MICROFICHE INDEX

Microfiche 1/14 Presentation - Identification

Presentation



Group 00 - General characteristics of the vehicle, identification, maintenance operations chart

PRESENTATION ..... P - A
DIMENSIONS, WHEEL ALIGNMENT ..... 00 - A
WEIGHTS AND LOADS, WHEELS (for 33 models) ..... 00 - B
WEIGHTS AND LOADS, WHEELS (for SW models) ..... 00 - C
VEHICLE IDENTIFICATION AND SERVICE DATA (for 33 models), MODEL IDENTIFICATION (for 33 models) ..... 00 - D
VEHICLE IDENTIFICATION AND SERVICE DATA (for SW models), MODEL IDENTIFICATION (for SW models) ..... 00 - E
JACKING AND TOWING POINTS, PROGRAMMED MAINTENANCE, FLUIDS AND LUBRICANTS, APPROXIMATE REFILL CAPACITIES ..... 00 - F

GENERAL INDEX

Microfiche 1/14 Presentation - Identification

Presentation



Group 00 - General characteristics of the vehicle, identification, maintenance operations chart

PRESENTATION ..... P - A
DIMENSIONS, WHEEL ALIGNMENT ..... 00 - A
WEIGHTS AND LOADS, WHEELS (for 33 models) ..... 00 - B
WEIGHTS AND LOADS, WHEELS (for SW models) ..... 00 - C
VEHICLE IDENTIFICATION AND SERVICE DATA (for 33 models), MODEL IDENTIFICATION (for 33 models) ..... 00 - D
VEHICLE IDENTIFICATION AND SERVICE DATA (for SW models), MODEL IDENTIFICATION (for SW models) ..... 00 - E
JACKING AND TOWING POINTS, PROGRAMMED MAINTENANCE, FLUIDS AND LUBRICANTS, APPROXIMATE REFILL CAPACITIES ..... 00 - F

GENERAL INDEX

Microfiche 2/14 Group 00 Maintenance



Group 00 - Maintenance

TWIN-CARBURETTOR ENGINES
ENGINE MAINTENANCE, FUEL SYSTEM, IGNITION ..... 00 - A
ENGINE MAINTENANCE, FUEL SYSTEM, IGNITION (continued), COOLING MAINTENANCE ..... 00 - B
MAINTENANCE OF MECHANICAL GROUPS ..... 00 - C
TCS, SPECIFIC TOOLS ..... 00 - D

ENGINES WITH ELECTRONIC IGNITION (8 VALVES) (LE3-Jetronic)
ENGINE MAINTENANCE, FUEL SYSTEM, IGNITION ..... 00 - E
ENGINE MAINTENANCE, FUEL SYSTEM, IGNITION (continued) ..... 00 - F
COOLING MAINTENANCE, MAINTENANCE OF MECHANICAL GROUPS ..... 00 - G
TCS, SPECIFIC TOOLS ..... 00 - H

ENGINE WITH ELECTRONIC INJECTION (16 VALVES)
ENGINE MAINTENANCE, FUEL SYSTEM, IGNITION ..... 00 - I
ENGINE MAINTENANCE, FUEL SYSTEM, IGNITION (continued), COOLING MAINTENANCE ..... 00 - L
MAINTENANCE OF MECHANICAL GROUPS ..... 00 - M
TCS, SPECIFIC TOOLS ..... 00 - N

TURBODIESEL ENGINE
ENGINE MAINTENANCE SUPPLY ..... 00 - O
COOLING MAINTENANCE, MAINTENANCE OF MECHANICAL GROUPS ..... 00 - P
TCS, SPECIFIC TOOLS ..... 00 - Q

IV

GENERAL INDEX

Microfiche 3/14

Group 01 - Twin carburettor engines

ENGINE - POWER TRAIN REMOVAL ..... 01 - A
ENGINE - POWER TRAIN REMOVAL (continued), ENGINE - POWER TRAIN INSTALLATION, SEPARATION AND RECONNECTION OF ENGINE FROM/TO GEARBOX-DIFFERENTIAL ..... 01 - B
ENGINE, ENGINE DISMANTLING ..... 01 - C
ENGINE DISMANTLING (Continued), CYLINDER HEADS ..... 01 - D
INSPECTION AND CHECKS ..... 01 - E
INSPECTION AND CHECKS (Continued) ..... 01 - F
ENGINE REASSEMBLY ..... 01 - G
ENGINE REASSEMBLY (Continued) ..... 01 - H
ENGINE REASSEMBLY (Continued) ..... 01 - I
LUBRICATION CIRCUIT ..... 01 - L
TDS ..... 01 - M
TDS (Continued), SPECIAL TOOLS ..... 01 - N

V

GENERAL INDEX

Microfiche 4/14

Group 01 - Engine with electronic injection (8 valves) (LE3 - Jetronic)

ENGINE UNIT REMOVAL....01 - A
ENGINE UNIT REMOVAL (Continued), ENGINE UNIT INSTALLATION....01 - B
ENGINE UNIT INSTALLATION (Continued), ENGINE ASSEMBLY AND DISASSEMBLY FROM THE GEARBOX-DIFFERENTIAL UNIT, ENGINE, ENGINE DISASSEMBLY....01 - C
ENGINE DISASSEMBLY (Continued), CYLINDER HEAD DISASSEMBLY....01 - D
CHECKS AND INSPECTIONS....01 - E
CHECKS AND INSPECTIONS (Continued)....01 - F
CYLINDER HEAD REASSEMBLY, ENGINE REASSEMBLY....01 - G
ENGINE REASSEMBLY (Continued)....01 - H
TCS....01 - I
TCS (Continued)....01 - L
TCS (Continued), SPECIFIC TOOLS....01 - M
TCS (For 1.4 IE Greece)....01 - N
TCS (For 1.4 IE Greece) (continued), SPECIFIC TOOLS (For 1.4 IE Greece)....01 - O

VI

GENERAL INDEX

Microfiche 5/14

Group 01 - Electronic - Injection engine (16 valves)

ENGINE - TRANSMISSION UNIT, REMOVAL AND REPLACEMENT ..... 01 - A

ENGINE - TRANSMISSION UNIT, REMOVAL AND REPLACEMENT (continued), ENGINE/GEARBOX - DIFFERENTIAL. SEPARATION AND UNION ..... 01 - B

PRELIMINARY DISMANTLING OPERATIONS, ENGINE DISMANTLING AND REASSEMBLY ..... 01 - C

ENGINE DISMANTLING AND REASSEMBLY (continued), CYLINDER HEAD OVERHAUL ..... 01 - D

BLOCK CHECKS ..... 01 - E

ENGINE REASSEMBLY ..... 01 - F

ENGINE REASSEMBLY (continued), REMOVING AND REFITTING CYLINDER HEAD WITH ENGINE ON VEHICLE ..... 01 - G

REMOVING AND REFITTING CYLINDER HEADS WITH ENGINE ON VEHICLE (continued), FLOWTESTING ..... 01 - H

TSN ..... 01 - I

TSN (continued), SPECIAL TOOLS ..... 01 - L

VII

GENERAL INDEX

Microfiche 6/14

Group 01 - Turbodiesel engine

DESCRIPTION, LUBRICATING CIRCUIT, ENGINE UNIT REMOVAL AND INSTALLATION ..... 01 - A
ENGINE UNIT REMOVAL AND INSTALLATION (Continued), ENGINE DISASSEMBLY AND ASSEMBLY FROM THE GEARBOX/DIFFERENTIAL UNIT ..... 01 - B
ENGINE, ENGINE DISASSEMBLY ..... 01 - C
ENGINE DISASSEMBLY (Continued), CYLINDER HEADS ..... 01 - D
CHECKS AND INSPECTIONS ..... 01 - E
CHECKS AND INSPECTIONS (Continued) ..... 01 - F
CHECKS AND INSPECTIONS (Continued) ..... 01 - G
ENGINE UNIT RE-ASSEMBLY ..... 01 - H
ENGINE UNIT REASSEMBLY (Continued) ..... 01 - I
ENGINE UNIT REASSEMBLY (Continued) ..... 01 - L
TSN ..... 01 - M
TSN (continued), SPECIAL TOOLS ..... 01 - N

VIII

GENERAL INDEX

Microfiche 7/14 Groups: 04-05-07 (Petrol engines IE 8V/LE3 - Jetronic)



Group 04 - Fuel supply system

TWIN CARBURETTOR ENGINE
FUEL SUPPLY SYSTEM, AIR FILTER
AIR MIXER ..... 04 - A
CARBURETTORS, ACCELERATOR CONTROL
ADJUSTMENT ..... 04 - B
FUEL SUPPLY SYSTEM,
EXHAUST SYSTEM ..... 04 - C
TDS, SPECIAL TOOLS ..... 04 - D
8 VALVE ELECTRONIC INJECTION ENGINE
(LE3 - Jetronic)
INJECTION SYSTEM WIRING, AIR
FILTER, AIR FLOW METER, ADDITIONAL
AIR SOLENOID VALVE,
THROTTLE VALVE BODY, SUPPLY MANIFOLD ..... 04 - E
FUEL SUPPLY
CIRCUIT ..... 04 - F
FUEL VAPOUR EMISSION CONTROL
SYSTEM, CHECKS AND
ADJUSTMENTS ..... 04 - G
CHECKS AND ADJUSTMENTS (Continued),
ELECTRIC/ ELECTRONIC COMPONENTS ..... 04 - H
EXHAUST SYSTEM ..... 04 - I
TDS, SPECIAL TOOLS ..... 04 - L



Group 05 - Ignition, charging system

TWIN CARBURETTOR ENGINE
IGNITION, CHARGING SYSTEM, TDS ..... 05 - M
8 VALVE ELECTRONIC INJECTION ENGINE
(LE3 - Jetronic)
IGNITION, CHARGING SYSTEM, TDS ..... 05 - N



Group 07 - Engine cooling system

TWIN CARBURETTOR ENGINE
COOLING SYSTEM, TDS ..... 07 - O
8 VALVE ELECTRONIC INJECTION ENGINE
(LE3 - Jetronic)
COOLING SYSTEM, TDS ..... 07 - P

GENERAL INDEX

Microfiche 8/14 Groups: 04-05-07 (IE 16V - TURBODIESEL)



Group 04 - Fuel supply system

16 VALVE ELECTRONIC INJECTION ENGINE
INJECTION SYSTEM WIRING, AIR SUPPLY SYSTEM ..... 04 - A
FUEL SUPPLY CIRCUIT ..... 04 - B
FUEL VAPOUR EMISSION CONTROL SYSTEM ..... 04 - C
CHECKS AND ADJUSTMENTS ..... 04 - D
ELECTRIC/ELECTRONIC COMPONENTS, EXHAUST SYSTEM ..... 04 - E
TCS, SPECIFIC TOOLS ..... 04 - F
TURBODIESEL ENGINE
FUEL SUPPLY CIRCUIT SUPERCHARGING SYSTEM ..... 04 - G
AIR FILTER, FUEL SUPPLY SYSTEM ..... 04 - H
FUEL SUPPLY SYSTEM (Continued) ..... 04 - I
FUEL SUPPLY SYSTEM (Continued) ..... 04 - L
CALIBRATIONS AND ADJUSTMENTS, EXHAUST SYSTEM ..... 04 - M
TCS, SPECIFIC TOOLS ..... 04 - N



Group 05 - Starting, charging system

16 VALVE ELECTRONIC INJECTION ENGINE
STARTING, CHARGING SYSTEM, TCS ..... 05 - O
TURBODIESEL ENGINE
STARTING, CHARGING SYSTEM, TCS ..... 05 - P



Group 07 - Engine cooling system

16 VALVE ELECTRONIC INJECTION ENGINE
COOLING CIRCUIT, TCS ..... 07 - Q
TURBODIESEL ENGINE
COOLING CIRCUIT, TCS ..... 07 - R

X

GENERAL INDEX

Microfiche 9/14 Groups: 12-13-15-17



Group 12 - Clutch

CLUTCH ACTUATOR SYSTEM, HYDRAULIC SYSTEM SUBASSEMBLY.....12 - A
CLUTCH SUBASSEMBLY, TSN, SPECIAL TOOLS.....12 - B



Group 13 - Gearbox

GEARBOX, REMOVAL AND REPLACEMENT (for petrol models).....13 - C
REMOVAL AND REPLACEMENT (for turbodiesel models).....13 - D
RODS AND FORKS.....13 - E
SHAFTS AND GEARING.....13 - F
SHAFTS AND GEARING (continued), ADJUSTMENTS.....13 - G
EXTERNAL GEAR SELECTOR LINKAGE.....13 - H
ELECTROMAGNETIC COUPLING.....13 - I
ELECTROMAGNETIC COUPLING (continued), TSN.....13 - L
SPECIAL TOOLS.....13 - M



Group 15 - Transmission

PROPELLOR SHAFT, (For selectable 4x4), TSN, SPECIAL TOOLS.....15 - N



Group 17 - Differential and driveshafts

DIFFERENTIAL BEARINGS, DIFFERENTIAL CASING.....17 - O
DRIVE SHAFTS.....17 - P
REAR DIFFERENTIAL.....17 - Q
REAR DIFFERENTIAL (continued).....17 - R
HALF-SHAFTS.....17 - S
TSN, SPECIAL TOOLS.....17 - T

GENERAL INDEX

Microfiche 10/14 Groups: 21-22-23-25-28



Group 21 - Front suspension

FRONT SUSPENSION, WHEEL HUB FRONT ..... 21 - A
COIL SPRING AND SHOCK ABSORBERS, STRUT AND TRANSVERSE ARM ..... 21 - B
FRONT WHEEL ALIGNMENT, WHEEL ALIGNMENT ANGLES, TSN, SPECIAL TOOLS ..... 21 - C



Group 22 - Front and rear brakes

BRAKING SYSTEM, PEDAL UNIT, BRAKE MASTER CYLINDER ..... 22 - D
BRAKE PIPE SYSTEM, BRAKING CORRECTOR, BRAKE SERVO, VACUUM SYSTEM ..... 22 - E
FRONT DISC BRAKES (ATE CALIPERS) ..... 22 - F
REAR DRUM BRAKES, HAND-BRAKE ..... 22 - G
REAR DISK BRAKES (MODELS WITH A.B.S.) ..... 22 - H
ANTI-LOCK BRAKING SYSTEM (A.B.S.), CHECKING LEVEL OF THE BRAKE/CLUTCH FLUID, REPLACING BRAKE FLUID, BLEEDING AIR FROM THE BRAKE SYSTEM ..... 22 - I
TSN, SPECIAL TOOLS ..... 22 - L



Group 23 - Steering

STEERING WHEEL AND COLUMN, STEERING LINKAGE ..... 23 - M
STEERING RACK ..... 23 - N
POWER STEERING RACK UNIT ..... 23 - O
POWER STEERING RACK UNIT (For 33 TD Intercooler and SW TD Intercooler versions), TSN, SPECIAL TOOLS ..... 23 - P



Group 25 - Rear suspension

REAR SUSPENSION, REAR WHEEL ALIGNMENT, REAR WHEEL CAMBER AND TOE-OUT (For 4x2 versions) ..... 25 - Q
REAR SUSPENSION, REAR WHEEL ALIGNMENT, REAR WHEEL CAMBER AND TOE-OUT (For 4x4 versions) ..... 25 - R
REAR WHEEL HUBS, TSN, SPECIAL TOOLS ..... 25 - S



Group 28 - Wheels and tires

TYRES, TSN ..... 28 - T

GENERAL INDEX

Microfiche 1 1/14 Groups: 40-43



Group 40 - Electrical system

RULES AND PRECAUTIONS, FUSES..... 40 - A
FUSES (Continued), ELECTROMECHANICAL
DEVICES AND INTERMITTENCES ..... 40 - B
ELECTROMECHANICAL DEVICES AND
INTERMITTENCES (Continued), LIGHTING
SYSTEM..... 40 - C
EXTERNAL LIGHTING..... 40 - D
EXTERNAL LIGHTING (Continued),
INTERNAL LIGHTING..... 40 - E
SENSORS AND SENDERS..... 40 - F
SENSORS AND SENDERS (Continued)..... 40 - G
SENSORS AND SENDERS (Continued)..... 40 - H
WINDSCREEN WASHERS/WIPERS -
HEADLIGHT WASHERS,
REAR WINDSCREEN WASHER-WIPERS, ELECTRICAL
ACCESSORIES..... 40 - I
ELECTRICAL ACCESSORIES (Continued),
SWITCHES..... 40 - L



Group 43 - Cluster and electronic instruments

RULES AND PRECAUTIONS, INSTRUMENT PANEL..... 43 - M
CONTROL UNITS..... 43 - N

GENERAL INDEX

Microfiche 12/14 Groups: 49-55-56



Group 49 - Body-whole plate parts

GENERAL INFORMATION, BODY COMPONENT PARTS, BODY STRUCTURE ..... 49 · A
BODY SEALING, FOAM INSULATION, BODY ALIGNMENT ..... 49 · B
STANDARDS AND PRECAUTIONS ..... 49 · C
REPLACEMENTS ..... 49 · D
REPLACEMENTS (Continued) ..... 49 · E
REPLACEMENTS (Continued) ..... 49 · F
REPLACEMENTS (Continued) ..... 49 · G
REPLACEMENTS (Continued) ..... 49 · H



Group 55 - Doors

FRONT DOORS ..... 55 · I
REAR DOORS ..... 55 · L



Group 56 - Front and rear hoods

FRONT HOOD ..... 56 · M
LIFTGATE, SPOILER (For 33 models) ..... 56 · N
LIFTGATE, SPOILER (For Sport Wagon models) ..... 56 · O

GENERAL INDEX

Microfiche 13/14 Groups: 66-75-80



Group 66 - Internal trimming

INTERNAL UPHOLSTERING ..... 66 - A
FRONT SEATS, REAR SEATS,
REAR CONSOLE ..... 66 - B
CENTRAL CONSOLE - GEAR SHIFT LEVER ..... 66 - C
DASHBOARD, REAR SAFETY
BELTS, TSN ..... 66 - D



Group 75 - External trim

BUMPER, RADIATOR GRILLE
AIR INTAKE GRILLE ..... 75 - E
WINDSHIELD, REAR WINDOW ..... 75 - F
UNDER-DOOR SKIRT, SIDE BAND, FENDER PANEL,
SUNROOF ..... 75 - G
SUNROOF (Continued), TSN ..... 75 - H



Group 80 - Air conditioning

AIR CONDITIONING (Premodification) ..... 80 - I
HEATER (Premodification) ..... 80 - L
CONDITIONER (Premodification) ..... 80 - M
CONDITIONER (Premodification) (Continued) ..... 80 - N
HEATING-VENTILATION (Postmodification) ..... 80 - O
HEATING-VENTILATION (Postmodification)
(Continued) ..... 80 - P
HEATING-VENTILATION (Postmodification)
(Continued) ..... 80 - Q
HEATING-VENTILATION (Postmodification)
(Continued) ..... 80 - R
TSN, SPECIAL SERVICE TOOLS ..... 80 - S

GENERAL INDEX Groups: 04-15-17 (Permanent 4) 00-01-04-05 (IE 8V - IAW)

Microfiche 14/14



Group 04 - Fuel supply system

EXHAUST SYSTEM.....04 - A



Group 15 - Transmission

WARNING, TRANSMISSION.....15 - B
DRIVE SHAFT, TCS,
SPECIFIC TOOLS.....15 - C



Group 17 - Differential and drive shafts

DRIVE HALF-SHAFTS, SPECIFIC TOOLS.....17 - D



Group 00 - Complete car

WARNING, VIEW OF ENGINE COMPARTMENT,
ENGINE MAINTENANCE.....00 - E



Group 01 - Engine complete unit

TCS.....01 - F



Group 04 - Fuel supply system

IAW IGNITION - INJECTION SYSTEM.....04 - G
IAW IGNITION - INJECTION SYSTEM (Continued).....04 - H
IAW IGNITION - INJECTION SYSTEM (Continued),
FUEL SUPPLY SYSTEM.....04 - I
AIR SUPPLY SYSTEM.....04 - L
FUEL VAPOUR EMISSION CONTROL
SYSTEM.....04 - M
EXHAUST SYSTEM, ELECTRICAL AND ELECTRONIC
COMPONENTS.....04 - N



Group 05 - Starting, charging system

WARNING, IGNITION
COILS.....05 - O

SYMBOLS

	Tighten to torque		Assembly Composition		Rotation
	Tighten to torque plus angle		Seal Seal		Rotating torque
	Peen over nut		Flatness		Angle Angular value
	Set-up Adjustment		Diameter		Compression ratio
	Visual inspection Check		Linear dimension		Class Selection
	Important note		Parallelism		Oversize Larger than... Maximum Undersize Smaller than Minimum
	Lubricate Wet		Refill with engine oil		Number of turns
	Removal Disconnection		Grease		Ratios
	Replacement Connect		Tollerance Weight difference		Intake
	Dismantling Dis-assembly		Pre-load		Exhaust

SYMBOLS (Continued)

	Tighten right down
	Lubricate with engine oil
	Tightening torque in oil
	Engine idling speed
	Ovality
	Taper
	Eccentricity
	Force fit Interference
	Dimension to measure Measurement - Against - Thickness - Play
	Substitution Original spares

	Brake system bleed
	Pressure
	Temperature
	MIG welding
	Grinding
	Pneumatic chisel
	Pneumatic saw
	Seal cutter
	Spot welder
	Spot de-welder

	Drill

SYMBOLS (Continued)

WARNING:

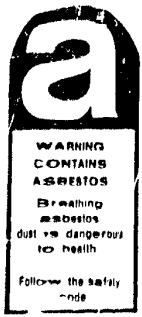

ASBESTOS

Certain parts fitted to this vehicle, such as brakepads, clutch disk and gaskets fro high temperature joints, may contain **asbestos.**

Asbestos dust endangers health if breathed.

When operations or machining must be performed on these parts, the following precautions must be observed:

- Work in a well-ventilated area or in the open.
- Asbestos dust created during operations must be eliminated with an extractor system, and **not** by blowing or sweeping.
- The dust residue must be wetted, placed in a sealed container and marked to ensure safe disposal.
- When the above-mentioned components must be cut, drilled or machines, they should be wetted beforehand; tools used should be manual or with low-speed motors.

XIX

SERVICE

ASSISTENZA TECNICA

DIVISIONE ALFA ROMEO - 20020 Arese (MI)
Viale Alfa Romeo
Fiat Auto S.p.A.

Publication MF 330003GB0000
9/91 - 600

All rights reserved. Reproduction, even
partial is strictly prohibited without
prior written authorization from Fiat Auto S.p.A.

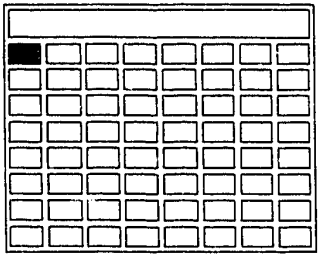

PA085C101

PRESENTATION

INTRODUCTION ..... P - 1

MANUAL LAYOUT ..... P - 2

HOW TO USE THE MANUAL ..... P - 3

- MICROFICHE HEADERS ..... P - 3
- INDEXES ..... P - 4
- SYMBOLS ..... P - 7

CHART LAYOUT ..... P - 8

- HEADER ..... P - 8
- FIGURE AND TEXT ..... P - 9
- REFERENCES ..... P - 10
- REFERENCES CONTINUED ..... P - 11

INTRODUCTION

This Manual is for workshops belonging to the ALFA ROMEO Service Oranization, it contains instructions for the tuning, repair and overhaul of ALFA 33 and Sport Wagon models.

Unless oterwise indicated, all information in this manual applies to both 33 and Sport Wagon models.

The operations are described in step-by-step form and are backed up by illustrations aimed to help identify components immediately; a detailed series of indexes and references allows the subject desired to be found with ease.

All the information, figures and technical specifications inthis manual are revised and correct at the time of publication.

Subsequent variations to technical specifications and characteristic features introduced between editions of the manual will be published in the "Technical Bulletins" issued by theTechnical Assistance Service when the modifications are put into practise.

The manufacturers reserve the right at any time and without notification to make ay changes considered necessary to improve or satisfy manufacturing or commercial requirements, andfurthermore state that not all models covered by this manualmay necessarily be available on all markets.

MANUAL LAYOUT

This manual is composed of microfiches, and as for previous manuals, is divided into functional groups.

Each group consists of operating procedures and technical data.

Unless otherwise indicated, removal and dismantling procedures can be carried out in reverse order when replacing or re-assembling.

The procedures described in this manual generally cover complete dismantling, which should only be carried out in cases where it is strictly necessary.

Apart from instructing procedures, this manual also providesinformative descriptions and data on operation for each group or subject of technical importance.

In particular it must be remembered that gaskets, o-rings and copper washers fitted to joints should always be replaced with new equivalents and never re-used.

The procedures and the paragraphs covering Technical Specifications and Notes include descriptions on the use of

SPECIAL TOOLS**produced to ensure quick, precise and safe repairs to be carried out.** The symbols used are shown in the first column of each microfiche, after the indexes.

Units or parts must only be substituted with original spares: only in this way can perfect interchangability and operation of assemblies be ensured.

HOW TO USE THE MANUAL

MICROFICHE HEADERS

Each of the microfiches forming the manual has a header showing the units or descriptions it covers.

In this way the microfiche covering the topic desired can be selected from the start.

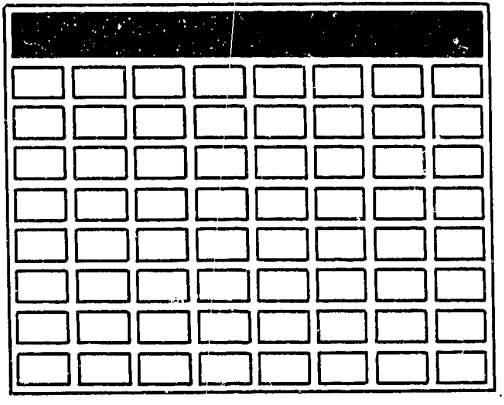

PA089C101

INDEXES

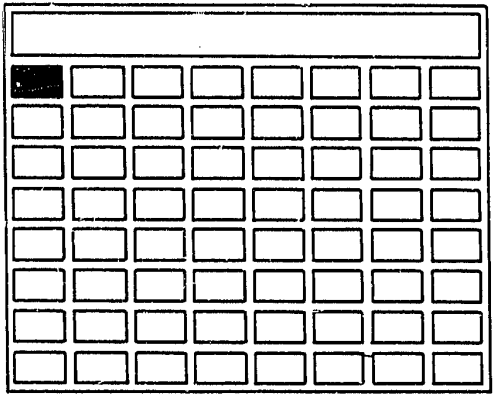

PA090C101

In order to make full use of this manual it is essential to look up the subject desired using the indexes, which are divided up as follows:

– Microfiche index.

This is the first chart in each microfiche, which shows its contents and refers to the various column indexes on the top line.

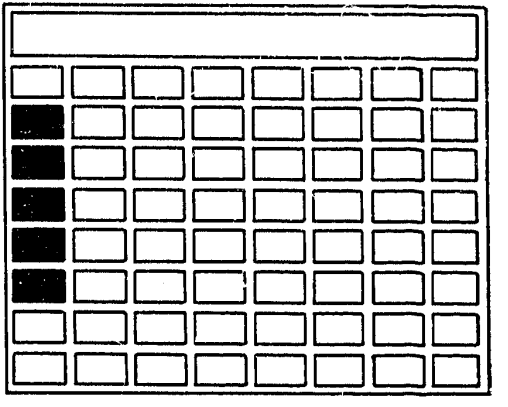

PA0911C101

- **Manual general index.**

This follows the Microfiche index in the first column, and shows the contents of all the microfiches in the manual.

References from one microfiche to another are thus made easier.

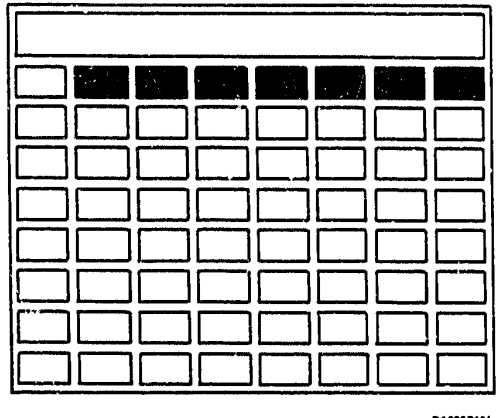

– **Column index.**

Tis is the first chart in each column and shows the detailed index of subjects the column contains.

To find the topic desired read the column indexes until the correct column is identified, then read down the column until the desired chart or charts is/are found.

PA092C101

SYMBOLS

To make it simpler to consult the manual, special symbols have been used which are easily read and understood.
The first column of each microfiche, after the indexes, shows the list of symbols used and their meaning.

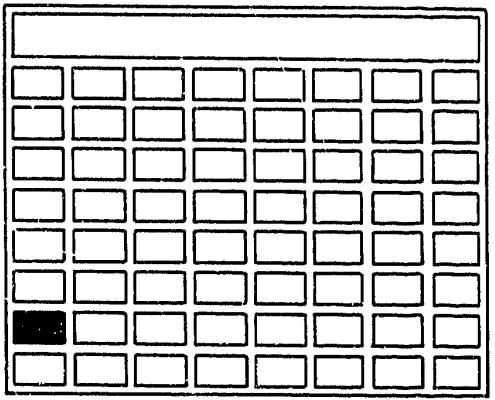

PA093C101

CHART LAYOUT
HEADERS

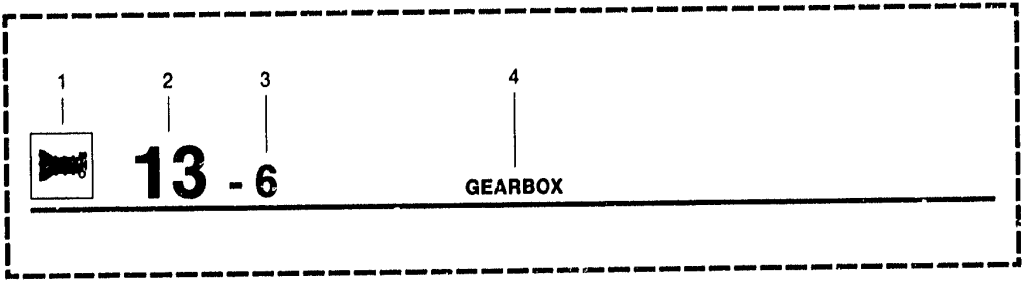

1. Functional unit symbol
2. Functional unit number
3. Chart serial number
4. Functional unit name

FIGURE AND TEXT

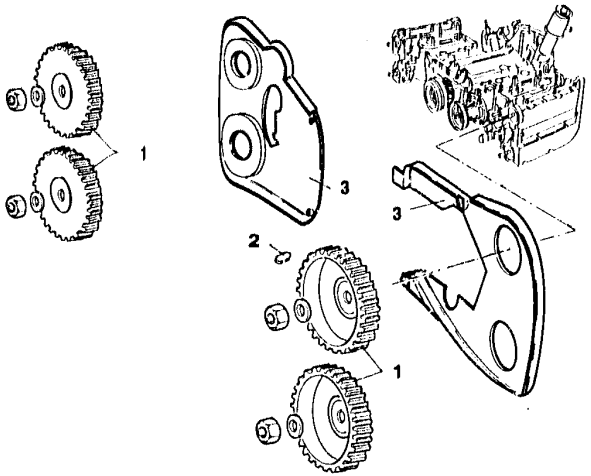

1. Unscrew the securing nuts and remove the right and left hand drive sprockets from the camshafts.
2. Recover the four keys.
3. Remove the rear guards.

The reference numbers in the figure follow the order of the text sequence. Other references such as tightening torques and lubricants will be treated in the replacement or re-assembly sequence.

REFERENCES

- Adjust the power-steering pump drive belt (see table 00-95)
- Fit the alternator drive belt and adjust its tension. (see table 00-91)

– References within the same unit

The table of reference is indicated directly.

Wit the vehicle raised make sure it is positioned using suitable safety stands. For identifing support points see "Jacking Points". **GR 00**

– References between units.

The unit of reference is indicated. The indexes of that unit must be read to find the subject desired.

REFERENCES CONTINUED

. Withdraw pistons from the head side of the block complete with their connecting rods.
Remove the bearings from the big-end and cap.

- Determination of pre-load for taper roller bearings 13-45
- Power take-off shaft 13-49

REAR DIFFERENTIAL
(CONTINUED)

When a subject can not be contained in a single chart or a single column an arrow is shown to indicate that the subject starts in one chart and continues in the next.

For procedure pages, the arrow points to the right indicating that the subject continues in the next column.

For clarity, the subject title is repeated with "(continued)" in the column where the subject continues.

33 - Sport Wagon (SW)

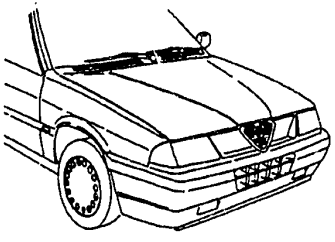

- DIMENSIONS
- WHEEL ALIGNMENT

DIMENSIONS
SPECIFIC FOR 33 MODELS .....00 - 1
DIMENSIONS
SPECIFIC FOR SW MODELS.....00 - 3
WHEEL ALIGNMENT
SPECIFIC FOR 33 - SW MODELS .....00 - 5

DIMENSIONS

SPECIFIC FOR 33 MODELS

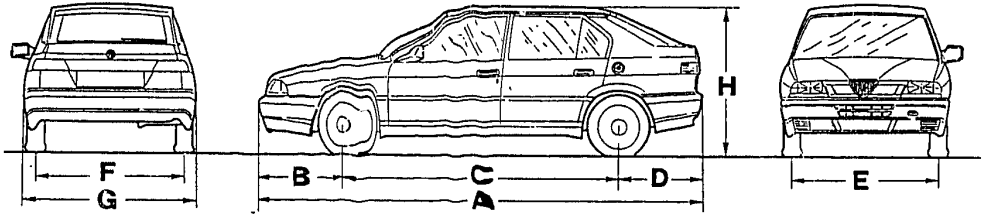

Dimensions \ Versions	1.2	1.3 1.3 W	1.3 VL	1.5	1.3 IE (*) 1.3 IE L (*)	1.4 IE (*) 1.4 IE L (*) 1.4 IE	1.5 IE	1.7 IE
A	4.075	4.075	4.075	4.075	4.075	4.075	4.075	4.075
B	829	829	829	829	830	830	829	829
C	2.475	2.475	2.475	2.475	2.475	2.475	2.475	2.475
D	771	771	771	771	770	770	771	771
E	1.366	1.366	1.366	1.366	1.366	1.366	1.366	1.366
F	1.365	1.365	1.365	1.365	1.365	1.365	1.365	1.365
G	1.614	1.614	1.614	1.614	1.614	1.614	1.614	1.614
H	1.348	1.348	1.348	1.350	1.350	1.350	1.350	1.350

(*) I.A.W. INJECTION-IGNITION SYSTEM

DIMENSIONS

SPECIFIC FOR 33 MODELS

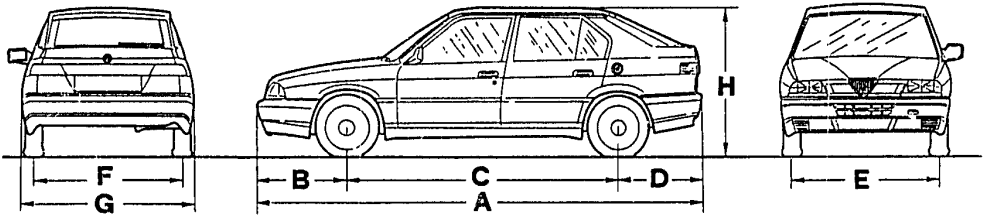

Versions / Dimensions	S 1.7 IE	1.7 IE 4x4	- BOXER 16V - 16V	- BOXER 16V⊕ - S 16V⊕	S 16V⊕ Permanent 4	1.8 TDI	
A	4.075	4.075	4.075	4.075	4.075	4.075	
B	829	829	829	829	830	837	
C	2.475	2.470	2.475	2.475	2.470	2.468	
D	771	771	771	771	775	770	
E	1.366	1.366	1.366	1.366	1.366	1.394,5	
F	1.365	1.385	1.365	1.369	1.385	1.365	
G	1.614	1.614	1.614	1.614	1.614	1.614	
H	1.350	1.375	1.350	1.350	1.375	1.350	

DIMENSIONS

SPECIFIC FOR SW MODELS

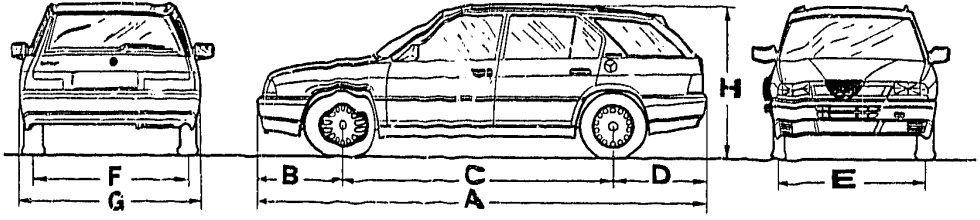

Versions / Dimensions	1.3 1.3 L	1.3 4x4	1.3 IE (*) 1.4 IE (*) 1.3 IE L (*) 1.4 IE L (*)	1.3 IE 4x4 (*) 1.4 IE 4x4 (*)	1.5 IE
A	4.200	4.200	4.200	4.200	4.200
B	829	829	830	830	829
C	2.475	2.470	2.475	2.470	2.475
D	896	901	895	900	896
E	1.366	1.366	1.366	1.366	1.366
F	1.365	1.385	1.365	1.385	1.365
G	1.614	1.614	1.614	1.614	1.614
H	1.350	1.375	1.350	1.376	1.350

(*) I.A.W. INJECTION-IGNITION SYSTEM

DIMENSIONS

SPECIFIC FOR SW MODELS

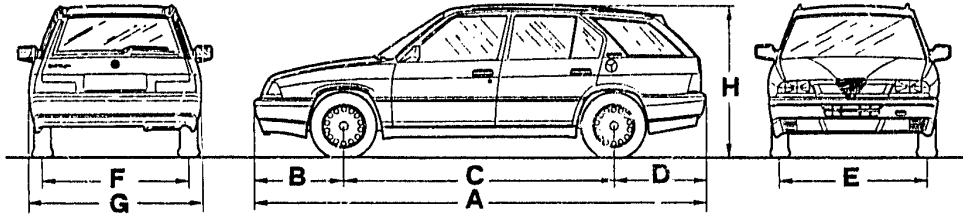

Dimensions \ Versions	15 IE 4x4	1.7 IE	1.7 IE 4x4	B 16V 16V	1.8 TDI
A	4.200	4.200	4.200	4.200	4.200
B	829	829	829	829	837
C	2.470	2.475	2.470	2.475	2.468
D	901	896	901	896	895
E	1.366	1.366	1.366	1.366	1.394
F	1.385	1.365	1.385	1.365	1.365
G	1.614	1.614	1.614	1.614	1.614
H	1.375	1.350	1.375	1.350	1.350

WHEEL ALIGNMENT

Unit: mm

Characteristics / Models	HEIGHT Front	HEIGHT Rear	CAMBER α	CAMBER Max. Diff. RH and LH	CASTER β	CASTER Max. Diff. RH and LH	STEERING LOCK External γ	STEERING LOCK Internal δ
33 - 33 1.3 V - 33 1.3 VL 33 1.5 - 33 1.3 IE (*) 33 1.4 IE (*) - 33 1.3 IE L (*) 33 1.4 IE L (*) - 33 1.4 IE 33 1.5 IE - 33 1.7 IE 33 S 1.7 IE - 33 Boxer 16V 33 16V - S.W. - S.W. 1.3 L S.W. 1.3 IE (*) - S.W. 1.4 IE (*) S.W. 1.3 IE L (*) S.W. 1.4 IE (*) S.W. 1.5 IE - S.W. 1.7 IE S.W. 8 16V S.W. 16V	-12^{+10}_{-5} -22^{+10}_{-5} (2)	0^{+10}_{-5}	1°14' ±30'	1°	+2° ± 30'	1°	27°50' 27°57' (1)	33°45' 33°29' (1)
33 1.7 IE 4x4 - S.W. 4x4 S.W. 1.3 IE 4x4 (*) S.W. 1.4 IE 4x4 (*) S.W. 1.5 IE 4x4 S.W. 1.7 IE 4x4	-12^{+10}_{-5} -22^{+10}_{-5} (2)	-2^{+10}_{-5}	1°14' ±30'	1°	+2° ± 30'	1°	27°50' 27°57' (1)	33°45' 33°29' (1)

(1) Specific for models with hydraulic steering (2) Starting from JUNE '91 (*) I.A.W. INJECTION-IGNITION SYSTEM

NOTE: For toe-out see group 21

⇩

WHEEL ALIGNMENT

Unit: mm

Characteristics / Models	HEIGHT		CAMBER		CASTER		STEERING LOCK	
	Front	Rear	α	Max. Diff. RH and LH	β	Max. Diff. RH and LH	External γ	Internal δ
33 Boxer 16V ⌀ 33 S 16V ⌀	-12^{+10}_{-5}	-10^{+10}_{-5}	-1°28' ± 30'	1°	+1°59'	1°	28°13'	33°58'
	-22^{+10}_{-5} (1)							
	-32^{+10}_{-5} (2)							
33 TD Intercooler S.W. TD Intercooler	-2^{+10}_{-5}	$+6^{+10}_{-5}$	-1°55' ± 30'	1°	+1° ± 30'	1°	27°55'	33°27'
33 S 16V ⌀ Permanent 4	-32^{+10}_{-5}	-2^{+10}_{-5}	-1°28' ± 30'	1°	1°59'	1°	28°13'	33°58'

(1) Starting from chassis N° 5630216
(2) Starting from February '91

NOTE: For toe-out see group 21

33

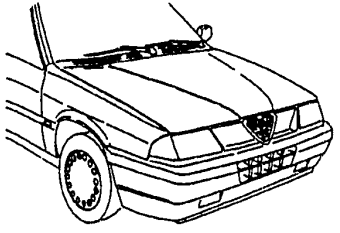

- WEIGHTS AND LOADS
- WHEELS

WEIGHTS AND LOADS
SPECIFIC FOR 33 MODELS ..... 00 - 7
WHEELS
SPECIFIC FOR 33 MODELS ..... 00 - 7

WEIGHTS AND LOADS
SPECIFIC FOR 33 MODELS

	1.2
Total allowable weight (kg) 	1.365
Kerb weight (kg) 	940
Load capacity (kg) 	425
Maximum axle load (kg) 	800
	800
Maximum towing weight (kg) 	1.000
Seating capacity 	2 + 3

WHEELS
SPECIFIC FOR 33 MODELS

	1.2
Wheel rims 	5 1/2 J x 13"
Tires 	165/70 R13 79T
Inflation pressures (kg/cm^2) (cold tires) (1) 	1,8
	1,8
Minimum steering lock "R" (mm) 	5.500

(1) For continuous high-speed driving increase tire pressures by 0,3 kg/cm^2 (0,3 bar - 30 kPa)

	1.3 - 1.3 V 1.3 VL
Total allowable weight (kg)	1.365
Kerb weight (kg)	940
Load capacity (kg)	425
Maximum axle load (kg)	800
	800
Maximum towing weight (kg)	1.000
Seating capacity	2 + 3

	1.3 - 1.3 V - 1.3 VL
Wheel rims	5 1/2 J x 13"
Tires	165/70 R13 79T
Inflation pressures (kg/cm^2) (cold tires) (1)	1,8
	1,8
Minimum steering lock "R" (mm)	5.500

(1) For continuous high-speed driving increase tire pressures by 0,3 kg/cm^2 (0,3 bar - 30 kPa)

	1.5
Total allowable weight (kg)	1.365
Kerb weight (kg)	940
Load capacity (kg)	425
Maximum axle load (kg)	800
	800
Maximum towing weight (kg)	1.000
Seating capacity	2 + 3

	1.5
Wheel rims	5 1/2 J x 13" 5 1/2 J x 14"
Tires	175/70 R13 82T 185/60 R14 82H
Inflation pressures (kg/cm^2) (cold tires) (1)	1,8
	1,8
Minimum steering lock "R" (mm)	5.500

(1) For continuous high-speed driving increase tire pressure by 0,3 kg/cm^2 (0,3 bar - 30 kPa)

	1.3 IE (*) - 1.4 IE (*) 1.3 IE L (*) - 1.4 IE L (*)
Total allowable weight (kg) 	1.395
Kerb weight (kg) 	970
Load capacity (kg) 	425
Maximum axle load (kg) 	800
	870
Maximum towing weight (kg) 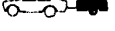	1.000
Seating capacity 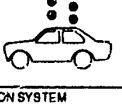	2 + 3

(*) I.A.W. INJECTION-IGNITION SYSTEM

	1.3 IE (*) - 1.4 IE (*) 1.3 IE L (*) - 1.4 IE L (*)
Wheel rims 	5 1/2 J x 13"
Tires 	165/70 R13 79T
Inflation pressures (kg/cm^2) (cold tires) (1) 	1,8
	1,8
Minimum steering lock "R" (mm) 	5.500

(1) For continuous high-speed driving increase tire pressures by 0,3 kg/cm^2 (0,3 bar - 30 kPa)

	1.4 IE
Total allowable weight (kg)	1.365
Korb weight (kg)	940
Load capacity (kg)	425
Maximum axle load (kg)	800
	800
Maximum towing weight (kg)	1.000
Seating capacity	2 + 3

	1.4 IE
Wheel rims	5 1/2 J x 13"
Tires	165/70 R13 79T
Inflation pressures (kg/cm^2) (cold tires) (1)	1,8
	1,8
Minimum steering lock "R" (mm)	5.500

(1) For continuous high-speed driving increase tire pressures by 0,3 kg/cm^2 (0,3 bar - 30 kPa)

	1.5 IE
Total allowable weight (kg)	1.395
Kerb weight (kg)	970
Load capacity (kg)	425
Maximum axle load (kg)	800
	800
Maximum towing weight (kg)	1.000
Seating capacity	2 + 3

	1.5 IE
Wheel rims	5 1/2 J x 13" 5 1/2 J x 14"
Tires	175/70 R13 82T 185/60 R14 82T
Inflation pressures (kg/cm^2) (cold tires) (1)	1,8
	1,8
Minimum steering lock (mm)	5.500

(1) For continuous high-speed driving increase tire pressures by 0,3 kg/cm^2 (0,3 bar - 30 kPa)

	1.7 IE
Total allowable weight (kg)	1.395
Kerb weight (kg)	970
Load capacity (kg)	425
Maximum axle load (kg)	800
	800
Maximum towing weight (kg)	1.000
Seating capacity	2 + 3

	1.7 IE
Wheel rims	5 1/2 J x 14"
Tires	185/60 R14 82H
Inflation pressures (kg/cm^2) (cold tires) (1)	2,0
	1,8
Minimum steering lock "R" (mm)	5.500

(1) For continuous high-speed driving increase tire pressures by 0,3 kg/cm² (0,3 bar - 30 kPa)

	S 1.7 IE
Total allowable weight (kg)	1.395
Kerb weight (kg)	970
Load capacity (kg)	425
Maximum axle load (kg)	800
	900
Maximum towing weight (kg)	1.000
Seating capacity	2 + 3

	S 1.7 IE
Wheel rims	5 1/2 J x 14"
Tires	185/60 R14 82H
Inflation pressures (kg/cm^2) (cold tires) (1)	2,0
	1,8
Minimum steering lock "R" (mm)	5.500

(1) For continuous high-speed driving increase tire pressures by 0,3 kg/cm^2 (0,3 bar - 30 kPa)

	1.7 IE 4x4
Total allowable weight (kg)	1.445
Kerb weight (kg)	1.020
Load capacity (kg)	425
Maximum axle load (kg)	800
	900
Maximum towing weight (kg)	1.100
Seating capacity	2 + 3

	1.7 IE 4x4
Wheel rims	5 1/2 J x 14"
Tires	185/60 R14 82H
Inflation pressures (kg/cm^2) (cold tires) (1)	2,0
	1,8
Minimum steering lock "R" (mm)	5.500

(1) For continuous high-speed driving increase tire pressures by 0,3 kg/cm^2 (0,3 bar - 30 kPa)

		- Boxer 16V - 16V - Boxer 16V🏁 - S 16V🏁
Total allowable weight (kg)		1.415
Kerb weight (kg)		1.000
Load capacity (kg)		425
Maximum axle load (kg)		800
		900
Maximum towing weight (kg)		1.100
Seating capacity		2 + 3

		Boxer 16V - 16V Boxer 16V🏁 - S 16V🏁
Wheel rims		5 1/2 J x 14"
Tires		185/60 R14 82H
Inflation pressures (kg/cm^2) (cold tires) (1)		2,0
		1,8
Minimum steering lock "R" (mm)		5.500

(1) For continuous high-speed driving increase tire pressures by 0,3 kg/cm^2 (0,3 bar - 30 kPa)

	S 16V Permanent 4
Total allowable weight (kg)	1.495
Kerb weight (kg)	1.070
Load capacity (kg)	425
Maximum axle load (kg)	800
	900
Maximum towing weight (kg)	1.100
Seating capacity	2 + 3

	S 16V Permanent 4	
Wheel rims	4B x 14" (2)	5 1/2 J x 14"
Tires	135/80 B14 (2)	185/60 R14 82H
Inflation pressures (kg/cm^2) (cold tires) (1)	-	2,0
	-	1,8
	2,8 (2)	-
Minimum steering lock "R" (mm)	5.500	

(1) For continuous high-speed driving increase tire pressures by 0,3 kg/cm^2 (0,3 bar - 30 kPa) (2) Values relative to spare wheel

	1.8 TDI
Total allowable weight (kg) 	1.465
Kerb weight (kg) 	1.040
Load capacity (kg) 	425
Maximum axle load (kg) 	800
	900
Maximum towing weight (kg) 	1.100
Seating capacity 	2 + 3

	1.8 TDI
Wheel rims 	5 1/2 J x 13"
Tires 	175/70 R13 82T
Inflation pressures (kg/cm^2) (cold tires) (1) 	2,2
	1,8
Minimum steering lock "R" (mm) 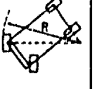	5.250

(1) For continuous high-speed driving increase tire pressures by 0,3 kg/cm^2 (0,3 bar - 30 kPa)

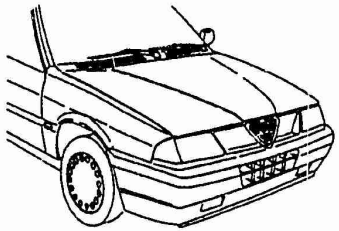

Sport Wagon

- WEIGHTS AND LOADS
- WHEELS

WEIGHTS AND LOADS
SPECIFIC FOR SW MODELS.....00 - 19
WHEELS
SPECIFIC FOR SW MODELS.....00 - 19

WEIGHTS AND LOADS
SPECIFIC FOR SW MODELS

	1.3 - 1.3L
Total allowable weight (kg) 	1.380
Kerb weight (kg) 	955
Load capacity (kg) 	425
Maximum axle load (kg) 	800
	900
Maximum towing weight (kg) 	1.000
Seating capacity 	2 + 3

WHEELS
SPECIFIC FOR SW MODELS

	1.3 - 1.3L
Whell rims 	5 1/2 J x 13"
Tires 	165/70 R13 79T
Inflation pressures (kg/cm^2) (cold tires) (1) 	2,2
	1,8 2,2 (2)
Minimum steering lock "R" (mm) 	5.500

(1) For continuous high-speed driving increase tire pressures by 0,3 kg/cm^2 (0,3 bar - 30 kPa) (2) For speeds above 160 kph

	1.3 4x4
Total allowable weight (kg)	1.430
Kerb weight (kg)	1.005
Load capacity (kg)	425
Maximum axle load (kg)	800
	800
Maximum towing weight (kg)	1.000
Seating capacity	2 + 3

	1.3 4x4
Whell rims	5 1/2 J x 13"
Tires	165/70 R13 82T
Inflation pressures (kg/cm^2) (cold tires) (1)	2,2
	1,8 2,2 (2)
Minimum steering lock "R" (mm)	5.500

(1) For continuous high-speed driving increase tire pressures by 0,3 kg/cm^2 (0,3 bar - 30 kPa) (2) For speeds above 160 kph

	1.3 IE (*) - 1.4 IE (*) 1.3 IE L (*) - 1.4 IE L (*)
Total allowable weight (kg)	1.410
Kerb weight (kg)	985
Load capacity (kg)	425
Maximum axle load (kg)	800
	870
Maximum towing weight (kg)	1.000
Seating capacity	2 + 3

(*) I.A.W. INJECTION-IGNITION SYSTEM

	1.3 IE (*) - 1.4 IE (*) 1.3 IE L (*) - 1.4 IE L (*)
Wheel rims	5 1/2 J x 13"
Tires	165/70 R13 79T
Inflation pressures (kg/cm^2) (cold tires) (1)	2,2
	1,8 2,2 (2)
Minimum steering lock "R" (mm)	5.500

(1) For continuous high-speed driving increase tire pressures by 0,3 kg/cm² (0,3 bar - 30 kPa) (2) For speeds above 160 kph

	1.3 IE 4x4 (*) 1.4 IE 4x4 (*)
Total allowable weight (kg)	1.450
Kerb weight (kg)	1.025
Load capacity (kg)	425
Maximum axle load (kg)	800
	870
Maximum towing weight (kg)	1.100
Seating capacity	2 + 3

(*) I.A.W. INJECTION-IGNITION SYSTEM

	1.3 IE 4x4 (*) - 1.4 IE 4x4 (*)
Wheel rims	5 1/2 J x 13"
Tires	165/70 R13 79T
Inflation pressures (kg/cm^2) (cold tires) (1)	2,2
	1,8 2,2 (2)
Minimum steering lock "R" (mm)	5.500

(1) For continuous high-speed driving increase tire pressures by 0,3 kg/cm^2 (0,3 bar - 30 kPa) (2) For speeds above 160 kph

	1.5 IE
Total allowable weight (kg) 	1.410
Kerb weight (kg) 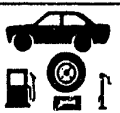	985
Load capacity (kg) 	425
Maximum axle load (kg) 	800
	900
Maximum towing weight (kg) 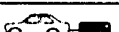	1.100
Seating capacity 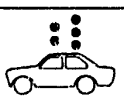	2 + 3

	1.5 IE
Wheel rims 	5 1/2 J x 13" 5 1/2 J x 14"
Tires 	175/70 R13 82T 185/60 R14 82H
Inflation pressures (kg/cm^2) (cold tires) (1) 	2,2
	1,8 2,2 (2)
Minimum steering lock "R" (mm) 	5.500

(1) For continuous high-speed driving increase tire pressures by 0,3 kg/cm^2 (0,3 bar - 30 kPa) (2) For speeds above 160 kph

	1.5 IE 4x4
Total allowable weight (kg)	1.460
Kerb weight (kg)	1.035
Load capacity (kg)	425
Maximum axle load (kg)	800
	900
Maximum towing weight (kg)	1.100
Seating capacity	2 + 3

	1.5 IE 4x4
Wheel rims	5 1/2 J x 13" 5 1/2 J x 14"
Tires	175/70 R13 82T 185/60 R14 82H
Inflation pressures (kg/cm^2) (cold tires) (1)	2,2
	1,8 2,2 (2)
Minimum steering lock "R" (mm)	5.250

(1) For continuous high-speed driving increase tire pressure by 0,3 kg/cm^2 (0,3 bar - 30 kPa) (2) For speeds above 160 kph

	1.7 IE
Total allowable weight (kg)	1.410
Kerb weight (kg)	985
Load capacity (kg)	425
Maximum axle load (kg)	800
	900
Maximum towing weight (kg)	1.100
Seating capacity	2 +3

		1.7 IE
Wheel rims		5 1/2 J x 14"
Tires		185/60 R14 82H
Inflation pressures (kg/cm^2) (cold tires) (1)		2,2
		1,8 2,2 (2)
Minimum steering lock "R" (mm)		5.500

(1) For continuous high-speed driving increase tire pressures by 0,1 kg/cm^2 (0,3 bar - 30 kPa) (2) For speeds above 160 kph

	1.7 IE 4x4
Total allowable weight (kg)	1.460
Kerb weight (kg)	1.035
Load capacity (kg)	425
Maximum axle load (kg)	800
	900
Maximum towing weight (kg)	1.100
Seating capacity	2 + 3

	1.7 IE 4x4
Wheel rims	5 1/2 J x 14"
Tires	185/60 R14 82H
Inflation pressures (kg/cm^2) (cold tires) (1)	2,2
	1,8 2,2 (2)
Minimum steering lock "R" (mm)	5.500

(1) For continuous high-speed driving increase tire pressures by 0,3 kg/cm^2 (0,3 bar - 30 kPa) (2) For speeds above 160 kph

	B 16V - 16V
Total allowable weight (kg)	1.440
Kerb weight (kg)	1.015
Load capacity (kg)	425
Maximum axle load (kg)	800
	900
Maximum towing weight (kg)	1.100
Seating capacity	2 + 3

	B 16V - 16V
Wheel rims	5 1/2 J x 14"
Tires	185/60 R14 82H
Inflation pressures (kg/cm^2) (cold tires) (1)	2,2
	1,8 2,2 (2)
Minimum steering lock "R" (mm)	5.500

(1) For continuous high-speed driving increase tire pressures by 0,3 kg/cm^2 (0,3 bar - 30 kPa) (2) For speeds above 160 kph

	1.8 TDI
Total allowable weight (kg) 	1.480
Kerb weight (kg) 	1.055
Load capacity (kg) 	425
Maximum axle load (kg) 	800
	900
Maximum towing weight (kg) 	1.100
Seating capacity 	2 + 3

	1.8 TDI
Wheel rims 	5 1/2 J x 13"
Tires 	175/70 R13 82T
Inflation pressures (kg/cm^2) (cold tires) (1) 	2,2
	1,8 2,2 (2)
Minimum steering lock "R" (mm) 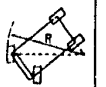	5.250

(1) For continuous high-speed driving increase tire pressures by 0,3 kg/cm^2 (0,3 bar - 30 kPa) (2) For speeds above 160 kph

33

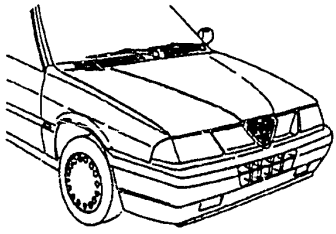

- VEHICLE IDENTIFICATION AND SERVICE DATA
- MODEL IDENTIFICATION

VEHICLE IDENTIFICATION AND SERVICE DATA
(SPECIFIC FOR 33 MODELS)
IDENTIFICATION PLATES ..... 00 - 29

MODEL IDENTIFICATION
(SPECIFIC FOR 33 MODELS)
IDENTIFICATION TABLE ..... 00 - 30
IDENTIFICATION PLATE ..... 00 - 34
BODY MARKINGS ..... 00 - 35
ENGINE MARKINGS ..... 00 - 35

VEHICLE IDENTIFICATION AND SERVICE DATA

SPECIFIC FOR 33 MODELS

IDENTIFICATION PLATES

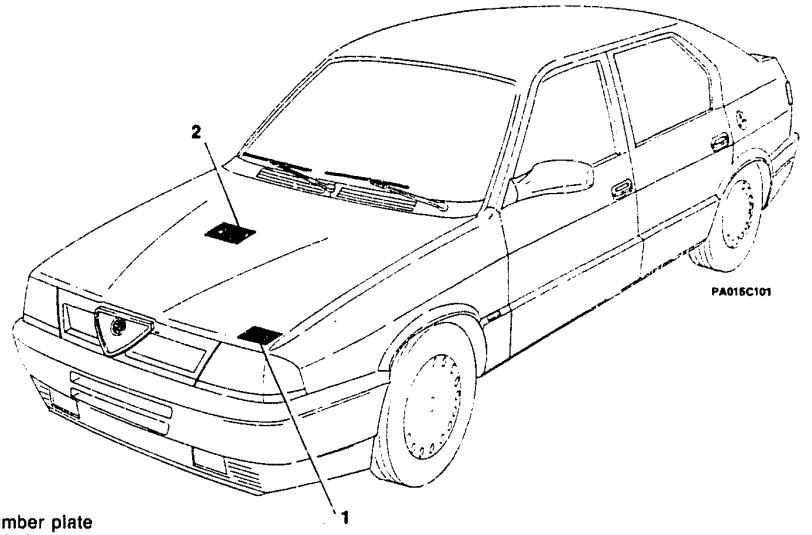

- Engine type and serial number plate
1. Identification and approval plate
2. Vehicle type and chassis serial number plate

MODEL IDENTIFICATION

SPECIFIC FOR 33 MODELS

IDENTIFICATION TABLE

IDENTIFICATION \ VERSIONS		33		33 33 1.3 V		33 1.3 VL		33 1.5	
BODYSTYLE		5 door saloon							
DRIVE		LH	RH	LH	RH	LH	RH	LH	RH
VEHICLE TYPE NO.	ON IDENTIFICATION PLATE	907A4		907A3		907A3		907A2	
	ON AUXILIARY BAY CROSS MEMBER	907.000		907.000		907.000		907.000	
ENGINE TYPE AND SERIAL NUMBER		30743 from 000001		30732 from 000001		30732 from 000001		30734 from 000001	

IDENTIFICATION TABLE (Continued)

IDENTIFICATION \ VERSIONS		33 1.3 IE (*) - 33 1.4 IE (*) 33 1.3 IE L (*) - 33 1.4 IE L (*)		33 1.4 IE		33 1.5 IE		33 1.7 IE	
BODYSTYLE		5 door saloon							
DRIVE		LH	RH	LH	RH	LH	RH	LH	RH
VEHICLE TYPE NO.	ON IDENTIFICATION PLATE	907A3B ▲		907A3A ▲		907A2A		907A1	
						907A2B ▲		907A1A ▲	
	ON AUXILIARY BAY CROSS MEMBER	907.000		907.000		907.000		907.000	
ENGINE TYPE AND SERIAL NUMBER		30753 from 000001		30755 from 000001		30750 from 000001		30736 from 000001	
						30751 from 000001 ▲		30737 from 000001 ▲	

▲ Vehicle with catalytic converter
(*) I.A.W. INJECTION-IGNITION SYSTEM

IDENTIFICATION TABLE (Continued)

IDENTIFICATION \ VERSIONS		33 S 1.7 IE		33 1.7 IE 4x4		33 Boxer 16V 33 16V		33 Boxer 16V⊕ 33 S 16V⊕	
BODYSTYLE		5 door saloon							
DRIVE		LH	RH	LH	RH	LH	RH	LH	RH
VEHICLE TYPE NO.	ON IDENTIFICATION PLATE	907A1 907A1A ▲		907A1D 907A1E ▲		907A1B 907A1C ▲		907A1B 907A1C ▲	
	ON AUXILIARY BAY CROSS MEMBER	907.000		907.000		907.000		907.000	
ENGINE TYPE AND SERIAL NUMBER		30736 from 000001		30736 from 000001		30746 from 000001		30746 from 000001	
		30737 from 000001 ▲		30737 from 000001 ▲		30747 from 000001 ▲		30747 from 000001 ▲	

▲ Vehicle with catalytic converter

IDENTIFICATION TABLE (Continued)

IDENTIFICATION \ VERSIONS		33 S 16V Permanent 4		33 TD Intercooler					
BODYSTYLE		5 door saloon							
DRIVE		LH	RH	LH	RH				
VEHICLE TYPE NO.	ON IDENTIFICATION PLATE	907A1F 907A1G ▲		907A5					
	ON AUXILIARY BAY CROSS MEMBER	907.000		907.000					
ENGINE TYPE AND SERIAL NUMBER		30746 from 000001 30747 from 000001 ▲		VM96A from 000001					

▲ Vehicle with catalytic converter

IDENTIFICATION PLATE

1. Approval code
2. Body markings
3. Engine type number
4. Vehicle type and version
5. Serial number relating to units produced: this is a reference for spares ordering, identification of factory of manufacture or assembly and for introducing modifications.
6. Marking of correct smoke absorption coefficient value (only for diesels).

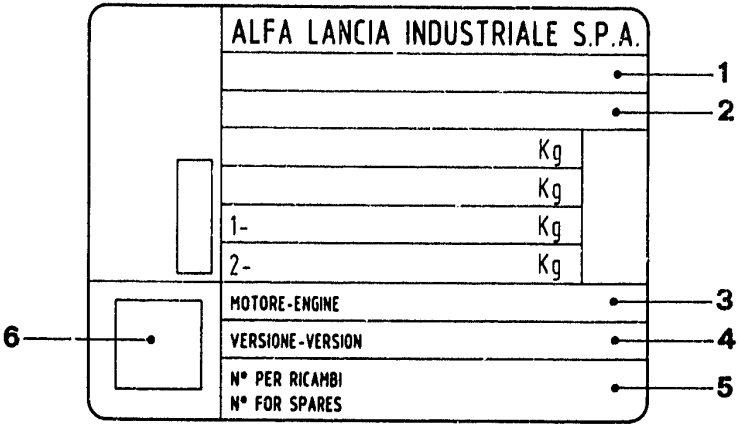

PA018C101

BODY MARKINGS

ZAR (1) 907A1C (2) + 05530021 (3)

(1) Manufacturer's identification code
(2) Vehicle model
(3) Chassis serial number

ENGINE MARKINGS

30747 (4) 000001 (5)

(4) Engine type number
(5) Engine production serial number

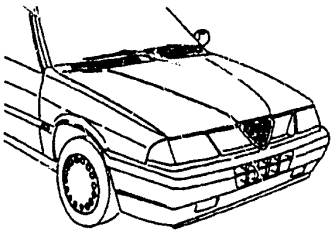

Sport Wagon

- VEHICLE IDENTIFICATION AND SERVICE DATA
- MODEL IDENTIFICATION

VEHICLE IDENTIFICATION AND SERVICE DATA
(SPECIFIC FOR SW MODELS)
IDENTIFICATION PLATES ..... 00 - 36

MODEL IDENTIFICATION
(SPECIFIC FOR SW MODELS)
IDENTIFICATION TABLE ..... 00 - 37
IDENTIFICATION PLATE ..... 00 - 40
BODY MARKINGS ..... 00 - 41
ENGINE MARKINGS ..... 00 - 41

VEHICLE IDENTIFICATION AND SERVICE DATA

SPECIFIC FOR RSW MODELS

IDENTIFICATION PLATES

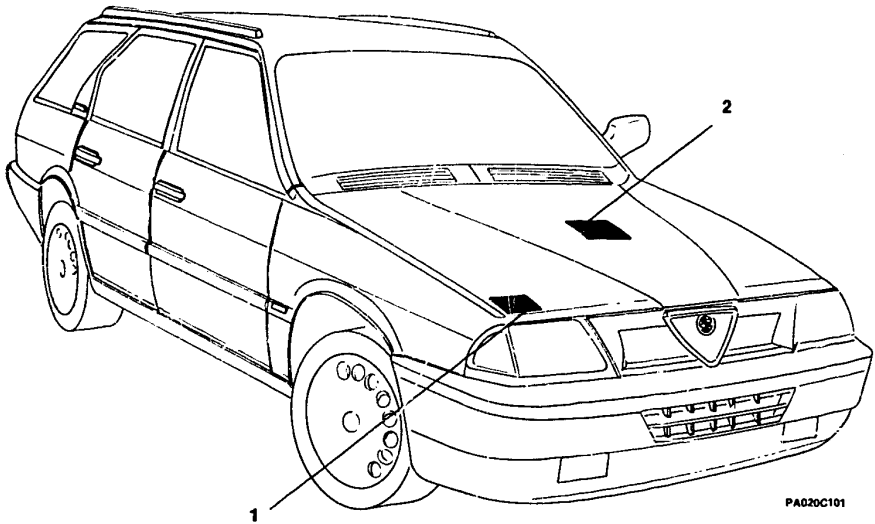

- Engine type and serial number plate
1. Approval and identification plate
2. Vehicle type and chassis serial number plate

MODEL IDENTIFICATION
SPECIFIC FOR SW MODELS
IDENTIFICATION TABLE

IDENTIFICATION \ VERSIONS		Sport Wagon		Sport Wagon 1.3L		Sport Wagon 4x4		Sport Wagon 1.3 IE (*) Sport Wagon 1.4 IE (*) Sport Wagon 1.3 IE L (*) Sport Wagon 1.4 IE L (*)	
BODYSTYLE		five door giardinetta							
DRIVE		LH	RH	LH	RH	LH	RH	LH	RH
VEHICLE TYPE NO.	ON IDENTIFICATION PLATE	907B3		907B3		907B3A		907B3B ▲	
	ON AUXILIARY BAY CROSS MEMBER	907.000		907.000		907.000		907.000	
ENGINE TYPE AND SERIAL NUMBER		30732 from		30732 from 000001		30732 from 000001		30753 from 000001	

▲ Vehicle with catalytic converter
(*) I.A.W. INJECTION-IGNITION SYSTEM

IDENTIFICATION TABLE (Continued)

IDENTIFICATION \ VERSIONS		Sport Wagon 1.3 IE 4x4 (*) Sport Wagon 1.4 IE 4x4 (*)		- Sport Wagon 1.5 IE - Sport Wagon		- Sport Wagon 1.5 IE 4x4 - Sport Wagon 4x4		Sport Wagon 1.7 IE	
BODYSTYLE		five door giardinetta							
DRIVE		LH	RH	LH	RH	LH	RH	LH	RH
VEHICLE TYPE NO.	ON IDENTIFICATION PLATE	907B3C ▲		907B2A ▲		907B2 ▲		907B1	
								907B1A ▲	
	ON AUXILIARY BAY CROSS MEMBER	907.000		907.000		907.000		907.000	
ENGINE TYPE AND SERIAL NUMBER		30753 from 000001		30751 from 000001		30751 from 000001		30736 from 000001	
								30737 from 000001 ▲	

▲ Vehicle with catalytic converter
(*) I.A.W. INJECTION-IGNITION SYSTEM

IDENTIFICATION TABLE (Continued)

IDENTIFICATION \ VERSIONS		Sport Wagon 1.7 IE 4x4		- Sport Wagon B 16V - Sport wagon 16V		Sport Wagon TD Intercooler			
BODYSTYLE		five door giardinetta							
DRIVE		LH	RH	LH	RH	LH	RH		
VEHICLE TYPE NO.	ON IDENTIFICATION PLATE	907B1D 907B1E ▲		907B1F 907B1G ▲		907B5			
	ON AUXILIARY BAY CROSS MEMBER	907.000		907.000		907.000			
ENGINE TYPE AND SERIAL NUMBER		30736 from 000001		30746 from 000001		VM96A from 000001			
		30737 from 000001 ▲		30747 from 000001 ▲					

▲ Vehicle with catalytic converter

IDENTIFICATION PLATE

1. Approval code.
2. Body markings.
3. Engine type number.
4. Vehicle type and version.
5. Serial number for units manufactured: this is a reference for spares ordering, identification of factory of manufacture or assembly and for introducing modifications.

. Marking of correct smoke absorption coefficient value (only for diesels).

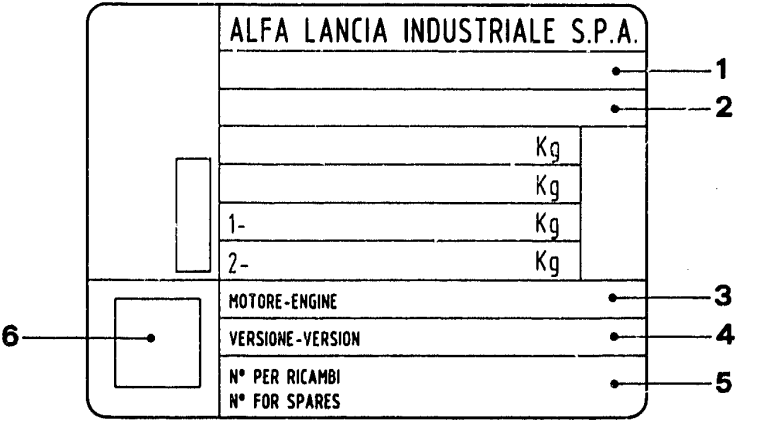

BODY MARKINGS

ZAR	907B1E	+	05530022
(1)	(2)		(3)

(1) Manufacturer's identification code
(2) Vehicle model
(3) Chassis serial number

ENGINE MARKINGS

30737	000001
(4)	(5)

(4) Engine type number
(5) Engine production serial number

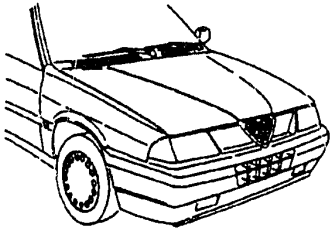

- JACKING AND TOWING POINTS
- PROGRAMMED MAINTENANCE
- FLUIDS AND LUBRICANTS
- APPROXIMATE REFILL CAPACITIES

JACKING AND TOWING POINTS ..... 00 - 42

PROGRAMMED MAINTENANCE

LIST OF OPERATIONS TO BE PERFORMED AFTER THE FIRTS 1,500 KMS AND BEFORE 2,500 KMS ..... 00 - 43

CHART SHOWING MAINTENANCE OPERATIONS TO BE CARRIED OUT AT INDICATED KM ..... 00 - 44

FLUIDS AND LUBRICANTS

TABLE ..... 00 - 47

APPROXIMATE REFILL CAPACITIES

FOR PETROL ENGINES ..... 00 - 52

FOR DIESEL ENGINES ..... 00 - 53

JACKING AND TOWING POINTS

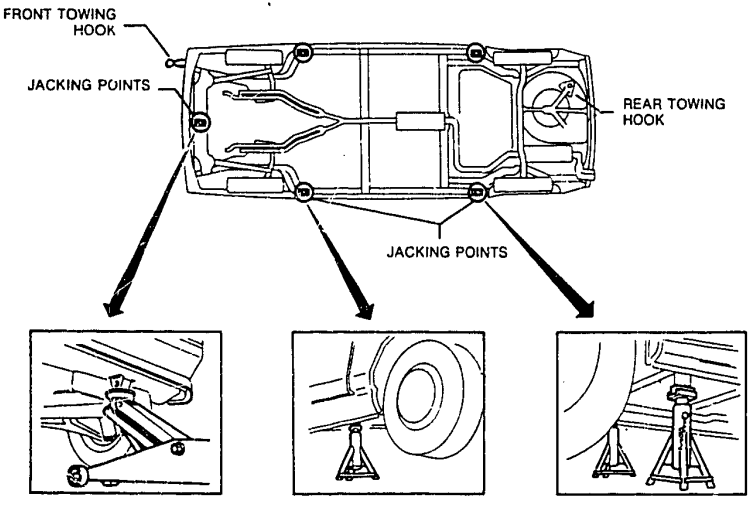

For Permanent 4 vehicle: in case of towing with two wheels raised, turn the ignition key to position 1 (key-operated services excluded).

PROGRAMMED MAINTENANCE

LIST OF OPERATIONS TO BE PERFORMED AFTER THE FIRST 1,500 KMS AND BEFORE 2,500 KMS

N°	OPERATIONS
1	Replace engine oil and filter and check lubrication circuit tightness
2	Check condition and tension of alternator, water pump, air-conditioner compressor, power steering pump drive belt
3	Check fuel supply circuit tightness. Check fuel vapour emission control unit (if foreseen)
4	Check the sealing of the air supply system downstream of the air flow meter (versions with petrol injection)
5	Check exhaust emission carburated (petrol engine models). Check exhaust smoke (Diesel engine models)
6	Check idle speed and ignition advance (petrol engine models, excepting Motronic ML4.1 equipped engine)
7	Check antifreeze mixture level and verify cooling circuit tightness
8	Check condition of protective boots of axle shafts, power steering and steering joint caps
9	Check wheel toe-out
10	Check brake system pipe tightness
11	Check brake and clutch fluid level
12	Check hand brake travel
13	Test vehicle

CHART SHOWING MAINTENANCE OPERATIONS TO BE CARRIED OUT AT INDICATED KM

N°	OPERATIONS	km x 1000									
		20	40	60	80	100	120	140	160	180	200
1	Replace engine oil and filter (at least once a year) and check lubrication circuit tightness	●	●	●	●	●	●	●	●	●	●
2	Replace timing drive belts				●				●		
3	Check condition and tension of alternator, water pump, air conditioning compressor, power steering belts	●	●	●	●	●	●	●	●	●	●
4	Check air filter cartridge		●		●		●		●		●
5	Check fuel filter cartridge (Diesel engine models)	●	●	●	●	●	●	●	●	●	●
6	Check fuel filter cartridge (petrol engine models)		●		●		●		●		●
7	Check exhaust gase oxygen sensor (Lambda probe) (models with catalyst) (1)					●					●
8	Check ignition advance (petrol engine, excepting Motronic ML4.1 models)		●		●		●		●		●
9	Replace spark plugs (excluding 16V catalyzed)		●		●		●		●		●
	Replace spark plugs (16V catalyzed only)					●					●
10	Check antifreeze mixture level	●	●	●	●	●	●	●	●	●	●

(1) See "ELECTRICAL-ELECTRONIC DIAGNOSIS"

N°	OPERATIONS	km x 1000									
		20	40	60	80	100	120	140	160	180	200
11	Check brake/clutch fluid level	●	●	●	●	◐	●	◐	●	◐	●
12	Check gearbox and differential oil level		●		●		●		◐		●
13	Replace gearbox and differential oil						●				
14	Grease propeller shaft slip yoke	●		●		◐		●		●	
15	Check condition of protective boots of axle shafts, power steering and steering joint caps	●	●	●	◐	●	●	●	●	●	●
16	Check brake system pipe tightness	●	●	●	●	●	●	●	●	●	●
17	Check and brake travel	●	●	●	●	●	●	●	◐	●	●
18	Check oil level of power steering	●	◐	●	●	●	●	◐	●	●	●
19	Test vehicle	●	●	●	●	●	●	●	●	●	●



To ensure proper operation, follow these suggestions carefully:

Every 500 kms (or when refueling) check:
- Engine oil level
- Coolant level.
- Brake clutch fluid level
- Tyre pressures
- The possible presence of water in the fuel filter and drain (Diesel engine models only)
- Fluid level for the screen and lamp washer systems

Engine oil and filter
They must be replaced at the intervals indicated.
With low mileages they must be replaced once a year.

Air filter
If you habitually drive on dusty roads, the air filter should be checked more often than indicated.

Brake pads
On some versions the brake pads wear is indicated by the illumination of a warning light on the dashboard.
For cars with wear indicator for the front pads, when wear is indicated and replacement made, the rear pads should be checked at the same time.
Depending on the use of the car, the rear pads may not need immediate replacement; in this case, it is recommended to check them again later on.

Brake fluid/clutch
Brake fluid is hygroscopic, e.e. it absorbs water.
To avoid anomalies during braking the brake fluid must be replaced each year.

Battery
During hot weather, check the electrolyte level frequently.

Air conditioner (if fitted)
Once a year, preferably before warm weather starts, have the filter on the evaporator (*) checked by the Alfa Romeo Service Network.

Anti-freeze
We recommende you to top up with Alfa Romeo Concentrated Anti-freeze antifreeze fluid, in order to preserve the mixture protection characteristics.

Note
Under special driving conditions (e.g. on roads sprinkled with antifreeze salt and/or corrosive substances, rough road surfaces, etc.), often check the boots of the axle shafts and steering box, and clean and lubricate joints, hinges, door-catches, bonnet catch, etc.
When forced to use fuel, lubricants and/or fluids in general with characteristics different from those specified by the manufacturer (in emergencies), replace the fluids and relative filters at the earliest opportunity.

(*) At shorter intervals if the car is used mainly in dusty territories.

FLUIDS AND LUBRICANTS

TABLE

Type	Application	Classification	Name		
			AGIP	IP	Others
Oil	Engine - 01 (petrol engines)	API SF/CD CCMC G5/PD2/D4 SAE 10W/40	Nuovo Sint 2000 SAE 10W/40	Sintiax Motor Oil SAE 10W/40	SELENIA SPECIAL FORMULA ALFA ROMEO 10W/40 (1)
	Engine - 01 (turbodiesel engines)	API SF/CD CCMC PD2 SAE 10W/40	SINT TURBO DIESEL 10W/40	SINTIAX TURBO DIESEL 10W/40	SELENIA TURBO DIESEL (1)
	Gearbox - 13 Differential - 17	SAE 80W/90 API GL-5	Rotra MP SAE 80W/90	Pontiax HD SAE 80W/90	TUTELA W90/M-DA
	Front-wheel suspension - 21	SAE J 306 a API GL-S	Rotra MP SAE 80W/90	Pontiax HD SAE 80W/90	
	Hydraulic steering - 23	GM DEXRON II	DEXRON II	DEXRON FLUID II	TUTELA GI/A
	Rear-wheel suspension - 25	SAE J 306 a API GL-S	Rotra MP SAE 80W/90	Pontiax HD SAE 80W/90	

(1) Product to be used as an alternative in all countries except ITALY.

Type	Application	Classification	Name		
			AGIP	IP	Others
Grease	Fuel supply - 04	NLGI n. 1	Grease 15	Autogrease TR	
	Engine ignition - 05				ISECO: Molykote A
	Clutch - 12	NLGI n. 3	Grease 33 FD	Autogrease FD	
		NLGI n. 1	Grease 15	Autogrease TR	
					ISECO: Molykote BR2
					ISECO: Molykote Pasta G
	Gearbox - 13 Differential - 17	NLGI n. 3	Grease 33 FD	Autogrease FD	
		NLGI n. 1	Grease 15	Autogrease TR	
		NLGI n. 2			ISECO: Ergon Rubber Grease n. 3 SPCA: Spagraph
	Drive shaft - 15	SAE NLGI 1/2	Grease 15	Autogrease MP	

Type	Application	Classification	Name		
			AGIP	IP	Others
Grease	Gearbox - 13 Differential - 17				MILLOIL: Lubricant for elastomer seals
					UNION CARBIDE CHEMICALS COMPANY: Ucon lubricant 50 HB 5100
					ISECO: Molykote BR2
	Differential - 17				ISECO: Molykote VN 2461/C OPTIMOL: Olistamoly 2 LN 584
	Front-wheel suspension - 21	NLGI n. 3	Grease 33 FD	Autogrease FD	
					UNION CARBIDE CHEMICALS COMPANY: Ucon lubricant 50 HB 5100
					MILLOIL: Lubricant for elastomer seals



Type	Application	Classification	Name		
			AGIP	IP	Others
Grease	Front and rear brakes - 22	NLGI n. 1	Grease 15	Autogrease TR	
					ATE: Bremszylinder Pasta DBA
	Steering - 23	NLGI n. 3	Grease 33 FD	Autogrease FD	
					UNION CARBIDE CHEMICALS COMPANY: Ucon lubricant 50 HB 5100
					MILLOIL: Lubricant for elastomer seals
	Rear suspension - 25	NLGI n. 3	Grease 33 FD	Autogrease FD	
		NLGI n. 1	Grease 15	Autogrease TR	
					UNION CARBIDE CHEMICALS COMPANY: Ucon lubricant 50 HB 5100
					MILLOIL: Lubricant for elastomer seals



Type	Application	Classification	Name		
			AGIP	IP	Others
Grease	Wheels and tyres - 28				UNION CARBIDE CHEMICALS COMPANY: Ucon lubricant 50 HB 5100
					MILLOIL: Lubricant for elastomer seals
Fluid	Engine cooling - 07		Antifreeze extra	Antifreeze	ALFA ROMEO CLIMAFLUID PERMANENT -40°C (1)
					ALFA ROMEO ANTIFREEZE (2)
	Brakes - 22 Clutch - 12		BRAKE FLUID SUPER DOT 4		ALFA ROMEO BRAKE FLUID SUPER DOT 4
				AUTO FLUID FR DOT 4	

(1) Ready-for-use cooling fluid
(2) Concentrated cooling fluid

In countries where the specified products are not available and in cases of absolute necessity, other well-known makes of lubricants may be used, provided that they correspond to the classifications and viscosity specified. In this case it will be necessary to replace the lubricant in the circuit altogether, as well as the filter, after 10,000 km.

APPROXIMATE REFILL CAPACITIES - FOR PETROL ENGINES

Components \ Unit of measurement		kg		Litres	
FUEL TANK		-		450	53 (1)
FUEL RESERVE		-		6,5	
ENGINE OIL		4,1	3,6 (•)	4,6	4 (•)
GEARBOX-DIFFERENTIAL OIL		2,4		2,6	
REAR DIFFERENTIAL OIL (for 4x4 version)		0,9		1,0	
ENGINE COOLING CIRCUIT		-		7,8	
QUANTITY OF CONCENTRATED ANTIFREEZE TO BE USED AT TEMPERATURES UP TO -40°C		-		4,29	4,015 (2)
QUANTITY OF ANTIFREEZE READY FOR USE	-20°C	-.		7,8	7,3 (2)
POWER STEERING OIL		-		1,1	
BRAKE AND CLUTCH HYDRAULIC CIRCUITS		0,45		-	
WINDSCREEN WASHER LIQUID CONTAINER		-		6,0	
CONDITIONER FREON		1,150		-	

(•) The amount indicated applies to periodic replacements (1) For 4x4 versions (2) For Sport Wagon 1.7 IE and 4x4

APPROXIMATE REFILL CAPACITIES - FOR DIESEL ENGINES

Components / Unit of measurement		kg	Litres
DIESEL FUEL TANK		-	50
DIESEL FUEL RESERVE		-	6,5
ENGINE OIL		4,57 (•)	5,25 (•)
GEARBOX-DIFFERENTIAL OIL		2,4	2,6
POWER STEERING OIL		-	0,9
ENGINE COOLING CIRCUIT		-	8,8
QUANTITY OF CONCENTRATED ANTIFREEZE TO BE USED AT TEMPERATURES UP TO -40°C		-	4,84
QUANTITY OF ANTIFREEZE READY FOR USE	-20°C	-	8,8
BRAKE AND CLUTCH HYDRAULIC CIRCUITS		0,45	-
WINDSCREEN WASHER LIQUID CONTAINER		-	6,0

(•) The amount indicated applies to periodic replacements

MICROFICHE INDEX

Microfiche 2/15 Group 00 Maintenance



Group 00 - Maintenance

TWIN-CARBURETTOR ENGINES
ENGINE MAINTENANCE, FUEL SYSTEM, IGNITION ..... 00 · A
ENGINE MAINTENANCE, FUEL SYSTEM, IGNITION (continued), COOLING MAINTENANCE ..... 00 · B
MAINTENANCE OF MECHANICAL GROUPS ..... 00 · C
TCS, SPECIFIC TOOLS ..... 00 · D

ENGINES WITH ELECTRONIC IGNITION (LE3-Jetronic)
ENGINE MAINTENANCE, FUEL SYSTEM, IGNITION ..... 00 · E
ENGINE MAINTENANCE, FUEL SYSTEM, IGNITION (continued) ..... 00 · F
COOLING MAINTENANCE, MAINTENANCE OF MECHANICAL GROUPS ..... 00 · G
TCS, SPECIFIC TOOLS ..... 00 · H

ENGINE WITH ELECTRONIC INJECTION (16 VALVES)
ENGINE MAINTENANCE, FUEL SYSTEM, IGNITION ..... 00 · I
ENGINE MAINTENANCE, FUEL SYSTEM, IGNITION (continued), COOLING MAINTENANCE ..... 00 · L
MAINTENANCE OF MECHANICAL GROUPS ..... 00 · M
TCS, SPECIFIC TOOLS ..... 00 · N

TURBODIESEL ENGINE
ENGINE MAINTENANCE SUPPLY ..... 00 · O
COOLING MAINTENANCE, MAINTENANCE OF MECHANICAL GROUPS ..... 00 · P
TCS, SPECIFIC TOOLS ..... 00 · Q

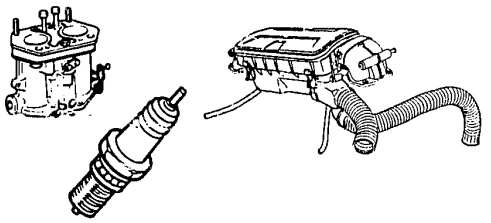

TWIN-CARBURETTOR ENGINES

- ENGINE MAINTENANCE, FUEL SYSTEM, IGNITION

ENGINE MAINTENANCE, FUEL SYSTEM AND IGNITION

REPLACING ENGINE OIL AND FILTER ..... 00 - 1
REPLACING TIMING BELTS ..... 00 - 2
TIMING BELTS ..... 00 - 8
Tensioning water pump and alternator drive belt ..... 00 - 8
Tensioning air conditioning drive belt ..... 00 - 9
Tensioning power steering belt ..... 00 - 10
CHECKING FUEL SUPPLY PRESSURE AND SEALING ..... 00 - 11
CHECKING AIR CLEANER CARTRIDGE ..... 00 - 12

REPLACING ENGINE OIL AND FILTER

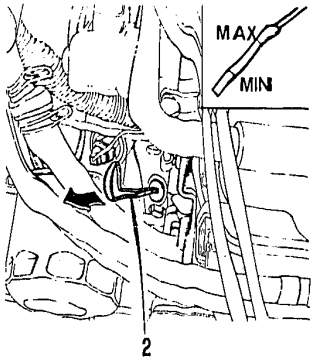

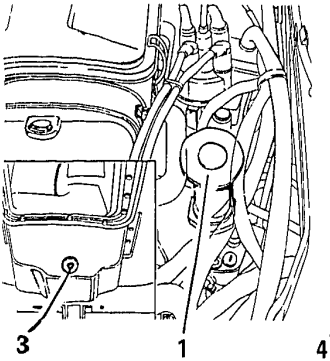

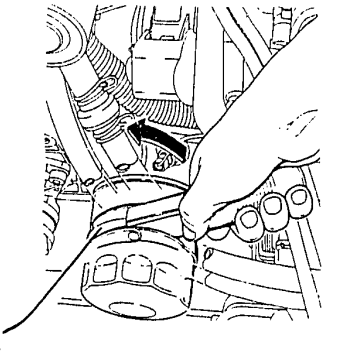

The oil level should be checked when the vehicle is on a level surface.
Whitish substances in the oil is due to leakage of coolant.
Low viscosity is caused by dilution with fuel.

1. When the engine is warm, remove the oil filler cap.
2. Withdraw the dipstick.
3. Unscrew the drainage plug and let the oil drain out for at least 15 minutes.
4. Using the appropriate tool, loosen the oil filter and remove it.
- Clean the drain plug and screw it back onto the sump.
- Wipe the gasket on the new filter with oil and screw it into position by hand.
- Refill the engine with oil (see TSN).
- Check the level using the dipstick.
- Replace the filler cap, run the engine at idle speed for about two minutes, switch off the engine and wait for a few minutes.
- Check the oil level and ensure that there are no leaks.

REPLACING TIMING BELTS

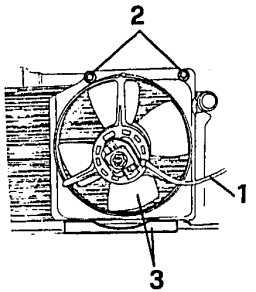

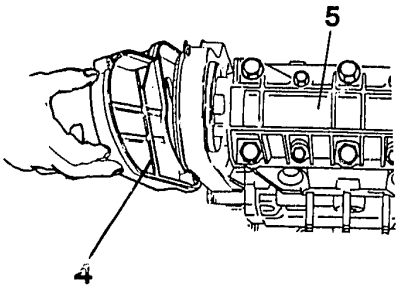

1. Disconnect the electrical cables from the electric fan.
2. Loosen the screws securing the electric fan.
3. Remove the fan by sliding it out of its groove.

- Remove the spark plugs.
- Remove the alternator and water pump drive belt (see **GROUP 01**).

4. Remove the timing belt covers.
5. Remove the camshaft support covers.

REPLACING TIMING BELTS (continued)

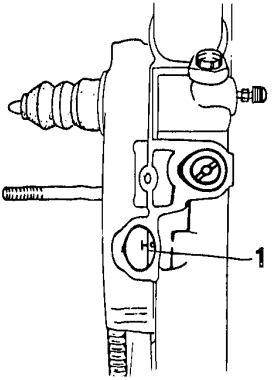

1. Remove the timing check cover and turn the crankshaft until the piston of cylinder number 1 is at TDC in the ignition phase. This position is ensured when the reference mark T on the flywheel is in line with the mark on the rear cover.

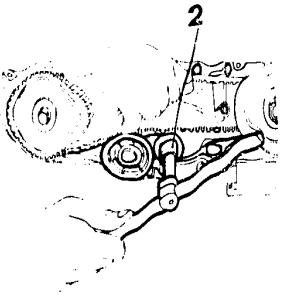

2. Slacken off the nuts securing the belt tensioner and exert pressure on the tightening pulleys in order to overcome the tension on the belts. Lock the nuts in this position.
- Remove first the right-hand toothed belt and then the left from the camshaft and crankshaft pulleys.

⇩

REPLACING TIMING BELTS (continued)

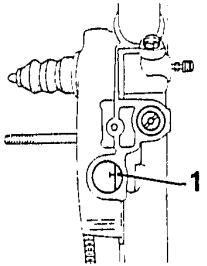

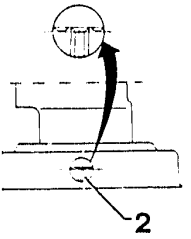

Check engine timing.

1. When the reference mark T is aligned with the mark on the rear cover, turn the crankshaft approximately 45° to prevent the valves from hitting the piston during rotation of the camshaft.

2. Rotate the left-hand timing belt until the tooth and its two adjacent grooves on the left-hand pulley can be seen through the inspection hole on the rear guard of the timing belt.

- Rotate the crankshaft until the mark on the engine rear cover is in line with the reference mark T on the flywheel (with the piston of cylinder No. 1 at TDC in the ignition phase).

REPLACING TIMING BELTS (continued)

1. Holding the shafts in this position, the left-hand timing belt can be fitted on the pulley without involving the use of tools.
2. Loosen the belt tensioner nut to allow the belt tensioner pulley to come into contact with the belt so that the tension created by the spring is exerted on the belt. Tighten the nut.
- Rotate the crankshaft again by about 45° to prevent the valves from hitting the piston when the camshaft is being positioned.
3. Rotate the right-hand camshaft until the tooth and two adjacent grooves on the right-hand pulley can be seen through the inspection hole on the rear guard of the timing pulley.
- Rotate the crankshaft until the mark on the engine rear cover is in line with the reference mark T on the flywheel (with piston of cylinder No. 1 at TDC in the ignition phase).

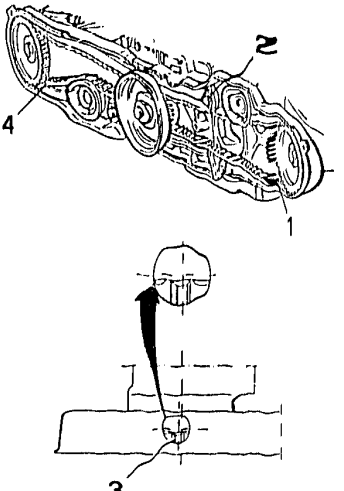

The right-hand pulley tends to rotate away from its correct position because the camshaft interacts with the intake valve of cylinder No. 3. Use the special toothed spanner N° 1.822.008.000 (A.5.0195) to keep the pulley in the correct position for mounting the belt.

4. Fit the right-hand timing belt onto the pulleys.

REPLACING TIMING BELTS (continued)

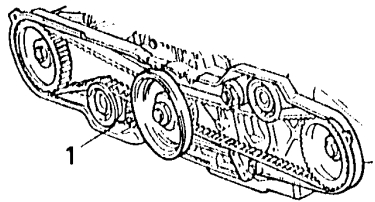

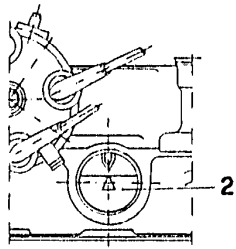

1. Loosen the locknut on the right-hand belt tensioner to allow the belt tensioner pulley to exert the force conferred by the spring onto the belt.Tighten the belt.
- Check, the tension on the timing belts beginning from the one on the right-hand side.
2. Rotate the crankshaft on the normal direction of rotation until reference mark ▼ on the flywheel is in line with the reference mark on the engine rear cover.

⚠ **In this position the four cams of the right-hand camshaft (cylinders 1 and 3) do not touch their respective valve tappets.**

⇩

REPLACING TIMING BELTS (continued)

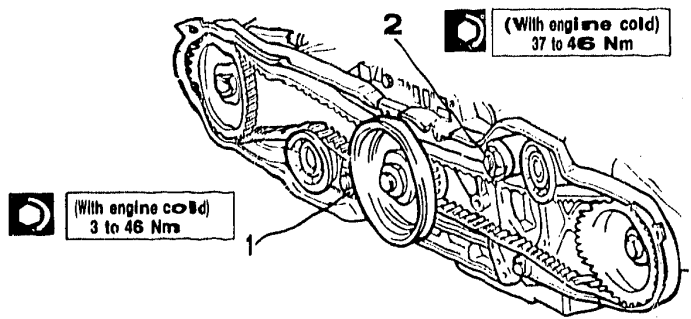

1. Loosen the right-hand belt tensioner nut so that it tensions the timing belt, and then tighten it to the correct torque.

During this operation do not exert any pressure on the arm or on the belt tensioner pulley in order to avoid altering the correct tension load.

- Turn the engine one revolution in the normal direction of rotation (starting from the previous position with the reference mark ▼ aligned on the engine flywheel).

In this position the four cams of the left-hand camshaft (cylinders 2 and 4) do not touch their respective valve tappets.

2. Loosen the left-hand belt tensioner nut so that it tensions the left-hand timing belt and then re-tighten to the correct torque.
- Once all the operations have been completed check that the timing marks on the pulleys correspond to the rear holes of the timing belt.
- Reassemble the various components, reversing the procedure followed for disassembly and tension the alternator-water pump belt.

DRIVE BELTS

TENSIONING ALTERNATOR AND WATER PUMP DRIVE BELT

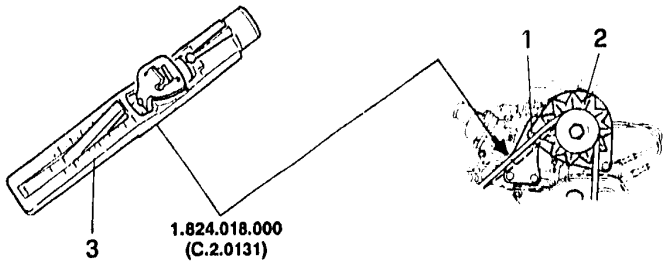

Tensioning the alternator - water pump drive belt	
During assembly	400 - 450 N
Re-tensioning	300 - 350 N

1. Free the alternator mounting bolts.
2. Move the alternator to tighten or slacken the belt.
3. Re-tighten the bolts and with tool N° 1.824.018.000 (C.2.0131) check that the tension values are within the specified limits.

- Repeat the above operations if the tension values are not within the specified limits.

DRIVE BELTS (continued)

TENSIONING AIR CONDITIONER DRIVE BELT

- Loosen the bolts securing the compressor.
- Move the compressor to tighten or slacken the belt.
- Re-tighten the bolts and using tool N° 1.824.018.000 (C.2.0131) check that the tension values are within the specified limits.

Tensioning the air conditioning drive belt	
During refitting	450 - 500 N
After 1000 - 1500 km	350 - 400 N

- Repeat the above operation if the tensions are not within the specified limits.

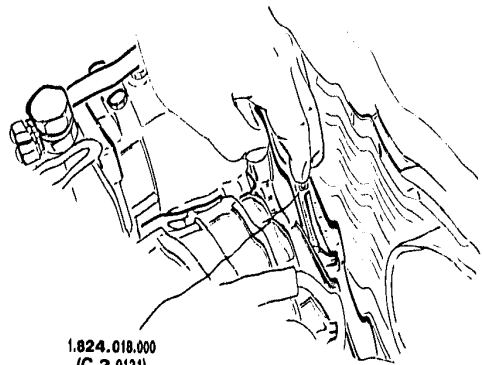

1.824.018.000
(C.2.0131)

DRIVE BELTS (continued)

TENSIONING POWER STEERING BELT

- Loosen the bolts securing the power steering pump.
- Move the power steering pump to tighten or slacken the drive belt.
- Re-tighten the bolts and using tool N° 1.824.018.000 (C.2.0131) check that the tension values are within the specified limits.

Tensioning the power steering belt	
During refitting	400 - 450 N
After 1000 - 1500 km	300 - 350 N

- Repeat the above operations if the tension is not within the prescribed limits.

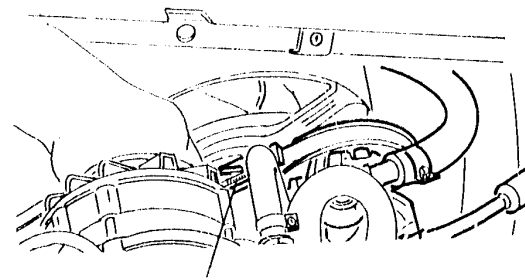

1.824.018.000
(C.2.0131)

CHECKING FUEL SUPPLY PRESSURE AND SEALING

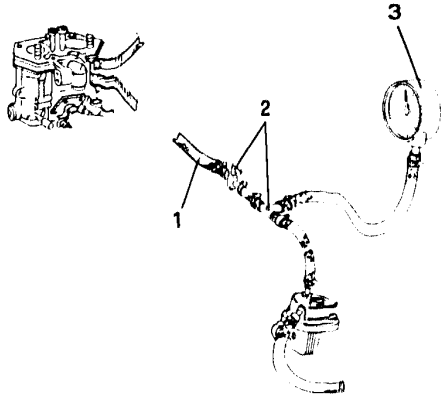

Pump FISPA	17.7 - 29.4 kPa (0.177 - 0.294 bars 0.18 - 0.30 kg/cm²)	at 5000 r.p.m.
Pump SAVARA - GILARD	17.7 - 29.4 kPa (0.177 - 0.294 bars 0.18 - 0.30 kg/cm²)	at 6000 r.p.m.

1. Remove the supply hose connecting the pump and left-hand carburettor.
2. Insert a T union fitted with a cut-off taps between the pump and the carburettor.
3. Attach a manometer to the free end of the hose.

- Start the engine and with the tap on the delivery hose down stream of the manometer closed and at the same geometric pressure as the pump, check that the pump delivery pressure is as specified.
- If the values measured are incorrect replace the pump.

CHECKING AIR CLEANER CARTRIDGE

1. Release the four clips securing the cover of the reservoir and raise the cover.
2. Release the four clips securing the cartridge retaining frame and tip the clips over the side of the reservoir.
3. Remove the cartridge retaining frame.
4. Remove the cartridge.

- Carefully clean the cartridge retaining frame and cartridge by blowing with low pressure compressed air from the side fitted with the tabs. If necessary replace the cartridge which should be fitted with the plastic part facing upwards.

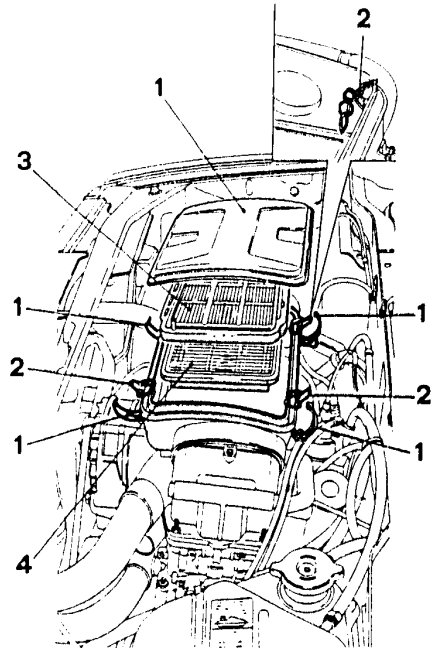

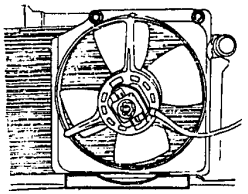

TWIN-CARBURETTOR ENGINES

- ENGINE MAINTENANCE, FUEL SYSTEM, IGNITION (continues)
- COOLING MAINTENANCE

ENGINE MAINTENANCE, FUEL SYSTEM, IGNITION

CHECKING AND ADJUSTING IGNITION TIMING.....00 - 13
CHECKING AND ADJUSTING IDLE SPEED AND EXHAUST EMISSIONS (CO%).....00 - 15
REPLACING SPARK PLUGS.....00 - 18

COOLING MAINTENANCE

CHECKING ENGINE COOLANT LEVEL.....00 - 19
CHECKING SEALING OF ENGINE COOLING SYSTEM.....00 - 20
Checking sealing of pressurized cap.....00 - 21

CHECKING AND ADJUSTMENT OF IGNITION TIMING

1. Connect the clips of the strobe gun to the battery.
2. Connect the pick-up to the high tension cable of cylinder number 1.
3. Connect an electronic r.p.m. counter to the engine connecting the leads to the coil terminals and the pick-up to the high tension lead of the coil.

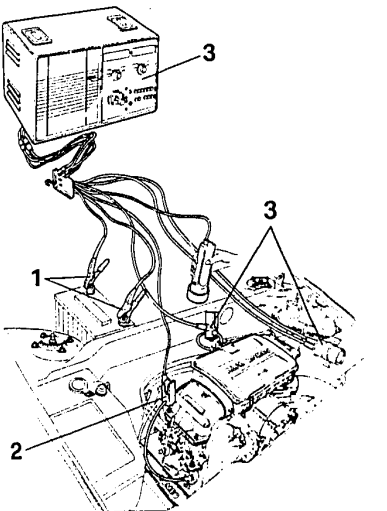

CHECKING AND ADJUSTMENT OF IGNITION TIMING (continued)

1. Remove the plastic cover from the engine rear cover.
- Start the engine and run to normal operating temperature.
- Using the strobe gun ensure that the timing advance mark on the flywheel lines up with the timing index on the rear cover at 900 r.p.m.
2. Disconnect the vacuum advance pipe from the distributor and ensure that the maximum advance timing mark on the flywheel lines up with the timing index on the rear cover at 4.500 r.p.m.
3. If the timing marks do not line up, loosen the distributor lock bolt and rotate the distributor clockwise to retard or anticlockwise to advance the timing.
- Tighten the distributor lock bolt and check that the fixed and maximum timing advance settings are correct.
- Replace the plastic cover on the engine rear cover.
- Insert the vacuum timing advance pipe into the distributor.
- If above adjustment does not allow the maximum advance to be corrected the distributor must be overhauled or replaced.

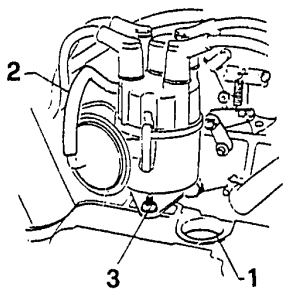

Fixed advance angle	8° ± 1°
Maximum advance angle	34°

CHECKING AND ADJUSTMENT OF IDLE SPEED AND EXHAUST EMISSIONS (CO%)

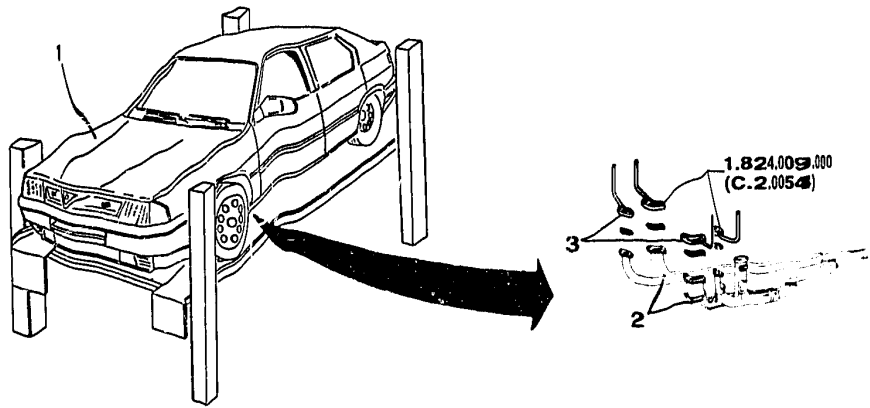

- Before starting the operations check that the accelerator pedal is correctly adjusted (see 04-22).
1. Raise the vehicle on a lift.
2. Disconnect the exhaust manifolds from the cylinder heads.
3. Insert flanges N° 1.824.009.000 (C.2.0054) between each flange of the exhaust manifold and its attachment on the cylinder heads and then reconnect the manifold to the heads.

NOTE The four pipette tubes lead into the engine compartment. They have special plugs and are designed to check the exhaust gas emission of each cylinder.

CHECKING AND ADJUSTMENT OF IDLE SPEED AND EXHAUST EMISSIONS (CO%) (continued)

1. Connect an electronic rev counter to the engine.
2. Open the two vacuum intakes on each carburettor.
3. Connect the exhaust gas tester to each pipette tube of tool N° 1.824.009.000 (C.2.0054).
4. Connect each vacuum intake to the tubes of the mercury column vacuum gauge.

- Connect the end of the exhaust pipe to the toxic gas aspirator.
- Start the engine and run to normal operating temperature.
- Check that the r.p.m. and the CO percentage in the exhaust are as specified.

Idle speed r.p.m.	850 - 1000 r.p.m.
% CO in volume	1.5 - 3.5

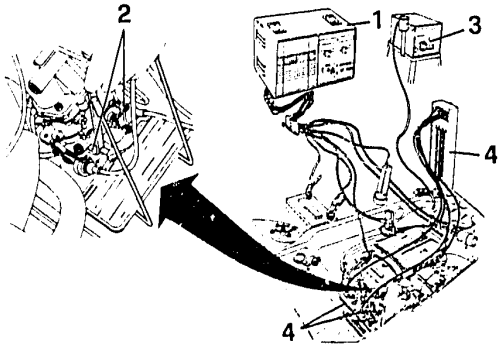

CHECKING AND ADJUSTMENT OF IDLE SPEED AND EXHAUST EMISSIONS (CO%) (continued)

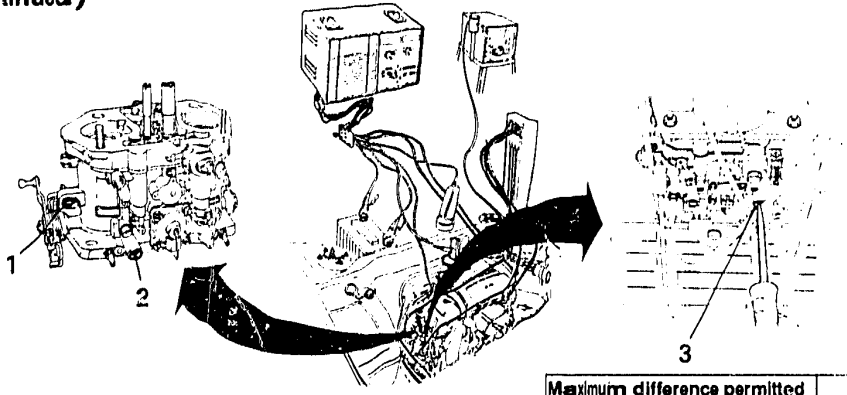

Maximum difference permitted between valves on the same carburettor	40 mmHg

- If the CO percentage is higher than the permitted level, proceed as follows:

1. Adjust the gas valve adjustment screws to reach the specified r.p.m. and valve alignment between the right-hand and the left-hand carburettors.

If there is a misalignment between the cylinders of the same carburettor it is necessary to overhaul or replace the carburettor.

2. Remove the sealing caps from the the mixture screw seats.
3. Adjust the mixture screws of each cylinder until the specified percentage of exhaust CO is obtained.

- Check that the engine idle speed is regular.
- Disconnect all equipment.

REPLACING SPARK PLUGS

- The spark plugs fitted as standard are of the surface discharge type with four radial electrodes and one central electrode. This type of spark plug does not require electrode gap setting.

The use of spark plugs of different specifications or of a different size may cause serious damage to the engine and alter the level of toxic emissions contained in the exhaust gas. Replace the spark plugs if the ceramic insulation is cracked or if the electrodes are excessively eroded.

- When the engine is cold disconnect the spark plug leads.
- Remove any dirt or impurities by blowing into the spark plug recesses with compressed air.
- Remove the spark plugs.
- Lubricate the threads of the new spark plugs with the specified oil and then tighten them to the correct torque.
- Ensure that there is a good mechanical and electrical connection between the spark plug leads and the connectors.
- Connect the leads to the spark plugs.

Firing sequence:	1 - 3 - 2 - 4

GOLDEN LODGE
25HL

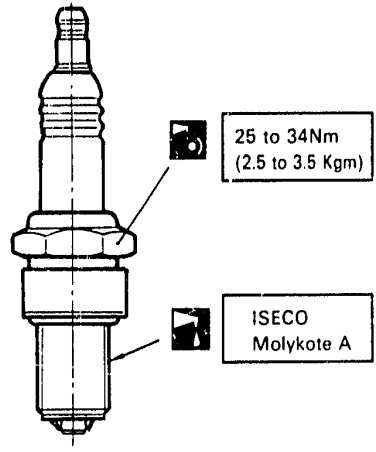

CHECKING LEVEL OF ENGINE COOLANT

- When the engine is cool check that the level of the liquid in the expansion tank is between the MIN and MAX marks.
- If not refill the system with the specified fluid (see TSN).

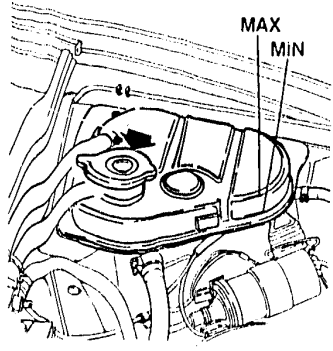

CHECKING SEALING OF COOLING SYSTEM

Cooling circuit test pressure
107.9 kPa (1.08 bars; 1.1 kg/cm^2)

- Unscrew the pressurized cap from the expansion tank.

1. Attach the pressure test equipment to the cap seating on the expansion tank.
2. Pressurize the cooling circuit and watch the pressure gauge to see if the pressure remains constant at the preset value.

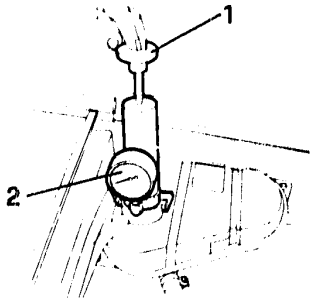

CHECKING SEALING OF COOLING SYSTEM (continued)

CHECKING SEALING OF PRESSURIZED CAP

Pressure cap setting
100 ± 10 kPa (1 ± 0.1 bar; 1 ± 0.1 kg/cm²)

1. Screw the union piece to the test gauge and attach it to the pressurized cap on the expansion tank.
2. Pump up the pressure and ensure that the release valve opens at the set pressure as read from the gauge.

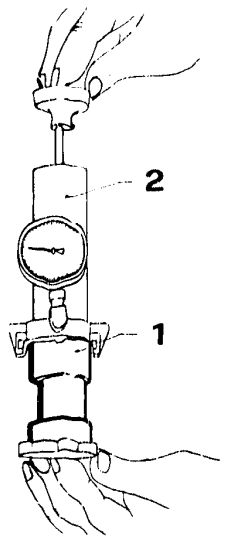

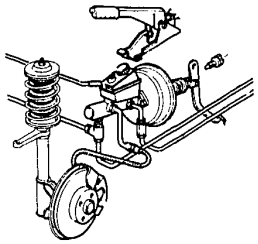

TWIN-CARBURETTOR ENGINES

- MAINTENANCE OF MECHANICAL GROUPS

MAINTENANCE OF MECHANICAL GROUPS

CHECKING LEVEL AND REPLACING GEARBOX AND DIFFERENTIAL OIL ..... 00 - 22
CHECKING LEVEL AND REPLACING REAR DIFFERENTIAL OIL (Specific for 4x4 models) ..... 00 - 23
GREASING DRIVE SHAFT SLEEVE (Specific for 4x4 models) ..... 00 - 24
CHECKING WHEEL TOE-OUT ..... 00 - 25
CHECKING LEVEL OF BRAKE/CLUTCH FLUID ..... 00 - 26
CHECKING BRAKING SYSTEM ..... 00 - 27
CHECKING LEVEL OF POWER STEERING FLUID ..... 00 - 28
CHECKING DRIVE SHAFTS AND STEERING TIE-RODS ..... 00 - 29
CHECKING AND ADJUSTMENT OF HANDBRAKE ..... 00 - 30

CHECKING LEVEL AND REPLACING GEARBOX AND DIFFERENTIAL OIL

CHECKING GEARBOX - DIFFERENTIAL OIL LEVEL

- Unscrew the filler cap and check that the oil level comes up to the lower rim of the filler neck. Clean the cap and screw it back on.

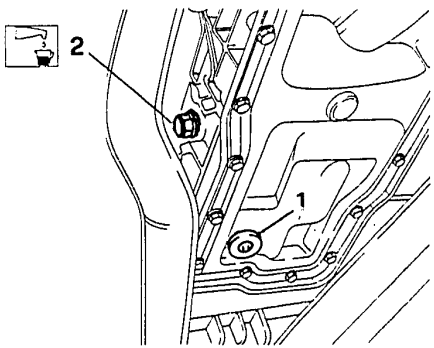

REPLACING GEARBOX - DIFFERENTIAL OIL

1. When the engine is cool, remove the oil drain plug.
2. Remove the oil filler cap.

- Let the oil drain off for at least 15 minutes and then clean the drain plug and screw it back on.
- Refill with the specified type and quantity of oil (see TSN) through the filler neck and then screw the cap back on.

CHECKING AND REPLACING REAR DIFFERENTIAL OIL (For 4x4 versions)

CHECKING OIL LEVEL

- Unscrew the filler cap and check that the oil level comes up to the lower rim of the filler neck. Clean the cap and screw it back on.

REPLACING OIL

1. When the oil is hot remove the filler cap from the outer casing of the rear differential.
2. Remove the drainage plug.

- Let the oil drain off for at least 15 minutes and then clean the drainage plug and screw it back on.
- Refill with the specified type and quantity of oil (see TSN) through the filler neck and then screw the cap back on.

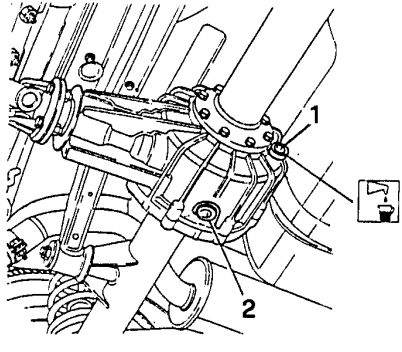

GREASING DRIVE SHAFT SLEEVE (For 4x4 versions)

1. Raise the vehicle and grease the drive shaft sleeve with the specified grease.

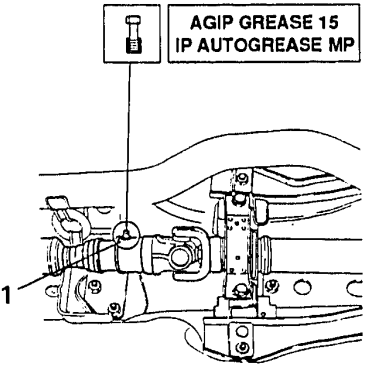

CHECKING WHEEL TOE-OUT

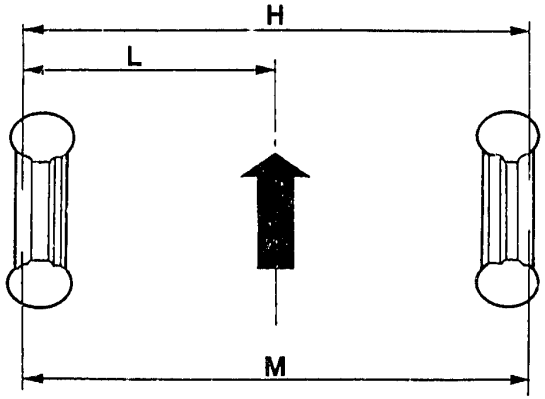

L = 1/2 M + 2 ± 1
H = M + 4 ± 2

- Check the vehicle attitude (see **GROUP 21**).
- Working on one side of the suspension by adjusting the steering tie-rod until the value L is obtained.
- Work in the opposite tie-rod until the value H is obtained.
- Tighten the adjustment nuts on the tie-rods to the correct torque.

55 - 69 Nm (5.6 - 7 kgm)

- Correct the position of the steering wheel rungs by removing it from its seating and reinstalling it with a tollerance on the central rung of ± 5°.

CHECKING LEVEL OF BRAKE/CLUTCH FLUID

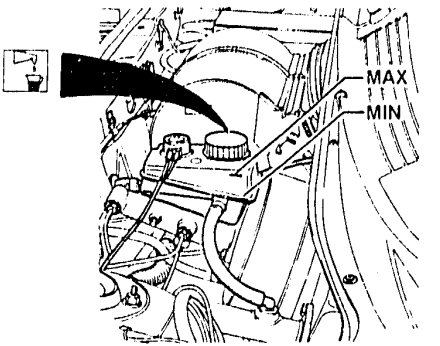

NOTE **The fluid level must be checked when the vehicle is standing on a level surface.**

- Ensure that the fluid level reaches the MAX line on the reservoir and that it does not fall to more than a quarter below this level.
- If necessary refill with the specified fluid (see TSN).

If the level of the fluid is very low, check the brake/clutch system for leaks.

CHECKING BRAKING SYSTEM

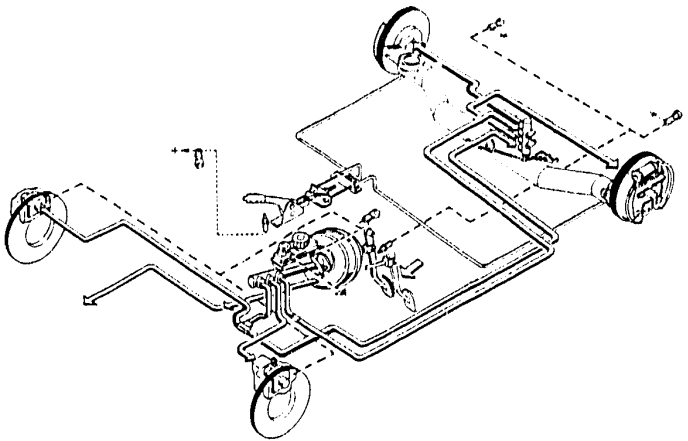

Check the pipes and hoses for damage and corrosion and that they are correctly secured.

Check the system connections for hydraulic fluid leaks. If necessary tighten the unions to the correct torque (GROUP 22).

CHECKING LEVEL OF POWER STEERING FLUID

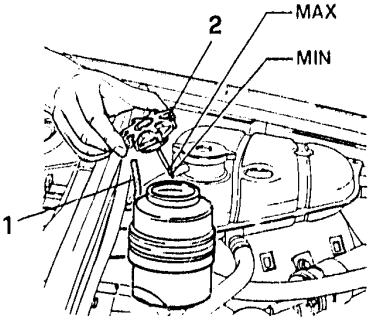

- Park the vehicle on a level surface with the wheels straight.

1. Disconnect the breather hose from the filler cap.
2. Remove the cap and check that the liquid comes up to the MAX mark.

- Otherwise refill the system with the specified oil following the procedure given in GROUP 23.

CHECKING DRIVE SHAFT AND STEERING LINKAGE

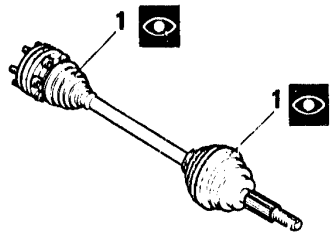

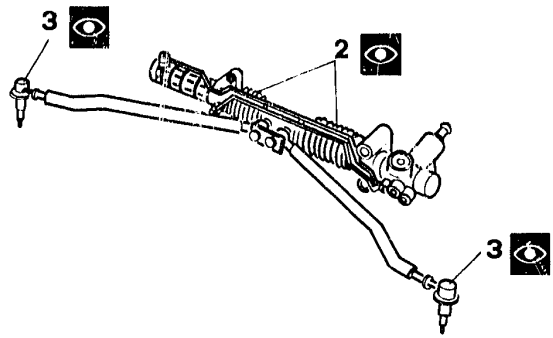

Visually examine the drive shafts for obvious wear and distortion of the components.

1. Check that the boots are not damaged or losing grease. If necessary replace worn or damaged components.
2. Check the condition of the power steering linkage rubber bellows.
3. Ensure that the protective caps on the steering tie-rod joints are undamaged. If necessary substitute the components (see **GROUP 23**).

CHECKING AND ADJUSTMENT OF HANDBRAKE

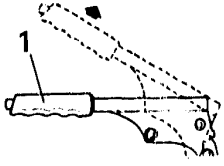

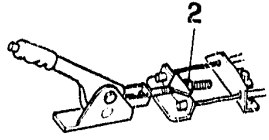

Applied force	**98 N (10 kg)**
Travel	**2 detents**

- Operate the brake pedal a few times to recover the play between the rear brake linings and the drums.

1. Operate the handbrake lever and ensure that the travel is within the specified limits.
2. If adjustment is required, set the travel by using the cable tensioner nut and fork located under the central console.

- When the handbrake is off the brake shoes must be equally at rest
- When the handbrake is operated the cables must slide freely.
- The handbrake warning lamp must come on within one detent of the handbrake ratchet and go out the moment the brake is released.
- The handbrake lever must move smoothly and easily and the pawl must drop into the ratchet without difficulty.

TWIN-CARBURETTOR ENGINES

TCS

- TECHNICAL CHARACTERISTICS AND SPECIFICATIONS
- SPECIFIC TOOLS

TECHNICAL CHARACTERISTICS AND SPECIFICATIONS

REFILLING WITH FLUIDS AND LUBRICANTS ..... 00 - 31
ENGINE MAINTENANCE ..... 00 - 32
Engine unit ..... 00 - 32
Cooling system ..... 00 - 32
Fuel supply ..... 00 - 33
Ignition system ..... 00 - 33
MAINTENANCE OF MECHANICAL UNITS ..... 00 - 34
Braking system ..... 00 - 34
TIGHTENING TORQUES ..... 00 - 34

SPECIFIC TOOLS ..... 00 - 35

TECHNICAL CHARACTERISTICS AND SPECIFICATIONS

REFILLING WITH FLUIDS AND LUBRICANTS

APPLICATION	NAME			QUANTITY
ENGINE	AGIP Nuovo Sint 2000 10W/40	IP SINTIAX Motor Oil 10W/40	SELENIA SPECIAL FORMULA ALFA ROMEO 10W/40	3,6 kg (4,0 l) (*)
GEARBOX-DIFFERENTIAL	AGIP ROTRA /MP 80W/90	IP PONTIAX HD 80W/90	TUTELA W90/M-DA	2,4 kg (2,6 l)
REAR DIFFERENTIAL	AGIP ROTRA /MP 80W/90	IP PONTIAX HD 80W/90	TUTELA W90/M-DA	0,9 kg (1l)
HYDRAULIC STEERING BOX	AGIP DEXRON II	IP DEXRON FLUID II	TUTELA GI/A	1,1l
BRAKES/CLUTCH	AGIP BRAKE FLUID DOT 4	IP AUTO FLUID F.R. DOT4	ALFA ROMEO BRAKE FLUID SUPER DOT4	0,45 kg
COOLING	AGIP ANTIFREEZE EXTRA	IP ANTIFREEZE	ALFA ROMEO ANTIFREEZE (concentrated) ALFA ROMEO CLIMAFLUID PERMANENT -40°C	7,8l 7,3l (**)

(*) The quantity indicated is for periodical substitution
(**) For Sport Wagon 4x4 versions

ENGINE MAINTENANCE

Engine unit

Alternator - pump belt tension	Foce applied to belt	N (kg)	On assembly	400 ÷ 450 (40 ÷ 45)
			Re-tensioning	300 ÷ 350 (30 ÷ 35)
Air-conditioner belt tension	Force applied to belt	N (kg)	On assembly	450 ÷ 500 (45 ÷ 50)
			Re-tensioning	350 ÷ 400 (35 ÷ 40)
Power steering belt tension	Force applied to belt	N (kg)	On assembly	400 ÷ 450 (40 ÷ 45)
			Re-tensioning	300 ÷ 350 (30 ÷ 35)

Cooling system

Test pressure	kPa	bar	kg/cm^2
Pressure cap setting	100 ± 10	1,0 ± 0,1	1,0 ± 0,1
Cooling circuit	107,9	1,08	1,1

ENGINE MAINTENANCE (continued)

Fuel supply

Idle r.p.m. (with engine warm, gearbox in neutral and clutch engaged)	r.p.m.	850 ÷ 1000
Percentage of exhaust CO at idle speed	% in vol.	1,5 ÷ 3,5

Ignition system

Timing (1)	r.p.m.	Angle of advance
Fixed advance	900	8° ± 1°
Maximum advance	4500	34°

(1) Timing values are understood as being with vacuum mixture control pipe disconnected

MAINTENANCE OF MECHANICAL UNITS

Braking system

Hand brake	Lever travel, applying a force of 98 N (10 kg)	2 notches

TIGHTENING TORQUES

Item		Nm	kgm
Bolt securing belt-tensioner	(1)	37 ÷ 46	3,8 ÷ 4,8
	(2)	29 ÷ 35	3,0 ÷ 3,6
Spark plugs		25 ÷ 34	2,6 ÷ 3,5

(1) Value with engine cold
(2) Value with engine hot

SPECIFIC TOOLS

1.824.009.000 (C.2.0054)	Exhaust gas sampling flanges	
1.822.008.000 (A.5.0195)	Toothed spanner for camshaft sprocket locking	
1.824.018.000 (C.2.0131)	Drive belt tensioning tool	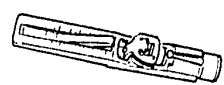

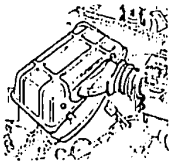



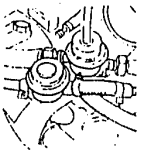

ENGINES WITH ELECTRONIC IGNITION (LE3-JETRONIC)

- ENGINE MAINTENANCE FUEL SYSTEM, IGNITION

ENGINE MAINTENANCE FUEL SYSTEM, IGNITION

REPLACING ENGINE OIL AND FILTER ..... 00 - 36
REPLACING TIMING BELTS ..... 00 - 37
DRIVE BELTS ..... 00 - 43
Tensioning water pump and alternator drive belt ..... 00 - 43
Tensioning air conditioner belt ..... 00 - 44
Tensioning power steering belt ..... 00 - 45
CHECKING FUEL SUPPLY SYSTEM AND SEALING ..... 00 - 46
CHECKING AIR CLEANER CARTRIDGE ..... 00 - 48

REPLACING ENGINE OIL AND FILTER

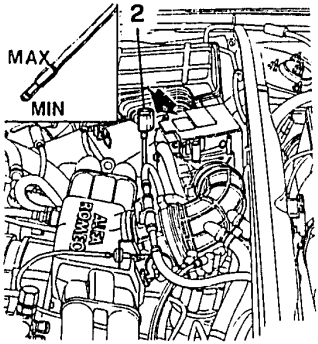

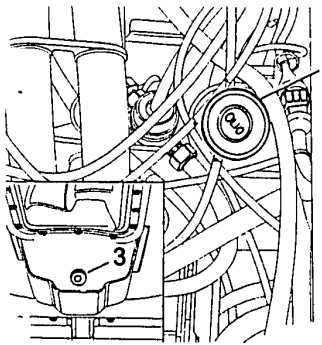

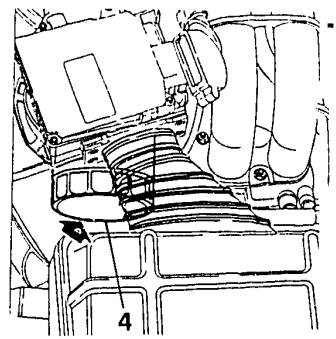

The oil level should be checked with the vehicle on a level surface.
Whitish substances in the oil are caused by coolant leakage.
Low viscosity is due to dilution with fuel.

1. When the engine is hot, remove the oil filler cap.
2. Remove the dipstick.

Before removing the dipstick disconnect it from the minimum oil level sensor.

3. Unscrew the drain pluga and let the oil drain out for at least **15 minutes.**
4. Using the appropriate tool, loosen the oil filter and remove it.

- Clean the drain plug and screw it back onto the sump.
- Wipe the gasket of the new filter with oil and screw it into position by hand.
- Refill the engine with oil (see TSN).
- Check the oil level with the dipstick.
- Replace the filler cap, run the engine at idle speed for about **2 minutes** and then switch off the engine and wait for a few minutes.
- Check the oil level and ensure that there are no leaks.

REPLACING TIMING BELTS

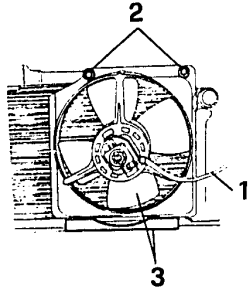

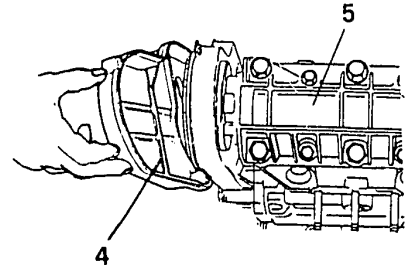

1. Disconnect the wiring from the electric fan.
2. Loosen the screws securing the electric fan.
3. Remove the fan by sliding it out of its groove.

- Remove the spark plugs.
- Remove the alternator and water pump drive belt (see **GROUP 01**).

4. Remove the timing belt covers.
5. Remove the camshaft support covers.

REPLACING TIMING BELTS (continued)

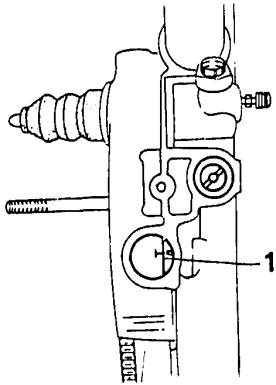

1. Remove the timing check cover and turn the crankshaft until the piston of cylinder number 1 is at TDC in the ignition phase. This position is ensured when the reference mark T on the flywheel is in line with the mark on the rear cover.

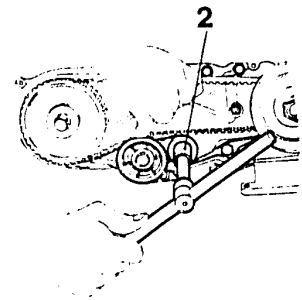

2. Slacken off the nuts securing the belt tensioner and exert pressure on the tightening pulleys in order to overcome the tension on the belts. Lock the nuts in this position.
- Remove first the right-hand toothed belt and then the left from the camshaft and crankshaft pulleys.



REPLACING TIMING BELTS (continued)

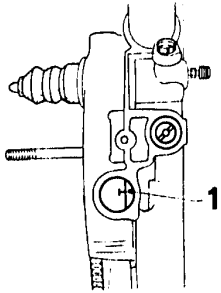

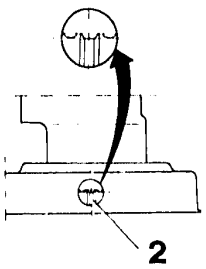

Check engine timing.

1. When the reference mark T is aligned with the mark on the rear cover, turn the crankshaft approximately 45° to prevent the valves from hitting the piston during rotation of the camshaft.
2. Rotate the left-hand timing belt until the tooth and its two adjacent grooves on the left-hand pulley can be seen through the inspection hole on the rear guard of the timing belt.

- Rotate the crankshaft until the mark on the engine rear cover is in line with the reference mark T on the flywheel (with the piston of cylinder No. 1 at TDC in the ignition phase).

REPLACING TIMING BELTS (continued)

1. Holding the shafts in this position, the left-hand timing belt can be fitted on the pulley without involving the use of tools.
2. Loosen the belt tensioner nut to allow the belt tensioner pulley to come into contact with the belt so that the tension created by the spring is exerted on the belt. Tighten the nut.
- Rotate the crankshaft again by about 45° to prevent the valves from hitting the piston when the camshaft is being positioned.
3. Rotate the right-hand camshaft until the tooth and two adjacent grooves on the right-hand pulley can be seen through the inspection hole on the rear guard of the timing pulley.
- Rotate the crankshaft until the mark on the engine rear cover is in line with the reference mark T on the flywheel (with piston of cylinder No. 1 at TDC in the ignition phase).

The right-hand pulley tends to rotate away from its correct position because the camshaft interacts with the intake valve of cylinder No. 3. Use the special toothed spanner N° 1.822.008.000 (A.5.0195) to keep the pulley in the correct position for mounting the belt.

4. Fit the right-hand timing belt onto the pulleys.

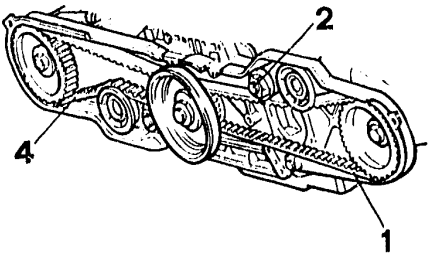

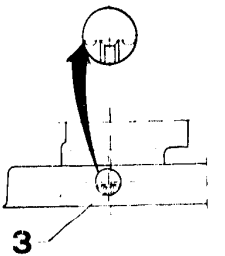

REPLACING TIMING BELTS (continued)

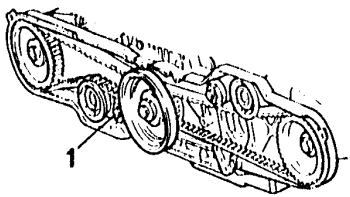

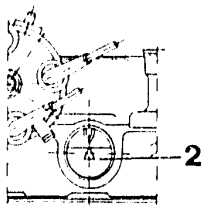

1. Loosen the locknut on the right-hand belt tensioner to allow the belt tensioner pulley to exert the force conferred by the spring onto the belt.Tighten the belt.
- Check the tension on the timing belts beginning from the one on the right-hand side.
2. Rotate the crankshaft on the normal direction of rotation until reference mark ▼ on the flywheel is in line with the reference mark on the engine rear cover.

In this position the four cams of the right-hand camshaft (cylinders 1 and 3) do not touch their respective valve tappets.

REPLACING TIMING BELTS (continued)

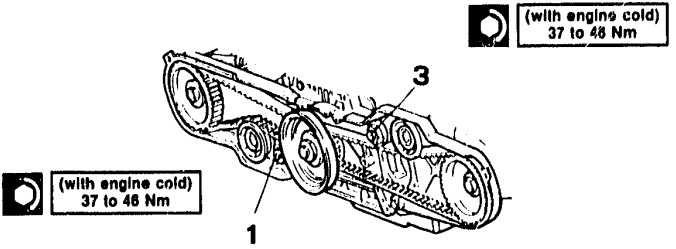

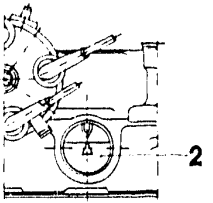

1. Loosen the right-hand belt tensioner nut so that it tensions the timing belt, and then tighten it to the correct torque.

During this operation do not exert any pressure on the arm or on the belt tensioner pulley in order to avoid altering the correct tension load.

2. Turn the engine one revolution in the normal direction of rotation (starting from the previous position with the reference mark ▼ aligned on the engine flywheel).

In this position the four cams of the left-hand camshaft (cylinders 2 and 4) do not touch their respective valve tappets.

3. Loosen the left-hand belt tensioner nut so that it tensions the left-hand timing belt and then re-tighten to the correct torque.

- Once all the operations have been completed check that the timing marks on the pulleys correspond to the rear holes of the timing belt.
- Reassemble the various components, reversing the procedure followed for disassembly and tension the alternator-water pump belt.

DRIVE BELTS

TENSIONING ALTERNATOR AND WATER PUMP DRIVE BELT

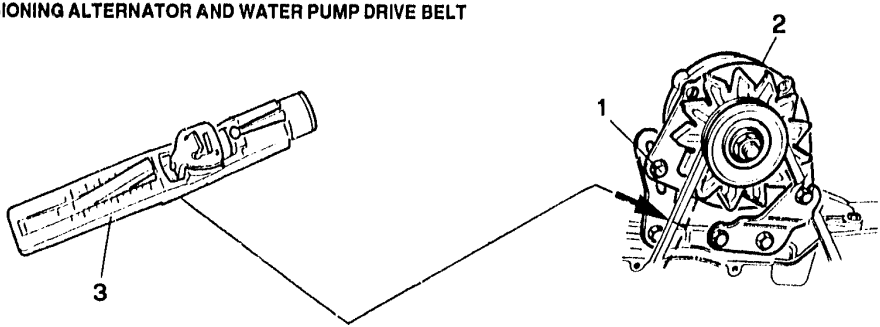

Tensioning the alternator - water pump drive belt	
During assembly	400 - 450 N
Re-tensioning	300 - 350 N

1. Free the alternator mounting bolts.
2. Move the alternator to tighten or slacken the belt.
3. Re-tighten the bolts and with tool N° 1.824.018.000 (C.2.0131) check that the tension values are within the specified limits.

- Repeat the above operations if the tension values are not within the specified limits.

DRIVE BELTS (continued)

TENSIONING AIR CONDITIONER DRIVE BELT

- Loosen the bolts securing the compressor.
- Move the compressor to tighten or slacken the belt.
- Re-tighten the bolts and using tool N° 1.824.018.000 (C.2.0131) check that the the tension values are within the specified limits.

Tensioning the air conditioning drive belt	
During refitting	450 - 500 N
After 1000 - 1500 km	350 - 400 N

- Repeat the above operation if the tensions are not within the specified limits.

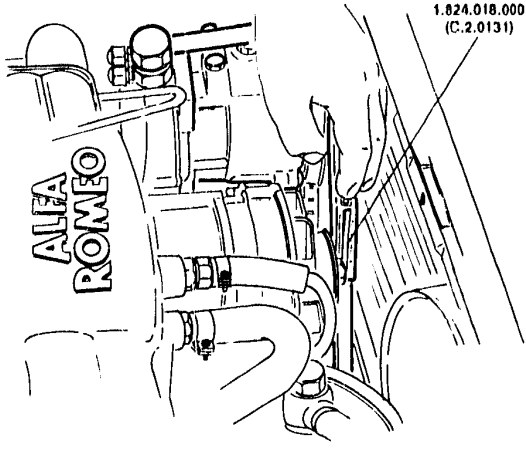

DRIVE BELTS (continued)

TENSIONING POWER STEERING BELT

1.824.018.000
(C.2.0131)

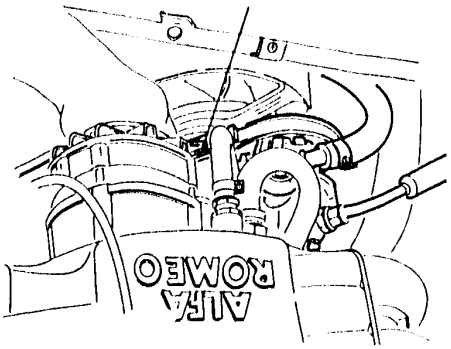

- Loosen the bolts securing the power steering pump.
- Move the power steering pump to tighten or slacken the drive belt.
- Re-tighten the bolts and using tool N° 1.824.018.000 (C.2.0131) check that the tension values are within the specified limits.

Tensioning the power steering belt	
During refitting	400 - 450 N
After 1000 - 1500 km	300 - 350 N

- Repeat the above operations if the tension is not within the prescribed limits.

CHECKING PRESSURE AND SEALING OF FUEL SYSTEM

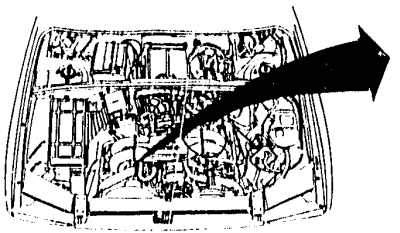

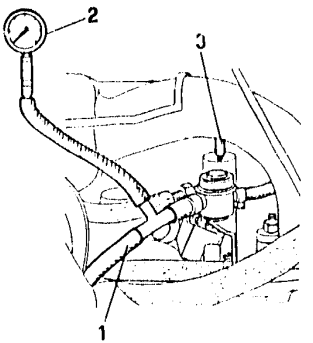

Fuel pressure
280 - 320 kPa (2.8 - 3.2 bars; 2.9 - 3.3 kg/cm^2)

1. Disconnect the fuel delivery pipe downstream of the dashpot.
2. Using a T adapter, connect a pressure gauge between the dashpot and the previously disconnected pipe.
3. Remove the pipe from the pressure regulator. This will prevent any fluctuations in rotation speed from causing irregular readings.

- Start the engine. At idle speed check that the fuel pressure is as specified.
- Re-connect the pipe to the pressure regulator. At idle speed the fuel pressure should drop by about 0.5 bars and then rise again when the throttle valve opens. If this is not the case, check for leaks in the vacuum pipe.

CHECKING PRESSURE AND SEALING OF FUEL SYSTEM (continued)

1. Keeping the pressure gauge connected and the engine at idle speed, squeeze the delivery hose just below the pressure regulator and ensure that the pressure increase reaches the specified value (prevent the pressure from exceeding this value).

Max test pressure
400 kPa (4 bars; 4.1 kg/cm^2)

- At a test pressure of 2.5 bars ensure that the fuel pipes and unions are not leaking.
- If fuel pressure does not reach the above value and no leaks are found, check the filter and/or operation of the pump.

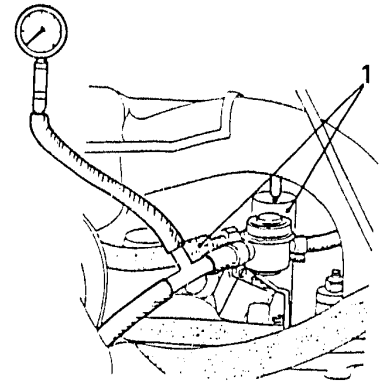

CHECKING AIR CLEANER CARTRIDGE

1. Unhook the spring clips holding the filter housing cover.
2. Lift the cover just enough to remove the filter cartridge without damaging the sleeve.
3. Carefully clean the filter by blowing through with low-pressure compressed air in the opposite direction to the normal flow of air.

- Clean the filter housing.
- Insert the cartridge in its housing with the projecting part facing downwards and replace the cover.

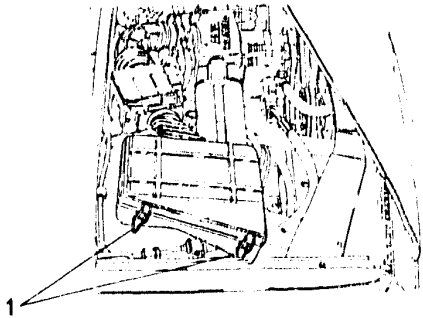

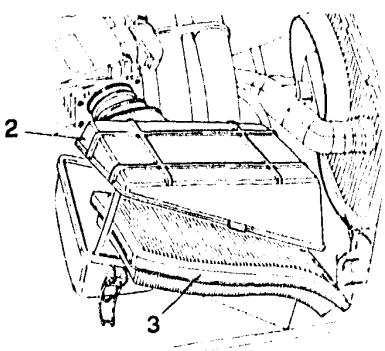

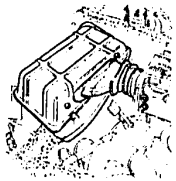



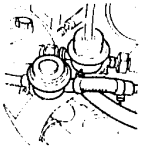

ENGINES WITH ELECTRONIC INJECTION (LE3-JETRONIC)

- ENGINE MAINTENANCE, FUEL SYSTEM, IGNITION (continues)

ENGINE MAINTENANCE, FUEL SYSTEM, IGNITION

CHECKING SEALING OF AIR SUPPLY SYSTEM DOWNSTREAM OF THE AIR FLOW METER ..... 00 - 49
CHECKING AND ADJUSTMENT OF IGNITION TIMING ..... 00 - 50
Specific for models without catalytic converter ..... 00 - 50
Specific for models with catalytic converter ..... 00 - 52
CHECKING AND ADJUSTING IDLE SPEED ..... 00 - 54
CHECKING AND ADJUSTMENT OF EXHAUST EMISSIONS (Specific for models without catalytic converter) ..... 00 - 55
CHECKING AND ADJUSTMENT OF EXHAUST EMISSIONS (Specific for models with catalytic converter) ..... 00 - 57
Sampling downstream of catalytic converter ..... 00 - 57
Sampling upstream of catalytic converter ..... 00 - 59
Alternative solution ..... 00 - 61
CHECKING SEALING OF FUEL VAPOUR EMISSION SYSTEM ..... 00 - 62
REPLACING SPARK PLUGS ..... 00 - 64

CHECKING SEALING OF AIR SUPPLY SYSTEM DOWNSTREAM OF THE AIR FLOW METER

- Ensure that the clamps securing the hoses are correctly tightened.
- Start the engine and run at idle speed. Massage the hoses and sleeve down stream of the air flow meter.
- If the hoses are damaged and allow air to pass to the engine without being measured, the idle speed will vary.
- To facilitate the identification of any leaks in the air supply system, spread a soap solution over the hoses under examination.

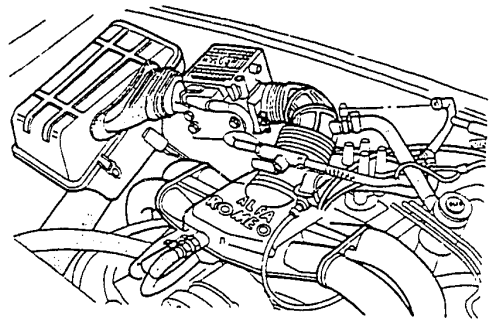

CHECKING AND ADJUSTMENT OF IGNITION TIMING
For versions without catalytic converter

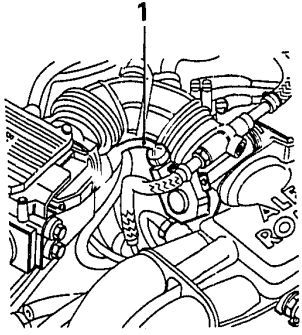

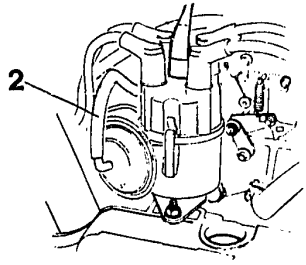

1. Disconnect the connector of the accelerator throttle minimum and maximum opening switch and short-circuit the three pins on the wiring side.
- Disconnect the plastic cover on the engine rear cover.
- Start the engine and run to normal operating temperature.
2. Disconnect the vacuum hose from the ignition distributor.
- Using a stroboscopic gun, check that the mark on the engine rear cover is aligned with the mark on the engine flywheel.

Fixed advance angle	**8° ± 1° (1)**

(1) Value measured independently from the r.p.m.

NOTA **When the pins of the minimum and maximum throttle valve opening switch are connected to earth the control unit operates the power module of the coil to obtain a fixed advance of 8° independently from the engine r.p.m.**

CHECKING AND ADJUSTING IGNITION TIMING
For versions without catalytic converter (continued)

- If the specified alignment is not obtained adjust the timing as follows:

1. Loosen the nut securing the distributor.
2. Rotate the body of the distributor anticlockwise to advance or clockwise to retard.

- Tighten the nut securing the distributor.
- Check that the fixed advance is within the specified limits.

3. Re-connect the distributor to the vacuum advance hose.

- Refit the plastic cover on the engine rear cover.
- Reconnect the connector of the throttle valve minimum and maximum opening switch.

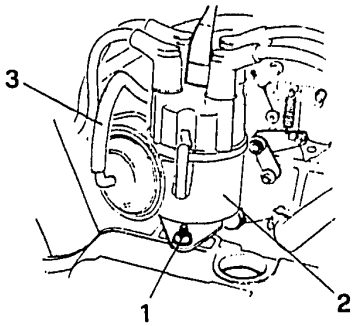

Fixed advance angle	8° ± 1°

CHECKING AND ADJUSTMENT OF IGNITION TIMING (continued)
For versions with catalytic converter

- Connect the clamps of a strobe gun to the battery and the pick-up to the high voltage cable of cylinder number 1.
- Connect an electronic rev counter to the engine by attaching the clamps to the coil power supply and the pick-up to the high voltage cable of the coil.
- Remove the plastic cover from the engine rear cover.
- Start the engine and run to normal operating temperature.

1. Disconnect the vacuum advance hose from the distributor and using the strobe gun, check that at idle speed the reference mark on the engine rear cover is aligned with the mark I engraved on the engine flywheel.
2. Using the strobe gun check that at an idle speed of 5250 r.p.m., the reference mark on the engine rear cover is in line with the reference mark II engraved on the engine flywheel.

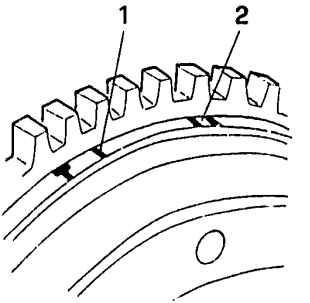

Fixed advance angle	8° ± 1° at 900 - 1050 r.p.m.
Maximum advance angle	32° at 5250 r.p.m.

CHECKING AND ADJUSTMENT OF IGNITION TIMING
For versions with catalytic converter (continued)

- If the the allgnment is incorrect adjust the timing as follows:
- Loosen the nut securing the distributor.
- Rotate the body of the distributor anticlockwise to advance and clockwise to retard.
- Tighten the nut securing the distributor.
- Check that the fixed advance is within the specified limits.
- Re-connect the distributor to the vacuum advance hose.
- Refit the plastic cover on the engine rear cover.

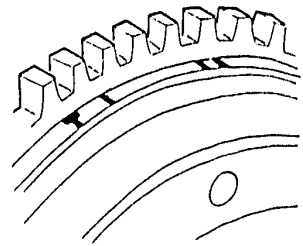

Fixed advance angle	8° ± 1° at 900 - 1050 r.p.m.
Maximum advance angle	32° a 5250 r.p.m.

CHECKING AND ADJUSTING IDLE SPEED

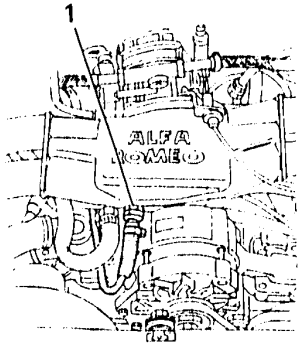

Idle speed	
Versions without catalytic converter	800 - 900 r.p.m.
Versions with catalytic converter	900 - 1050 r.p.m.

- Connect a rev counter to the engine.
- Connect a toxic gas extractor to the end of the exhaust pipe.
- Start the engine an run to normal operating temperature (engine oil temperature: **75 - 80°C**).
- With the gearbox in neutral, the ancillary equipment disengaged and the electric fan off, check that the engine idle speed is within the specified limits.
- If the correct values are not obtained, adjust the minimum idle speed as follows:

1. Loosen the counter nut and rotate the screw until the correct engine idle r.p.m. is obtained.

- Tighten the counter nut.

CHECKING AND ADJUSTMENT OF EXHAUST EMISSIONS
For versions without catalytic converter

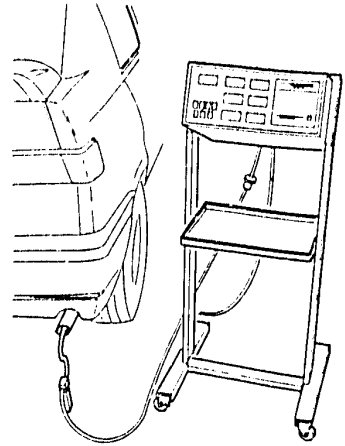

Switch on the workshop toxic gas extractor and run the engine of the vehicle to normal operating temperature.

- Using an appropriate gas analyzer and with the engine running at idle r.p.m., check that the percentage of CO leaving the exhaust pipe is below the prescribed limits.

ermitted % of CO (in volume)	0,7 - 1,7

CHECKING AND ADJUSTMENT OF EXHAUST EMISSIONS
For versions without catalytic converter (continued)

- If the percentage of CO exceeds the permitted limits, proceed as follows:

1. Remove the seal plug.
2. Carefully adjust the adjustment screw until the prescribed values are obtained.

- When the operation has been completed fit a new plug.
- Check that the idle speed is within the prescribed limits and proceed to "Checking idle speed" if not.

The exhaust CO percentage must only be adjusted if the air flow meter and/or electronic control unit has been substituted.

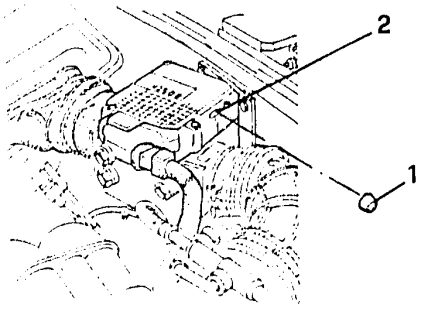

CHECKING AND ADJUSTMENT OF EXHAUST EMISSIONS (continued)
For versions with catalytic converter

SAMPLING DOWNSTREAM OF CATALYTIC CONVERTER

Switch on the workshop toxic gas extractor, start the engine of the vehicle and run to normal operating temperature.

- Using an appropriate exhaust gas analyzer and with the engine at idle speed, check that the exhaust CO and unburnt hydrocarbon level (HC) is below the specified limits.

permitted CO percentage (in volume)		≤0.5
HC	p.p.m.	≤50

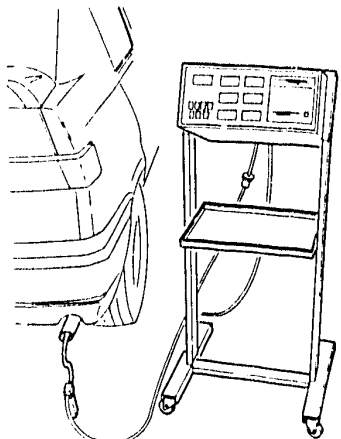

CHECKING AND ADJUSTMENT OF EXHAUST EMISSIONS
For versions with catalytic converter

SAMPLING DOWNSTREAM OF CATALYTIC CONVERTER (CONTINUED)

- If the percentage of CO and HC is above the permitted limits, proceed as follows:

1. Remove the seal cap.
2. Carefully adjust the regulation screw until the correct values are obtained.

- When the operation has been completed install a new seal cap.
- Check that the idle speed is within the specified limits otherwise consult the "Checking idle speed" section.

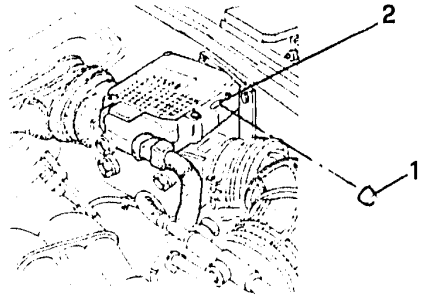

- The percentage of exhaust CO must only be adjusted if necessary and only when the air flow meter and/or control unit have been substituted.

- For vehicles produced for the Swiss market, regulation of the exhaust emissions (%CO) is carried out during production and as a result the regulation screw is closed and cannot be tampered with.

CHECKING AND ADJUSTMENT OF EXHAUST EMISSIONS
For versions with catalytic converter (continued)

SAMPLING UPSTREAM OF CATALYTIC CONVERTER

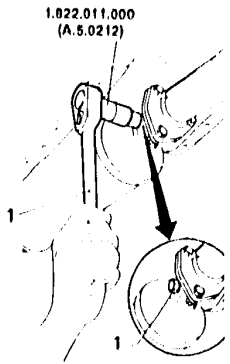

- Disconnect the wiring from the lambda probe.
1. Using spanner N° 1.822.011.000 (A.5.0212) unscrew the cap located at the entrance to the catalytic exhaust.
2. Fit tool N° 1.824.007.000 (C.2.0051) to the union used for sampling the exhaust gas and connect it to the analyzer with a hose.

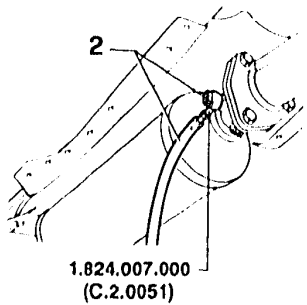

- Start the engine and check that at idle speed the percentage of CO and the quantity of unburnt hydrocarbons are below the permitted limits.

%CO in volume		0.6 - 1.0
HC	p.p.m.	≤ 300

CHECKING AND ADJUSTMENT OF EXHAUST EMISSIONS
For versions with catalytic converter

SAMPLING UPSTREAM OF CATALYTIC CONVERTER (CONTINUED)

- If the percentage of CO and HC is above the permitted limits, proceed as follows:

1. Remove the seal cap.
2. Carefully adjust the regulation screw until the correct values are obtained.

- When the operation has been completed install a new seal cap.
- Check that the idle speed is within the specified limits otherwise consult the "Checking idle speed" section.

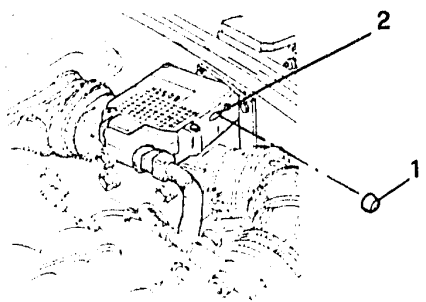

- The percentage of exhaust CO must only be adjusted if necessary and only when the air flow meter and/or control unit have been substituted.

- For vehicles produced for the Swiss market, regulation of the exhaust emissions (%CO) is carried out during production and as a result the regulation screw is closed and cannot be tampered with.

CHECKING AND ADJUSTMENT OF EXHAUST EMISSIONS
For versions with catalytic converter (continued)

ALTERNATIVE SOLUTION

- This is a simplified solution applicable to engines with a FIAT TESTER socket fitted to the electrical wiring. Use the wiring shown in the diagram.
- Run the engine to normal operating temperature.

1. Remove the connector from the minimum and maximum switch device on the wiring side.
2. Remove the 3-way connector from the equipment.

- Insert the connector of the equipment into the 3-way connector of the diagnosis equipment.
- Check the condition of the LED diode and adjust the potentiometer located on the air flow meter in its sealed housing. Optimal conditions are obtained when the LED pulsates equally in the "ACCESO" and "SPENTO" conditions. After checking this condition reseal the "CO" screw housing.

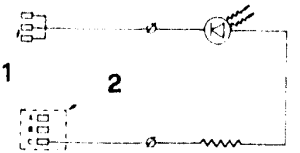

For vehicles produced for the Swiss market, regulation of the exhaust emissions (%CO) is carried out during production and as a result the regulation screw is closed and cannot be tampered with.

CHECKING SEALING OF FUEL VAPOUR EMISSION SYSTEM

To check the tightness of the system use tool N° 1.824.013.000 (C.2.0126) and N° 1.824.020.000 (C.2.0101) composed of a pressure gauge (A), needle adjustment valve (B) and pipes with a "T" union (C):

- Fully tighten the cocks of the pressure reducer N° 1.824.013.000 (C.2.0126) and valve B.

1. Connect the union of tool N° 1.824.013.000 (C.2.0126) to a source of compressed air.
2. Connect hose C to the air inlet valve located in the luggage compartment.
3. By acting on the pressure reducer N° 1.824.013.000 (C.2.0126) adjust the fuel system pressure to approx. 0.2 bars (20 kPa).
4. Slightly open valve B.
5. Acting on reducer N° 1.824.013.000 (C.2.0126) adjust the pressure in the fuel vapour system to 0.025 bars (2.49 kPa) corresponding to 250 mm on the column of the pressure gauge A.

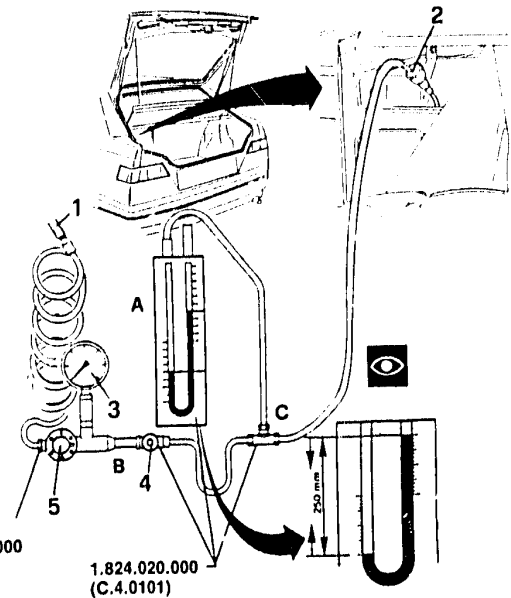

CHECKING SEALING OF FUEL VAPOUR EMISSION SYSTEM (continued)

1. Wait for approximately 2 minutes and tighten valve B, thus setting the circuit pressure to the value given above.
2. Measure the drop in pressure within the system which should not exceed 0.0012 bars (0.12 kPa) in 10 minutes, corresponding to 12 mm on the column of the pressure gauge.

- If the drop in pressure exceeds the specified value, locate the leaks by spraying soapy water onto the union and connections of the circuit. Air bubbles will show up any leaks.
- If necessary replace the faulty components and repeat the check.

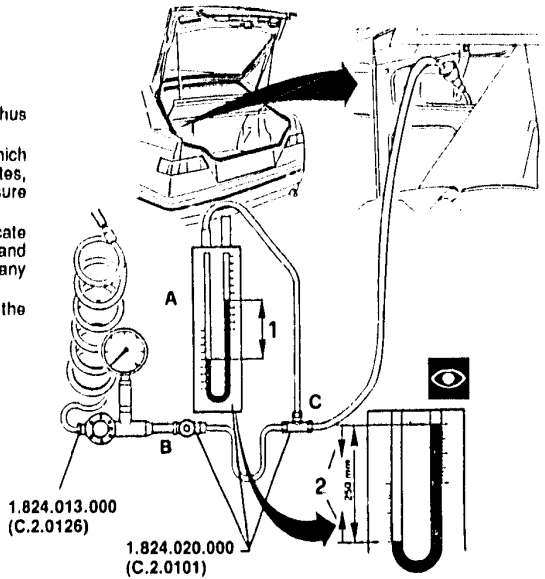

REPLACING SPARK PLUGS

GOLDEN LODGE
25HL

- The the spark plugs fitted as standard are of the surface discharge type with four radial electrodes and one central electrode. This type of spark plug does not require regulation of the electrode gaps.

The use of spark plugs of a different type or size may seriously damage the engine and alter the level of toxic gasses in the exhaust.
Replace the spark plugs if the ceramic insulator is cracked or if the electrodes are excessively worn.

- When the engine is cold, remove the spark plug leads.
- Blow into the plug recesses to clear them of dirt.
- Remove the spark plugs.
- Using the specified oil, lubricate the threads on the new spark plugs and tighten them to the correct torque.
- Ensure that there is a good mechanical and electrical connection between the spark plug leads and connectors.
- Connect the leads to the spark plugs.

Firing order:	1 - 3 - 2 - 4

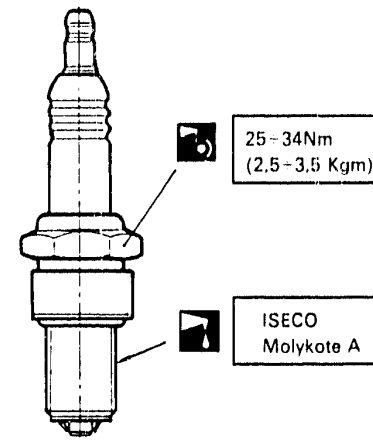

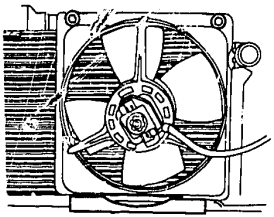

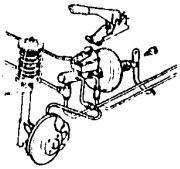

ENGINES WITH ELECTRONIC INJECTION (LE3-JETRONIC)

- COOLING MAINTENANCE
- MAINTENANCE OF MECHANICAL GROUPS

COOLING MAINTENANCE

CHECKING LEVEL OF ENGINE COOLING LIQUID ..... 00 - 65
CHECKING SEALING OF COOLING SYSTEM ..... 00 - 66
Checking seal of pressurized cap ..... 00 - 67

MAINTENANCE OF MECHANICAL GROUPS

CHECKING LEVEL AND REPLACING GEARBOX AND DIFFERENTIAL OIL ..... 00 - 68
CHECKING LEVEL AND REPLACING REAR DIFFERENTIAL OIL (Specific for 4x4 models) ..... 00 - 69
GREASING DRIVE SHAFT SLEEVE (Specific for 4x4 models) ..... 00 - 70
CHECKING WHEEL TOE-OUT ..... 00 - 71
CHECKING LEVEL OF CLUTCH/BRAKE FLUID ..... 00 - 72
CHECKING BRAKING SYSTEM ..... 00 - 73
CHECKING POWER STEERING FLUID LEVEL ..... 00 - 74
CHECKING DRIVE SHAFTS AND STEERING TIE-RODS ..... 00 - 75
CHECKING REAR DRIVE SHAFTS (Specific for 4x4 models) ..... 00 - 76
CHECKING AND ADJUSTMENT OF HANDBRAKE ..... 00 - 77

CHECKING COOLANT LEVEL

- When the engine is cold check that the level of coolant in the expansion tank is between the MIN and MAX reference marks.
- If not, refill with the specified liquid (see TSN).

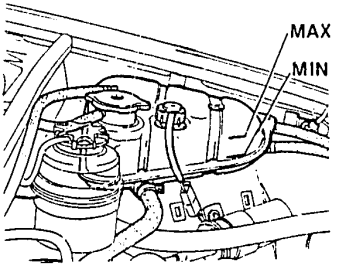

CHECKING SEALING OF COOLING SYSTEM

Cooling circuit test pressure
107.9 kPa (1.08 bars; 1.1 kg/cm^2)

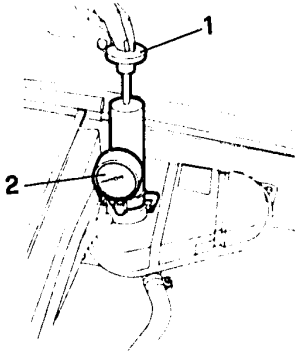

- Unscrew the expansion tank pressure cap.

1. Attach the pressure tester to the expansion tank filler opening.
2. Pressurize the circuit and ensure that the pressure reading on the tester remains constant at the set value.

CHECKING SEALING OF COOLING SYSTEM

CHECKING SEALING OF PRESSURIZED CAP

Pressure cap setting
100 ± 10 kPa (1 ± 0.1 bars; 1 ± 0.1 kg/cm^2)

1. Screw the connector onto the test gauge and attach it to the expansion tank pressure cap.
2. Pump up the pressure and ensure that the release valve opens at the correct pressure.

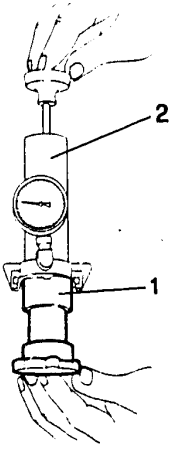

CHECKING LEVEL AND REPLACING GEARBOX-DIFFERENTIAL OIL

CHECKING LEVEL OF GEARBOX-DIFFERENTIAL OIL

- Unscrew the filler cap and check that the oil level comes up to the lower rim of the filler neck. Wipe the cap clean and screw it back on.

SUBSTITUTING GEARBOX-DIFFERENTIAL OIL

1. When the engine is warm, remove the drain plug.
2. Remove the filler cap.
- Let the oil drain off for at least **15 minutes**. Clean the plug and screw it back on.
- Refill with the specified type and quantity of oil and screw the cap back on (see TSN).

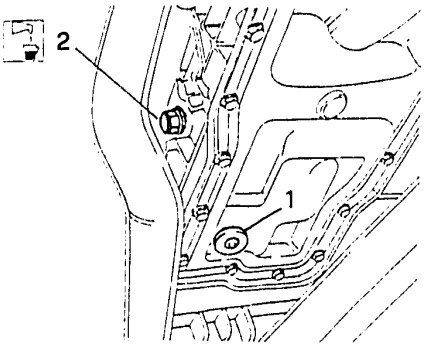

CHECKING LEVEL AND REPLACING REAR DIFFERENTIAL OIL (For 4x4 versions)

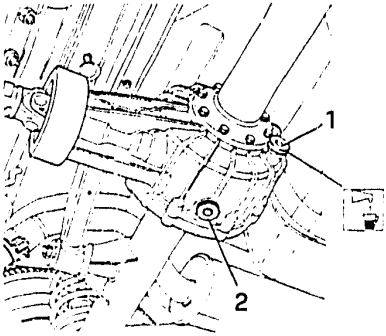

CHECKING OIL LEVEL

- Unscrew the filler cap and check that the oil level comes up to the lower rim of the filler neck. Wipe the cap clean and screw it back on.

REPLACING OIL

1. When the oil is warm remove the filler cap from the rear differential casing.
2. Remove the drain plug
- Let the oil drain off for at least **15 minutes**. Clean the plug and screw it back on.
- Refill with the specified type and quantity of oil and screw the cap back on (see TSN).

GREASING THE DRIVE SHAFT SLEEVE (for 4x4 models)

1. Raise the vehicle and grease the drive shaft sleeve using the specified grease

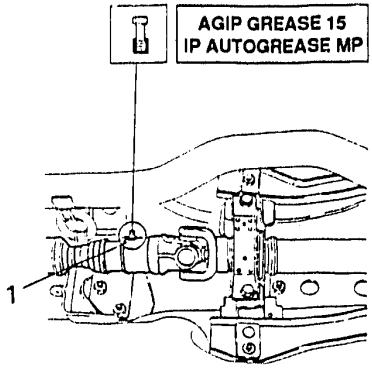

CHECKING WHEEL TOE-OUT

L = 1/2 M + 2 ± 1
H = M + 4 ± 2

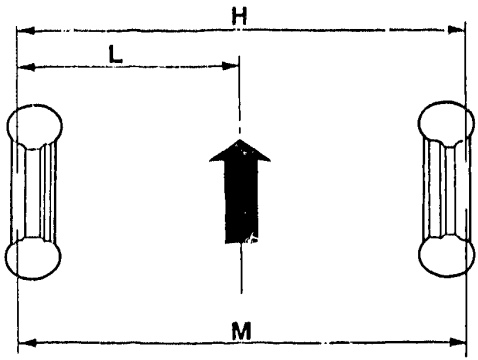

- Check the vehicle trim (see **GROUP 21**).
- Working from one side of the suspension and adjust the steering tie-rod to the indicated value (L).
- Adjust the rod on the opposite side unit value H is obtained.
- Tighten the adjustment nuts on the tie-rods to the correct torque.

55 - 69 Nm (5.6 - 7 kgm)

- Correct the position of the steering wheel rungs by removing the steering wheel and refitting it allowing a tollerance of ± 5' on the central rung.

CHECKING LEVEL OF BRAKE/CLUTCH FLUID

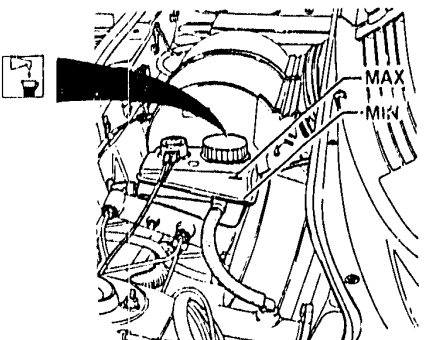

NOTE When checking the fluid level the vehicle must be on a level surface.

- Check that the fluid reaches the MAX level on the side of the reservoir and that it is no more than a quarter of the way down below this level.
- If necessary refill with the specified fluid (see TSN).

If the fluid level is very low, check that the brake/clutch system is not leaking.

CHECKING BRAKING SYSTEM

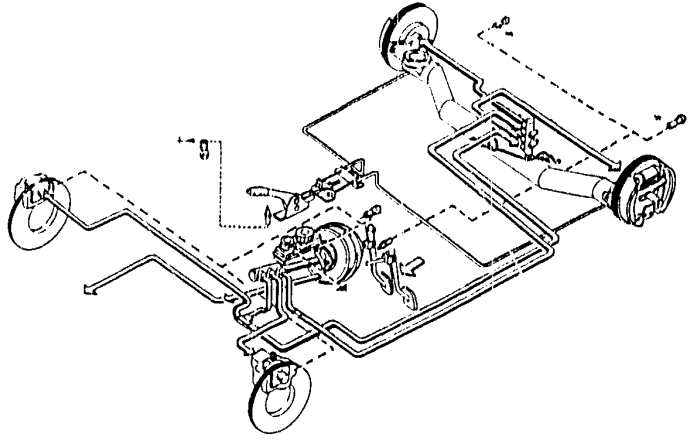

Examine the brake pipes and hoses for damage or corrosion and ensure that they are correctly fitted.

Check the brake unions for leakage of hydraulic fluid. If necessary tighten the unions to the correct torque (see GROUP 22).

CHECKING LEVEL OF POWER STEERING FLUID

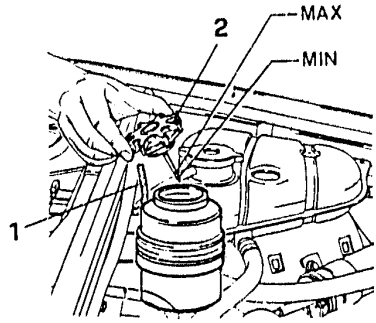

- Park the vehicle on a level surface with the wheels straight.

1. Disconnect the breather pipe from the filler cap.
2. Remove the cap and check that the liquid comes up to the MAX mark.

- Otherwise refill the system with the specified oil following the procedure given in GROUP 23.

CHECKING DRIVE SHAFT AND STEERING LINKAGE

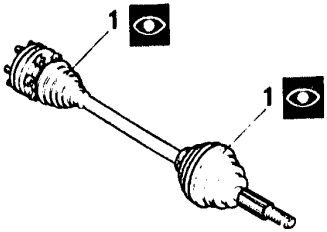

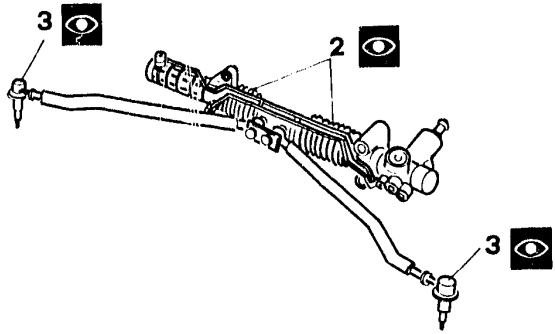

Visually examine the drive shafts for evident wear and component distortion.

1. Check that the protective bellows are not damaged and not leaking grease. If necessary substitute worn or damaged components.
2. Check the condition of the power steering rack bellows.
3. Check that the protective boots on the steering tie-rod joints are undamaged. Replace the components if necessary (see **GROUP 23**).

CHECKING REAR DRIVE SHAFTS
(For 4x4 versions)

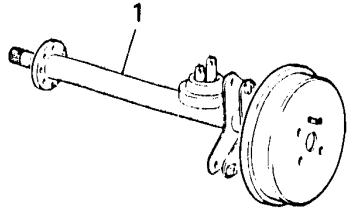

- Visually examine for superficial damage.

1. Check that the flared tubes are not dented or nicked especially on the surfaces attached to the outer casing and to the brake-shoe holder disc.

- Check the bearings on the half-shafts by slowly rotating them. If the bearings are in good condition there should be no noise or resistance.

CHECKING AND ADJUSTING HANDBRAKE

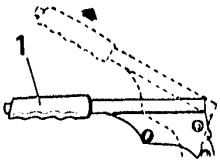

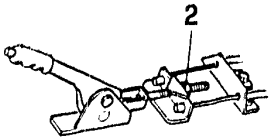

Applied force	98 N (10 kg)
Travel	2 detents

- Operate the pedal a few times to take up the backlash.

1. Operate the handbrake lever and check that its travel corresponds to the specified number of ratchet detents.
2. If necessary slacken the lock nut and adjust the cable tensioning nut located under the central console in the passenger compartment.

- With the handbrake fully off, the brake shoes must be free.
- When the handbrake is operated the cables must run freely.
- The handbrake-on warning light must come on within one detent of the ratchet and go out as soon as the handbrake is released.
- The handbrake lever must operate easily and smoothly and the pawl must drop into the ratchet without difficulty as soon as the lever is pulled.

TCS

ENGINES WITH ELECTRONIC INJECTION (LE3-JETRONIC)

- TECHNICAL CHARACTERISTICS AND SPECIFICATIONS
- SPECIFIC TOOLS

TECHNICAL CHARACTERISTICS AND SPECIFICATIONS
REFILLING WITH FLUIDS AND LUBRICANTS .....00 - 78
ENGINE MAINTENANCE.....00 - 79
Engine unit.....00 - 79
Cooling system .....00 - 79
Fuel system.....00 - 80
Ignition system .....00 - 80
MAINTENANCE OF MECHANICAL GROUPS.....00 - 81
Braking system .....00 - 81
TIGHTENING TORQUES.....00 - 81

SPECIFIC TOOLS.....00 - 82

TECHNICAL CHARACTERISTICS AND SPECIFICATIONS

REFILLING WITH FLUIDS AND LUBRICANTS

APPLICATION	NAME			QUANTITY
ENGINE	AGIP Nuovo Sint 2000 10W/40	IP SINTIAX Motor Oil 10W/40	SELENIA SPECIAL FORMULA ALFA ROMEO 10W/40	3,6 kg (4,0 l) (*)
GEARBOX-DIFFERENTIAL	AGIP ROTRA /MP 80W/90	IP PONTIAX HD 80W/90	TUTELA W90/M-DA	2,4 kg (2,6 l)
REAR DIFFERENTIAL	AGIP ROTRA /MP 80W/90	IP PONTIAX HD 80W/90	TUTELA W90/M-DA	0,9 kg (1l)
HYDRAULIC STEERING BOX	AGIP DEXRON II	IP DEXRON FLUID II	TUTELA GI/A	1,1l
BRAKES/CLUTCH	AGIP BRAKE FLUID DOT 4	IP AUTO FLUID F.R. DOT4	ALFA ROMEO BRAKE FLUID SUPER DOT4	0,45 kg
COOLING	AGIP ANTIFREEZE EXTRA	IP ANTIFREEZE	ALFA ROMEO ANTIFREEZE (concentrated) ALFA ROMEO CLIMAFLUID PERMANENT -40°C	7,8l 7,3l (**)

(*) The quantity indicated is for periodical substitution
(**) For Sport Wagon 4x4 and Sport Wagon 1.7 IE versions

ENGINE MAINTENANCE

Engine unit

Alternator - pump belt tension	Force applied to belt	N (kg)	On assembly	400 ÷ 450 (40 ÷ 45)
			Re-tensioning	300 ÷ 350 (30 ÷ 35)
Air-conditioner belt tension	Force applied to belt	N (kg)	On assembly	450 ÷ 500 (45 ÷ 50)
			Re-tensioning	350 ÷ 400 (35 ÷ 40)
Power steering belt tension	Force applied to belt	N (kg)	On assembly	400 ÷ 450 (40 ÷ 45)
			Re-tensioning	300 ÷ 350 (30 ÷ 35)

Cooling system

Test pressure	kPa	bar	kg/cm^2
Pressure cap setting	100 ± 10	1,0 ± 0,1	1,0 ± 0,1
Cooling circuit	107,9	1,08	1,1

ENGINE MAINTENANCE (continued)

Fuel system

		Without catalytic converter	With catalytic converter
Engine idle r.p.m. (with engine warm, gearbox in neutral and clutch engaged) r.p.m.		800 ÷ 900	900 ÷ 1050
Percentage of exhaust CO at idle speed % in vol.	On leaving exhaust pipe	0,7 ÷ 1,7	≤ 0,5
	Upstream of catalytic converter	-	0,6 ÷ 1,0
Unburnt hydrocarbons HC	On leaving exhaust pipe	-	≤ 50 p.p.m.
	Upstream of catalytic converter	-	≤ 300 p.p.m.

Ignition system

Timing (1)	Without catalytic converter	With catalytic converter
Fixed advance	8° ± 1° (2)	8° ± 1° (2)
Maximum advance	-	32° at 5250 r.p.m.

(1) Timing values are understood as being with vacuum mixture control pipe disconnected
(2) Value measured independently from r.p.m.

MAINTENANCE OF MECHANICAL UNITS

Braking system

Handbrake	Lever travel, applying a force of 98 N (10 kg)	2 notches

TIGHTENING TORQUES

Item		Nm	kgm
Bolt securing belt-tensioner	(1) (2)	37 ÷ 46 29 ÷ 35	3,8 ÷ 4,8 3,0 ÷ 3,6
Spark plugs		25 ÷ 34	2,6 ÷ 3,5

(1) Value with engine cold
(2) Value with engine hot

SPECIFIC TOOLS

1.822.008.000 (A.5.0195)	Toothed spanner for camshaft pulley locking	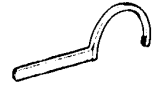
1.822.011.000 (A.5.0212)	Socket for exhaust gas sampling union	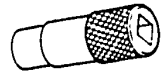
1.824.007.000 (C.2.0051)	Exhaust gas sampling union	
1.824.018.000 (C.2.0131)	Drive belt tensioning tool	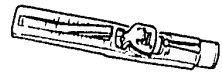
1.824.013.000 (C.2.0126)	Pressure reducer	
1.824.020.000 (C.4.0101)	Pressure measuring instrument	

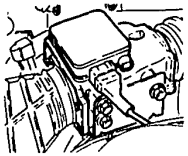

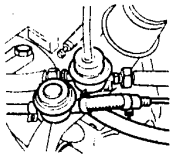

ENGINES WITH ELECTRONIC INJECTION (16 VALVES)

- ENGINE MAINTENANCE, FUEL SYSTEM, IGNITION

ENGINE MAINTENANCE, FUEL SYSTEM, IGNITION

REPLACING ENGINE OIL AND FILTER ..... 00 - 83
REPLACING TIMING BELTS ..... 00 - 85
DRIVE BELTS ..... 00 - 91
Tensioning alternator and water pump drive belt ..... 00 - 91
Tensioning conditioner drive belt ..... 00 - 92
Tensioning power steering belt ..... 00 - 93
CHECKING FUEL SUPPLY PRESSURE AND SEALING ..... 00 - 94
CHECKING AIR CLEANER FILTER ..... 00 - 96
CHECKING SEALING OF AIR SUPPLY SYSTEM DOWNSTREAM OF THE AIR-FLOW METER ..... 00 - 97

REPLACING ENGINE OIL AND FILTER

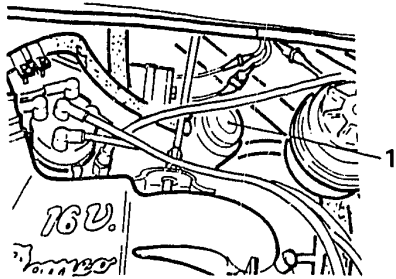

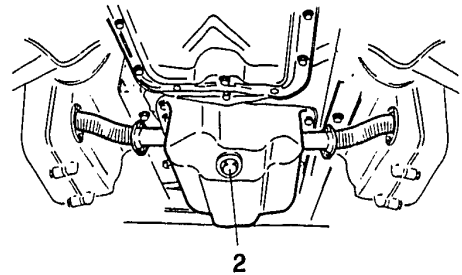

1. When the engine is hot remove the oil filler cap.
2. Remove the oil drain plug from the sump and let the oil drain into a container for at least 15 minutes.

Any whitish deposits in the oil are due to coolant leaks. Identify the causes and rectify. Low oil viscosity is due to fuel contaminating the oil.

REPLACING ENGINE OIL AND FILTER (continued)

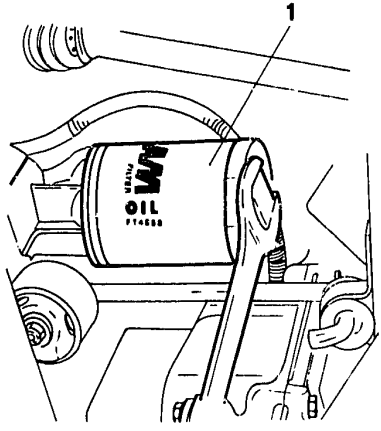

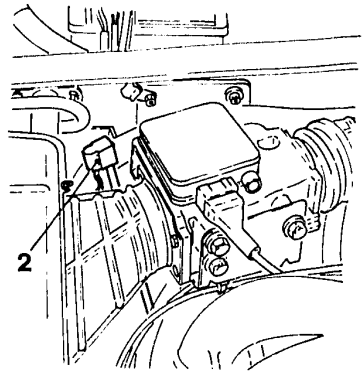

1. Remove the oil filter using the appropriate spanner.
- When all the oil has drained out, clean the drain plug and screw it back onto the sump.
- Oil the gasket of a new filter and tighten the filter it by hand.
- Refill the engine with oil of the specified type (see TSN).
2. Check the oil level with the dipstick.

Before withdrawing the dipstick disconnect the oil level warning light sensor.

REPLACING TIMING BELTS

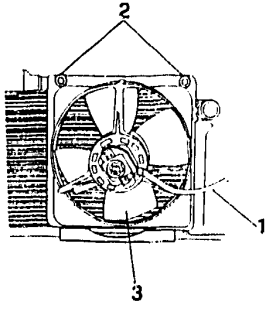

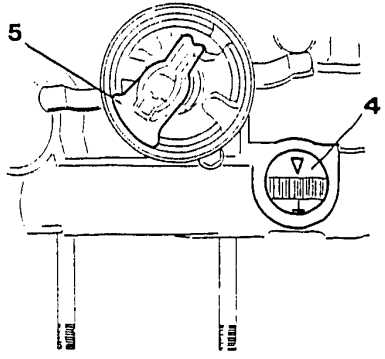

1. Disconnect the electric cables from the electric fan.
2. Disconnect the screws securing the electric fan.
3. Remove the fan by sliding it out of its groove.
- Remove the spark plugs.
- Remove the water pump and alternator drive belt (see **GROUP 01**).
- Remove the timing belt covers.
4. Rotate the crankshaft until piston number 1 is at TDC in the ignition phase. In this position the timing mark "T" on the flywheel will be aligned to the index on the engine rear cover.
5. Ensure that the distributor rotating brush is facing cylinder number 1. Turn the two camshafts to the neutral position (valves closed).

REPLACING TIMING BELTS (continued)

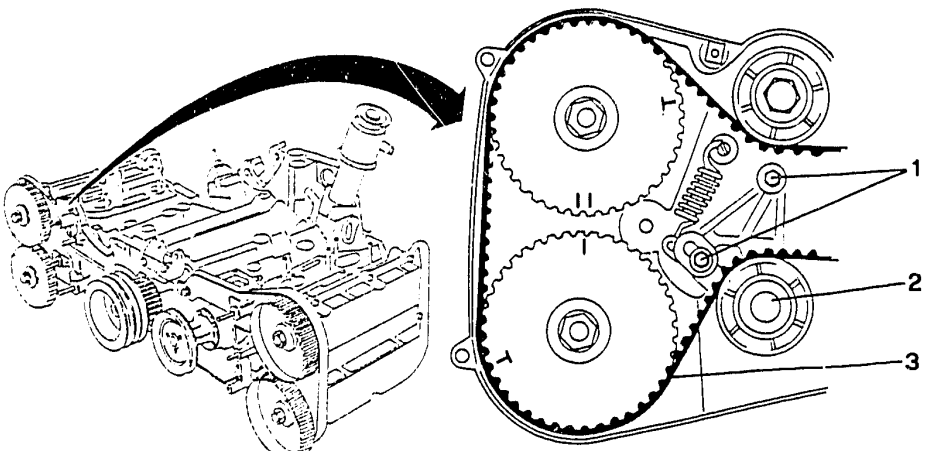

1. Loosen the nuts securing the right-hand belt tensioner.
2. Exert a pressure on the pulley to overcome the spring tension load. Lock the belt tensioner in position with the belt slack.
3. Slip off the right-hand timing belt and then repeat the procedure for the left-hand cylinder head belt.

⇩

REPLACING TIMING BELTS (continued)

1. Check that cylinder number 1 is at TDC in the ignition phase. In this position the flywheel timing mark "T" will be in line with the index on the cover.
- Rotate the crankshaft clockwise (as seen from the rear end) through approximately 45° to lower pistons 1 and 2 and prevent the valves from striking the pistons when the camshafts are rotated.

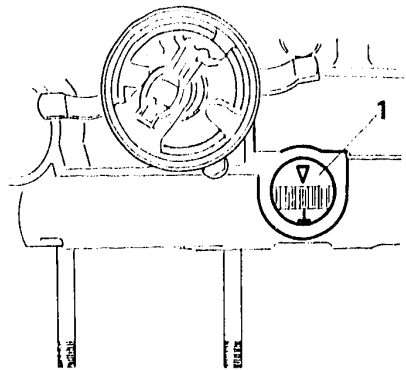

REPLACING TIMING BELTS (continued)

1. Position the left-hand camshaft so that the mark on the exhaust pulley lines up between the two marks on the intake pulley.
- Realign the timing mark "T" with the fixed index (piston number 1 at TDC in the ignition phase) and while maintaining the shafts in this position fit the left-hand timing belt over the pulleys.
2. Loosen the nut securing the belt tensioner and let the tensioner exert a pressure, conferred by the spring, on the belt.
- Repeat the preceding operations to set the timing of the right- hand head.
- Rotate the engine a few times in its direction of operation to allow the belts to settle into their final positions.

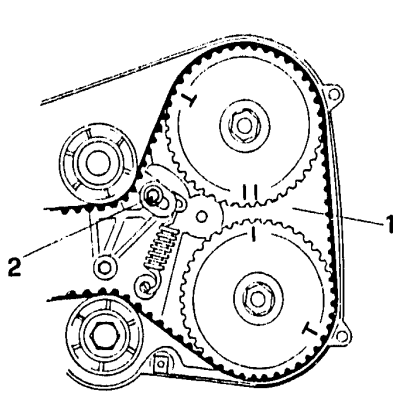

REPLACING TIMING BELTS (continued)

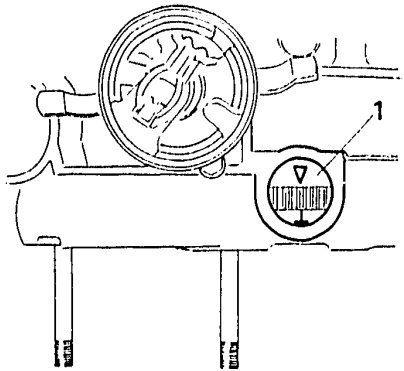

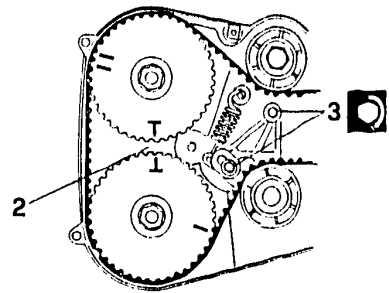

37 – 46 Nm
(3,8 – 4,7 kgm)

- Rotate the crankshaft until piston number 1 is at TDC in the ignition phase (flywheel timing mark T).
1. Turn the crankshaft again in its normal direction of rotation until the flywheel timing mark ▼ lines up with the index.
2. Check that the two pulleys are in line with the "T" marks (right-hand camshaft at rest, no cams engaged).
3. Loosen the nuts securing the right-hand belt tensioner and then re-tighten to the correct torque.

Do not exert any pressure on the belt tensioner during this operation as the pressure value may be altered.

REPLACING TIMING BELTS (continued)

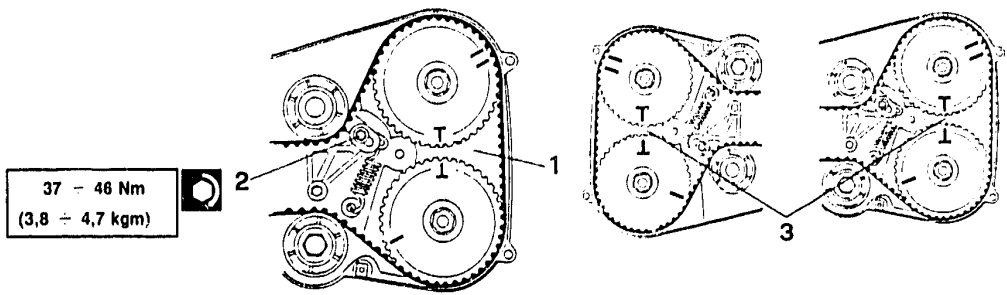

Do not exert any pressure on the belt tensioner during this operation as the pressure value may be altered.

- Starting from the position corresponding to mark "▼" on the flywheel, rotate the crankshaft one complete turn in the normal direction of rotation until the flywheel mark "▼" is realigned to the index (left-hand camshaft at rest, no cam engaged).
1. Check that the two pulleys are aligned with the reference marks "T".
2. Loosen the belt tensioner nuts and re-tighten them to the correct torque.
- Once the operations on the right and left cylinder heads have been completed, turn the crankshaft until the piston of cylinder number 1 is brought to TDC in the ignition phase ("T" mark on flywheel).
3. Check that the timing marks on the pulleys are aligned.
- Reassemble components by reversing the procedure followed for disassembly and tension the alternator - water pump drive belt.

DRIVE BELTS
TENSIONING ALTERNATOR AND WATER PUMP BELT

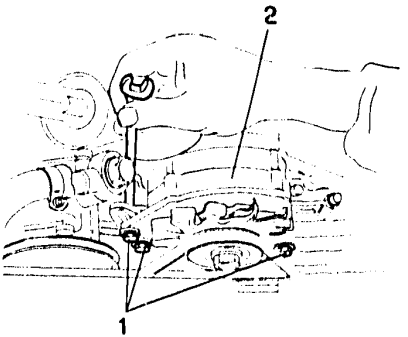

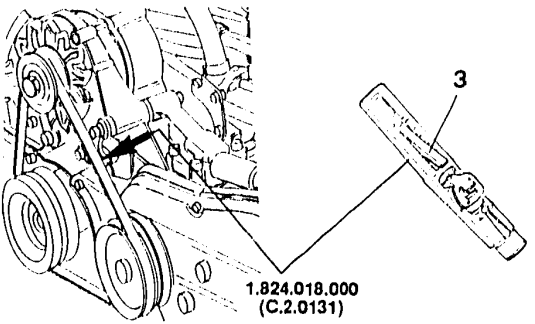

1. Loosen the bolts securing the alternator.
2. Move the alternator to tighten or slacken the belt.
3. Tighten the bolts and use tool N° 1.824.018.000 (C.2.0131) to check that the the tension values are correct.

Water pump - alternator belt tension	
During assembly	400 - 450 N
Re-tensioning	300 - 350 N

- Repeat the above operations if the tension is not within the specified limits.

DRIVE BELTS (continued)
TENSIONING AIR CONDITIONER BELT

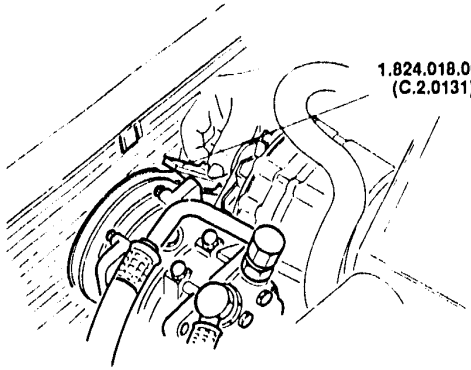

Air conditioner belt tension	
During assembly	450 - 500 N
After 1000 - 1500 km	350 - 400 N

- Loosen the bolts securing the compressor.
- Move the compressor to tighten or slacken the belt.
- Tighten the bolts and use tool N° 1.824.018.000 (C.2.0131) to check that the values are within the specified limits.
- Repeat the above operations if the tension is not within the specified limits.

DRIVE BELTS (continued)
TENSIONING POWER STEERING BELT

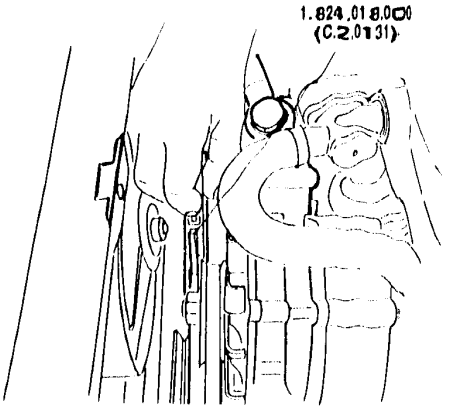

Power steering pump belt tension	
During assembly	400 - 450 N
After 1000 - 1500 km	300 - 350 N

- Loosen the bolts securing the power steering pump.
- Move the power steering pump to tighten or slacken the belt.
- Tighten the bolts and use tool N° 1.824.018.000 (C.2.0131) to check that the tension values are within the specified limits.
- Repeat the above operations if the tension is not within the specified limits.

CHECKING PRESSURE AND SEALING OF FUEL SYSTEM

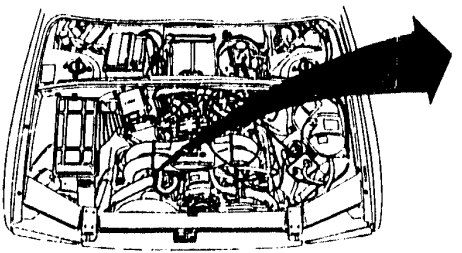

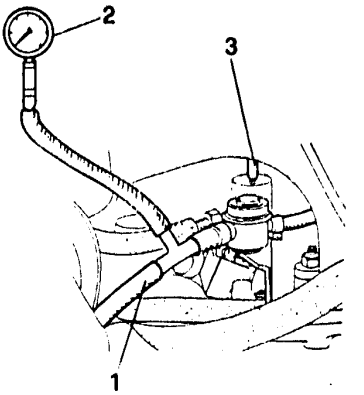

1. Disconnect the fuel delivery pipe downstream of the dashpot.
2. Using a T adaptor, connect a pressure gauge between the dashpot and the previously disconnected pipe.
3. Remove the pipe from the pressure regulator. This will prevent any fluctuations in rotation speed from causing irregular readings.

- Start the engine. At idle speed check that the fuel pressure is as specified.

Fuel pressure
280 - 320 kPa (2.8 - 3.2 bars; 2.9 - 3.3 kg/cm^2)

- Re-connect the pipe to the pressure regulator. At idle speed the fuel pressure should drop by about 0.5 bars and then rise again when the throttle valve opens. If this is not the case, check for leaks in the vacuum pipe.

CHECKING PRESSURE AND SEALING OF FUEL SYSTEM (continued)

1. Keeping the pressure gauge connected and the engine at idle speed, squeeze the delivery hose just below the pressure regulator and ensure that the pressure increase reaches the specified value (prevent the pressure from exceeding this value).

Max test pressure
400 kPa (4 bars; 4.1 kg/c m^2)

- At a test pressure of 2.5 bars ensure that the fuel pipes and unions are not leaking.
- If fuel pressure does not reach the above value and no leaks are found, check the filter and/or operation of the pump.

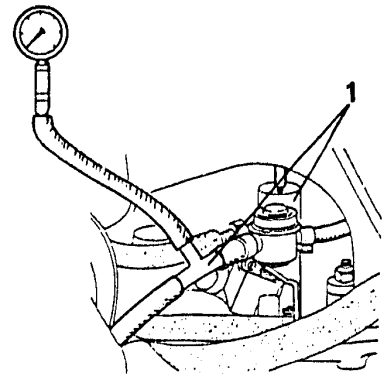

CHECKING AIR CLEANER CARTRIDGE

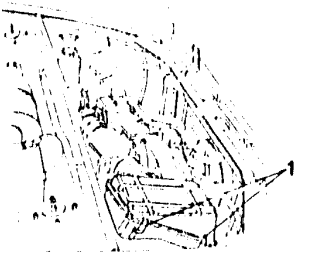

1. Unhook the spring clips holding the filter housing cover.
2. Lift the cover just enough to remove the filter cartridge without damaging the sleeve.
3. Carefully clean the filter by blowing through with low-pressure compressed air in the opposite direction to the normal flow of air.

- Clean the filter housing.
- Insert the cartridge in its housing with the projecting part facing downwards and replace the cover.

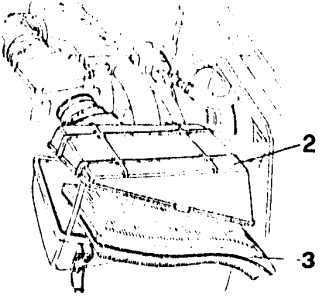

CHECKING SEALING OF AIR SUPPLY SYSTEM DOWNSTREAM OF THE AIR FLOW METER

- Ensure that the clamps securing the hoses are correctly tightened.
- Start the engine and run at idle speed. Massage the hoses and sleeve down stream of the air flow meter.
- If the hoses are damaged and allow air to pass to the engine without being measured, the idle speed will vary.
- To facilitate the identification of any leaks in the air supply system, spread a soap solution over the hoses under examination.

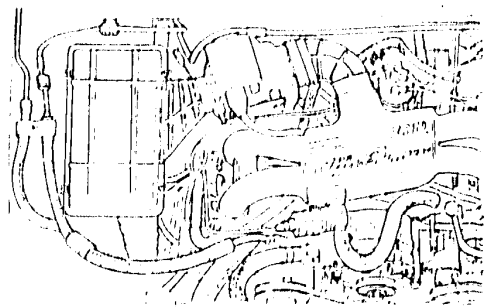

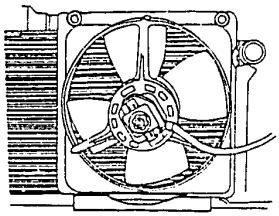

ENGINES WITH ELECTRONIC INJECTION (16 VALVES)

- ENGINE MAINTENANCE, FUEL SYSTEM, IGNITION (continues)
- COOLING MAINTENANCE

ENGINE MAINTENANCE, FUEL SYSTEM, IGNITION

CHECKING AND ADJUSTMENT OF EXHAUST EMISSIONS (Specific for models without catalytic converter) ....00 - 98
CHECKING AND ADJUSTMENT OF EXHAUST EMISSIONS (Specific for models with catalytic converter) .....00 - 100
Sampling downstream of catalytic converter.....00 - 100
Sampling upstream of catalytic converter.....00 - 101
CHECKING SEALING OF FUEL VAPOUR EMISSION SYSTEM .....00 - 102
REPLACING SPARK PLUGS .....00 - 104

COOLING MAINTENANCE

CHECKING LEVEL OF ENGINE COOLING LIQUID..... .....00 - 105
CHECKING SEALING OF COOLING SYSTEM .....00 - 106
Checking sealing of pressurized cap.....00 - 107

CHECKING AND ADJUSTMENT OF EXHAUST EMISSIONS
For versions without catalytic converter.

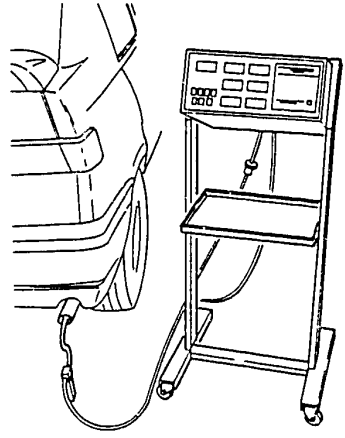

Switch on the workshop exhaust gas extractor, start the engine on the vehicle and run to normal operating temperature.

- Using an appropriate exhaust analyzer and with the engine at idle speed, ensure that the level of CO and unburnt hydrocarbons (HC) is below the specified limits.

% of CO allowed (in volume)	0.5 - 1.5

CHECKING AND ADJUSTMENT OF EXHAUST EMISSIONS
For models without catalytic converter (continued)

- If the percentage of CO exceeds the permitted limit, proceed as follows:

1. Remove the seal cap.
2. Carefully adjust the regulation screw until the correct values are obtained.

- When the operations have been completed install a new seal cap.
- Later check that the idle speed is within the prescribed limits. If this is not the case consult the section "Checking idle speed r.p.m.".

The percentage of exhaust CO must only be carried out if necessary only when the air flow meter and/or the electronic control unit have been substituted.

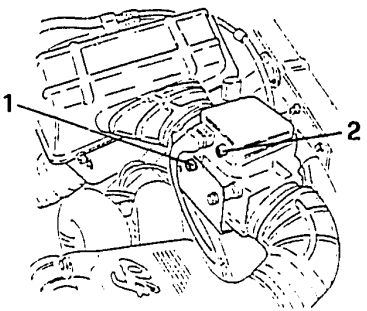

CHECKING AND ADJUSTMENT OF EXHAUST EMISSIONS (continued)
For versions with catalytic converter

SAMPLING DOWNSTREAM OF CATALYTIC CONVERTER

Switch on the workshop toxic gas extractor, start the engine of the vehicle and run to normal operating temperature.

- Using an appropriate exhaust gas analyzer and with the engine at idle speed, check that the exhaust CO and unburnt hydrocarbon level HC is below the specified limits.

%CO in volume		≤ 0.5
HC	p.p.m.	≤ 50

- If the values measured exceed the specified limits the cause may be found in the supply components, lambda probe and/or an inefficient catalytic exhaust.

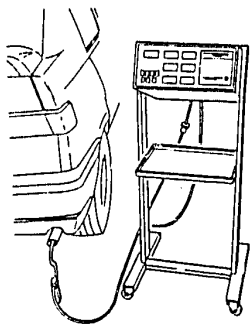

The Motronic ML4.1 system in this arrangement does not permit the exhaust CO to be adjusted. If this check results in values which are not within the specified limits and the vehicle shows no signs of mechanical faults it is probable that the will be a fault in the electrical circuits. In this case it is necessary to follow the diagnostic procedure using the appropriate tester. If this also results in anomalous values the faulty components must be substituted.

CHECKING AND ADJUSTMENT OF EXHAUST EMISSIONS
For versions with catalytic converter (continued)

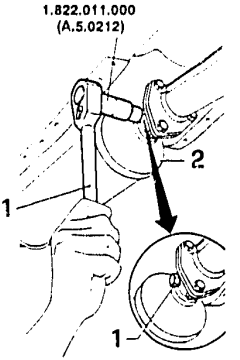

SAMPLING DOWNSTREAM OF THE CATALYTIC CONVERTER

- Disconnect the wiring from the lambda probe.

1. Using spanner N° 1.822.011.000 (A.5.0212) unscrew the cap located at the entrance to the catalytic exhaust.
2. Fit tool N° 1.824.007.000 (C.2.0051) to the union used for sampling the exhaust gas and connect it to the analyzer with a hose.

- Start the engine and check that at idle speed the percentage of CO and the quantity of unburnt hydrocarbons is below the permitted limits.

%CO in volume		0.6 - 1.0
HC	p.p.m.	≤ 300

- If the values measured exceed the specified limits the cause may be found in the supply components, lambda probe and/or an inefficient catalytic exhaust.

The Motronic ML4.1 system in this arrangement does not permit the exhaust CO to be adjusted. If this check results in values which are not within the specified limits and the vehicle shows no signs of mechanical faults it is probable that the will be a fault in the electrical circuits. In this case it is necessary to follow the diagnostic procedure using the appropriate tester. If this also results in anomalous values the faulty components must be substituted.

CHECKING SEALING OF FUEL VAPOUR EMISSION SYSTEM

To check the tightness of the system use tool N° 1.824.013.000 (C.2.0126) and N° 1.824.020.000 (C.2.0101) composed of a pressure gauge (A), needle adjustment valve (B) and "T" union pipes (C):

- Fully tighten the cocks of the pressure reducer N° 1.824.013.000 (C.2.0126) and valve B.

1. Connect the union of tool N° 1.824.013.000 (C.2.0126) to a source of compressed air.
2. Connect hose C to the air inlet valve located in the luggage compartment.
3. By acting on pressure reducer N° 1.824.013.000 (C.2.0126) adjust the fuel system pressure to approx. 0.2 bars (20 kPa).
4. Slightly open valve B.
5. Acting on reducer N° 1.824.013.000 (C.2.0126) adjust the fuel vapour system pressure to the value of 0.025 bars (2.49 kPa) corresponding to 250 mm on column of the pressure gauge A.

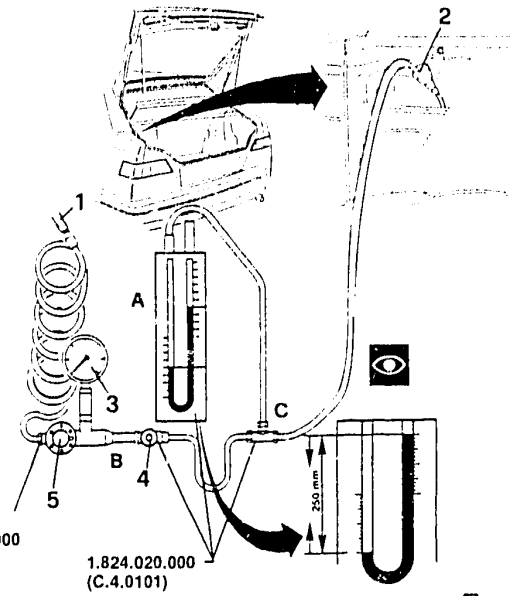

CHECKING SEALING OF FUEL VAPOUR EMISSION SYSTEM (continued)

1. Wait for approximately 2 minutes and tighten valve B, thus setting the circuit pressure to the value given above.
2. Measure the drop in pressure within the system which should not exceed 0.0012 bars (0.12 kPa) in 10 minutes, corresponding to 12 mm on the column of the pressure gauge.

- If the drop in pressure exceeds the specified value, locate the leaks by spraying soapy water onto the union and connections of the circuit. Air bubbles will show up any leaks.
- If necessary replace the faulty components and repeat the check.

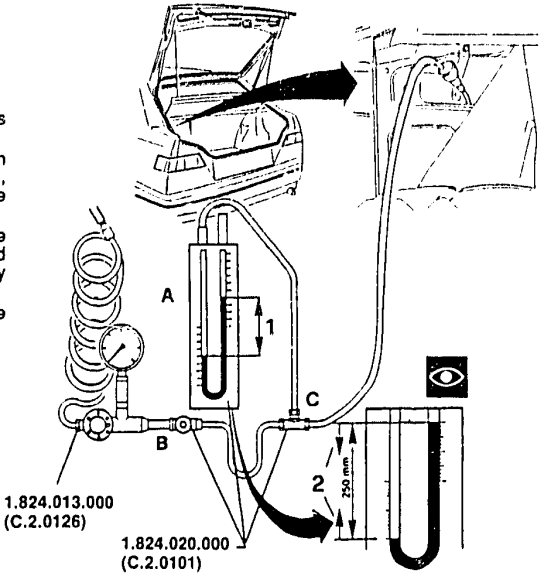

REPLACING SPARK PLUGS

- The spark plugs fitted as standard are of the surface discharge type with four radial electrodes and one central electrode. This type of spark plug does not require regulation of the electrode gaps.

The use of spark plugs of a different type or size may seriously damage the engine and alter the level of toxic gasses in the exhaust.
Replace the spark plugs if the ceramic insulator is cracked or if the electrodes are excessively worn.

- When the engine is cold remove the plug leads.
- Blow into the plug recesses to clear them of dirt.

1. Remove the spark plugs using tool N° 1.822.107.000 and N° 1.822.103.000.

- Using the specified oil, lubricate the threads on the new plugs and tighten them to the correct torque.

25 - 34 Nm (2.5 - 3.5 kgm)

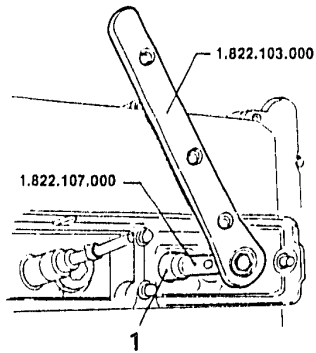

Without catalytic converter	BOSCH F7LTC
With catalytic converter	NGK PFR6B

- Ensure that there is a good mechanical and electrical connection between the plug leads and connectors.
- Re-connect the plug leads.

Firing order:	1 - 3 - 2 - 4

CHECKING COOLANT LEVEL

- When the engine is cold check that the level of coolant in the expansion tank is between the MIN and MAX reference marks.
- If not, refill with the specified liquid (see TSN).

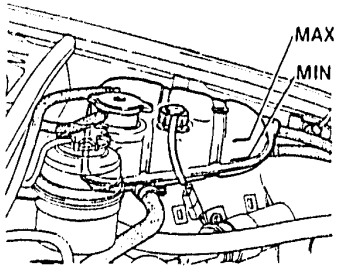

CHECKING SEALING OF COOLING SYSTEM

Cooling circuit test pressure
107.9 kPa (1.08 bars; 1.1 kg/cm^2)

- Unscrew the expansion tank pressure cap.

1. Attach the pressure tester to the expansion tank filler opening.
2. Pressurize the circuit and ensure that the pressure reading on the tester remains constant at the set value.

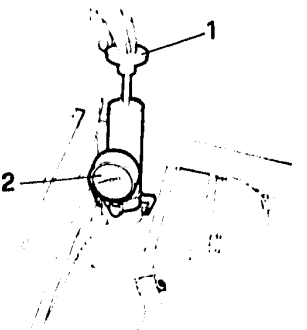

CHECKING SEALING OF COOLING SYSTEM (continued)

CHECKING SEALING OF PRESSURIZED CAP

Pressure cap setting
100 ± 10 kPa (1 ± 0.1 bars; 1 ± 0.1 kg/cm^2)

1. Screw the connector onto the test gauge and attach it to the expansion tank pressure cap.
2. Pump up the pressure and ensure that the release valve opens at the correct pressure.

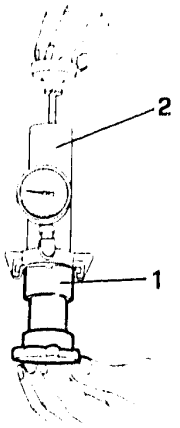

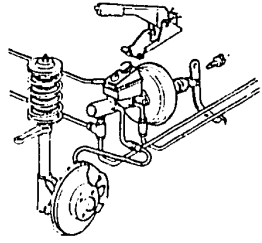

ENGINES WITH ELECTRONIC INJECTION (16 VALVES)

- MAINTENANCE OF MECHANICAL GROUPS

MAINTENANCE OF MECHANICAL GROUPS

CHECKING LEVEL AND REPLACING GEARBOX AND DIFFERENTIAL OIL....00 - 108
CHECKING LEVEL AND REPLACING REAR DIFFERENTIAL OIL (Specific for 4x4 models)....00 - 109
GREASING DRIVE SHAFT SLEEVE (Specific for 4x4 models)....00 - 110
CHECKING WHEEL TOE-OUT....00 - 111
CHECKING LEVEL OF BRAKE/CLUTCH FLUID....00 - 112
CHECKING BRAKING SYSTEM....00 - 113
CHECKING LEVEL OF POWER STEERING FLUID....00 - 114
CHECKING DRIVE SHAFTS AND STEERING TIE-RODS....00 - 115
CHECKING REAR DRIVE SHAFTS (Specific for 4x4 models)....00 - 116
CHECKING AND ADJUSTMENT OF HANDBRAKE....00 - 117

CHECKING LEVEL AND REPLACING GEARBOX-DIFFERENTIAL OIL

CHECKING LEVEL OF GEARBOX-DIFFERENTIAL OIL

- Unscrew the filler cap and check that the oil level comes up to the lower rim of the filler neck. Wipe the cap clean and screw it back on.

SUBSTITUTING GEARBOX-DIFFERENTIAL OIL

1. When the engine is warm, remove the drain plug.
2. Remove the filler cap.

- Let the oil drain off for at least 15 **minutes**. Clean the plug and screw it back on.
- Refill with the specified type and quantity of oil and screw the cap back on (see TSN).

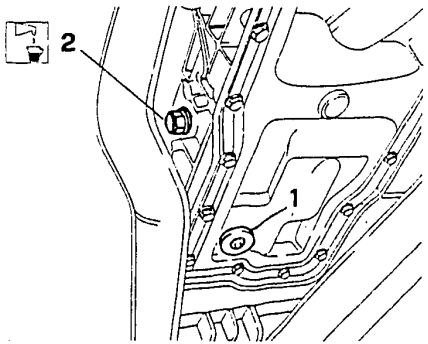

CHECKING LEVEL AND REPLACING REAR DIFFERENTIAL OIL (For 4x4 versions)

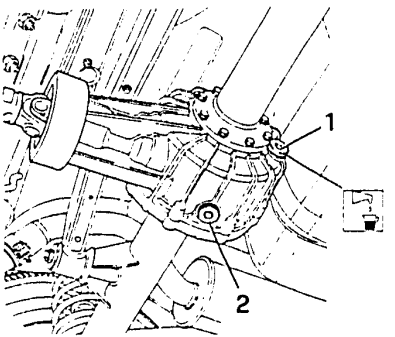

CHECKING OIL LEVEL

- Unscrew the filler cap and check that the oil level comes up to the lower rim of the filler neck. Wipe the cap clean and screw it back on.

REPLACING OIL

1. When the oil is warm remove the filler cap from the rear differential casing.
2. Remove the drain plug.

- Let the oil drain off for at least **15 minutes**. Clean the plug and screw it back on.
- Refill with the specified type and quantity of oil and screw the cap back on (see TSN).

GREASING THE DRIVE SHAFT SLEEVE (for 4x4 models)

AGIP GREASE 15
IP AUTOGREASE MP

1. Raise the vehicle and grease the drive shaft sleeve using the specified grease.

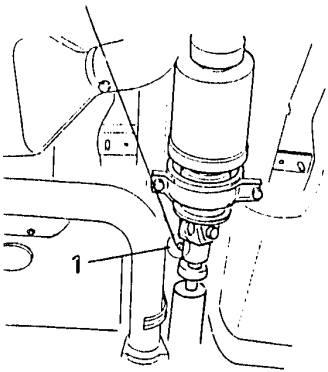

CHECKING WHEEL TOE-OUT

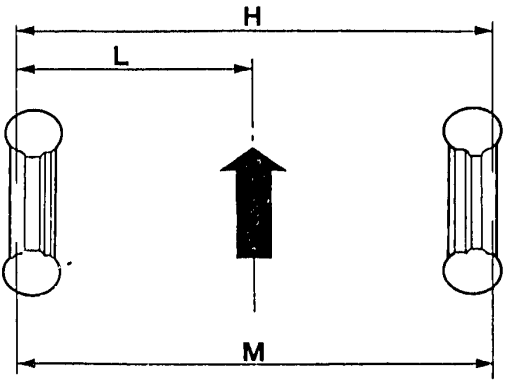

L = 1/2 M + 2 ± 1
H = M + 4 ± 2

- Check the vehicle trim (see **GROUP 21**).
- Working from one side of the suspension, adjust the steering tie-rod to the indicated value (L).
- Adjust the rod on the opposite side unit value H is obtained.
- Tighten the adjustment nuts on the tie-rods to the correct torque.

55 - 69 Nm (5.6 - 7 kgm)

- Correct the position of the steering wheel rungs by removing the steering wheel and refitting it allowing a tollerance of ± 5° on the central rung.

CHECKING LEVEL OF BRAKE/CLUTCH FLUID

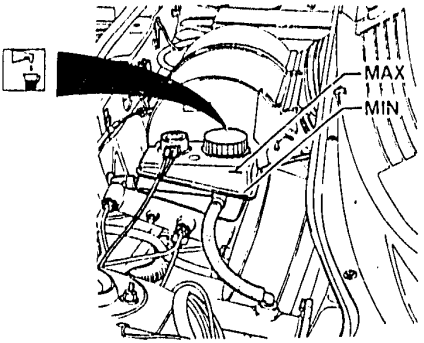

NOTE **When checking the fluid level the vehicle must be on a level surface.**

- Check that the fluid reaches the MAX level on the side of the reservoir and that it is no more than a quarter of the way down below this level.
- If necessary refill with the specified fluid (see TSN).

If the fluid level is very low, check that the brake/clutch system is not leaking.

CHECKING BRAKING SYSTEM

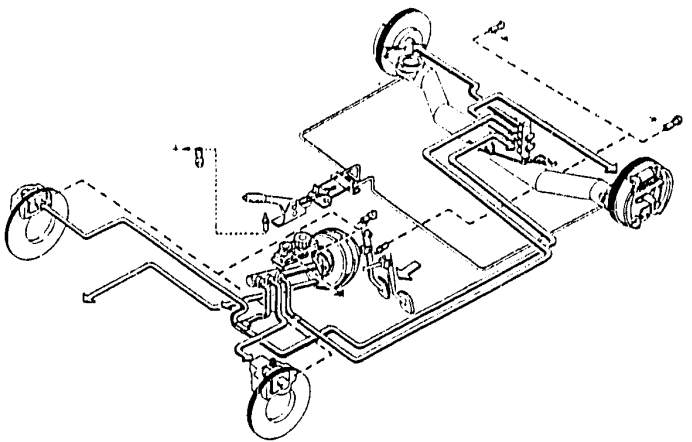

Examine the brake pipes and hoses for damage or corrosion and ensure that they are correctly fitted.

Check the brake unions for leakage of hydraulic fluid. If necessary tighten the unions to the correct torque (see GROUP 22).

CHECKING LEVEL OF POWER STEERING FLUID

- Park the vehicle on a level surface with the wheels straight.

1. Disconnect the breather pipe from the filler cap.
2. Remove the cap and check that the liquid comes up to the MAX mark.

- Otherwise refill the system with the specified oil following the procedure given in GROUP 23.

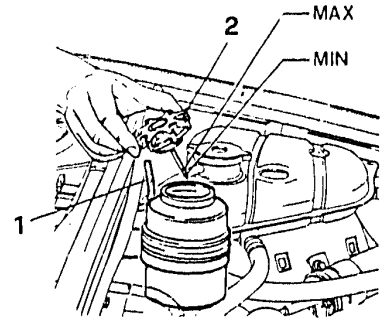

CHECKING DRIVE SHAFT AND STEERING LINKAGE

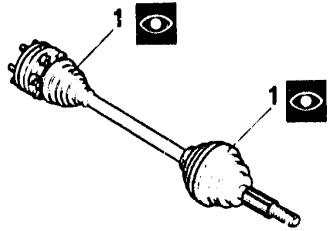

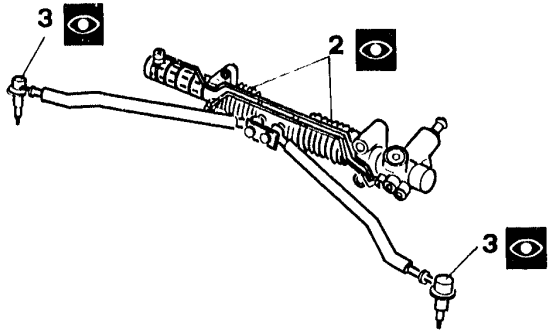

Visually examine the drive shafts for evident wear and component distortion.

1. Check that the protective bellows are not damaged and not leaking grease. If necessary substitute worn or damaged components.
2. Check the condition of the power steering rack bellows.
3. Check that the protective boots on the steering tie-rod joints are undamaged. Replace the components if necessary (see **GROUP 23**).

CHECKING REAR DRIVE SHAFTS (For 4x4 versions)

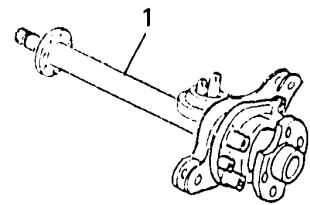

- Visually examine for superficial damage.

1. Check that the flared tubes are not dented or nicked especially on the surfaces attached to the outer casing and to the brake-shoe holder disc.

- Check the bearings on the half-shafts by slowly rotating them. If the bearings are in good condition there should be no noise or resistance.

CHECKING AND ADJUSTING HANDBRAKE

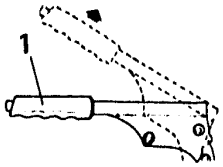

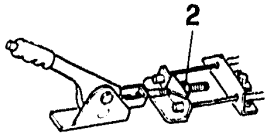

Applied force	98 N (10 kg)
Travel	2 detents

- Operate the pedal a few times to take up the backlash between the rear drums and linings.

1. Operate the handbrake lever and check that its travel corresponds to the specified number of ratchet detents.
2. If necessary slacken the lock nut and adjust the cable tensioning nut located under the central console in the passenger compartment.

- With the handbrake fully off, the brake shoes must be free.
- When the handbrake is operated the cables must run freely.
- The handbrake-on warning light must come on within one detent of the ratchet and go out as soon as the handbrake is released.
- The handbrake lever must operate easily and smoothly and the pawl must drop into the ratchet without difficulty as soon as the lever is pulled.

ENGINES WITH ELECTRONIC INJECTION (16 VALVES)

TCS

- TECHNICAL CHARACTERISTICS AND SPECIFICATIONS
- SPECIFIC TOOLS

TECHNICAL CHARACTERISTICS AND SPECIFICATIONS

REFILLING WITH FLUIDS AND LUBRICANTS .....00 - 118
ENGINE MAINTENANCE.....00 - 119
Engine unit.....00 - 119
Cooling system .....00 - 119
Fuel system.....00 - 120
MAINTENANCE OF MECHANICAL GROUPS.....00 - 121
Braking system .....00 - 121
TIGHTENING TORQUES.....00 - 121

SPECIFIC TOOLS.....00 - 122

TECHNICAL CHARACTERISTICS AND SPECIFICATIONS
REFILLING WITH FLUIDS AND LUBRICANTS

APPLICATION	NAME			QUANTITY
ENGINE	AGIP Nuovo Sint 2000 10W/40	IP SINTIAX Motor Oil 10W/40	SELENIA SPECIAL FORMULA ALFA ROMEO 10W/40	3,6 kg (4,0 l) (*)
GEARBOX-DIFFERENTIAL	AGIP ROTRA /MP 80W/90	IP PONTIAX HD 80W/90	TUTELA W90/M-DA	2,4 kg (2,6 l)
REAR DIFFERENTIAL	AGIP ROTRA /MP 80W/90	IP PONTIAX HD 80W/90	TUTELA W90/M-DA	0,9 kg (1l)
HYDRAULIC STEERING BOX	AGIP DEXRON II	IP DEXRON FLUID II	TUTELA GI/A	1,1l
BRAKES/CLUTCH	AGIP BRAKE FLUID DOT 4	IP AUTO FLUID F.R. DOT4	ALFA ROMEO BRAKE FLUID SUPER DOT4	0,45 kg
COOLING	AGIP ANTIFREEZE EXTRA	IP ANTIFREEZE	ALFA ROMEO ANTIFREEZE (concentrated) ALFA ROMEO CLIMAFLUID PERMANENT -40°C	7,8l 7,3l (**)

(*) The quantity indicated is for periodical substitution
(**) For Sport Wagon 4x4 and Sport Wagon 1.7 IE versions

ENGINE MAINTENANCE

Engine unit

Alternator - pump belt tension	Force applied to belt	N (kg)	On assembly	400 ÷ 450 (40 ÷ 45)
			Re-tesnioning	300 ÷ 350 (30 ÷ 35)
Air conditioner belt tension	Force applied to belt	N (kg)	On assembly	450 ÷ 500 (45 ÷ 50)
			Re-tensioning	350 ÷ 400 (35 ÷ 40)
Power steering belt tension	Force applied to belt	N (kg)	On assembly	400 ÷ 450 (40 ÷ 45)
			Re-tensioning	300 ÷ 350 (30 ÷ 35)

Cooling system

Test pressure	kPa	bar	kg/cm^2
Pressure cap setting	100 ± 10	1,0 ± 0,1	1,0 ± 0,1
Cooling circuit	107,9	1,08	1,1

ENGINE MAINTENANCE (continued)

Fuel system

		Without catalytic converter	With catalytic converter
Engine idle r.p.m. (with engine warm, gearbox in neutral and clutch engaged) r.p.m.		800 + 900	900 + 1050
Percentage of exhaust CO at idle speed % in vol.	On leaving exhaust pipe	0,5 + 1,5	≤ 0,5
	Upstream of catalytic converter	-	0,6 + 1,0
Unburt hydrocarbons HC	On leaving exhaust pipe	-	≤ 50 p.p.m.
	Upstream of catalytic converter	-	≤ 300 p.p.m.

MAINTENANCE OF MECHANICAL UNITS

Braking system

Handbrake	Lever travel, applying a force of 98 N (10 kg)	2 notches

TIGHTENING TORQUES

Item	Nm	kgm
Bolt securing belt-tensioner	37 ÷ 46	3,8 ÷ 4,7
Spark plugs	25 ÷ 34	2,6 ÷ 3,5

SPECIFIC TOOLS

1.820.206.000	Plate for blocking timing pulley	
1.824.018.000 (C.2.0131)	Drive belt tensioner	
1.822.102.000	Socket wrench for removal - replacement of spark plugs	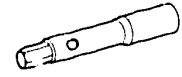
1.822.103.000	Ratchet wrench for removal - replacement of spark plugs	
1.824.013.000 (C.2.0126)	Pressure reducer	
1.824.020.000 (C.4.0101)	Pressure measuring instrument	

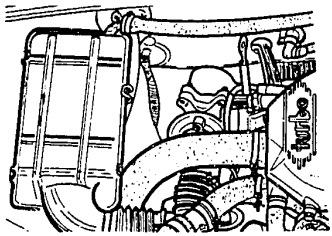

TURBODIESEL ENGINE

- ENGINE MAINTENANCE SUPPLY

ENGINE MAINTENANCE SUPPLY

REPLACING ENGINE OIL AND FILTER ..... 00 - 123
DRIVE BELTS ..... 00 - 124
Tensioning alternator and water pump drive belt ..... 00 - 124
Tensioning power steering drive belt ..... 00 - 125
CHECKING AND ADJUSTMENT OF IDLE SPEED ..... 00 - 126
CHECKING AIR CLEANER FILTER ..... 00 - 127
CHECKING PRESSURE AND SEALING OF SUPPLY SYSTEM ..... 00 - 128
CHECKING EXHAUST SMOKING ..... 00 - 129

REPLACING ENGINE OIL AND FILTER

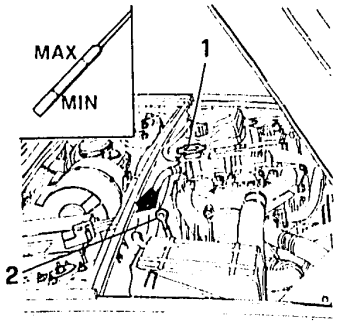

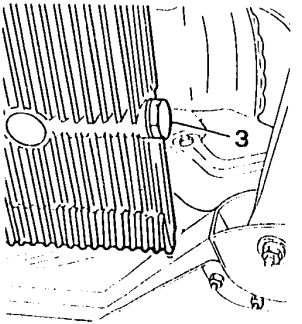

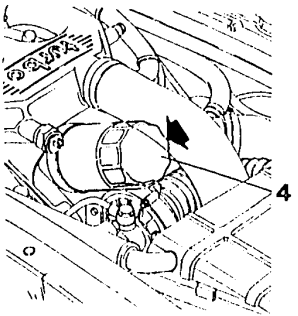

1. When the engine is hot, remove the filler cap.
2. Withdraw the dipstick.
3. Remove the cap from the sump and leave the oil to drain off for at least 15 minutes.
4. Using the appropriate spanner, remove the oil filter.

Whitish substances indicate coolant leakage. Low viscosity is due to dilution with fuel.

- When all the oil has drained off clean the drain cap and screw it back onto the sump with its gasket and tighten to the correct torque.
- Wipe the gasket of the new filter with oil and tighten it by hand.
- Refill the engine with the specified type and quantity of oil (see TSN).
- Check the oil level with the dipstick.
- Screw the filler cap back on, start the engine and let it run for at least 2 minutes.
- Check the oil level again and check that there are no leaks.

The oil level should be checked when the vehicle is on a level surface.

DRIVE BELTS

TENSIONING ALTERNATOR AND WATER PUMP DRIVE BELT

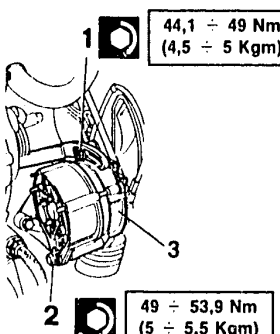

1. Unscrew the nut on the regulation arm.
2. Loosen the bolt securing the alternator.
3. Move the alternator to tighten or slacken the belt.

- Re-tighten the bolts and with tool N° 1.824.018.000 (C.2.0131) check that the tension values are within the specified limits.

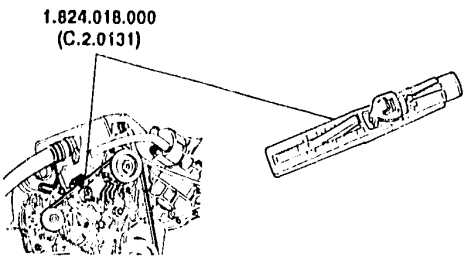

Alternator - water pump drive belt tension	
During installation	380 - 430 N
After 2 hours of operation	280 - 330 N

- Repeat the above operations if the tension values are not within the specified limits.
- Tighten the nut bolt securing the alternator to the correct torques.

DRIVE BELTS (continued)
TENSIONING POWER STEERING BELT

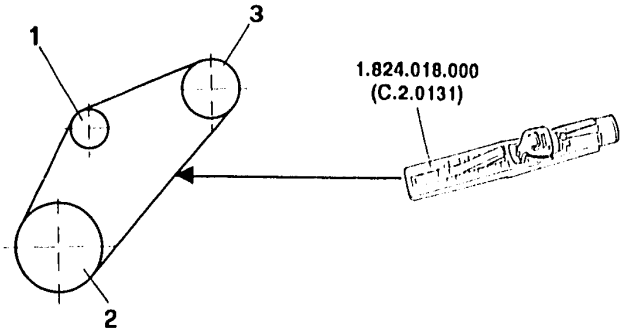

1. *Tension roller*
2. *Crankshaft pulley*
3. *Power steering pump pulley*

- To adjust the tension regulate the tension roller.
- Check that the tension values are correct using tool N° 1.824.018.000 (C.2.0131).

Power steering belt tension	
During assembly	380 - 430 N
After 2 hours of operation	280 - 330 N

CHECKING AND ADJUSTMENT OF IDLE SPEED

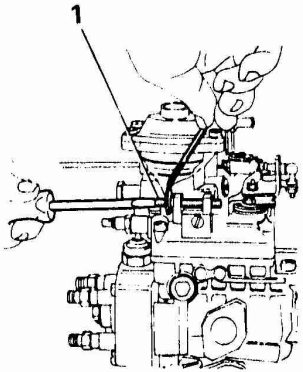

- Adjust the idle speed with the engine at normal operating temperature, the gears in neutral and with all the users switched off proceeding as follows:

1. Loosen the counter nut and adjust the regulation screw until the correct values are obtained.

Idle speed	900 ± 25 r.p.m.

CHECKING AIR CLEANER CARTRIDGE

1. Unhook the spring clips holding the filter housing cover.
2. Lift the cover just enough to remove the filter cartridge without damaging the sleeve.
- Carefully clean the filter by blowing through with low-pressure compressed air in the opposite direction to the normal flow of air.
- Insert the cartridge in its housing with the projection part facing downwards and replace the cover.

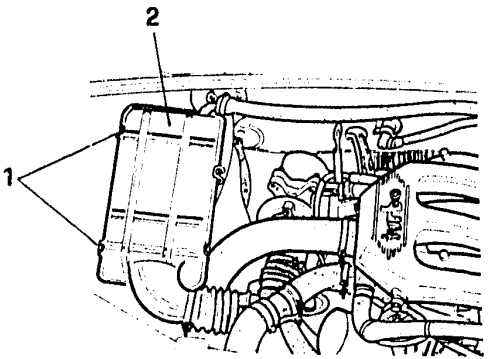

CHECKING SEALING AND PRESSURE OF SUPPLY CIRCUIT

1. Disconnect the fuel hose from the fuel pump.
2. Using a T adapter, connect a pressure gauge to the previously disconnected fuel line.

- Bleed the air from the system.
- Start the engine and at idle speed check that the fuel pressure is:

20 kPa (0.2 bars; 0.2 kg/cm^2)

Keeping the pressure gauge connected and with the engine running at idle speed ensure that the fuel connections and hoses do not leak.

- If the pressure in the fuel system does not reach the specified values and there are no leaks, check the fuel filter and/or the operation of the pump.

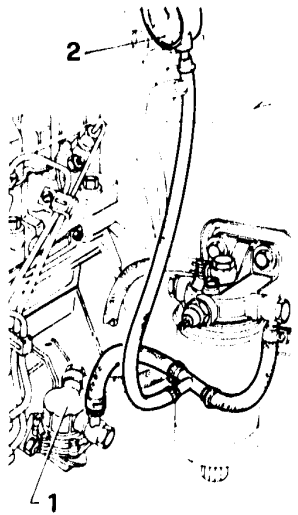

CHECKING EXHAUST SMOKING

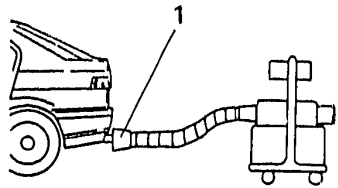

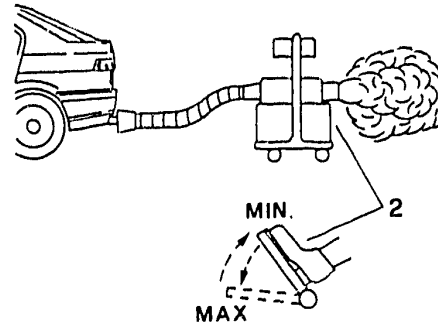

1. Insert the exhaust gas sampler hose to the end of the exhaust pipe.
- Run the engine to normal operating temperature and switch off any devices which may reduce the smoking.

2. Rev the engine three times one after the other bringing the engine to the maximum level.

CHECKING EXHAUST SMOKING (continued)

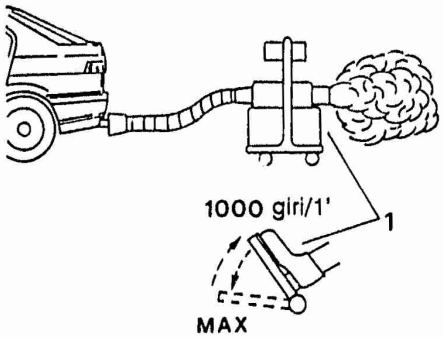

Opacity limits permitted by law	
new vehicles	< 50%
vehicles in circulation	< 70%

1. Rev the engine 5 times one after the other and memorize the value obtained each time.

During revving the minimum r.p.m value must no fall below 1000 r.p.m.

- Calculate the average and check that the opacity is within the specified limits.

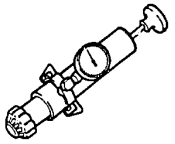

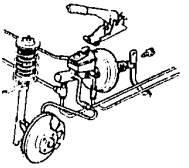

TURBODIESEL ENGINE

- COOLING MAINTENANCE
- MAINTENANCE OF MECHANICAL GROUPS

COOLING MAINTENANCE

CHECKING LEVEL OF COOLING LIQUID ..... 00 - 131
CHECKING SEALING OF COOLING SYSTEM ..... 00 - 132
Checking sealing of pressurized cap ..... 00 - 133

MAINTENANCE OF MECHANICAL GROUPS

CHECKING LEVEL AND REPLACING GEARBOX AND DIFFERENTIAL OIL ..... 00 - 134
CHECKING WHEEL TOE-OUT ..... 00 - 135
CHECKING LEVEL OF BRAKE/CLUTCH FLUID .... 00 - 136
CHECKING BRAKING SYSTEM ..... 00 - 137
CHECKING LEVEL OF POWER STEERING FLUID ..... 00 - 138
CHECKING DRIVE SHAFTS AND STEERING TIE-RODS ..... 00 - 139
CHECKING AND ADJUSTMENT OF HANDBRAKE ..... 00 - 140

CHECKING COOLANT LEVEL

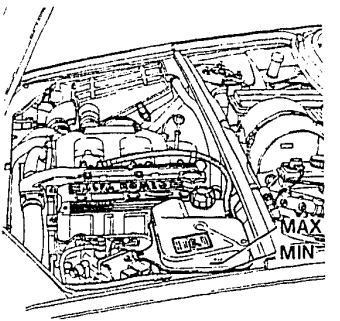

- When the engine is cool, check that the liquid in the reservoir is between the MIN and MAX marks.
- If this is not the case, refill the system with the specified liquid.

CHECKING SEALING OF COOLING SYSTEM

Cooling circuit test pressure
107.9 kPa (1.08 bars 1.1 kg/cm^2)

- Unscrew the expansion tank pressure cap.

1. Attach the pressure tester to the expansion tank filler opening.

- Pressurize the circuit and ensure that the pressure reading on the tester remains constant at the set value.

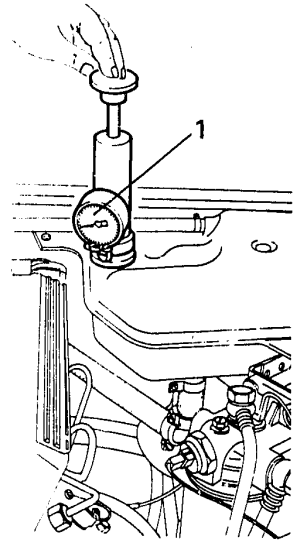

CHECKING SEALING OF COOLING SYSTEM (continued)

CHECKING SEALING OF PRESSURIZED CAP

Pressure cap setting
88.3 - 107.9 kPa (0.88 - 1.08 bars; 0.9 - 1.1 kg/cm^2)

1. Fit the connection to the test equipment.
2. Fit the connection to the expansion tank pressurized cap.

- Pump up the pressure and ensure that the release valve opens at the correct pressure.

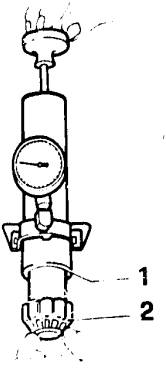

CHECKING LEVEL AND REPLACING GEARBOX-DIFFERENTIAL OIL

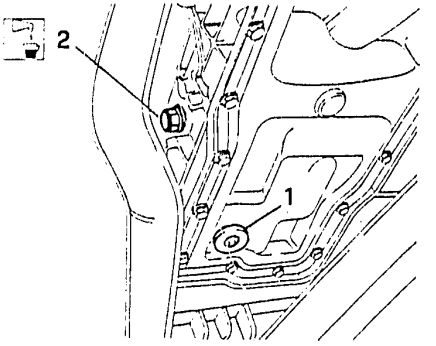

CHECKING LEVEL OF GEARBOX-DIFFERENTIAL OIL

- Unscrew the filler cap and check that the oil level comes up to the lower rim of the filler neck. Wipe the cap clean and screw it back on.

SUBSTITUTING GEARBOX-DIFFERENTIAL OIL

1. When the engine is warm, remove the drain plug.
2. Remove the oil filler cap.

- Leave the oil to drain off for at least **15 minutes**, clean the drain plug and screw it back into place.
- Refill with the specified type and quantity of oil and screw the cap back on (see TSN).

CHECKING WHEEL TOE-OUT

L = 1/2M + 1 ± 1
H = M + 2 ± 2

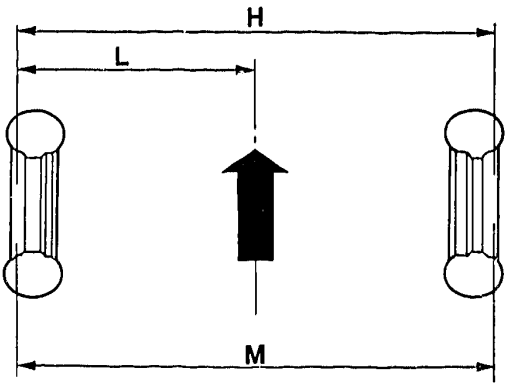

- Check the vehicle trim (see **GROUP 21**).
- Working from one side of the suspension adjust the steering tie-rod to the indicated value (L).
- Adjust the rod on the opposite side until value H is obtained.
- Tighten the adjustment nuts on the tie-rods to the correct torque.

55 - 69 Nm
(5.6 - 7 kgm)

- Correct the position of the steering wheel rungs by removing the steering wheel and refitting it allowing a tollerance of ± 5° on the central rung.

CHECKING LEVEL OF BRAKE/CLUTCH FLUID

NOTE **When checking the fluid level the vehicle must be on a level surface.**

- Check that the fluid reaches the MAX mark on the side of the reservoir and that it is no more than a quarter of the way down below this level.
- If necessary refill with the specified fluid.

If the level is very low, check that the brake/clutch system is not leaking.

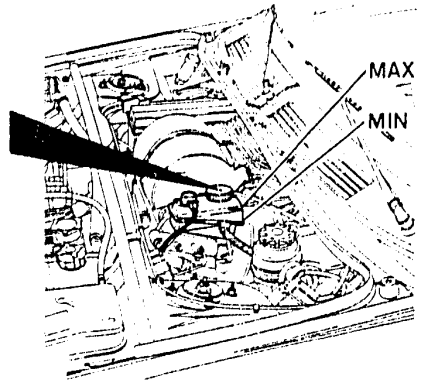

CHECKING BRAKING SYSTEM

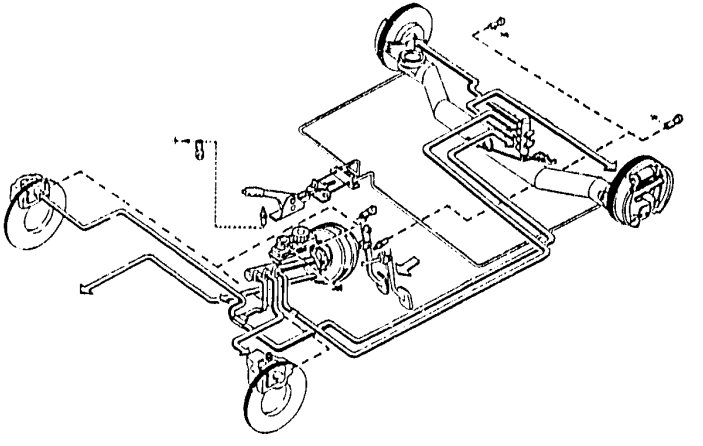

Check that the brake pipes and hoses are not damaged or corroded and ensure that they are correctly fitted.

Check the brake unions for leakage of hydraulic fluid. If necessary tighten the unions to the correct torque (see GROUP 22).

CHECKING LEVEL OF POWER STEERING FLUID

- Park the vehicle on a level surface with the wheels straight.

1. Disconnect the breather pipe from the filler cap.
2. Remove the cap and check that the liquid comes up to the MAX mark.

- Otherwise refill the system with the specified oil following the procedure given in GROUP 23.

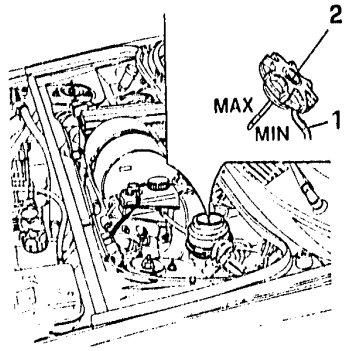

CHECKING DRIVE SHAFT AND STEERING LINKAGE

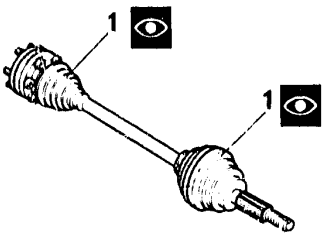

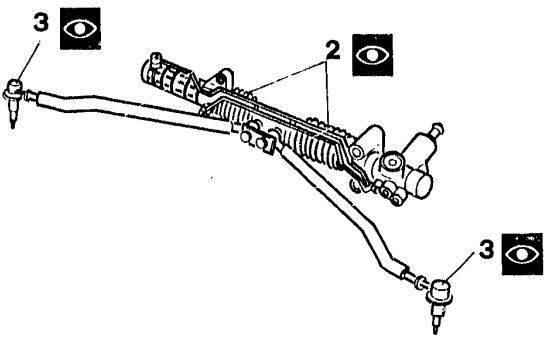

Visually examine the drive shafts for evident wear and component distortion.

1. Check that the protective bellows are not damaged or leaking grease. If necessary substitute worn or damaged components.
2. Check the condition of the steering rack bellows.
3. Check that the protective boots on the steering tie-rod joints are not damaged. If necessary replace the components (see **GROUP 23**).

CHECKING AND ADJUSTING HANDBRAKE

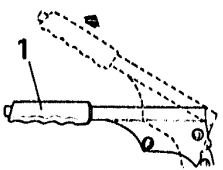

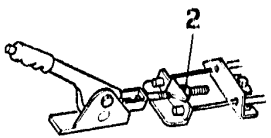

Applied force:	98 N (10 kg)
Travel	2 detents

- Operate the pedal a few times to take up the backlash between the brake linings and and rear drums.
1. Operate the handbrake lever and check that its travel corresponds to the specified number of ratchet detents.
2. If necessary slacken the lock nut and adjust the counter nut and cable tensioning nut located under the passenger compartment central console.

- With the handbrake fully off, the brake shoes must be free.
- When the handbrake is operated the cables must run freely.
- The handbrake warning light must come on within one detent of the ratchet and go out as soon as the handbrake is released.
- The handbrake lever must operate easily and smoothly and the pawl must drop into the ratchet without difficulty as soon as the lever is pulled.

TURBODIESEL ENGINE

TCS

- TECHNICAL CHARACTERISTICS AND SPECIFICATIONS
- SPECIFIC TOOLS

TECHNICAL CHARACTERISTICS AND SPECIFICATIONS
REFILLING WITH FLUIDS AND LUBRICANTS .....00 - 141
ENGINE MAINTENANCE.....00 - 142
Engine unit .....00 - 142
Fuel system.....00 - 142
Cooling system .....00 - 142
MAINTENANCE OF MECHANICAL GROUPS.....00 - 142
Braking system .....00 - 142
TIGHTENING TORQUES.....00 - 143

SPECIFIC TOOLS.....00 - 143

TECHNICAL CHARACTERISTICS AND SPECIFICATIONS
REFILLING WITH FLUIDS AND LUBRICANTS

APPLICATION	NAME			QUANTITY
ENGINE	AGIP Sint Turbo Diesel 10W/40	IP SINTIAX Turbo Diesel 10W/40	-	4,6 kg (5,25 l) (*)
GEARBOX-DIFFERENTIAL	AGIP ROTRA /MP 80W/90	IP PONTIAX HD 80W/90	TUTELA W90/M-DA	2,4 kg (2,6 l)
HYDRAULIC STEERING BOX	AGIP DEXRON II	IP DEXRON FLUID II	TUTELA GI/A	0,9 l
BRAKES/CLUTCH	AGIP BRAKE FLUID DOT 4	IP AUTO FLUID F.R. DOT4	ALFA ROMEO BRAKE FLUID SUPER DOT4	0,45 kg
COOLING	AGIP ANTIFREEZE EXTRA	IP ANTIFREEZE	ALFA ROMEO ANTIFREEZE (concentrated) ALFA ROMEO CLIMAFLUID PERMANENT -40°C	8,8 l

(*) The quantity indicated is for periodical substitution

ENGINE MAINTENANCE

Engine unit

Alternator - pump belt tension	Force applied to belt	N (kg)	On assembly	380 ÷ 430 (38 ÷ 43)
			Re-tensioning	280 ÷ 330 (28 ÷ 33)
Power steering belt tension	Force applied to belt	N (kg)	On assembly	380 ÷ 430 (38 ÷ 43)
			Re-tensioning	280 ÷ 330 (28 ÷ 33)

Fuel system

Engine idle r.p.m. (with engine warm, gearbox in neutral and clutch engaged)	r.p.m.	900 ± 25

Cooling system

Test pressure	kPa	bar	kg/cm^2
Pressure cap setting	88,3 ÷ 107,9	0,88 ÷ 1,08	0,9 ÷ 1,1
Cooling circuit	107,9	1,08	1,1

MAINTENANCE OF MECHANICAL UNITS

Braking system

Handbrake	Lever travel, applying a force of 98 N (10 kg)	2 ÷ 3 notches

TIGHTENING TORQUES

Item	Nm	kgm
Bolt securing alternator	49 ÷ 53,9	5 ÷ 5,5
Bolt securing alternator on adjustment arm	44,1 ÷ 49	4,5 ÷ 5
Union of power steering pump deliverg filter neck	50 ÷ 55	5,1 ÷ 5,6

SPECIFIC TOOLS

1.824.018.000 (C.2.0131)	Drive belt tensioning tool	

MICROFICHE INDEX

Microfiche 3/14

Group 01 - Twin carburettor engines

ENGINE - POWER TRAIN REMOVAL ..... 01 - A
ENGINE - POWER TRAIN REMOVAL (continued), ENGINE - POWER TRAIN INSTALLATION, SEPARATION AND RECONNECTION OF ENGINE FROM/TO GEARBOX-DIFFERENTIAL ..... 01 - B
ENGINE, ENGINE DISMANTLING ..... 01 - C
ENGINE DISMANTLING (Continued), CYLINDER HEADS ..... 01 - D
INSPECTION AND CHECKS ..... 01 - E
INSPECTION AND CHECKS (Continued) ..... 01 - F
ENGINE REASSEMBLY ..... 01 - G
ENGINE REASSEMBLY (Continued) ..... 01 - H
ENGINE REASSEMBLY (Continued) ..... 01 - I
LUBRICATION CIRCUIT ..... 01 - L
TDS ..... 01 - M
TDS (Continued), SPECIAL TOOLS ..... 01 - N

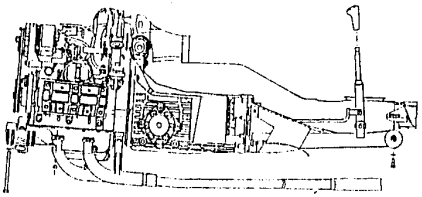

PA123D201

TWIN CARBURETOR ENGINES

ENGINE-POWER TRAIN REMOVAL

ENGINE - POWER TRAIN REMOVAL ..... 01 - 1

ENGINE - POWER TRAIN REMOVAL

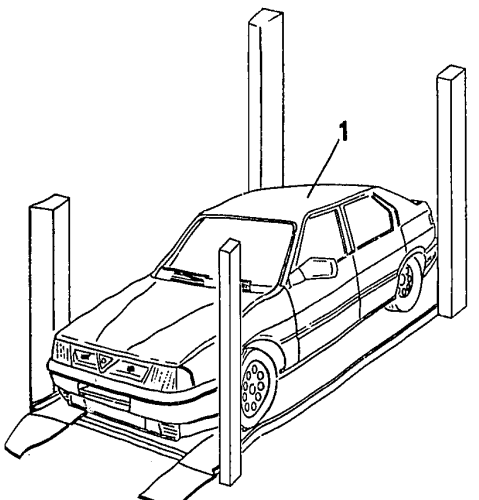

PA001D201

1. Position the vehicle on the inspection ramp, put it in 1st gear and put the handbrake on.
- Remove the engine hood (see GR. 56)).

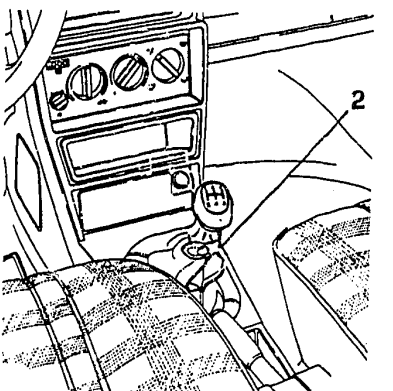

PB001D202

- Disconnect the negative battery lead.
2. Working from inside the passenger compartment, unscrew the gear lever knob and dust boot.

ENGINE - POWER TRAIN REMOVAL (Continued)

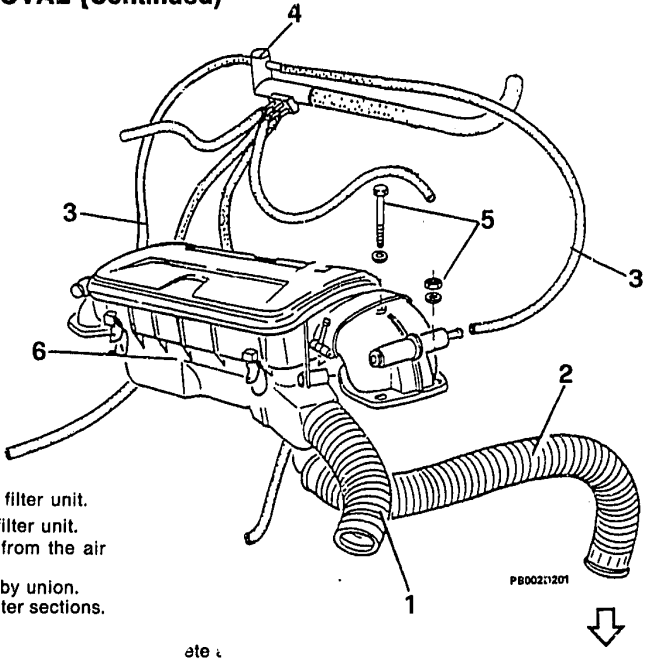

1. Disconnect the cold air hose from the air filter unit.
2. Disconnect the hot air hose from the air filter unit.
3. Disconnect the maximum blow-by pipes from the air filter compartments.
4. Separate the air filter unit from the blow-by union.
5. Unscrew the bolts and nuts from the air filter sections.
6. Remove the complete air filter unit.

ete ‹

ENGINE - POWER TRAIN REMOVAL (Continued)

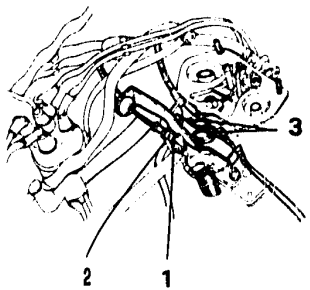

1. Remove the throttle cable retainer.
2. Remove the regulator from the bracket.
3. Unscrew the two attaching bolts on the bracket.

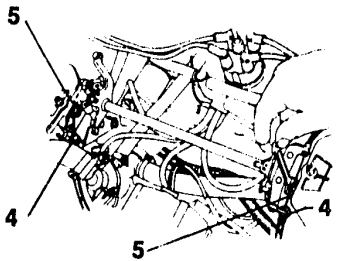

PA003D201

4. Remove sheath retainer on the left and right side starter lead.
5. Unscrew the starter lead attachment clamp bolts on the right and left carburetors.



ENGINE - POWER TRAIN REMOVAL (Continued)

NOTE: Disconnect the following electric leads, preferably from the side indicated.

1. Remove earth cable from rear engine cover.
2. Remove high tension lead from coil.
3. Remove low tension and rev counter lead from coil.
4. Remove power supply leads and alternator warning lamp lead from alternator.
5. Remove water temperature thermal contact from sensor on RH cylinder head.
6. Remove electric fan power supply cable from electric fan.
7. Remove starter motor power supply and energizer cables from starter motor.

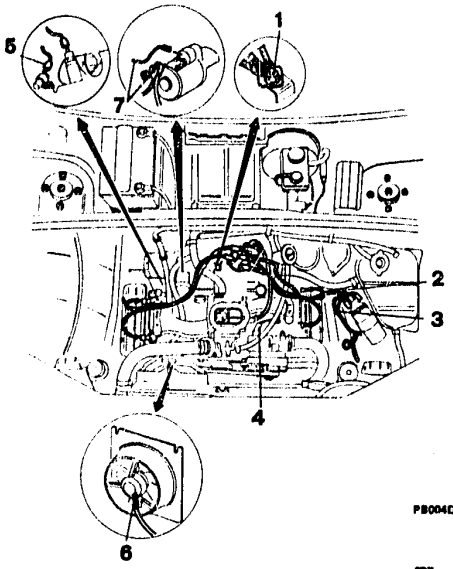

PB004D201

ENGINE - POWER TRAIN REMOVAL (Continued)

1. Remove oil pressure sensor lead from oil pressure sensor on rear casing.
2. Rmove electric fan thermal contact lead from thermal contact on radiator.
3. Remove foglight power supply leads from foglight connectors.
4. Remove headlight power supply leads.
5. Remove horn power supply leads.
6. Remove water temperature sender lead from sender on intake manifold.
7. Remove electronic injection coil lead from distributor.
8. Remove distributor cap together with spark plug leads.

Free all electric leads from their retainers. Keep them away from the engine - power train unit, so as not to hamper its removal.

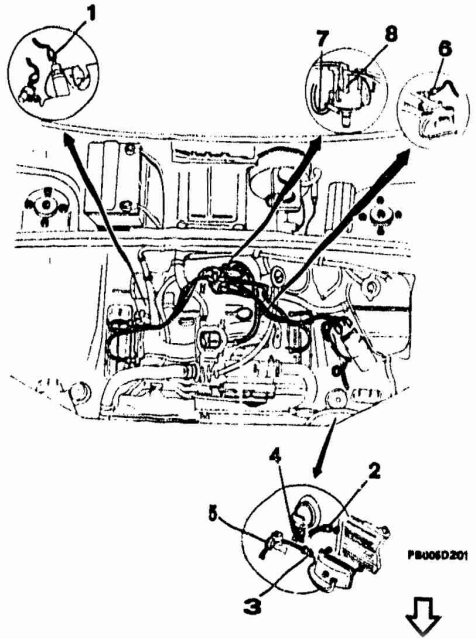

ENGINE - POWER TRAIN REMOVAL (Continued)

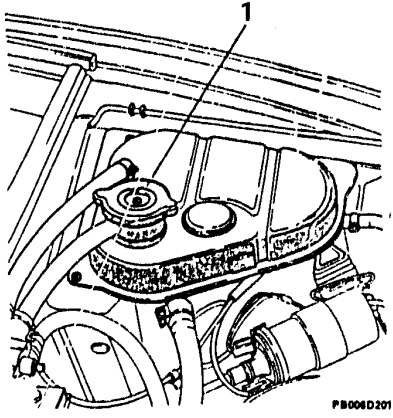

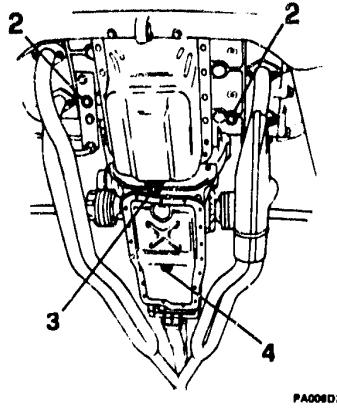

1. Remove the top from the expansion tank.

- Raise the vehicle.

2. Remove the coolant drain plugs, drain the cooling system
and replace the plugs.

3. Drain the oil from the sump by removing the plug.
4. Drain the oil from the gearbox-differential unit by removing the plug, then replace the plug.

- Lower the vehicle.

ENGINE - POWER TRAIN REMOVAL (Continued)

NOTE: Disconnect the following pipes and couplings, preferably from the side indicated.

1. Remove heater hot water delivery hose from intake manifold.
2. Remove heater water return hose from water pump-intake.
3. Remove the engine block water drainage pipe from the heater.
4. Remove radiator water delivery hose.
5. Remove radiator water return hose from water pump intake.
6. Remove fuel supply pipe from fuel pump.
7. Remove fuel delivery pipe from carburettor.

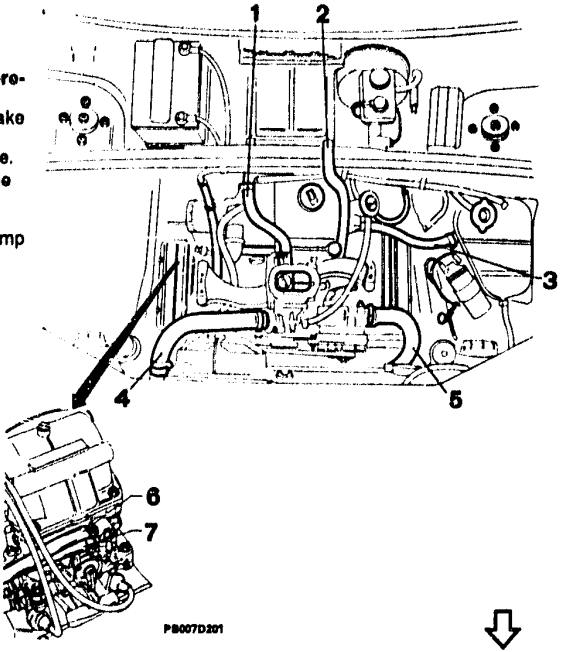

PB007D201

ENGINE - POWER TRAIN REMOVAL (Continued)

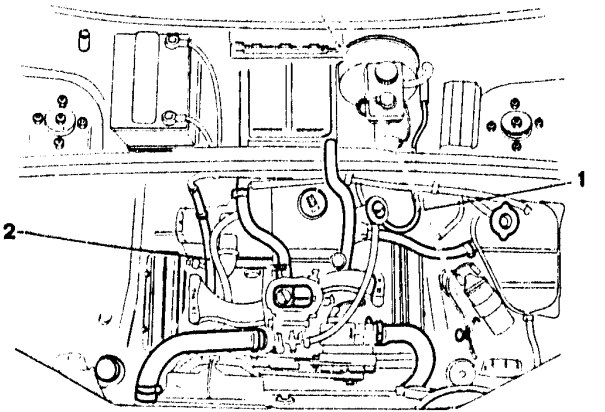

PA008D201

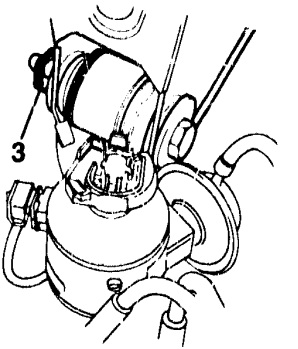

PA008D202

1. Remove the flexible clutch fluid sender tube from its connection with the rigid tube, then plug the rigid tube.
2. Remove the servo brake vacuum receive pipe from from the intake manifold.
3. Loosen the bolt that attaches the central engine mounting to the body.

⇩

ENGINE - POWER TRAIN REMOVAL (Continued)

- Raise vehicle.
1. Remove nut securing hot air intake support bracket.
2. Disconnect the exhaust gas manifolds from the right and left of engine cylinder head by unscrewing the nuts.
3. Remove the final section of exhaust piping (See GR. 04).
4. Unscrew and remove the two bolts fastening the front engine mounting to the crossmember.
5. Unscrew and remove the four bolts fastening the front crossmember the body.
6. Unscrew the bolt fastening the front crossmember to the RH strut.
7. Unscrew the bolt fastening the front crossmember to the LH strut and release the strut from the crossmember.

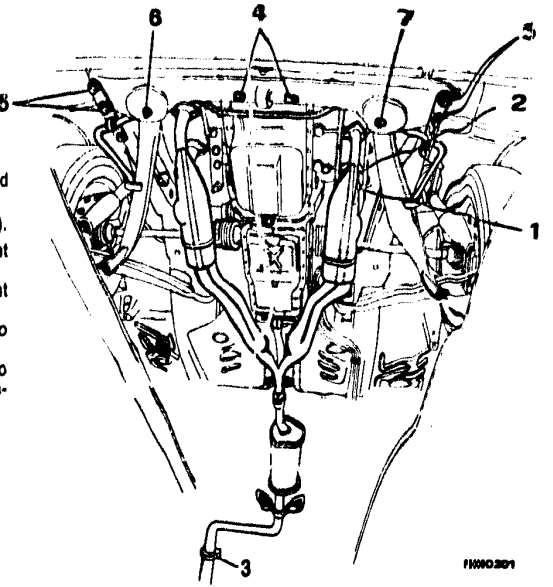

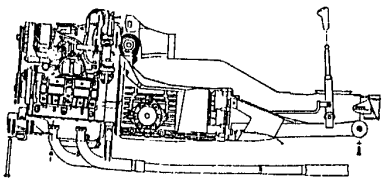

PB131D201

TWIN-CARBURETTOR ENGINES

ENGINE-POWER TRAIN REMOVAL (Continued)

ENGINE-POWER TRAIN INSTALLATION

SEPARATION AND RECONNECTION OF ENGINE FROM/TO GEARBOX-DIFFERENTIAL

ENGINE-POWER TRAIN REMOVAL ..... 01 - 10

ENGINE-POWER TRAIN INSTALLATION ... 01 - 14

CYLINDER COMPRESSION TEST ..... 01 - 20

SEPARATION AND RECONNECTION OF ENGINE FROM/TO GEARBOX-DIFFERENTIAL ..... 01 - 21

ENGINE - POWER TRAIN REMOVAL (Continued)

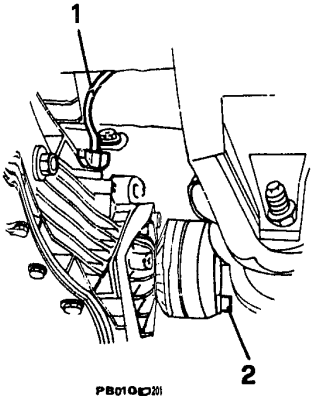

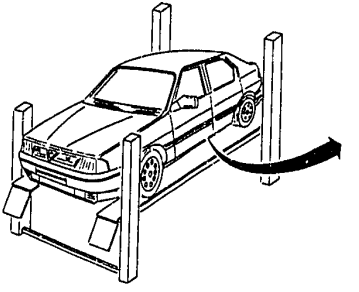

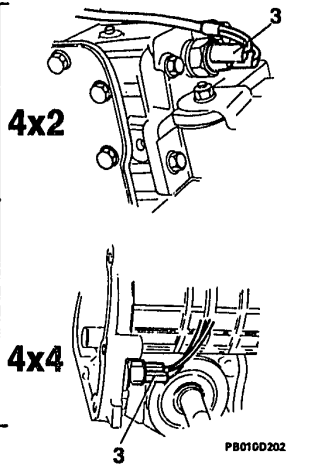

1. Disconnect the odometer lead from the gearbox by removing the rubber retaining ring.
2. Unscrew the differential half ring screws and release the half rings.
3. Disconnect the leads of the reverse lights.

- Unscrew the two attachment bolts on the engine torsion bar mounting bracket and position a columun-type hydraulic jack fitted with tool N° 1.820.208.000 underneath the engine - power train unit.



ENGINE - POWER TRAIN REMOVAL (Continued)
(Specific for 4WD versions)

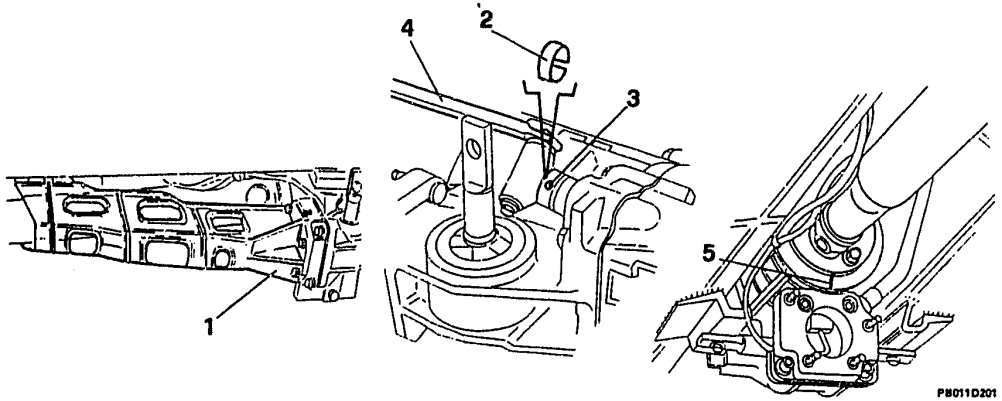

1. Remove the gear lever support.
2. Remove the flexible safety clamp.
3. Remove the fastening pin.
4. Remove the gear lever.
5. Make a reference mark on the propeller shaft front attachment flange to ensure proper reassembly.

ENGINE - POWER TRAIN REMOVAL (Continued)
(Specific for 4WD versions)

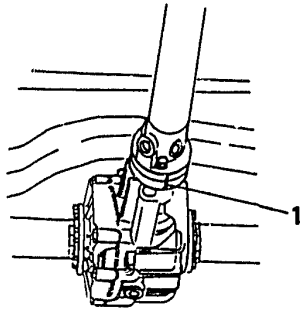

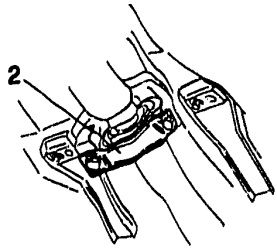

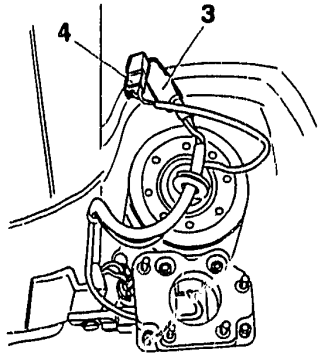

PB012D201

1. Make a reference mark on the propeller shaft near attachment flange to ensure proper reassembly.
2. Unscrew the screws fastening the central support.
3. Unscrew the screws fastening the front and rear flanges, and remove the propeller shaft.
4. Disconnect the electrical connector from the electromagnetic coupling.
5. Disconnect the electrical connector from the anti-disengaging sensor.

⇩

ENGINE - POWER TRAIN REMOVAL (Continued)

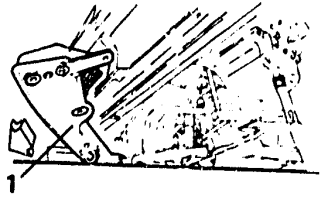

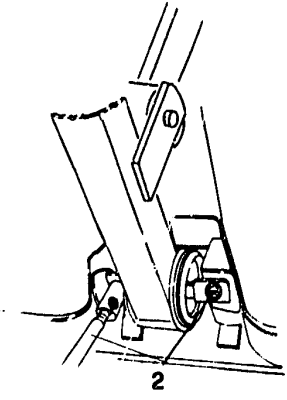

PA011D201

1. Rotate the front crossmember so that the engine-transmission unit can be extracted in a downward direction.
2. Unscrew and remove the two bolts that attach the rear engine-transmission unit mounting to the body.

- Remove the bolt, previously loosened, that attaches the central engine mounting to the body.
- Lower the column-type jack and remove the engine-transmission unit from the engine compartment.

ENGINE - POWER TRAIN INSTALLATION

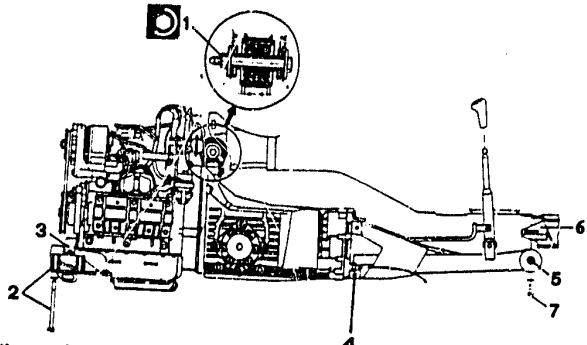

The installation of the engine-transmission unit must be carried out in such a way that the spring joint on the rear gearbox mounting and the front engine mounting cushion are not preloaded in height or longitudinally.

- Lift the engine-transmission unit with a column-type jack with tool no. 1.280.208.000, as used in the removal.

1. Position the axis of the central mounting at about halfway along the slot on the body and screw the mounting bolt fully down.
2. Attach the left strut to the engine support crossmember and attach the crossmember to the body, tightening the bolts fully down.
3. Position the front mounting cushion on the crossmember, tightening the bolts fully down.
4. Remove the jack, and loosen the lower attachment bolt on the gearbox mounting.
5. Insert the pin into the spring joint on the lower mounting.
6. Position the spring joint on its mounting points on the body.
7. Tighten the mounting bolts fully down.

- Oil and screw in the bolts that attach the half shafts to the camshafts, tightening to the specified torque.

30 ÷ 35 Nm (3.4 ÷ 3.7 kgm)

ENGINE - POWER TRAIN INSTALLATION (Continued)
(For 4x4 models)

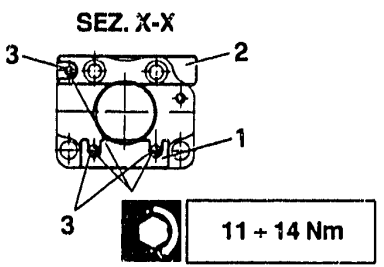

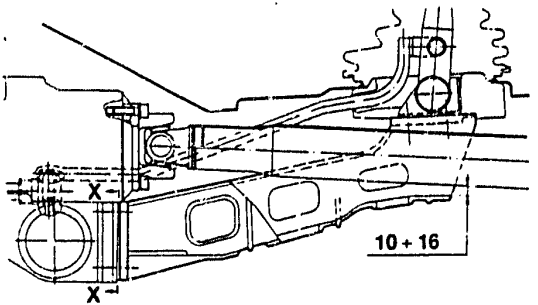

- When fitting the gear control lever support check that it is the specified distance from the drive shaft.

If this is not the case it is possible to operate as follows:

- Raise the vehicle.
- Check the distance between the support and the drive shaft.
- If it is greater than 16 mm it is necessary to insert one or more shims (1) under the lower retaining nuts.
- If the distance is below 10mm it is necessary to insert one or more shims (2) under the upper retaining nut.
- Tighten the nuts (3) to the specified torque.

NOTE **Each shim of 0.5 mm will alter the measurement by ~ 3.5 mm.**



ENGINE - POWER TRAIN INSTALLATION (Continued)

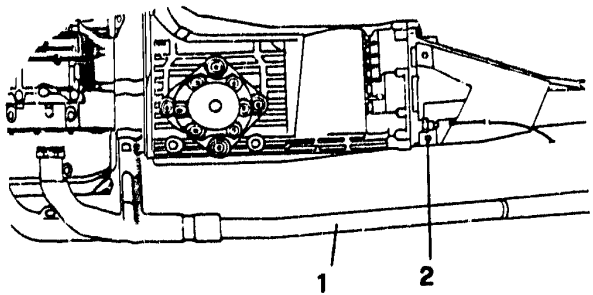

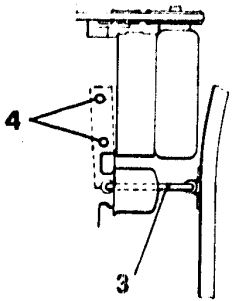

PA013D201

1. Install the exhaust piping.
2. Fully tighten the previously loosened lower bolt on the rear gearbox mounting.
3. Insert the lateral tie-rod into the spring fitting on the right-hand siderail.
4. Fully tighten the bolts on the lateral tie-rod.

ENGINE - POWER TRAIN INSTALLATION (Continued)

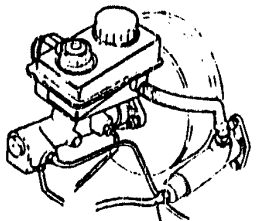

15 to 18 Nm
(1.5 to 1.9 Kgm)

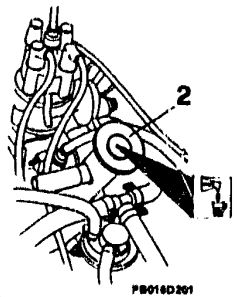

Engine oil:
AGIP Nuovo Sint 2000
10W/40
IP Sintiax Motor Oil
10W/40

- Complete the installation of the unit, reversing disassembly procedure and paying particular attention to the following points.

1. Using a wrench, tighten up the union between the flexible and rigid clutch pipes to the specified torque.
2. Check the engine oil level and if necessary refill with the specified oil (see TSN).

ENGINE - POWER TRAIN INSTALLATION (Continued)

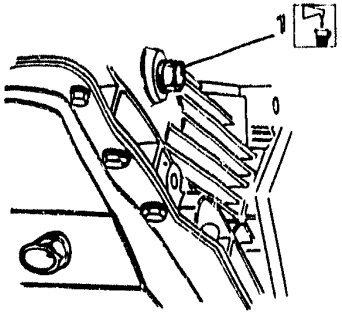

PB017D201

1. Check the gearbox-differential oil level and if necessary top up with the specified oil (see GROUP 00).

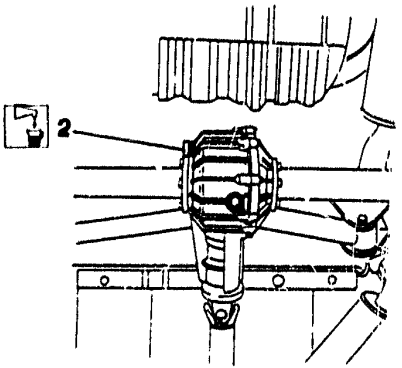

PB017D202

2. Check the rear differential oil level and if necessary top up with the specified oil (for 4x4 models) (see GROUP 00).

ENGINE - POWER TRAIN INSTALLATION (Continued)

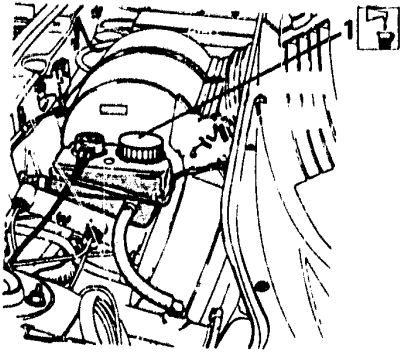

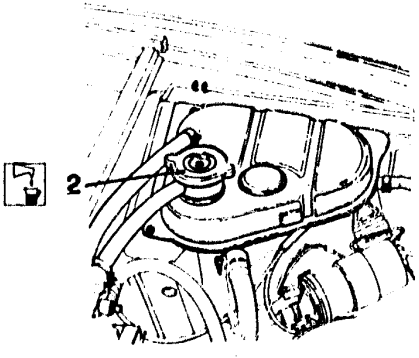

1. Bleed the hydraulic clutch system (see GROUP 12) and if necessary refill with the specified fluid (see GROUP 00).
2. Top-up the cooling system with the specified fluid (see GROUP 07).

- Calibrate the accelerator cable (see GROUP 04).
- With the engine at normal running temperature, check that the idle speed is correct.
  Refer to GROUP 00 for tuning.

ENGINE - POWER TRAIN INSTALLATION (Continued)

CYLINDER COMPRESSION TEST

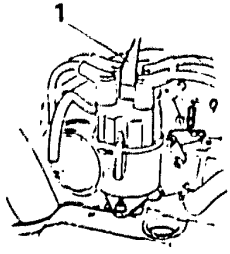

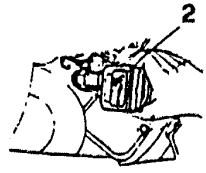

- After refitting check the cylinder compression as follows:
- Start the engine and run to normal operating temperature.
- Remove the spark plugs.
1. Disconnect the high tension cable.
2. Insert the compression test instrument in a spark plug seat.
- Turn the engine a couple of times using the starter motor and keep the accelerator pedal fully depressed so that the throttle valve of the carburettor is completely open.
- Check that the pressure is above the specified limit.

Ensure that there are no leaks from the pressure gauge connection.

Minimum pressure	1030 kPa (10.3 bar; 10.5 kg/cm^2)
Maximum difference in compression between the cylinders	98 kPa (0.98 bar; 1 kg/cm^2)

- Repeat the test to measure the pressure value in the remaining cylinders (ensuring that the test apparatus is reset each time) and then compare the values and check that the difference in maximum pressure between the various cylinders is not in excess of the specified value.
- If the measure values are different from those specified check for leaks in the valves or from between the cylinder liners and pistons.

SEPARATION AND RECONNECTION OF ENGINE FROM/TO GEARBOX-DIFFERENTIAL

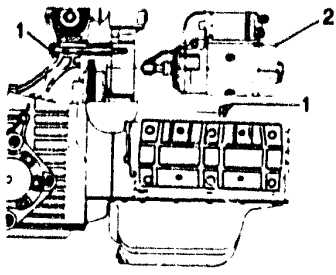

FB019D201

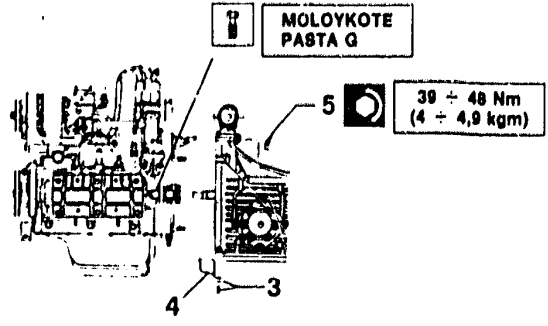

FB019D202

- Place the engine-transmission unit on a rotary stand fitted with the correct support tool.
1. Unscrew and remove the starter motor attachment nuts and washers.
2. Remove the starter motor from the engine.
3. Unscrew the flywheel casing attachment bolts.
4. Remove the flywheel casing.
5. Unscrew and remove the remaining nuts and washers and complete the separation of the two units.

Remove the thrust bearing from its seat in the gearbox, in order to avoid damaging it.

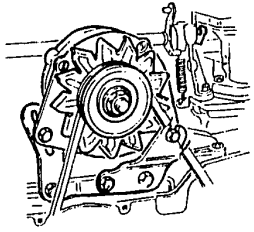

PA124D201

TWIN CARBURETOR

ENGINE

ENGINE DISMANTLING

ENGINE

EXTERNAL PARTS ASSEMBLY ..... 01 - 22
INTERNAL PARTS ASSEMBLY ..... 01 - 23
ENGINE DISMANTLING ..... 01 - 25
DISTRIBUTOR ..... 01 - 26
ALTERNATOR ..... 01 - 27
TUBING ..... 01 - 28
CARBURETORS ..... 01 - 29
THERMOSTAT AND INTAKE MANIFOLDS ..... 01 - 31
FUEL PUMP ..... 01 - 32
TIMING BELTS ..... 01 - 33
PULLEYS AND BELT TENSIONER ..... 01 - 34
WATER PUMP ..... 01 - 35
FRONT ENGINE MOUNTING ..... 01 - 36
CRANKSHAFT SPROCKET ..... 01 - 37

ENGINE

EXTERNAL PARTS ASSEMBLY

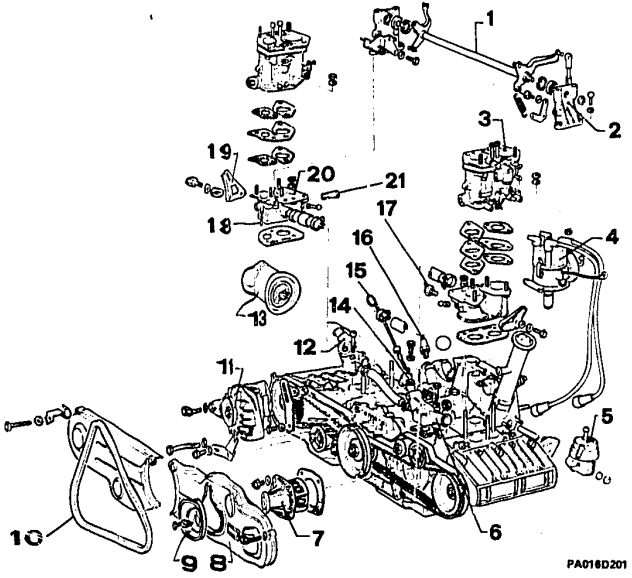

1 Valve shaft
2 Mounting
3 Carburetor
4 Distributor
5 Fuel pump
6 Water inlet
7 Water pump
8 Timing belt front cas ing
9 Water pump pulley
10 Water pump-alternator belt
11 Alternator
12 Thermostat housing
13 Oil filter
14 Water temperature thermal contact
15 Dipstick
16 Oil pressure sensor
17 Water temperature sender
18 Blow-by pipe union
19 U bolt
20 Intake manifold
21 Vacuum hose union

INTENAL PARTS ASSEMBLY

1 Belt tightener
2 Timing belt
3 Right timing belt sprocket
4 Rear timing belt casing
5 Front engine cover
6 Crankshaft oil seal
7 Engine block
8 Spacer
9 Timing belt sprocket
10 Water pump - alternator pulley
11 Spacer
12 Washer
13 Valve
14 Cylinder head
15 Valve guide
16 Lower retainer
17 Washer
18 Cap seal
19 Springs
20 Cap
21 Cotters
22 Tappet
23 Camshaft housing
24 Camshaft
25 Casing
26 Gasket
27 Oil seal ring
28 Timing belts front casing

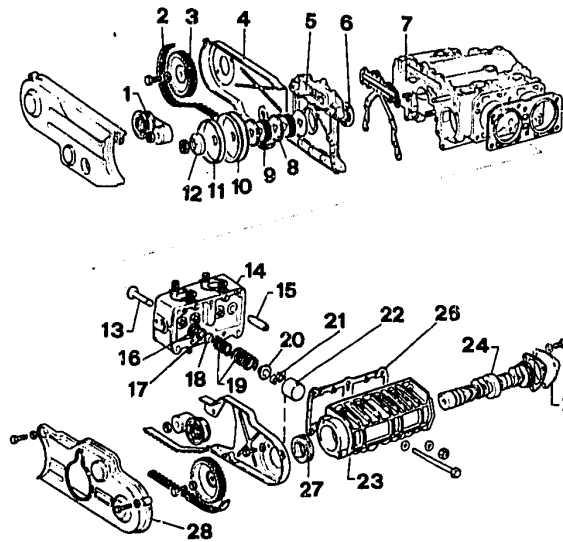

PA017D201

INTERNAL PARTS ASSEMBLY (continued)

1 Main bearings
2 Tongue
3 Thrust half rings
4 Oil pump gear
5 Bush
6 Ring seal
7 Rear casing
8 Oil filler cap
9 Flywheel
10 Washer
11 Spring clip
12 Piston pin
13 Piston rings
14 Scraper ring
15 Oil pump
16 Oil sump
17 Oil drain plug
18 Bearing caps
19 Piston
20 Rod
21 Rod bearings
22 Bearing cap
23 Crankshaft

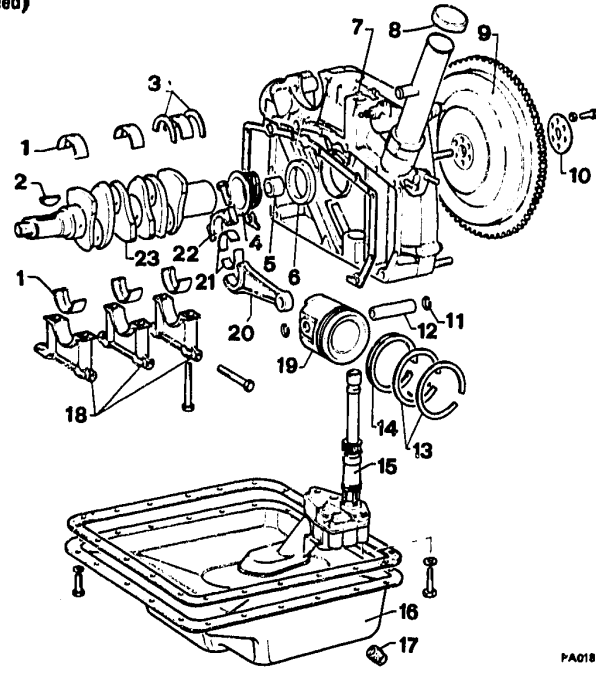

PA018D201

ENGINE DISMANTLING

1. Remove the oil filter, using the special tool.
2. Remove the dipstick.
3. Remove the minimum oil pressure sensor.
4. Remove the water temperature thermal contact.

- Remove the spark plugs, using the recommended socket wrench.

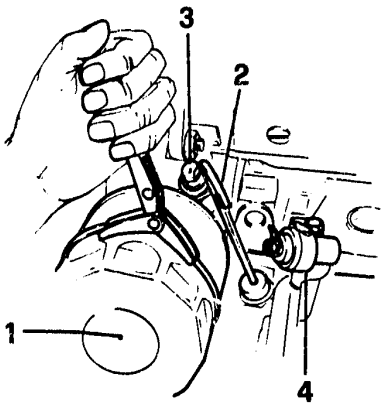

PA019D201

ENGINE DISASSEMBLY (Continued)

IGNITION DISTRIBUTOR

1. Remove the carburettor vacuum advance vent tube from the distributor.
2. Release the nut securing the distributor and remove the distributor.

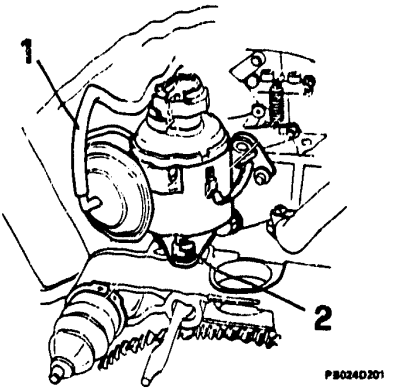

ENGINE DISMANTLING (continued)

ALTERNATOR

1. Unscrew the alternator mounting bolts.
2. Remove the drive belt.
   - Completely unscrew the mounting bolts.
3. Remove the alternator.
4. Remove the bracket attachment bolts.
5. Remove the brackets.

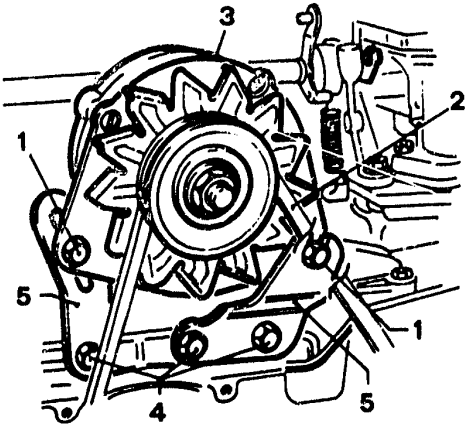

PA021D201

ENGINE DISMANTLING (continued)

TUBING

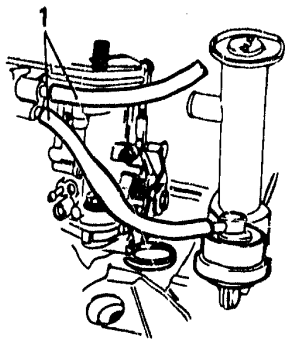

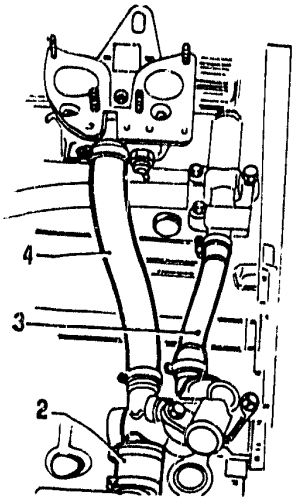

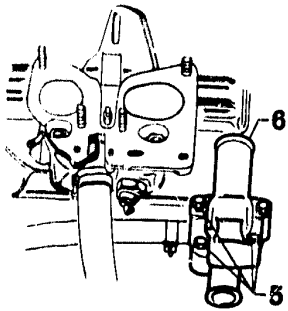

PA022D201

1. Disconnect the fuel supply hoses.
2. Loosen the clamp bolts on the connecting hose between the right manifold and the thermostat housing.
3. Loosen the clamp bolts on the connecting hose between the thermostat housing and the water inlet and remove the hose.
4. Loosen the clamp bolts on the connecting hose between the thermostat housing and the left manifold and remove the hose.
5. Unscrew and remove the water inlet to cylinder block attachment bolts.
6. Remove the water inlet.

ENGINE DISMANTLING (continued)

CARBURETORS

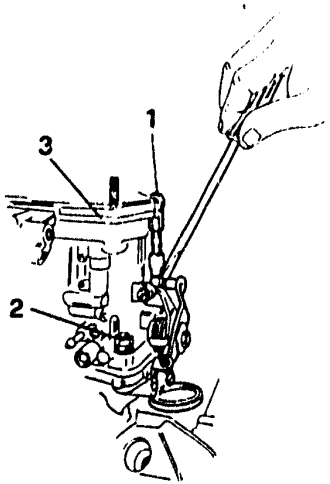

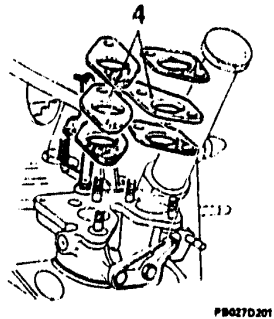

1. Detach the carburetor connection rods from the throttle levers.
2. Unscrew the carburetors to intake manifolds attachment bolts.
3. Remove the carburetors and gaskets.
4. Remove the spacers and gaskets.

ENGINE DISMANTLING (continued)

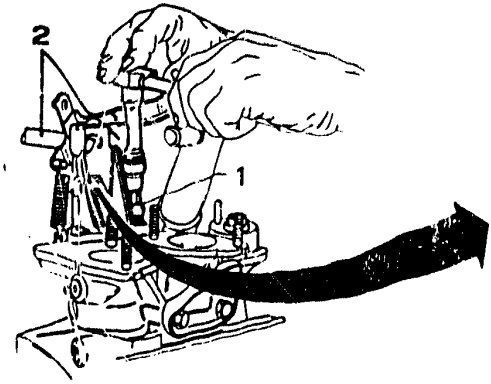

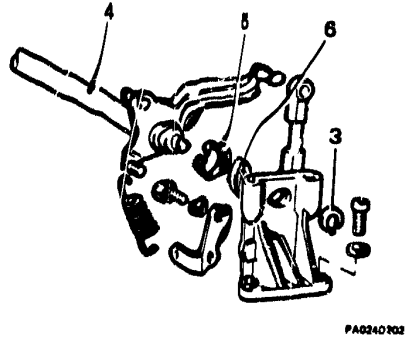

1. Unscrew the attachment bolts from the mountings on the intake manifolds.
2. Remove the mountings along with the valve control shaft.
3. If necessary, remove the retaining ring from the left mounting.
4. Remove the valve shaft from its mountings.
5. Remove the retaining rings from the mountings.
6. Take out the bearings, using the correct extraction tool.

ENGINE DISMANTLING (continued)
THERMOSTAT AND INTAKE MANIFOLD

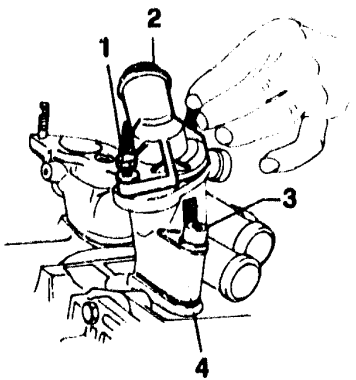

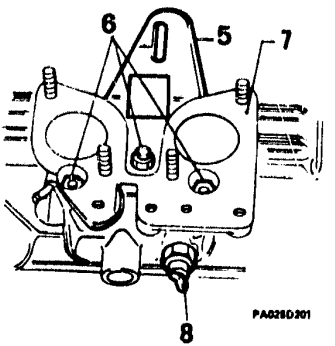

1. Unscrew the thermostat mounting bolts.
2. Remove the thermostat.
3. Unscrew the retaining bolt that attaches the thermostat housing to the cylinder block.
4. Remove the housing and the right intake manifold connecting hose.
5. Remove the engine lift U bolts from the intake manifold.
6. Unscrew the intake manifold to cylinder heads attaching nuts.
7. Remove the intake manifold.
8. Unscrew the water sender from the left intake manifold.

ENGINE DISMANTLING (continued)

FUEL PUMP

1. Unscrew the nuts and washers that attach the fuel pump to the rear cylinder block.
2. Remove the pump.
3. Remove the spacer and gaskets.
4. Remove the pump control cap.

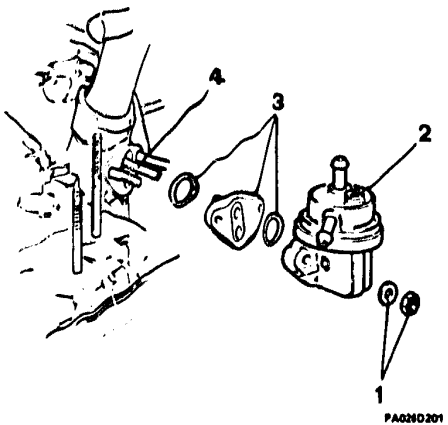

PA026D201

ENGINE DISMANTLING (continued)

TIMIMG BELTS

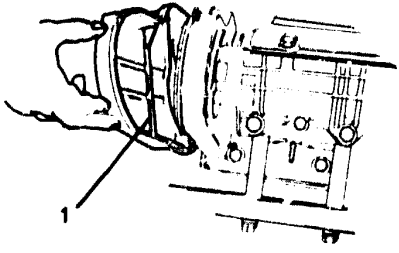

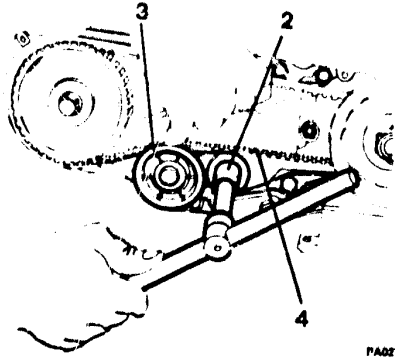

1. Unscrew the attaching bolts and remove the two front casing panels from the timing belts unit.
2. Loosen the lock nut on the right belt tensioner.
3. Push the roller back on its spring and tighten the nut in this position, leaving the timing belt slack.
4. Remove the belt from its sprocket on the camshaft and then from the sprocket on the crankshaft.

- Repeat the same procedure for the left hand belt.

ENGINE DISMANTLING (continued)
SPROCKETS AND BELT TENSIONER

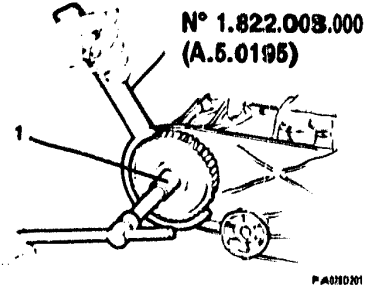

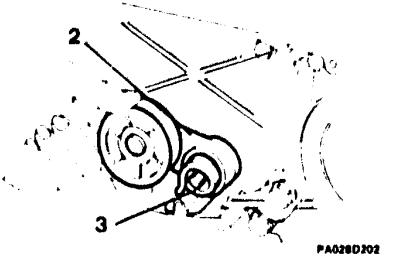

1. Remove the retaining bolts from the camshaft sprocket, blocking the rotation of the sprocket with toothed wrench N° 1.822.008.000 (A.5.0195), then remove the sprocket.
2. Unscrew the lock nut and remove the right belt tensioner.
3. Remove the spring.

ENGINE DISASSEMBLY (Continued)

WATER PUMP

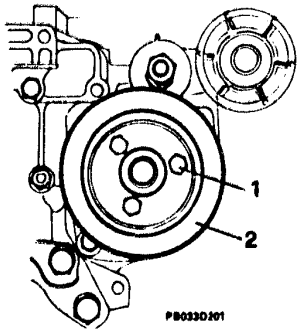

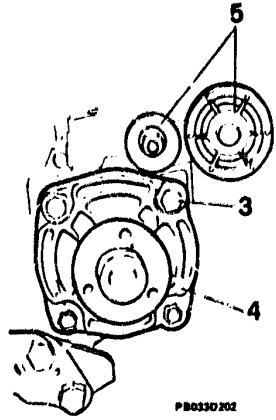

- Remove the guards of the rear timing belts.

1. Loosen the screws and washers securing the pulley to the water pump hub.
2. Remove the water pump pulley.
3. Unscrew the bolts that fasten the water pump on the cylinder block.
4. Remove the pump and gasket.
5. Unscrew the nut and remove the LH belt tensioner.

ENGINE DISMANTLING (continued)

FRONT ENGINE MOUNTING

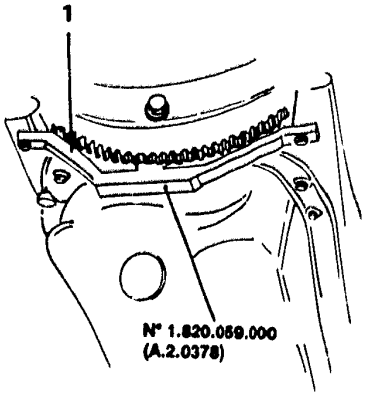

PA0300201

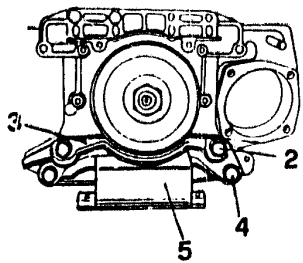

PB034D202

1. Block the flywheel with tool N° 1.820.059.000 (A.2.0378).
2. Unscrew the casing bolts.
3. Remove the casing.
4. Unscrew the mounting bolts.
5. Remove the front engine mounting.

ENGINE DISMANTLING (continued)

CRANKSHAFT SPROCKET

1. Unscrew the sprocket retaining nut.
2. Remove the washer.
3. Remove the spacer.
4. Remove the crankshaft pulley.
5. Remove the right cylinder head timing sprocket.
6. Remove the spacer.
7. Remove the left cylinder head timing sprocket.
8. Remove the belt guide washer.

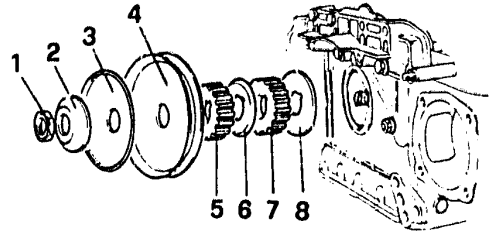

PR035D201

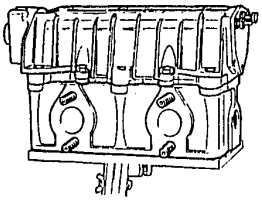

PA125D201

TWIN CARBURETOR ENGINES

ENGINE DISMANTLING (continued)

CYLINDER HEADS

ENGINE DISMANTLING

CYLINDER HEADS ..... 01 - 38
SUMP AND OIL PUMP ..... 01 - 39
REAR ENGINE BLOCK COVER ..... 01 - 40

PISTONS AND CONNECTING RODS ..... 01 - 41
FLYWHEEL AND
REAR ENGINE BLOCK COVER ..... 01 - 44
CRANKSHAFT ..... 01 - 46

CYLINDER HEADS

DISMANTLING ..... 01 - 48

ENGINE DISMANTLING (continued)

CYLINDER HEADS

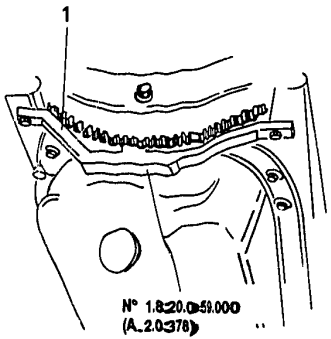

PA032D201

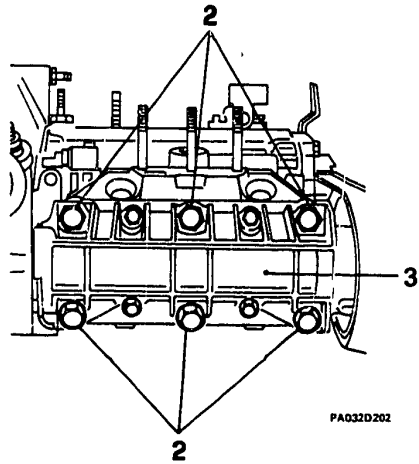

PA032D202

1. Remove the previously fitted flywheel blocking tool.
2. Unscrew the six bolts that attach the cylinder heads to the cylinder block.
3. Remove the heads along with the mountings for the camshafts and the cylinder block attachment gasket.

ENGINE DISMANTLING (continued)

SUMP AND OIL PUMP

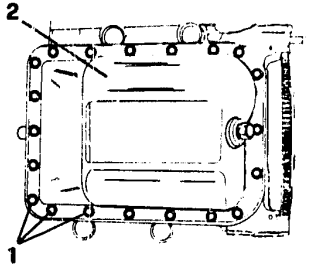

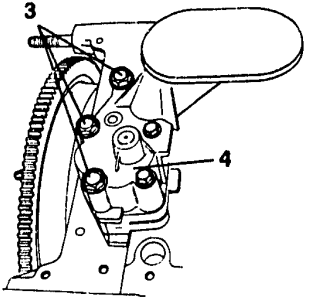

PA033D201

1. Unscrew the bolts and washers that attach the sump to the cylinder block.
2. Remove the sump and gasket.

- If necessary, remove any sealant residue on the sump and cylinder block.

3. Unscrew the bolts and washers that attach the oil pump to the rear cylinder block cover.
4. Detach the pump from the cylinder block, removing it in an upward direction.

ENGINE DISMANTLING (continued)

FRONT CYLINDER BLOCK COVER

1. Unscrew the cover retaining bolts, nuts and washers.
2. Remove the cover and gasket.
3. Remove the front oil sealring from the cover, levering it out with a screwdriver.

Use a new oil sealring when reassembling.

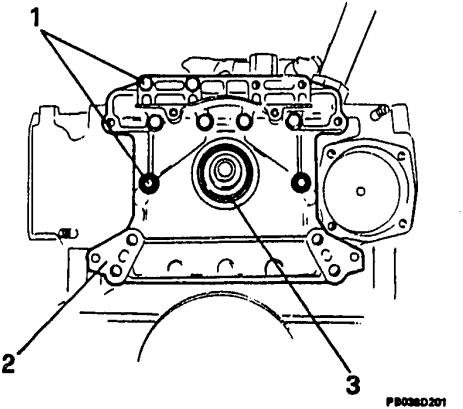

ENGINE DISMANTLING (continued)
PISTONS ANDCONNECTING RODS

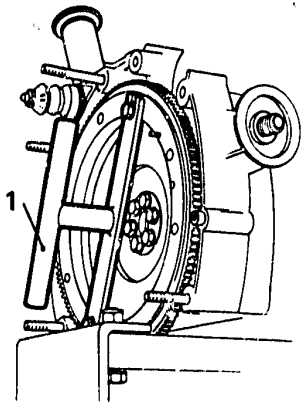

PA035D201

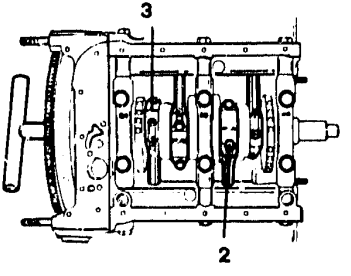

PA035D202

1. Attach the special tool to the flywheel that allows the crankshaft to rotate.
- Rotate the crankshaft to make the bearing cap retaining bolts accessible.
2. Loosen and remove the bearing cap retaining bolts.
3. Remove the bearing caps.

ENGINE DISMANTLING
PISTONS AND CONNECTING RODS (continued)

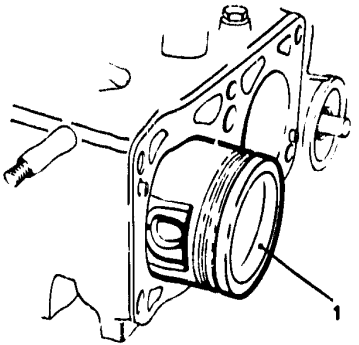

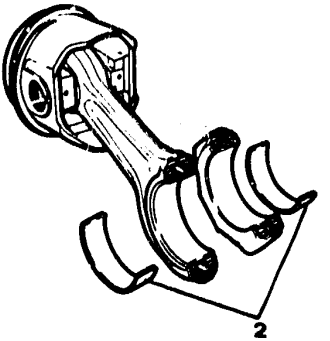

PA036D201

1. Withdraw the pistons, together with the rods, from the block, bringing them out from the side they are attached to.

2. Remove the bearings from the rod end and cap.

ENGINE DISMANTLING

PISTONS AND CONNECTING RODS (continued)

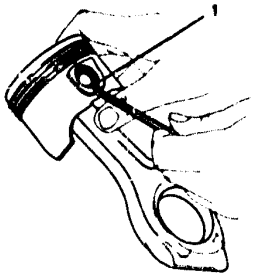

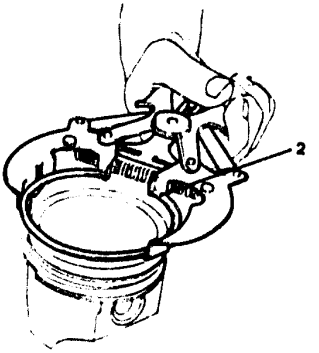

PA037D201

1. Use a screwdriver to extract the two piston pin retaining spring clips.
   - Extract the piston pin.
2. Remove the retaining rings and oil scraper from the piston.

ENGINE DISASSEMBLY (Continued)

ENGINE FLYWHEEL AND ENGINE BLOCK REAR COVER

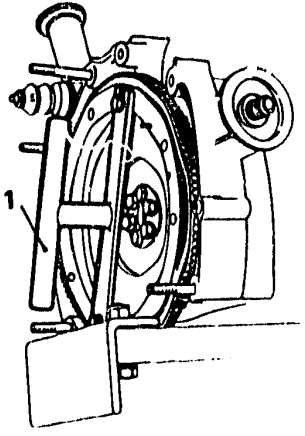

1. Remove the tool for turning the crankshaft, previously fitted on the flywheel.

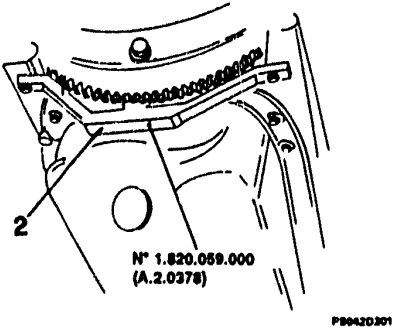

2. Block the flywheel with the special tool N° 1.820.059.000 (A.2.0378).

ENGINE DISASSEMBLY

ENGINE FLYWHEEL AND ENGINE BLOCK REAR COVER (Continued)

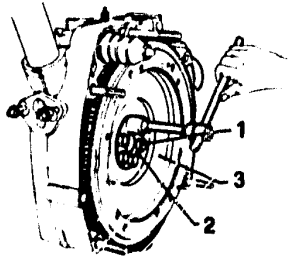

PB043D701

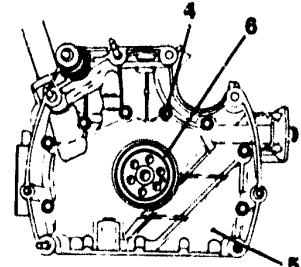

PB043D202

1. Unscrew and remove the bolts that hold the flywheel to the crankshaft.
2. Remove the safety washer.
3. Remove the flywheel.
4. Unscrew the cylinder block rear cover retaining bolts and washers.
5. Remove the rear cover and gasket.
6. Use a screw-driver to lever out the crankshaft rear oil seal ring.

The oil seal must be replaced when refitting.

ENGINE DISMANTLING (continued)
CRANKSHAFT

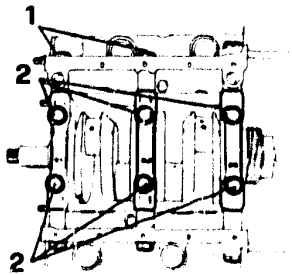

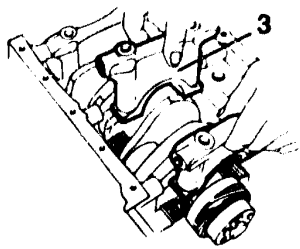

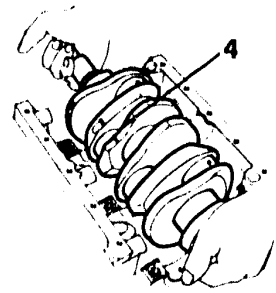

1. Unscrew the bolts that attach the bearing caps to the cylinder block.
2. Unscrew the bolts that attach the bearing caps to their mountings.
3. Remove the caps and lower main bearings.
4. Remove the crankshaft from the engine block and the upper main bearing halves.
- Take off the half ring locking tabs on the third mounting (flywheel side).

If the upper main bearing halves are to be re-used it is necessary to mark their position before removal.

ENGINE DISMANTLING
CRANKSHAFT (continued)

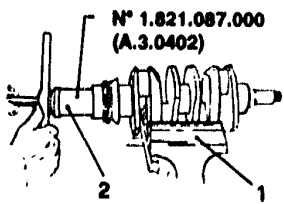

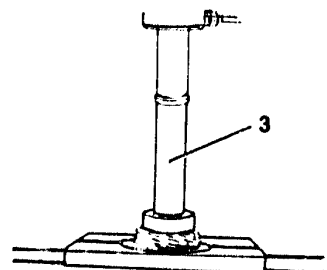

PA040D201

1. Fix the crankshaft in the vice.
2. Attach extraction tool N° 1.821.087.000 (A.3.0402) to the crankshaft and extract the rear transmission shaft guide.
3. Using the correct type of plate and a press, extract the oil pump gear and the distributor.

CYLINDER HEADS

DISMANTLING

- Fix cylinder head stand N° 1.820.012.000 (A.2.0195) in the vice.

1. Unscrew the nut on the stand.
2. Remove the pin from the stand. Insert tool N° 1.820.016.000 (A.2.0226) into the stand.

- Replace the pin and nut on the stand.
- Position the cylinder head on tool N° 1.820.016.000 (A.2.0226).

3. Unscrew the bolts that attach the rear camshaft cover to its fitting.
4. Remove the cover and gasket.
5. Loosen the bolts that attach the camshaft mounting to the cylinder head.
6. Remove the camshaft mounting and gasket, remembering to collect the remaining oil.

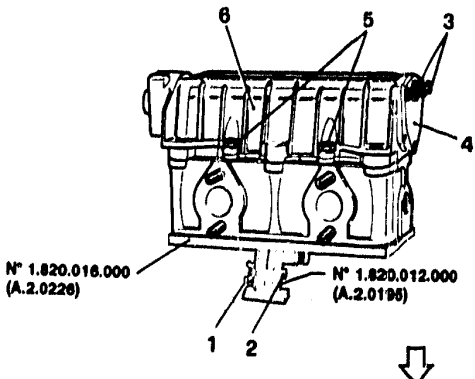

CYLINDER HEADS
DISMANTLING (continued)

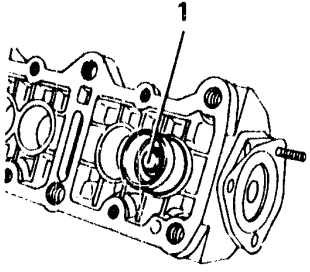

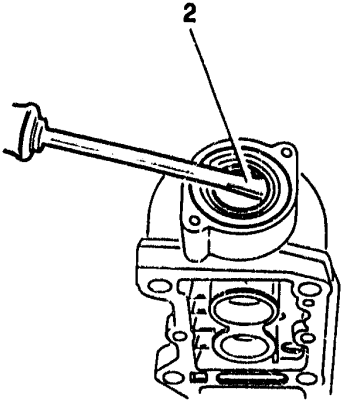

PA042D701

1. Remove the tappets from their housings on the mounting.
- Remove the camshaft, taking it out from the rear.
2. Use a screwdriver to extract the front oil seal ring from its seat on the camshaft mounting.

A new oil seal ring should be used when reassembling.

CYLINDER HEADS
DISMANTLING (continued)

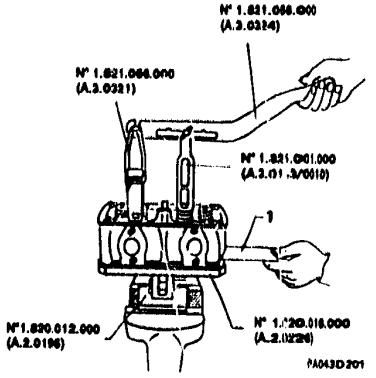

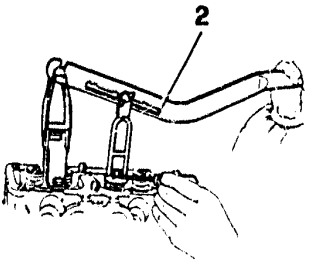

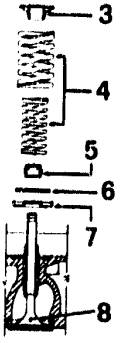

- Fit tools N° 1.821.056.000 (A.3.0321), N° 1.821.058.000 (A.3.0324) and N° 1 821.001.000 (A.3.0103/0010) to the cylinder head, for the extraction of the valves.

1. If it has not already been done, insert the valve retaining plate into cylinder head stand N° 1.820.016.000 (A.2.0226).
2. Applying pressure to lever N° 1.821.058.000 (A.3.0324) compress the spring and extract the cotter from the valve using a screwdriver.
3. Remove the upper caps.
4. Remove the inner and outer springs.
5. Remove the cap seals from the intake valves.
6. Remove the washers.
7. Remove the lower retainers.

- Repeat the same dismantling procedure for each valve.

8. Extract the valve retaining plate from the cylinder head stand and take out the valves from the lower side of the cylinder head.

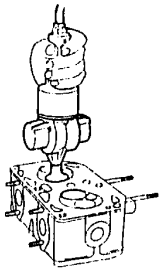

PA126D201

TWIN CARBURETOR ENGINES

INSPECTION AND CHECKS

INSPECTION AND CHECKS

CYLINDER HEAD LOWER
DECK INSPECTION ..... 01 - 51
VALVE GUIDES ..... 01 - 52
Clearance measurement ..... 01 - 52
Replacement ..... 01 - 53
VALVE SEATS ..... 01 - 54
Replacement ..... 01 - 56
VALVE FIT ..... 01 - 57
SPRINGS AND TAPPETS ..... 01 - 58
CAMSHAFT MOUNTING ..... 01 - 59

CAMSHAFT ..... 01 - 60

INSPECTION AND CHECKS

CYLINDER HEAD LOWER PLANE

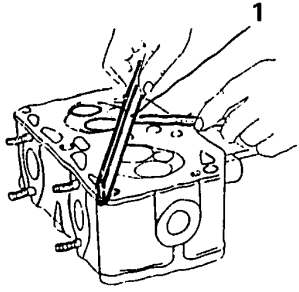

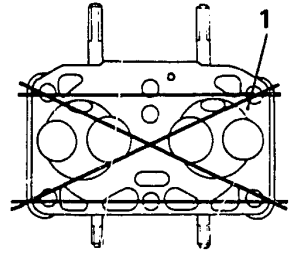

PA044D201

Make a visual inspection of the cylinder head for cracks and defects.

1. Check the flatness of the cylinder head lower deck, following the illustrated procedure.
- If the lower deck is excessively distorted, then both heads should be machined to level them off.

Check the finish on the cylinder head lower deck.

	Permitted surface finish mm	1.8×10^{-3}
	Cylinder head lower deck flatness tolerance mm	0.03
	Minimum head height after machining mm	77.676 ÷ 77.750
//	Maximum parallelism tolerance mm	0.05

Do not machine below the minimum head height, as this could cause serious damage in engine operation.

VALVE GUIDES
Clearance measurement

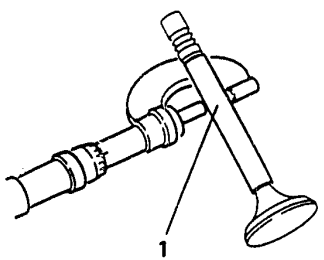

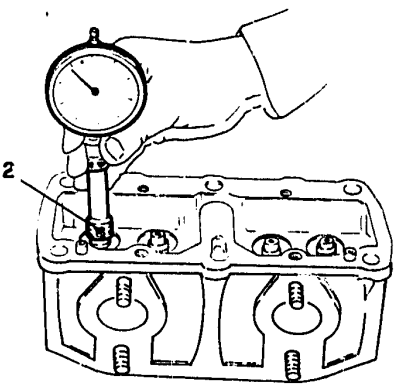

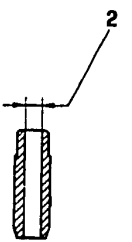

PA045D201

1. Using a micrometer, measure the stem diameter at three different points, at right-angles to each other.
2. Measure the internal valve guide diameter with a gage.

- Calculate the clearance by subtracting the maximum stem diameter from the valve guide diameter.

Maximum stem-to-valve guide clearance.	Intake: 0.046 mm
	Exhaust: 0.063 mm

VALVE GUIDES (continued)
Replacement

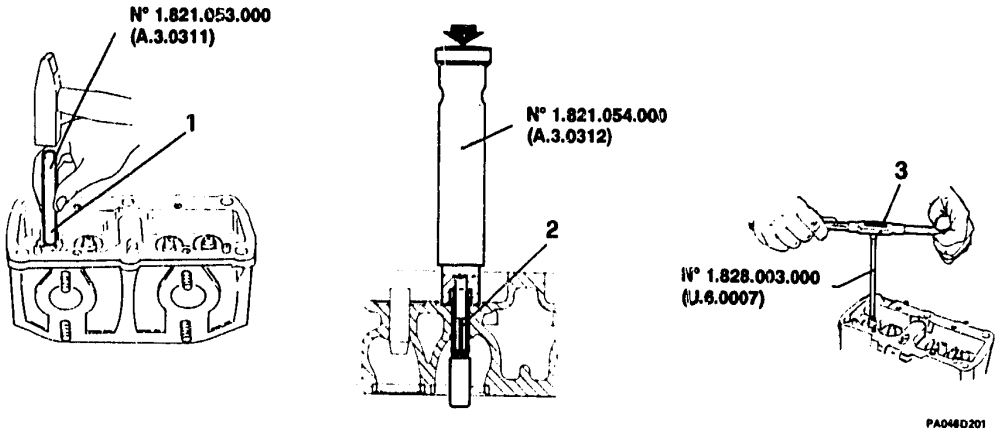

PA046D201

Make a visual check on the condition of the valve guide.

1. If necessary, extract the worn valve guides, using tool N° 1.821.053.000 (A.3.0311).
2. Insert the new valve guides, using tool N° 1.821.054.000 (A.3.0312).
3. Bore the valve guides to the specified diameter using bore tool N° 1.828.003.000 (U.6.0007)

- After boring, re-bore briefly to ensure that the seat and valve are perpendicular, and that the valves are in the corect operating position.

Ø	Valve guide internal diameter
	8.013 ÷ 8.031 mm

VALVE SEATS

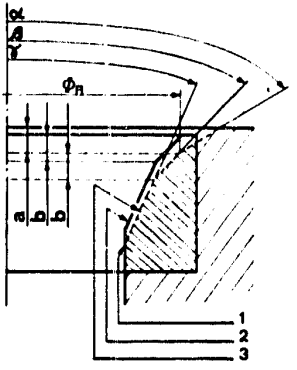

PA017D201

Ø	Reference diameter ØR	
	INTAKE	37.3 mm
	EXHAUST	31.9 mm

Level "a" regrind limit	2.9 mm

△	Upper valve seat band seat angle "α"	120°

Check the condition of the valve seats.

- If necessary, fit tool N° 1.820.016.000 (A.2.0226) and reface the valve seat, using the correct tool.
- This operation can be carried out only if the metal surface layer is thick enough to allow the removal of the defects whilst maintaining its specified profile; otherwise the valve seat should be replaced.

- Reface the valve contact surface of the seat to remove any signs of wear, to the specified seat angle "β".

△ **β = 90° ÷ 90°30'**

- The grinding limit is reached at level "a" on reference diameter $Ø_n$.

VALVE SEATS (continued)

- Machine the inner band of the seat to level "b" at seat angle γ.

Inner band height	
Intake	b = 1.07 ÷ 1.37 mm
exhaust	b = 1.26 ÷ 1.56 mm

Valve seat lower band seat angle	
Intake	γ = 50°
exhaust	γ = 30°

1. After machining, grind down the valve seats with the correct tool.
- For the grinding, use the specified grinding paste (SIPAL AREXONS Carbosilicium for Valves).

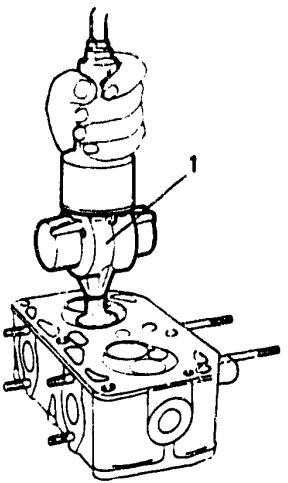

PA0480201

VALVE SEATS (continued)
Replacement

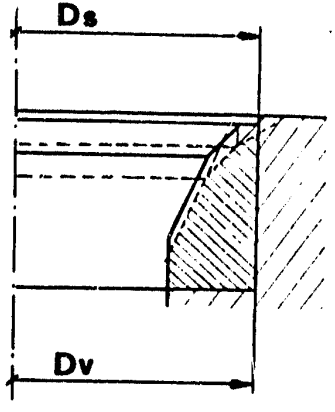

PA040D201

Ø

Outer valve seat diameter (Dv) mm	i.	40.075 ÷ 40.100
	e.	33.075 ÷ 33.100
Valve seat housing diameter (Ds) mm	a.	40.000 ÷ 40.025
	e.	32.900 ÷ 33.000
i. = intake valve e. = exhaust valve		

- Remove the worn valve seats, using the appropriate tool.
- Check that the new set of valve seats conform to the specifications in the table.
- Pre-heat the cylinder head in an oven to a temperature of 100° ÷ 120°C.
- Insert the new valve seats, using the correct tool.

VALVE FIT

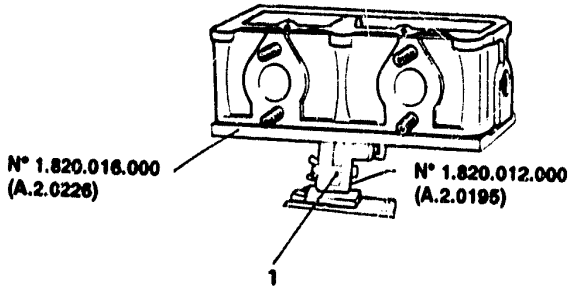

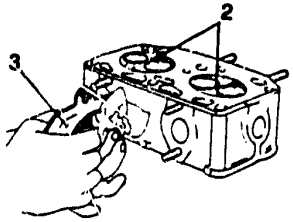

PA0600201

1. Position the cylinder head on tools N° 1.820.016.000 (A.2.0226) and N° 1.820.012.000 (A.2.0195), which have been previously fixed in a vice.
2. Fill the hollow of the combustion chamber with petrol.
3. Connect a low pressure air line to the intake tubes, and check that no air bubbles form in the petrol.

- Using the same method, check the seals on the exhaust valves by connecting the air line to the exhaust tubes.
- If air bubbles are noted, ensure that the valves fit perfectly into their seats and repeat the seal check operation; if the result is negative, then the valve seats must be reground.

SPRINGS AND TAPPETS

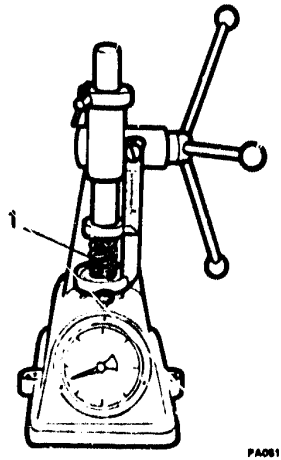

PA061D201

Load N (kg)	e.	425.32 ÷ 452.76 (43.4 ÷ 46.2)
	i.	194.53 ÷ 208.25 (19.85 ÷ 21.25)
Length under load mm	e.	25.25
	i.	25.25
e. = outer spring i. = inner spring		

Make a visual check to see whether the springs show evident signs of cracks or yielding.

1. Use a spring gage to check whether the spring characteristics comply with the specified values.

Check that there are no signs of seizing, scoring or abnormal wear on the outer surfaces of the tappets.

CAMSHAFT MOUNTING

Check the condition of the tappet seats and the camshaft pins.

1. Set the measuring instrument to the standard setting.
2. Measure the diameter of the camshaft mountings and check that they fall within the specified values.

Camshaft mountings diameter
Front = 35.015 ÷ 35.040 mm Central = 48.000 ÷ 48.025 mm Rear = 49.200 ÷ 49.225 mm

- With the same method, measure the diameter of the four tappet seats and ascertain the degree of clearance.

Tappet seats diameter	mm	35.000 ÷ 35.025
Tappet seats maximum clearance	mm	0.011 ÷ 0.052

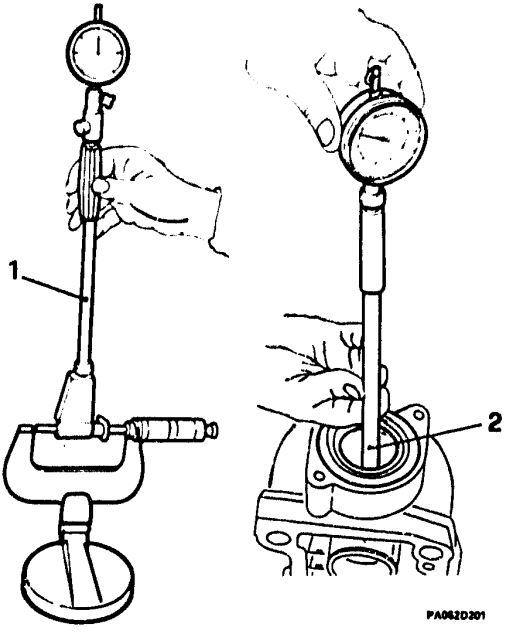

PA062D201

CAMSHAFT

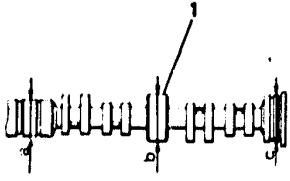

Carefully examine the work surfaces of the cams and camshaft journals and ensure that there is no evidence of scuffing, grouping, overheating or abnormal wear.

1. Measure the diameter of the camshaft journals with a micrometer.

Diameter of camshaft journals
Front a = 34.940 ÷ 34.962 mm
Central b = 47.940 ÷ 47.956 mm
Rear c = 49.140 ÷ 49.156 mm

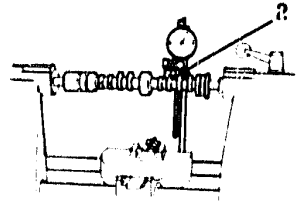

PA063D201

2. Measure the height of the cams with a dial gauge. If it is below the specified value replace the shaft.

Minimum height of cams mm	a.	9.8
	a.	9.0
i. = intake valve cam e. = exhaust valve cam		

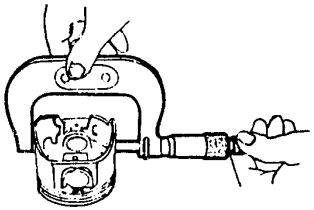

PA127D201

TWIN CARBURETOR ENGINES

INSPECTION AND CHECKS (continued)

INSPECTION AND CHECKS

CRANKSHAFT ..... 01 - 61
MAIN AND CONNECTING ROD BEARINGS ..... 01 - 63
PISTONS AND CONNECTING RODS ..... 01 - 64
FLYWHEEL ..... 01 - 65
CYLINDER BLOCK ..... 01 - 66
CYLINDER-PISTON MATING ..... 01 - 68

INSPECTION AND CHECKS (continued)

CRANKSHAFT

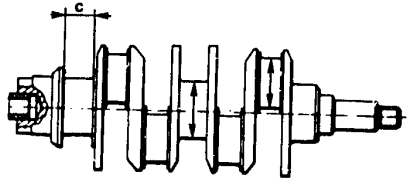

PA064D201

Check that the work surfaces of the journals and connecting rods do not show signs of abnormal wear, scoring, pitting or overheating.

- If necessary, rectify the shaft according to the undersize measurements listed in the table below.

Journals Ø mm	1°	59,690 ÷ 59,703
	2°	59.436 ÷ 59.449
	3°	59.182 ÷ 59.195
	4°	58.928 ÷ 58.941
Connecting rods Ø mm	1°	49.733 ÷ 49.746
	2°	49.479 ÷ 49.492
	3°	49.225 ÷ 49.238
	4°	49.971 ÷ 48.984

- Undersize main and connecting rod bearing replacement parts are available.
- If the rear journal shoulders have to be reground, this should be done to the length "c".

Length of rear journal "c"
28.764 ÷ 28.804 (1)

(1) The same thickness of material should be machined off from both journal shoulders.

CRANKSHAFT (continued)

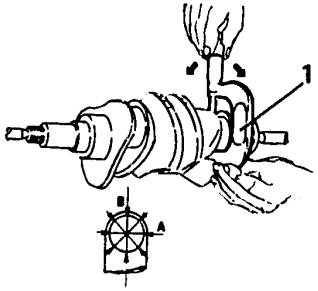

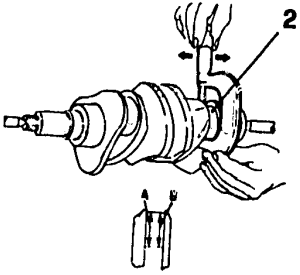

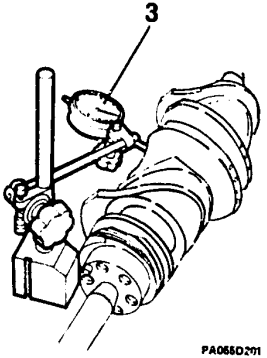

PA065D2?1

- After machining, thoroughly clean the oil passages with hot naphta and dry with compressed air.

1. Check the ovality of the connecting rod journals by comparing diameter measurements taken at various points on the circumference.

Maximum ovality tolerance
A - B = 0.020 mm

2. Check the taper on the connecting rod journals by comparing the diameter at the ends of the journals.

Maximum taper tolerance
A - B = 0.020 mm

3. Rotate the shaft on two tailstocks with the feeler pin of a comparator on the central journal and measure the ovality tolerance of the shaft.

MAIN AND CONNECTING ROD BEARINGS

- Clean the main bearings and connecting rod bearings and make a visual check for signs of scoring or seizing.
- If there are signs of excessive wear, replace all the bearings. The mating up of the rod bearings and the crankshaft must be done using parts in the same size class, indicated by colour markings on the side of the bearing that match with the colour marking on the corresponding connecting rod journal on the shaft.

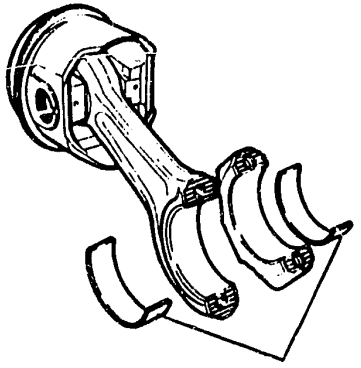

A064D201

PISTONS AND CONNECTING RODS

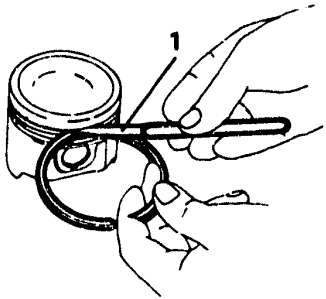

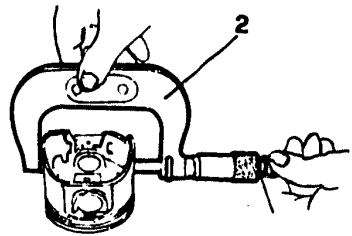

Make a visual check on the pistons and rods for cracks, scoring or signs of excessive wear.

1. Measure the clearance between the rings and seats on the pistons and check that clearances are within the specified values (see table "ASSEMBLY CLEARANCES AND INTERFERENCES").
2. Measure the diameter of the pistons with a micrometer and check that are within the specified values (see "CHARACTERISTICS AND TECHNICAL SPECIFICATIONS").

- In cases of rod - piston assembly decomposition, check that the piston pin seats on the small ends of the rods and on the piston hubs are not excessivley worn.

The piston pins should always be replaced.

FLYWHEEL

- Check that the teeth on the gear-ring are not chipped or scored; if they are, then the flywheel should be replaced.
- Check that the contact surfaces with the clutch-driven plate are not scored, and that there are no signs of material having been removed or of overheating. It is advisable to check first whether the work surface has not already been machined, and that there is a sufficiently thick layer of material to remove the defects with machining.
- For this purpose, ensure that the value "b" in the diagram is above the specified limit and that the surface metal layer is sufficient for machining.

Minimum limit value "b":
24.0 mm

- The machining should be done in such a way that the finish, flatness and parallelism tolerances are adhered to.

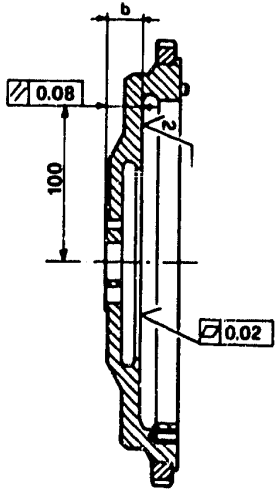

PA088D301

CYLINDER BLOCK

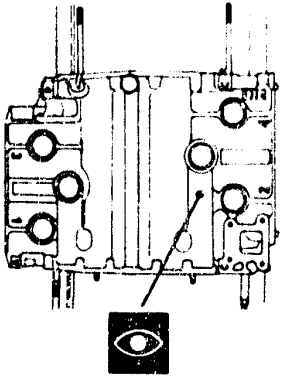

Make a visual check of the block for cracks or signs of excessive wear on the bearing surfaces. Check the surface finish on the cylinder bores.

Cylinder bore maximum surface roughness
1.0 µm

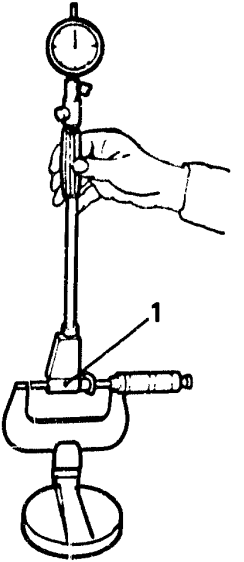

- Identify the cylinder bore class and proceed with the size measurement checks.

1. Set the bore measuring instrument with the help of a micrometer.

CYLINDER BLOCK (continued)

- Check the diameter of the bore at the depth indicated in the diagram and then measure the taper and ovality of the bore.

Maximum bore taper	**A - B = 0.02 mm**

Maximum bore ovality	**X - Y = 0.02 mm**

- Compare the measured values D with the standard values C corresponding to each class and define the maximum wear limit of the bores.

Maximum bore wear	**C - D = 0.04 mm**

- If values out of the tolerance range are found, then the cylinder bores should be re-bored.
For the dimensions see "TECHNICAL DATA AND SPECIFICATIONS".

The machining must be done so that the honing lines on the bores are crossed at an angle of 90° ÷ 120°.

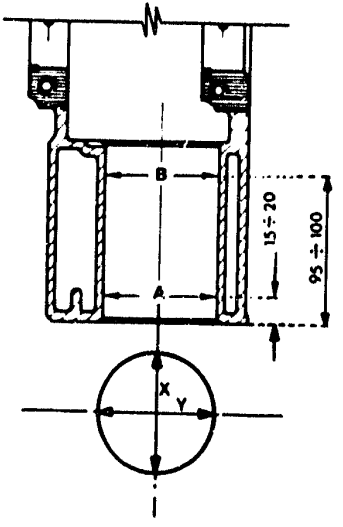

PA060D201

CYLINDER - PISTON MATING

- Cylinder-piston set mating is done by matching the letter for each cylinder stamped on the upper surface of the block with the same letter on the crown of each cylinder, or by matching the colour code on the piston with the table below.

Bore letter Ø code	Piston letter and colour code
A	A - blue
B	B - pink
C	C - green
D	D - yellow
E	E - white

If the letter on the block has been deleted, the selection should be made according to the letter on the piston that needs to be replaced; in this case, though, it is advised to take the diameter measurement of the cylinder bore.

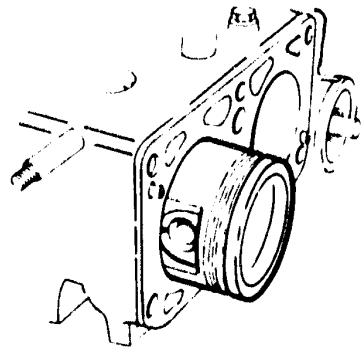

PA061D201

- For re-bored cylinders, the mating is done by matching the available replacement pistons, complete with rings and scraper, to the following oversize scale:
0.2 - 0.4 - 0.6 mm corresponding to the oversize of the cylinder bore.

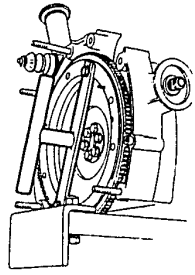

PA128D201

TWIN CARBURETOR ENGINES

ENGINE REASSEMBLY

ENGINE REASSEMBLY

CYLINDER HEADS ..... 01 - 69
PISTONS AND CONNECTING RODS ..... 01 - 71
CRANKSHAFT ..... 01 - 73
MAIN BEARINGS AND THRUST HALF RINGS ..... 01 - 74
MAIN BEARING CAPS ..... 01 - 75
ENGINE BLOCK REAR COVER ..... 01 - 77
FLYWHEEL ..... 01 - 78
PISTONS AND CONNECTING RODS ..... 01 - 80
CONNECTING ROD CAPS ..... 01 - 81
ENGINE BLOCK FRONT COVER AND FRONT ENGINE MOUNTING ..... 01 - 82

ENGINE REASSEMBLY

CYLINDER HEADS

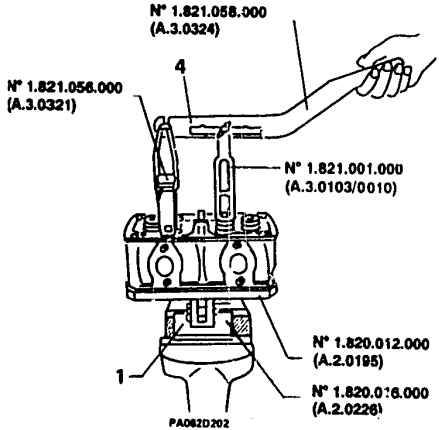

1. Position the cylinder head in the correct stand N° 1.820.012.000 (A.2.0195) and base N° 1.820.016.000 (A.2.0226), which has previously been secured in a vice.
2. Insert the lower retainers and washers into their seats.
3. Insert the cap seal, using tool N° 1.821.110.000 (A.3.0469).
   - Insert the valves into their seats on the head and close with the valve retainer plate.

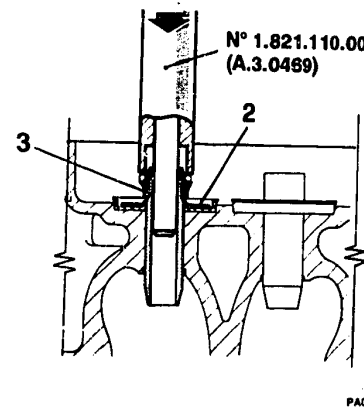

   - Insert the inner and outer springs and the upper caps on the valve stem.
4. Use tools N° 1.821.001.000 (A.3.0103/0010), N° 1.821.056.000 (A.3.0321) and N° 1.821.058.000 (A.3.0324) to fit the cotters.
   - Withdraw the valve retainer plate and check the valve fit.

⇩

ENGINE REASSEMBLY

CYLINDER HEADS (continued)

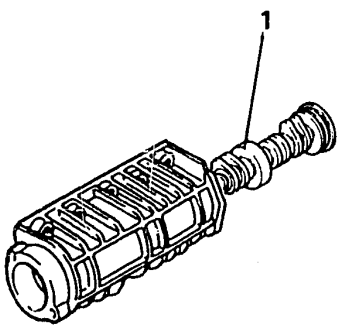

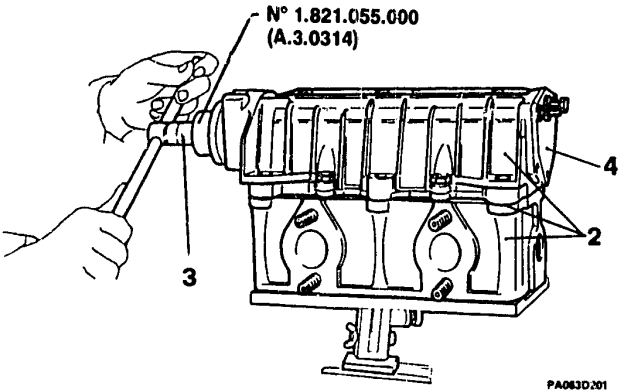

1. Insert the camshaft into its housing, gaining access from the rear.
- Insert the tappets into their seats on the camshaft mounting.
  Before assembling, lubricate the tappets and the camshaft with engine oil.
2. Attach the camshaft mounting with gasket to the cylinder head, tightening up the bolts in criss-cross order until they are fully tightened.
3. Fit the camshaft oil seal, using tool No. 1.821.055.000 (A.3.0314).Before fitting, lubricate the seal lip, outer surface and seat of the oil seal with engine oil.
4. Fit the rear cover to its mounting with a new gasket and screw in the three retaining bolts.

ENGINE REASSEMBLY (continued)

PISTONS AND CONNECTING RODS

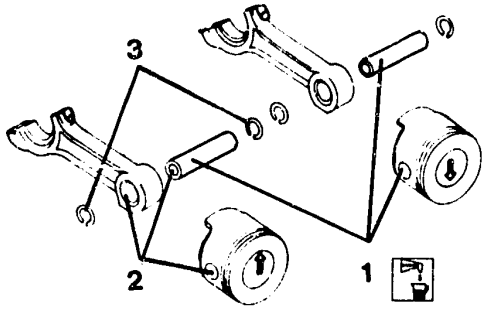

- Select the pistons according to the specifications in "CYLINDER - PISTON MATING".

1. Lubricate the piston pin, connecting rod small end and piston hub with engine oil.

- Position the connecting rod in the piston, making sure that the holes are centered correctly for the insertion of the piston pin.

2. Insert the piston pin into the piston and connecting rod.
3. Fix the piston pin in position with the two spring clips.

Position the pistons with the arrow stamped on the upper part pointing in the direction of rotation of the engine, which means the right cylinder head pistons should be pointing upward and the left head pistons downward.
Fit the connecting rods into the pistons so that the identification numbers and the arrows correspond to those in the diagram.

ENGINE REASSEMBLY

PISTONS AND CONNECTING RODS (continued)

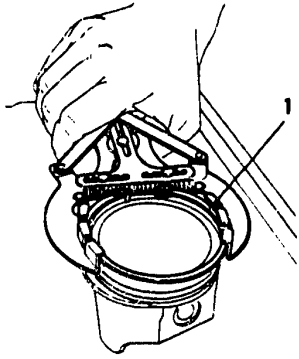

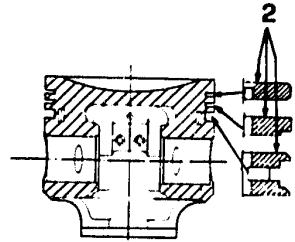

1. Insert the piston rings, fitting them into place with the correct grip tool.

2. Fit the rings so that the writing on the flat surface faces upward.

ENGINE REASSEMBLY (continued)
CRANKSHAFT

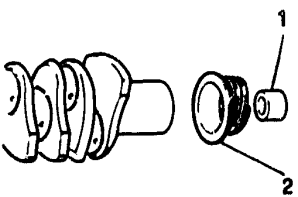

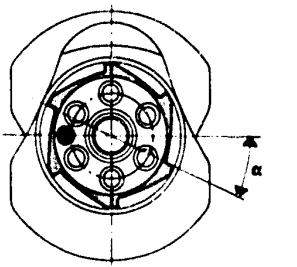

Rear crankshaft gear orientation
α = 24° ± 2°

1. Fit the rear crankshaft bush with tool N° 1.821.104.000 (A.3.0450).
2. Heat up the oil pump - distributor drive gear to 150°.C

– Fit the gear to the crankshaft, positioning it so that the flywheel centering dowel axis is at the specified angle α to the front face of a gear tooth.

ENGINE REASSEMBLY (continued)
MAIN BEARINGS AND THRUST HALF RINGS

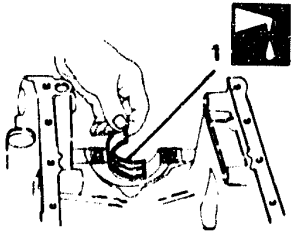

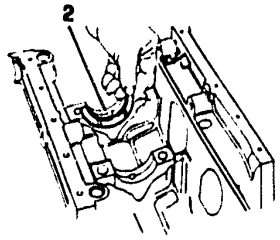

PA067D201

1. Fit the main bearings to the main bearing mountings and lubricate with oil.

Select the bearings on the basis of the diameter of the crankshaft main bearing journals.

2. Insert the thrust half rings into their seat on the third main bearing mounting.

The half rings should be fitted so that the lubrication channels are facing the crankshaft shoulders.

- Position the crankshaft on the main bearing mountings.

ENGINE REASSEMBLY (continued)

MAIN BEARING CAPS

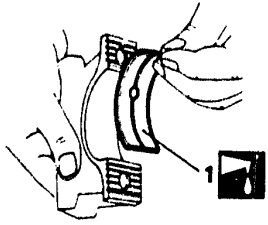

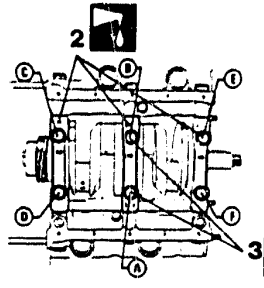

PB073D201

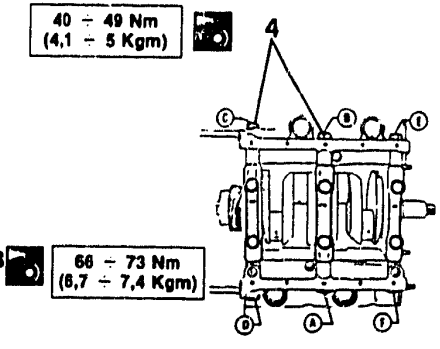

PB073D202

1. Fit the main bearings into the main bearing caps and lubricate with oil.
2. Fit the front, central and rear main bearing caps, together with their respective main bearings, on to the block mountings.
   - Lubricate the mountings with engine oil and screw the oiled bolts in, without tightening them fully.
3. Screw the main bearing cap bolts down into their block mountings, tightening them to the specified torque in two or three tightening actions, following the sequence shown in the illustration (from A to F).
4. Following this, screw the main bearing bolts down into their block mountings, tightening them to the specified torque in two or three tightening actions, following the illustrated sequence (from A to F).
   - When the bolts are tightened, lubricate the the mountings with engine oil and rotate the crankshaft by hand.

ENGINE REASSEMBLY (continued)

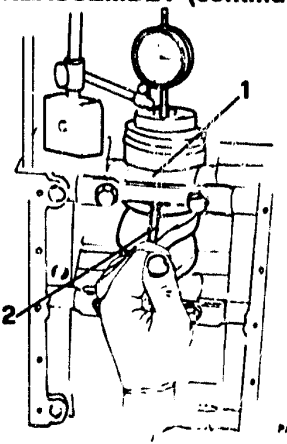

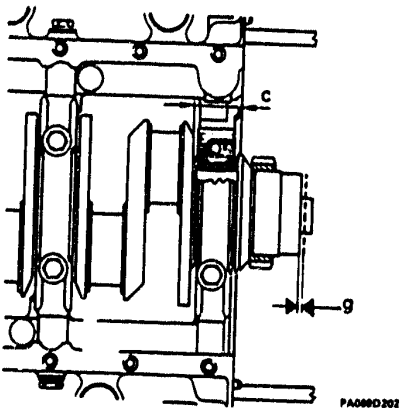

1. Place the feeler of a centesimal dial gage in contact with the crankshaft, parallel to the axis of the shaft.
2. Using a screwdriver, move the crankshaft on its axis and check on the gage that the end play "g" falls within the specified limits.

Drive shaft end play
g = 0,35 mm

- if the value exceeds the specified limits, and if the shaft has not already been re-ground, then the shoulders of the rear main bearing journals can be machined to length "c", making it possible to fit oversize thrust half rings in the rear main bearing journals.

Length "c" of rear main bearing journal
28.764 ÷ 28.804 mm

ENGINE REASSEMBLY (continued)

CYLINDER BLOCK REAR COVER

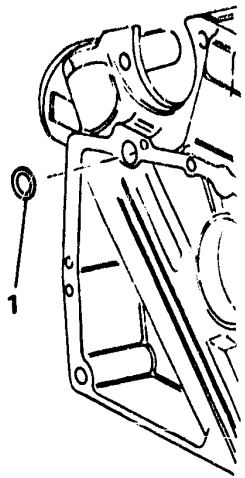

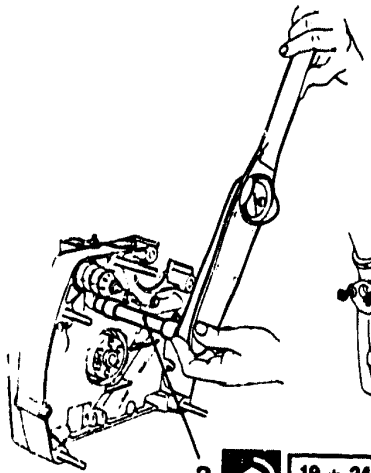

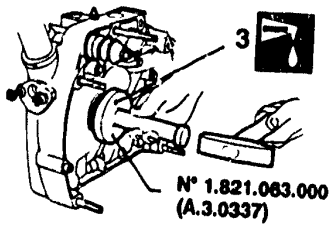

PA0700201

1. Insert the oil seal into the main oil inlet on the rear cylinder block cover.
- Fit the rear cover, with gasket, on to the block.
2. Tighten the cover mounting bolts to the specified torque.
3. Fit the rear crankshaft oil seal, using tool N° 1.821.063.000 (A.3.0337), after lubricating the seal lip, the external surface and the seat of the oil seal with engine oil.

ENGINE REASSEMBLY (Continued)

ENGINE FLYWHEEL

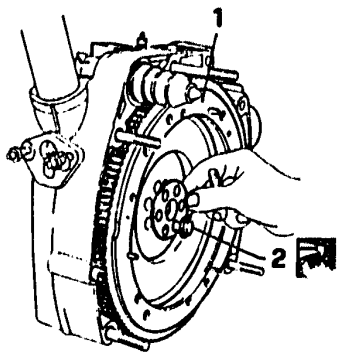

1. Position the flywheel on the crankshaft.
2. Lubricate and screw in the flywheel retaining bolts and safety washer without tightening them right down.

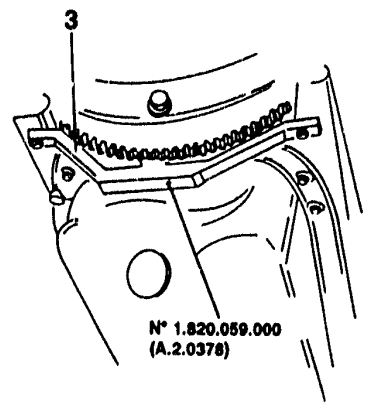

PB676D201

3. Block the rotation of the flywheel, using tool N° 1.820.059.000 (A.2.0378).

ENGINE REASSEMBLY
ENGINE FLYWHEEL (Continued)

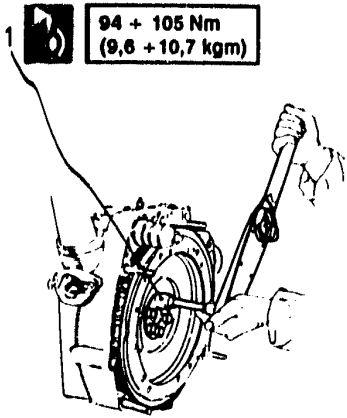

1. Tighten the retaining bolts to the specified torque.

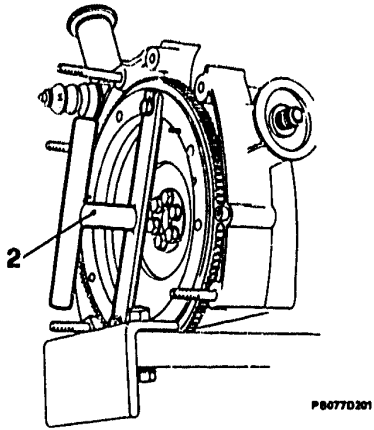

2. Fit a tool on the flywheel which allows the crankshaft to rotate, and remove the previously fitted blocking tool.

ENGINE REASSEMBLY (continued)
PISTONS AND CONNECTING RODS

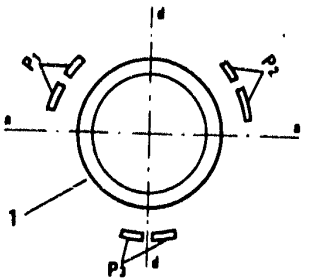

P1 upper ring position
P2 lower ring position
P3 oil scraper ring position
aa piston pin axis
dd direction of thrust

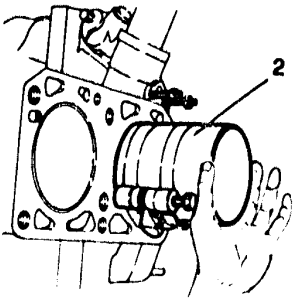

PA0712D2m

1. Position the piston rings so that the gaps are staggered in the way shown in the illustration.
- Fit the previously selected bearings on to the rod ends and respective caps.
2. Insert the pistons and connecting rods into the corresponding cylinders with the universal tool.

When fitting, position the pistons so that the arrow stamped on the top of the piston points in the direction of the revolution of the engine, which means that the right cylinder head pistons point upward and the left head pistons point downward.

ENGINE REASSEMBLY (continued)

CONNECTING ROD CAPS

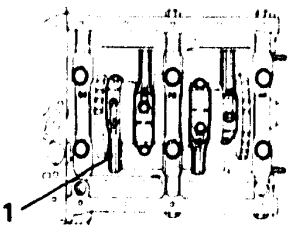

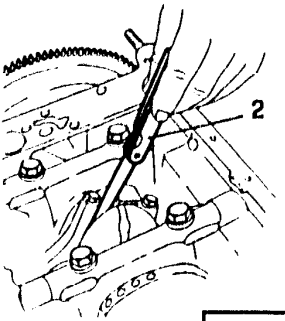

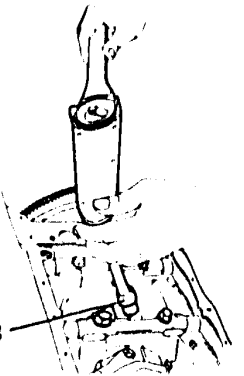

1. Fit the rod connecting caps and their respective bearings to the rod ends.
- Rotate the crankshaft to gain access to the bolts.i.
2. Before tightening the bolts fully, use a feeler gage to check the clearance between the crankshaft shoulder and the connecting rod - cap profile.

Clearance between crankshaft shoulder and connecting rod - cap profile
0.15 mm

43 ÷ 48 Nm (4,3 ÷4,9 kgm)

3. Tighten the bolts to the specified torque.

ENGINE REASSEMBLY (continued)
CYLINDER BLOCK FRONT COVER AND FRONT ENGINE MOUNTING

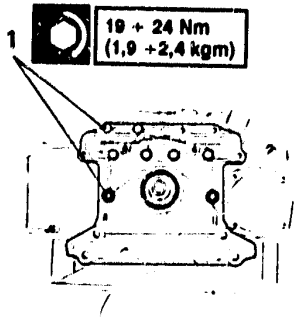

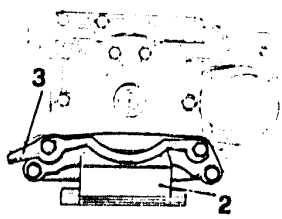

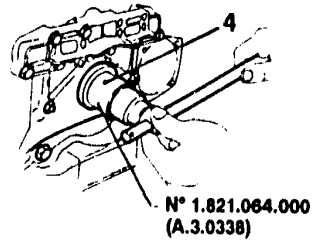

PA074D201

1. Attach the front cover with gasket to the cylinder block,tightening the bolts and nuts to the specified torque.
2. Attach the front engine mounting to the cover.
3. Attach the pulley protection casing to the cover.
4. Insert the oil seal into the crankshaft, using tool N° 1.821.064.000 (A.3.0338).

Before fitting, lubricate the seal lip and the work surface of the seal with engine oil.

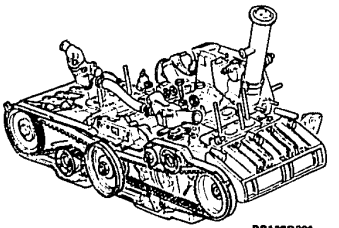

PB138D201

TWIN CARBURETTOR ENGINES

ENGINE REASSEMBLY (Continued)

ENGINE REASSEMBLY

WATER PUMP ..... 01 - 83
CYLINDER HEADS ..... 01 - 85
BELT TENSIONER ..... 01 - 87
TIMING BELT PULLEYS ..... 01 - 88
TIMING BELTS ..... 01 - 89
OIL PUMP ..... 01 - 93
OIL SUMP AND IGNITION DISTRIBUTOR ..... 01 - 94

ENGINE REASSEMBLY (Continued)

WATER PUMP

1. Fit the belt guide washer.
2. Fit the LH cylinder head timing toothed pulley.
3. Fit the spacer.
4. Fit the RH cylinder head timing toothed pulley.
5. Couple the crankshaft pulley.
6. Fit the spacer and washer.

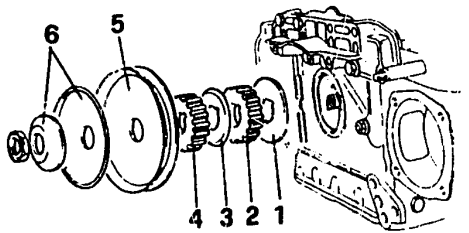

PB081D201

ENGINE REASSEMBLY

WATER PUMP (Continued)

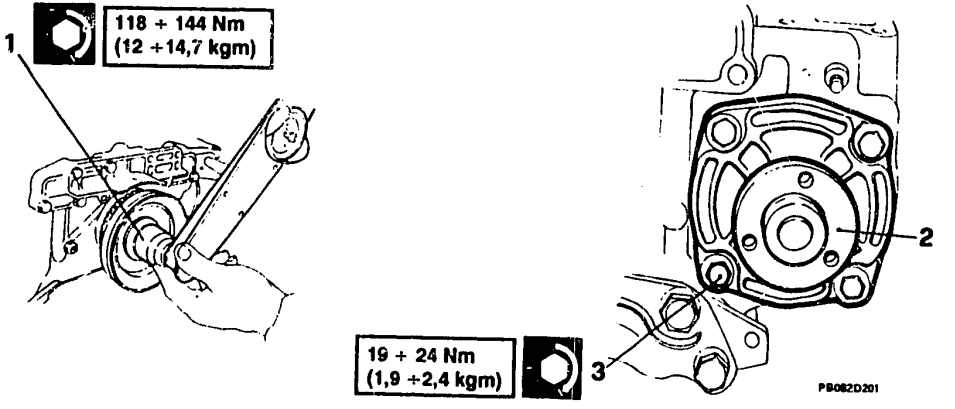

1. Tighten the pulley retaining nut to the specified torque, after first blocking the rotation of the flywheel.
- Place a new gasket on the pump.
2. Fit the pump to the block without the pulley.
3. Tighten the retaining bolts and washers to the specified torque.

ENGINE REASSEMBLY (continued)
CYLINDER HEADS

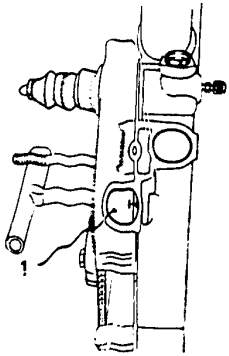

PA078D201

1. Rotate the crankshaft until cylinder N° 1 is at T.D.C in the ignition phase; this position can be checked by lining up notch "T" on the flywheel with the reference point on the rear cover.
- Put the camshafts into the rest position.

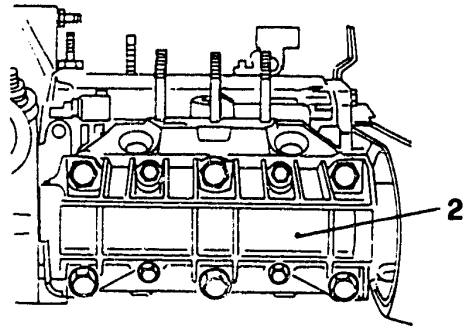

PA078D202

2. Fit the cylinder heads with gaskets and the camshaft mounting on to the block.

Whilst fitting, take special care with the valves that are in the open position and jutting out from the head, as they may knock against the block and get damaged.

ENGINE REASSEMBLY

CYLINDER HEADS (continued)

1. Oil the six cylinder head retaining nuts and screw them down to the specified torque with two or three tightening actions, following the sequence shown in the illustration (from A to F).
2. Tighten up the four bolts that attach the camshaft mountings to the cylinder heads to the specified torque, tightening in criss-cross order.

- When the engine has been installed in the vehicle, warm up the engine until the electric radiator cooling fan is activated, then, when the engine is cold, loosen, oil and re-tighten the cylinder head to cylinder block mounting bolts to the specified torque, in the order shown in the illustration

If the engine is in the vehicle, when using wrench extension N° 1.822.010.000 (A.5.0198), the torque values are:

for torque wrench with 300 mm arm:	**57 ÷ 62 Nm (5.8 ÷ 6.3 kgm)**
for torque wrench with 400 mm arm:	**62 ÷ 67 Nm (6.3 ÷ 6.8 kgm)**

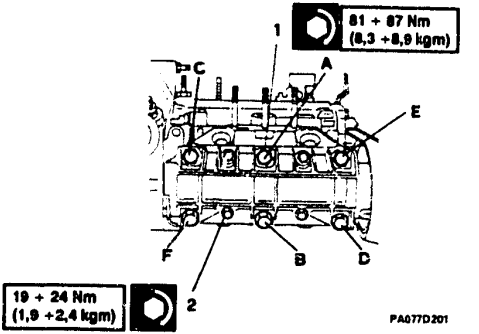

ENGINE REASSEMBLY (continued)

BELT TENSIONER

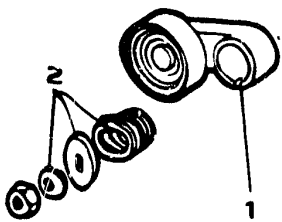

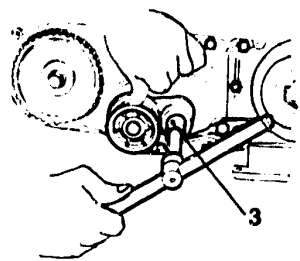

PA078D201

- Fit the rear timing belts protection cover.
1. Fit the belt tensioner mountings to the block pins.
2. Fit the spring and washers to the block pins.
3. Tighten the nuts on the belt tensioner assembly, after preloading the belt tensioner to allow the passage of the belt.

ENGINE REASSEMBLY (continued)

TIMING BELT SPROCKETS

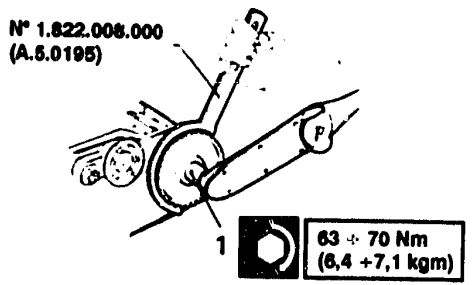

PA079D201

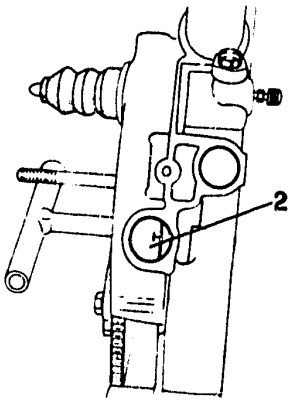

PA079D202

1. Fit the timing belt sprockets and tighten the retaining bolts to the specified torque, blocking the rotation of the pulley with wrench N° 1.822.008.000 (A.5.0195).

2. Check that the angle of the crankshaft corresponds to the T.D.C. of cylinder N. 1.

ENGINE REASSEMBLY (continued)

TIMING BELTS

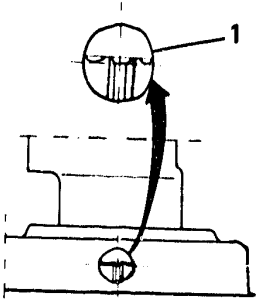

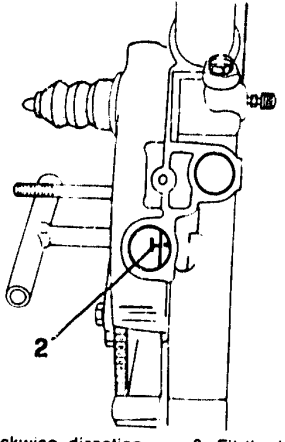

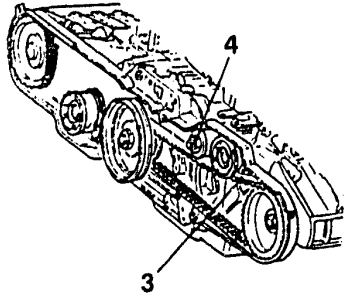

- Rotate the crankshaft in an anticlockwise direction (looking from the rear) through about 45°.

1. Position the crankshaft so that the tooth and the two grooves adjacent to the left camshaft sprocket can be seen through the hole in the rear cover.
2. Line notch "T" up with the fixed reference point.
3. Fit the left timing belt onto the sprockets.

The belt should be fitted with pulling part of the belt, on the side opposite to the tensioners, pulled taught.

4. Loosen the nut securing the belt tensioner so that it can exert the pressure conferred by the spring onto the belt. Tighten the nut.

ENGINE REASSEMBLY

TIMING BELTS (continued)

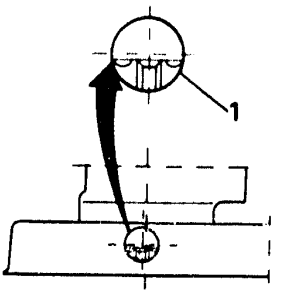

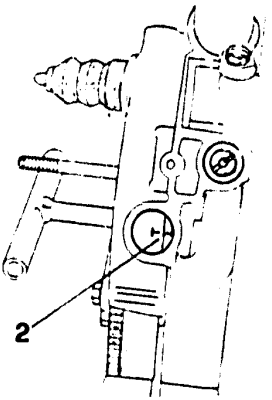

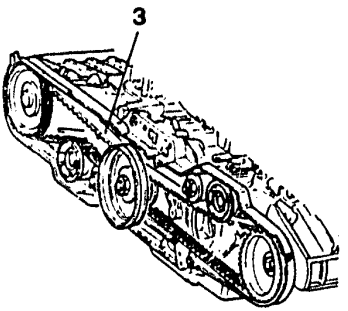

- Rotate the crankshaft through about 45° in an anticlockwise direction.

1. Position the right camshaft so that the tooth and two grooves adjacent to the right camshaft sprocket can be seen through the hole on the rear cover.
2. Line up notch "T" on the flywheel with the fixed reference point.
3. Fit the right timing belt on to the sprockets.

The sprocket will tend to rotate away from the correct position as the camshaft interacts with the intake valve on cylinder N.3. For this reason the correct wrench N° 1.822.008.000 (A.5.0195) should be used to keep the sprocket in the correct position for fitting the belt.

ENGINE REASSEMBLY

TIMING BELTS (continued)

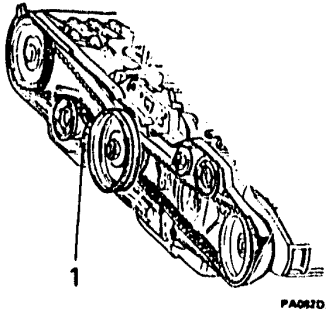

PA082D201

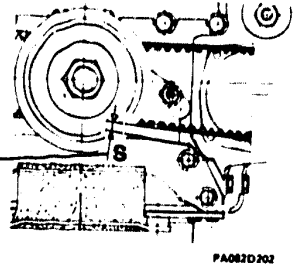

PA082D202

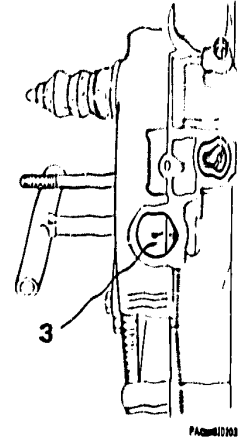

PA082D203

1. Loosen the belt tensioner retaining nut so that belt strain is taken up by the spring.
2. Check that distance "S" between the timing belt and the front engine mounting is not less than the minimum specified distance.

Minimum distance "S" between timing belts and front engine mounting	9 mm

- Rotate the crankshaft a number of times in its operating direction so that the belts can work in to their proper running position.
3. Rotate the crankshaft so that the notch "T" is lined up with the fixed reference point.
- Rotate the crankshaft again in an anticlockwise direction (seen from the rear) so that the notch ▽ on the flywheel is in line with the fixed reference point.

ENGINE REASSEMBLY

TIMING BELTS (continued)

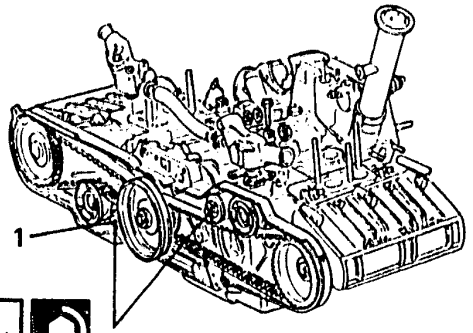

37 ÷ 46 Nm
(3,8 ÷4,7 kgm)

1. Loosen the nut on the right belt tensioner, then tighten it down to the specified torque.

During this operation, do not put pressure on the belt tensioner, as this may change the load on the belt tensioner itself.

- Repeat the same procedure for the left belt.
- On completion, use the holes on the rear timing case covers to recheck that the phasing of the sprockets with notch "T" on the flywheel is in line with the reference point.

ENGINE REASSEMBLY (continued)

OIL PUMP

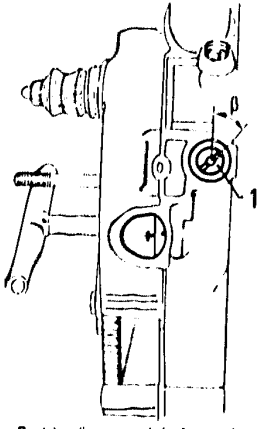

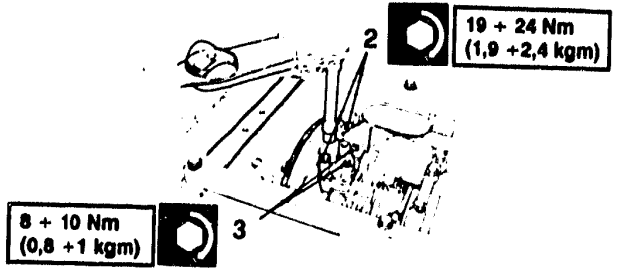

- Rotate the crankshaft so that piston N.1 is at T.D.C. in the ignition phase.

1. Rotate the pump shaft so that the distributor linkage is oriented at the specified angle B.

Distributor linkage orientation
B = 22°

2. Fit the pump to the rear cover, tightening the bolts to the specified torque.
3. Tighten the pump body to mounting retaining bolts to the specified torque.

ENGINE REASSEMBLY (continued)

OIL SUMP AND DISTRIBUTOR

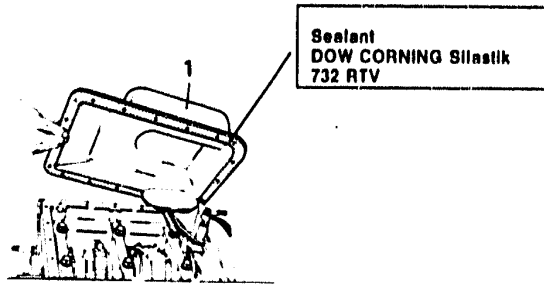



1. Fit the oil sump with gasket and fully tighten the retaining bolts.
- Before fitting, spread the recommended sealant evenly on the gasket.

Before applying the sealant, remove all traces of old sealant that may have remained on the surfaces with a de-greasing agent.

2. Mount the distributor on the engine end plate. Rotate the distributor so that the rotor arm points towards the reference mark on the distributor body.
3. Tighten the retaining nut that attaches the distributor to the rear cylinder block casing.

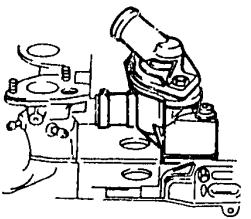

PA130D2I1

TWIN CARBURETOR ENGINES

ENGINE REASSEMBLY (continued)

ENGINE REASSEMBLY

FUEL PUMP ..... 01 - 95
WATER PUMP PULLEY ..... 01 - 96
INTAKE MANIFOLD AND WATER INLET ... 01 - 97

THERMAL CONTACT AND THERMOSTAT 01 - 98
CARBURETORS ..... 01 - 100
ALTERNATOR ..... 01 - 102

ENGINE REASSEMBLY (continued)

FUEL PUMP

1. Fit the spacer and gaskets on to the two studs that attach the pump to the rear cover.
2. Lubricate the pump drive cap and insert it into its seat.
3. Fit the pump body.
4. Attach the pump body with the two retaining nuts, tightening them to the specified torque.

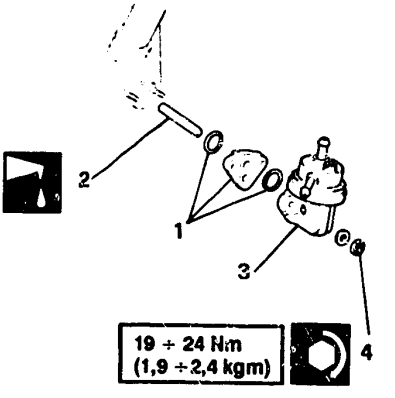

PA086D201

ENGINE REASSEMBLY (continued)

WATER PUMP PULLEY

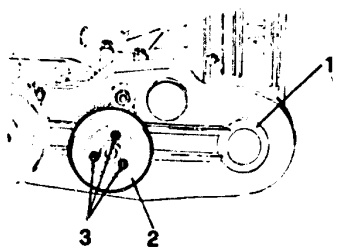

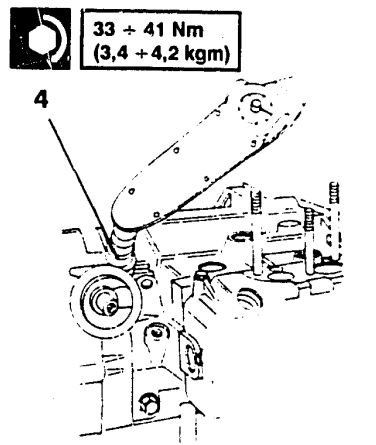

1. Fit the timing case front plastic protective cover.
2. Fit the pulley to the water pump hub.
3. Screw down the three retaining bolts.
4. Screw the oil pressure sensor into its position on the rear cover, tightening to the specified torque.

ENGINE REASSEMBLY (continued)
INTAKE MANIFOLD AND WATER INLET

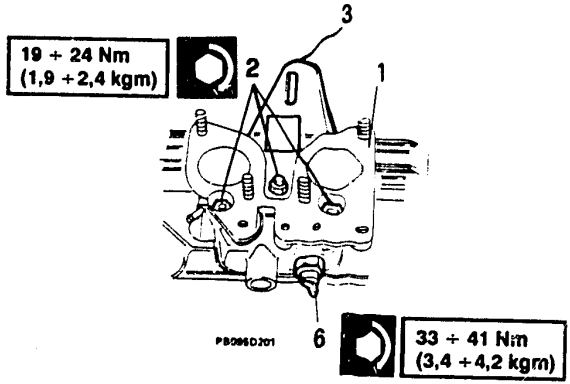

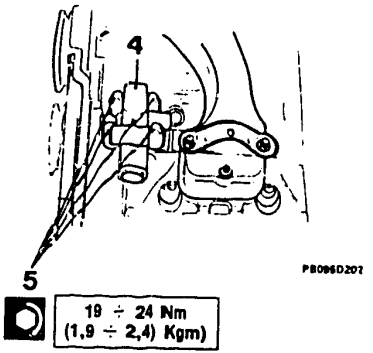

1. Fit the manifolds with gaskets on to the studs on the two cylinder heads.
2. Tighten the intake manifold retaining nuts to the specified torque.
3. Refit the engine lift U bolts.
4. Fit the water inlet on to the cylinder block.
5. Tighten the four water inlet mounting bolts to the specified torque.
6. Fit the sender to the inner side of left intake manifold.

ENGINE REASSEMBLY (continued)
THERMAL CONTACT AND THERMOSTAT

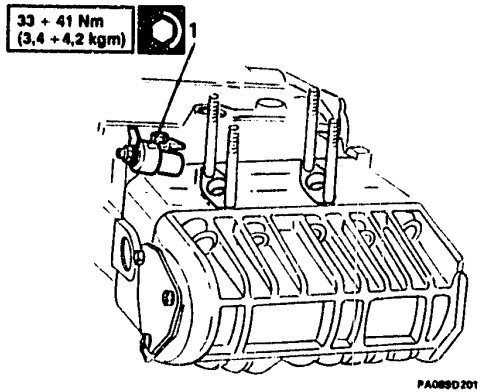

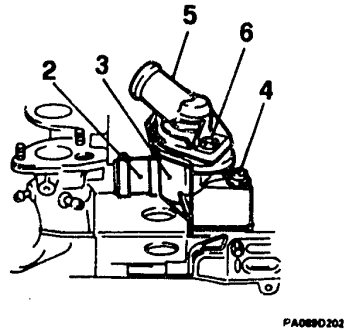

1. Fit the thermal contact, tightening the bolts to the specified torque.
2. Connect the correct hose to the thermostat housing and to the right intake manifold.
3. Fit the thermostat housing to the cylinder block.
4. Tighten the thermostat housing bolts.
5. Insert the thermostat into its housing.
6. Tighten the two thermostat retaining bolts.

ENGINE REASSEMBLY (continued)

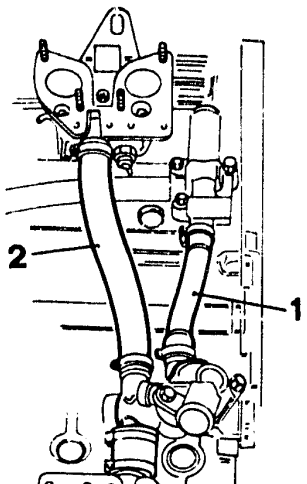

PA090D201

1. Fit the water inlet to thermostat housing connecting hose.
2. Fit the thermostat housing to left intake manifold connecting hose.

- Tighten all the screws on the hose clamps.

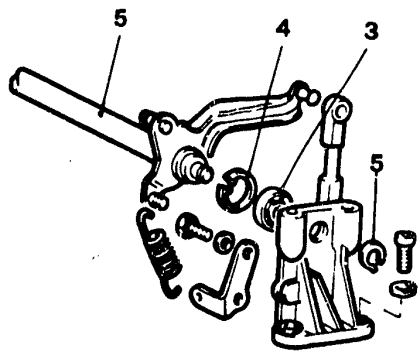

PA090D202

3. Insert the throttle valve shaft lever bearings.
4. Lock the bearings into position with the retaining rings.
5. Fit the throttle shaft in its mountings, then lock it into position with the retaining ring and attach it to the intake manifold.

ENGINE REASSEMBLY (continued)
CARBURETORS

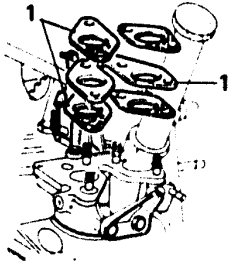

19 ÷ 24 Nm
(1,9 ÷ 2,4 kgm)

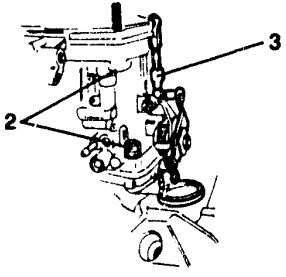

FA091D201

1. Fit the spacers and seals to the intake manifolds on the two cylinder heads.
2. Refit the carburetors on to the intake manifolds, tightening the retaining bolts to the specified torque.
3. Connect the connecting rods to the carburetor idling levers.

ENGINE REASSEMBLY (continued)

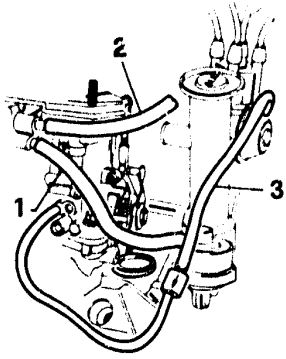

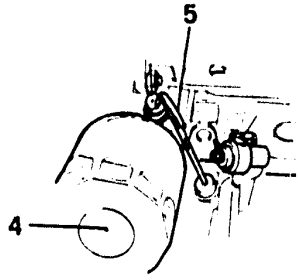

PA082D201

1. Connect the fuel pump fuel send tubing to the left carburetor.
2. Connect the left carburetor to right carburetor fuel send tubing.
3. Connect the vacuum send tube to the left carburetor.
4. Fit and hand-tighten the oil filter.
5. Insert the dipstick.

- Fit the spark plugs with a socket wrench, tightening them to the specified torque.

	25 ÷ 34 Nm (2.5 ÷ 3.5 kgm)

- Fit the distributor cap to the distributor and connect the spark plug leads to the spark plugs, following the firing order.

FIRING ORDER	1 - 3 - 2 - 4

ENGINE REASSEMBLY (continued)
ALTERNATOR

1. Attach the bracket to the front engine cover.
2. Tighten the screws securing the bracket.
3. Position the alternator on its supports.
4. Screw down the alternator retaining bolts without tightening them fully.
5. Fit the water pump-alternator belt to its pulleys.

- Adjust the belt tension to the correct value (see GR. 00).

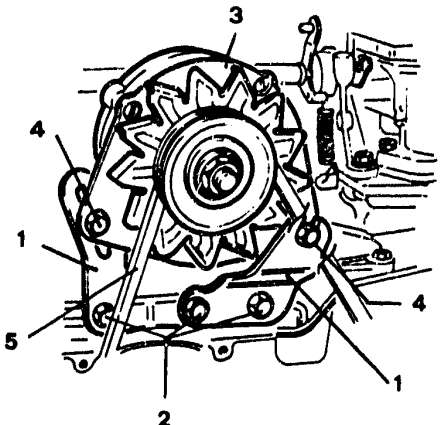

PA083D201

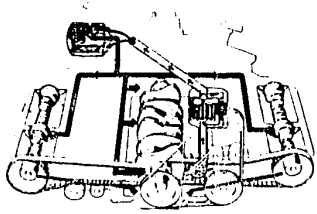

PA131D201

TWIN CARBURETOR ENGINES

LUBRICATION CIRCUIT

LUBRICATION CIRCUIT

DESCRIPTION ..... 01 - 103
OIL PUMP ..... 01 - 104
Oil pressure check ..... 01 - 104
Removal, Dismantling and Reassembly ..... 01 - 105
Inspection and checks ..... 01 - 106
Reassembly ..... 01 - 107

LUBRICATION CIRCUIT
DESCRIPTION

The lubrication system is a geared pump forced-type system.
The pump is mounted on the rear engine cover, and is worked by a shaft that takes drive from a gearing on the crankshaft.
The maximum oil pressure is controlled by a valve on the pump.

The incoming oil is completely filtered by a mesh-type filter and then by a cartridge filter on the oil sender, fitted with a safety by-pass valve in case the cartridge becomes blocked up.

The oil inlet, positioned on the rear engine cover, is fitted with oil vapour recirculation outlets for both maximum and minimum running levels.
Insufficient oil pressure is signalled on the instrument panel by a warning lamp linked to an oil pressure sensor inserted into the crankcase main channel.

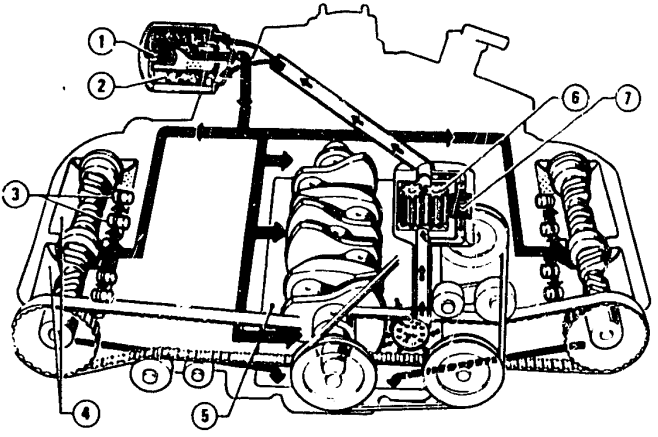

PA094D201

1 By-pass valve
2 Oil filter cartridge
3 Tappets
4 Camshaft supports
5 Oil sump
6 Pump gear
7 Pressure limiter valve

OIL PUMP
Oil pressure check

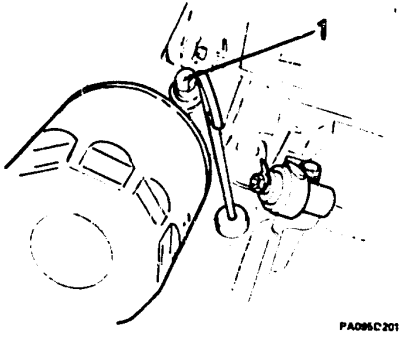

Engine r.p.m.	Engine oil pressure (bars)
At idle speed	1.18 - 2.75
at 5,500 r.p.m.	4.12 - 5.69

- Start the engine and run it until the oil is heated to a temperature of 90°C.

1. Remove the oil pressure sensor.

- Attach a manometer to the sensor bore.
- Start the engine and read the oil pressure on the manometer.
- Remove the manometer and refit the sensor.
- If the oil pressure is not within the limits listed in the table, then the oil pump needs checking.

OIL PUMP (continued)

Removal, Dismantling and Reassembly

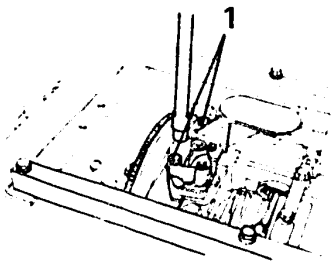

PA086D201

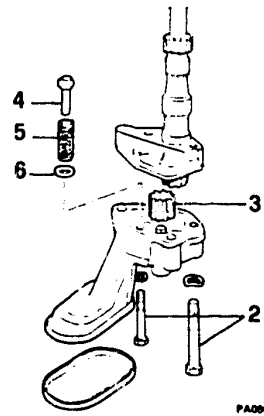

PA086D202

- Remove the fuel pump from the cover.
- Drain off the engine oil and remove the sump.

1. Unscrew the bolts and withdraw the pump from its seat.
2. Unscrew the pump body to support attaching bolts.
3. Remove the drive gear.
4. Remove the valve.
5. Remove the spring.
6. Remove the washer.

n Refit the pump, going through the removal steps in reverse order, and screw down the body to pump support bolts without tightening them fully.

- Rotate the shaft by hand, checking that there are no sticking points and that the rotation is regular.

OIL PUMP (continued)

Inspection and checks

1. Check the state of wear of the gears.
2. Check the condition oi the gear pin.
3. Check the condition of the pressure control valve and its seat on the pump body, and check that the spring on the valve shows no signs of fatigue.

- Finally, check that there are no signs of scoring or pitting on the work faces of the shaft and on the rear cover, on the fuel pump cap cam and on the distributor linkage.

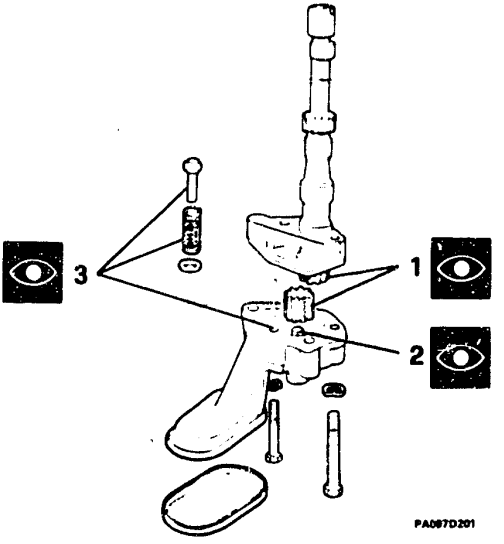

OIL PUMP (continued)

Reassembly

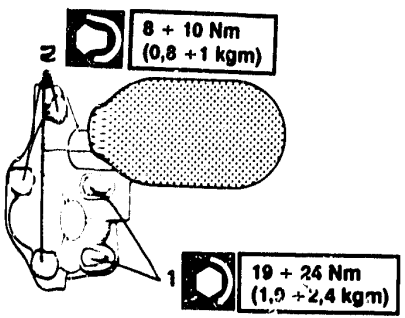

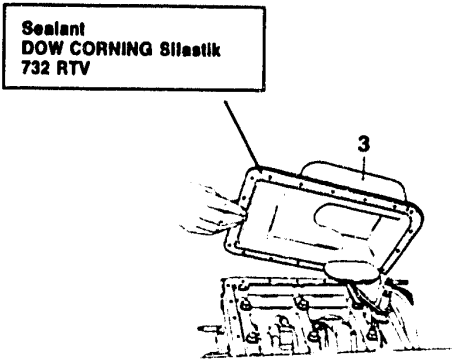

1. Screw down the pump to rear engine cover retaining bolts, tightening them to the specified torque.
2. Tighten the pump body to support retaining bolts to the specified torque.
3. Refit the sump with gasket and fully tighten the retaining bolts.

- Spread the recommended sealant evenly on to the gasket before fitting.
- Fill up with the recommended engine oil.

TWIN CARBURETOR ENGINES

TDS

TECHNICAL DATA AND SPECIFICATIONS

TECHNICAL DATA AND SPECIFICATIONS

ENGINE CHARACTERISTICS ..... 01 - 108
ENGINE BLOCK ..... 01 -109
CRANKSHAFT ..... 01 - 111
MAIN BEARINGS ..... 01 - 113
THRUST HALF RINGS ..... 01 - 113
FLYWHEEL ..... 01 - 114
PISTONS ..... 01 - 115
PISTON PINS ..... 01 - 116
PISTON RINGS ..... 01 - 116
CONNECTING RODS ..... 01 - 117
CONNECTING ROD BEARINGS ..... 01 - 117
CYLINDER HEADS ..... 01 - 118
VALVES ..... 01 - 119
VALVE SEAT REGRINDING ALLOWANCES ..... 01 - 119

CHARACTERISTICS AND TECHNICAL SPECIFICATIONS

ENGINE CHARACTERISTICS

Engine type		30743	30732	30734
Cycle		Eight 4/stroke		
Number of cylinders		4 horizontally opposed		
Fuel system		two double-body carburetors		
Bore - stroke Capacity	mm cm³	80 × 59 1186	80 × 67.2 1351	84 × 67.2 1490
Combustion chamber volume	cm³	37	39.7	44
Compression ratio		9:1	9.5:1	9.5:1
Maximum power DIN	kW (CV)	57 (77.7) at 6000 rpm	63 (92) a 6000 giri/min.	77 (105) at 6000 rpm
Maximum torque DIN	Nm (Kgm)	95 (9.7) at 4500 rpm	119 (12.4) a 4000 giri/min.	133 (13.9) at 4500 rpm

CYLINDER BLOCK

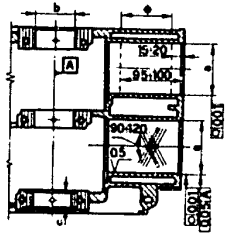

PA100D201

* Dimensions check zone

STANDARD DIMENSIONS			ENGINES 30743 – 30732	
			CYLINDERS 1 – 3	CYLINDERS 2 – 4
Cylinder bore diameter "a" mm	Standard	cl. A	80.010 ÷ 80.020	80.000 ÷ 80.010
		cl. B	80.020 ÷ 80.030	80.010 ÷ 80.020
		cl. C	80.030 ÷ 80.040	80.020 ÷ 80.030
		cl. D	80.040 ÷ 80.050	80.030 ÷ 80.040
		cl. E	80.050 ÷ 80.060	80.040 ÷ 80.050
	Oversize	1ª	80.210 ÷ 80.220	80.200 ÷ 80.210
		2ª	80.410 ÷ 80.420	80.400 ÷ 80.410
		3ª	80.610 ÷ 80.620	80.600 ÷ 80.610
Maximum perpendicularity tolerance between cylinder bore axis and block mounting axis mm			0.05	
Bore ovality and taper limit mm	As per diagram		0.01	
	Max		0.02	
Cylinder bore surface finish µm			(0.5 ÷ 1)	
Cylinder bore grinding angle			90° ÷ 120°	
Main bearing journal diameter "b"			63.663 ÷ 63.673	
Rear journal shoulder width "c" mm			23.68 ÷ 23.73	

(CONTINUED)

CYLINDER BLOCK (continued)

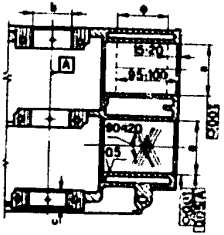

PA1000201

* Dimensions check zone

STANDARD DIMENSIONS			ENGINES 30734	
			CYLINDERS 1 – 3	CYLINDERS 2 – 4
Cylinder bore diameter "a" mm	Standard	cl. A	84.010 ÷ 84.020	84.000 ÷ 84.010
		cl. B	84.020 ÷ 84.030	84.010 ÷ 84.020
		cl. C	84.030 ÷ 84.040	84.020 ÷ 84.030
		cl. D	84.040 ÷ 84.050	84.030 ÷ 84.040
		cl. E	84.050 ÷ 84.060	84.040 ÷ 84.050
	Oversize	1°	84.210 ÷ 84.220	84.200 ÷ 84.210
		2°	84.410 ÷ 84.420	84.400 ÷ 84.410
		3°	84.610 ÷ 84.620	84.600 ÷ 84.610
Maximum perpendicularity tolerance between cylinder bore axis and block mounting axis mm			0.05	
Bore ovality and taper limit mm	As per diagram		0.01	
	Max		0.02	
Cylinder bore surface finish µm			(0.5 ÷ 1)	
Cylinder bore grinding angle			90° ÷ 120°	
Main bearing journal diameter "b"			63.663 ÷ 63.673	
Rear journal shoulder width "c" mm			23.68 ÷ 23.73	

CRANKSHAFT



FLYWHEEL CENTERING GRAIN

GEAR TOOTH

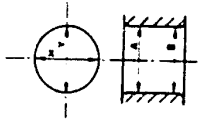

OVALITY X-Y

TAPER A A B

PA102D201

Unit mm

STANDARD DIMENSIONS			ENGINES 30743	30732	30734
Main bearing journal diameter "a"	Standard		59.944 ÷ 59.957		
	Undersize	1°	59.690 ÷ 59.703		
		2°	59.436 ÷ 59.449		
		3°	59.182 ÷ 59.195		
		4°	58.928 ÷ 58.941		
Connecting rod journal diameter "d"	Standard		49.984 ÷ 50.000		
	Undersize	1°	49.733 ÷ 49.746		
		2°	49.479 ÷ 49.492		
		3°	49.225 ÷ 49.238		
		4°	48.971 ÷ 48.984		
Length of rear main bearing journal "c"	Standard		28.51 ÷ 28.55		
	Oversize		28.764 ÷ 28.804 (1)		
Connecting radius R	Front and central main bearing journals		1.8 ÷ 2		
	Rear main bearing journal		1.5 ÷ 1.7		
	Connecting rod journal		3.3 ÷ 3.5		
Connecting section length "f"	Front main bearing journal		2.11 ÷ 2.81		
Cylinder section lengths "a"	Central main bearing journals		24.05 ÷ 24.15		
	Rear main bearing journals		24.22 ÷ 24.32		

(1) Machine the same thickness of material from each shoulder

(CONTINUED)

CRANKSHAFT (CONTINUED)

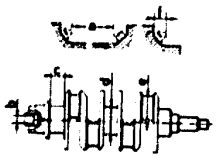

FLYWHEEL CENTERING GRAIN

GEAR TOOTH

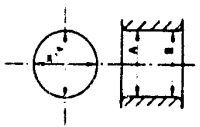

OVALITY X-Y

TAPER A A B

PA102D201

Unit mm

STANDARD DIMENSIONS		ENGINES		
		30743	30732	30734
Connecting rod and main journal bearing finish μm		0.16		
Ovality X-Y and taper A-B connecting rod and main bearing journals	As per diagram	0.006		
	Maximum	0.02		
Maximum parallelism tolerance between main bearing and connecting rod journals		0.015		
Maximum eccentricity between main bearing journals		0.02		
Maximum deviation between between the axes of the two sets of connecting rod journals and the main bearing journals axis		0.25		
Maximum perpendicularity tolerance between shoulder ring support plane and main bearing journals		0.03		
Crankshaft rear bush diameter "b"		16.065 ÷ 16.080		
Drive shaft rear gear orientation "α" (Oil pump/distributor drive)		24° ± 2°		

MAIN BEARINGS



PA102D201

Unit mm

STANDARD DIMENSIONS			ENGINES 30743	30732	30734
Thickness "a"	Standard		1.833 ÷ 1.839 (1) (3) 1.832 ÷ 1.841 (2)		
	Oversize	1°	1.959 ÷ 1.968		
		2°	2.085 ÷ 2.095		
		3°	2.213 ÷ 2.222		
		4°	2.340 ÷ 2.349		

(1) Supplier code 2782
(2) Supplier code 3062
(3) Supplier code 2115

THRUST HALF RINGS



PA104D202

Unit mm

STANDARD DIMENSIONS		ENGINES 30743	30732	30734
Thickness "a"	Standard	2.311 ÷ 2.362 (1) 2.310 ÷ 2.360 (2)		
	Oversize	2.437 ÷ 2.489		

(1) Supplier code 2115
(2) Supplier code 3062 (2782 d)

FLYWHEEL

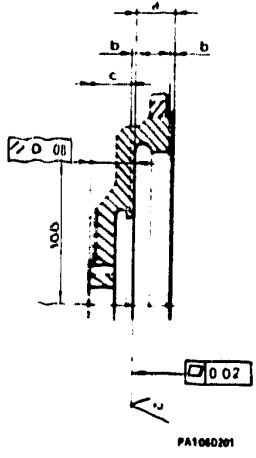

Unit: mm

STANDARD DIMENSIONS		ENGINES		
		30743	30732	30734
Machining allowances	a	24.0 ÷ 24.2		
	b	≤ 0.2		
	c	≥ 21.15		
Maximum parallelism tolerance between clutch-driven plate support surface and crankshaft flywheel support surface (measured on a 100 mm radius)		0.08		
Maximum flatness tolerance for clutch-driven plate support surface		0.02		
Clutch-driven plate support surface finish	µm	2		

NOTE: The material machined off, standard "b", from the clutch-driven plate support surface must be the same quantity as the material taken off the clutch pressure plate cover mounting surface, so that standard "a" is not varied. Standard "c" must not differ from the listed value.

PISTONS

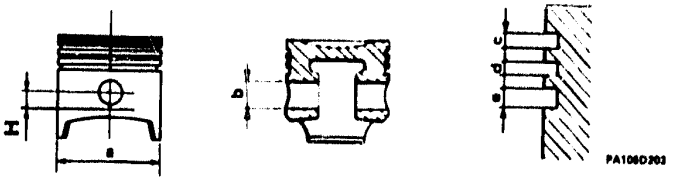

Unit of measurement: mm

STANDARD DIMENSIONS			ENGINES			
			30743	30732	30734	
			Mondial (1)	Mondial (2)	Mondial (3)	Borgo (4)
Piston diameter "a" (to be measured at right angles to piston pin bore at point "H" from the piston pin bore itself)	Standard	Class A (Blue)	79.960 ÷ 79.970	79.960 ÷ 79.970	83.960 ÷ 83.970	
		Class B (Pink)	79.970 ÷ 79.980	79.970 ÷ 79.980	83.970 ÷ 83.980	
		Class C (Green)	79.980 ÷ 79.990	79.980 ÷ 79.990	83.980 ÷ 83.990	
		Class D (Yellow)	79.990 ÷ 80.000	79.990 ÷ 80.000	83.990 ÷ 84.000	
		Class E (White)	80.000 ÷ 80.010	80.000 ÷ 80.010	84.000 ÷ 84.010	
	Oversize	1st	80.154 ÷ 80.170	80.154 ÷ 80.170	84.154 ÷ 84.170	84.150 ÷ 84.170
		2nd	80.354 ÷ 80.370	80.354 ÷ 80.370	84.354 ÷ 84.370	84.350 ÷ 84.370
		3rd	80.554 ÷ 80.570	80.554 ÷ 80.570	84.554 ÷ 84.570	84.550 ÷ 84.570
Height of first compression ring "c"			1.525 ÷ 1.545			
Height of second compression ring "d"			1.775 ÷ 1.795			
Height of oil scraper "e"			4.015 ÷ 4.035			
Piston pin bore diameter in piston "b"			21.004 ÷ 21.008			

(1) H = 7.6 mm (2) H = 11.5 mm (3) H = 13.9 mm (4) H = 15.5 mm

PISTON PINS

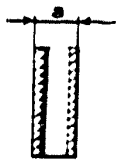

P.A1070201

Unit of measurement: mm

STANDARD DIMENSIONS	ENGINES		
	30743	30732	30734
Piston pin diameter "a"	20.993 ÷ 21.000		
Piston pin clearance	0.004 ÷ 0.012		

PISTON RINGS

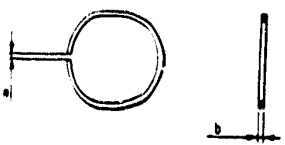

P.m1070202

Unit of measurement: mm

STANDARD DIMENSIONS		ENGINES		
		30743	30732	30734
Ring thickness "b"	First ring	1.478 ÷ 1.490		
	Second ring	1.728 ÷ 1.740		
	Oil scraper	3.978 ÷ 3.990		
Ring gap (1) "a"	First ring	0.30 ÷ 0.45		0.30 - 0.50 (2) 0.30 - 0.45 (3)
	Second ring	0.30 ÷ 0.45		0.30 - 0.50 (2) 0.30 - 0.45 (3)
	Oil scraper	0.25 ÷ 0.40		0.25 - 0.50 (2) 0.25 - 0.40 (3)
	Maximum gap for each ring	1		

(1) To be measured in the inside measurement ring or cylinder liner
(2) Goetze ring (3) Supplier code 2115

CONNECTING ROD

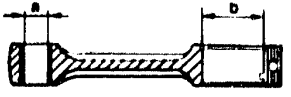

PA1280201

Unit of measurement: mm

STANDARD DIMENSIONS	ENGINES		
	30743	30732	30734
Rod small end bush bore "a"	21.007 ÷ 21.015		
Rod big end internal diameter "b"	53.696 ÷ 53.708		

CONNECTING ROD BEARING



PA1040201

Unit of measurement: mm

STANDARD DIMENSIONS			ENGINES		
			30743	30732	30734
Connecting rod bearing thickness "a"	Standard	Blue	1.830 ÷ 1.836		
		Red	1.826 ÷ 1.832		
	Oversize	1ª	1.956 ÷ 1.962		
		2ª	2.083 ÷ 2.089		
		3ª	2.210 ÷ 2.216		
		4ª	2.337 ÷ 2.343		

CYLINDER HEADS

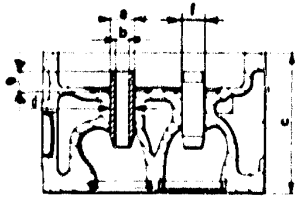

Unit of measurement mm

STANDARD DIMENSIONS		ENGINES 30743	30732	30734
Valve guide seat diameter "d"		13.000 ÷ 13.016		
Valve guide external diameter "a"	Set	13.050 ÷ 13.068		
	Replacement	13.064 ÷ 13.082		
Valve guide internal diameter (bore) "b"		8.013 ÷ 8.031		
Valve stem cap seal seat diameter "f"		10.85 ÷ 10.95		
Valve guide protrusion "e"		9.3 ÷ 9.5		
Minimum permitted cylinder head protrusion after machining "c" (1)		77.676 ÷ 77.750		
Maximum parallelism tolerance between head decks		0.05		
maximum flatness tolerance of head lower deck		0.03		
Head lower deck finish	µm	1.6		

(1) The machining of cylinder heads with hemispherical combustion chambers must be done on both heads in the same engine.

VALVES

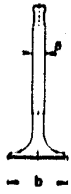

Unit of measurement mm

STANDARD DIMENSIONS		ENGINES		
		30743	30732	30734
Valve stem diameter "a"	Intake	7.985 ÷ 8.000		
	Exhaust	7.968 ÷ 7.983		
Valve head diameter "b"	Intake	39.700 ÷ 39.990		
	Exhaust	33.000 ÷ 33.200		

VALVE SEAT REGRINDING ALLOWANCES

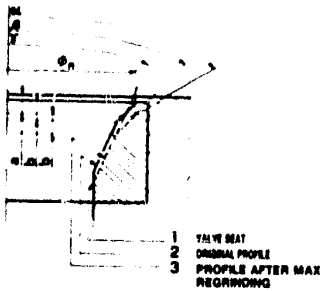

PA110D701

Unit of measurement mm

STANDARD DIMENSIONS		ENGINES		
		30743	30732	30734
Reference diameter "⌀R"	Intake	37.3		
	Exhaust	31.9		
Valve seat upper band regrind limit "a"		2.9		
Valve seat contact contact band regrind limit "b"	Intake	1.07 ÷ 1.37		
	Exhaust	1.26 ÷ 1.56		
Valve seat upper band taper limit "α"		120°		
Valve seat contact band taper limit "β"		90° ÷ 90°30'		
Valve seat inner band taper limit "γ"	Intake	50°		
	Exhaust	30°		

TWIN CARBURETOR ENGINES

TDS

TECHNICAL DATA AND SPECIFICATIONS (continued)

SPECIAL TOOLS

TECHNICAL DATA AND SPECIFICATIONS

SPRINGS ..... 01 - 120
CAMSHAFT HOUSING AND TAPPET VALVES ..... 01 - 120
CAMSHAFT ..... 01 - 121
ASSEMBLY CLEARANCES AND INTERFERENCE VALUES ..... 01 - 122
HEATING TEMPERATURES ..... 01 - 123
CHECKS AND ADJUSTMENTS ..... 01 - 124
Timing data ..... 01 - 124
Valve opening and closing angle checks ..... 01 - 125
FLUIDS AND LUBRICANTS ..... 01 - 126
SEALANTS AND FIXING AGENTS ..... 01 - 126
ABRASIVES ..... 01 - 126
TORQUE LEVELS ..... 01 - 127

SPECIAL TOOLS ..... 01 - 129

SPRINGS



PA127A101

Unit of measurement: mm

STANDARD DIMENSIONS			ENGINES		
			30743	30732	30734
Spring length with valve open "a"	Outer spring	mm	25.25		
	Inner spring	mm	25.25		
Spring load at length "a"	Outer spring N	(kg)	425.32 ÷ 452.76 (43.4 ÷ 46.2)		
	Inner spring N	(kg)	194.53 ÷ 208.25 (19.85 ÷ 21.25)		

CAMSHAFT MOUNTING AND TAPPET VALVES

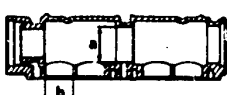

PA111D202

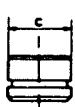

PA111D203

Unit of measurement: mm

STANDARD DIMENSIONS		ENGINES		
		30743	30732	30734
Camshaft pin seat diameter "a"	Front	35.015 ÷ 35.040		
	Central	48.000 ÷ 48.025		
	Rear	49.200 ÷ 49.225		
Tappet valve seat diameter "b"		35.000 ÷ 35.025		
Tappet diameter "c"		34.959 ÷ 34.975		

CAMSHAFT

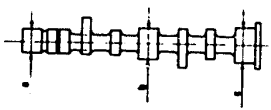

PA12/A101

Unit of measurement: mm

STANDARD DIMENSIONS		ENGINES		
		30743	30732	30734
Cam height	Intake	9.8		
	Exhaust	9.0		
Camshaft pin diameter	Front "a"	34.940 ÷ 34.962		
	Central "b"	47.940 ÷ 47.956		
	Rear "c"	49.140 ÷ 49.156		

ASSEMBLY CLEARANCE AND INTERFERENCE VALUES

Unit of measurement: mm

STANDARD DIMENSIONS		ENGINES		
		30743	30732	30734
Clearance between liner and piston	Standart	0.04 ÷ 0.06 (*)	0.03 ÷ 0.05 (**)	
	Oversize			
End play between piston rings and seats	First ring	0.035 ÷ 0.067		
	Second ring	0.035 ÷ 0.067		
	Oil scraper	0.025 ÷ 0.057		
Piston bore to piston pin clearance		0.004 ÷ 0.012		
Rod small end bush to piston pin clearance		0.007 ÷ 0.049		
Jpurnal to main bearing radial clearance		0.028 ÷ 0.063		
Journals to rod bearings radial clearance	Blue	0.024 ÷ 0.064		
	Red	0.032 ÷ 0.072		
crankshaft end play		0.056 ÷ 0.248		

(*) Cylinders 1 – 3 (**) Cylinders 2 – 4

(CONTINUED)

ASSEMBLY CLEARANCE AND INTERFERENCE VALUES (CONTINUED)

Unit of measurement: mm

STANDARD DIMENSIONS		ENGINES		
		30743	30732	30734
Radial clearance between journal and camshaft seat	Front	0.053 ± 0.01		
	Central - Rear	0.044 ÷ 0.085		
Radial play between tappet valve and seat on camshaft mounting		0.011 ÷ 0.052		
Radial play between valve stem and guide	Intake	0.013 ÷ 0.046		
	Exhaust	0.03 ÷ 0.063		
Interference between valve guide and guide seat	Intake	0.032 ÷ 0.068 (SERIAL) (0.046 ÷ 0.082 (REPLACEMENT)		
	Exhaust			

HEATING TEMPERATURES

PARTS	ENGINES		
	30743	30732	30734
Cylinder head heating for valve seat assembly	100° ÷ 120 °C		
Gear ring heating for fitting to flywheel	120° ÷ 140 °C		

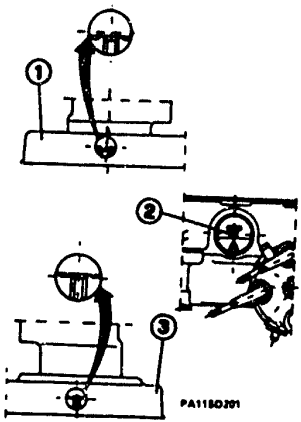

1 Rear guard for right - hand timing belt

2 T-shaped notch on flywheel

3 Rear guard for left - hand timing belt

Unit of measurement: mm

TIMING DATA		ENGINES		
		30743	30732	30734
Camshaft	Part numbers	60540324		
Backlash between lower cam radius and valve tappet crown	Intake	(*)		
	Exhaust	(*)		
Camshaft mounting timing reference angle	Right support	(**)		
	Left support	(***)		

(*) Engine with hydraulic tappet (with play taken up)

(**) Tooth with two grooves on the right camshaft sprocket, corresponding to the hole on rear cover 1 of the timing belt

(***) Tooth with two grooves on the left camshaft sprocket, corresponding to the hole on rear cover 3 of the timing belt

CHECK AND ADJUSTMENTS (continued)

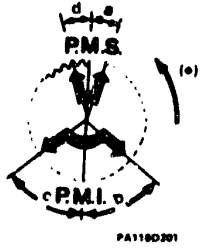

(*) crankshaft anticlockwise rotation direction seen from the flywheel side

VALVE OPENING AND CLOSING ANGLE CHECK			ENGINES		
			30743	30732	30734
Intake	Opening (before T.D.C.)	"a"	30°		
	Closing (after B.D.C.)	"b"	84°		
Exhaust	Opening (before B.D.C.)	"c"	68°		
	Closing (after T.D.C.)	"d"	34°		

FLUIDS AND LUBRICANTS

APPLICATION	TYPE	DENOMINATION	Q.TÀ (Kg)
Engine oil sump max level	OIL	AGIP NUOVO SINT 2000 10W/40 IP SINTIAX Motor Oil 10W/40 SELENIA SPECIAL FORMULA ALFA ROMEO 10W/40 (1)	3,6
Filter			0,5
Oil grooves			0,05
Periodic replacement of engine oil and filter			4,1

(1) Alternative product to be used for all countries except ITALY.

SEALANTS AND FIXING AGENTS

APPLICATION	TYPE	DENOMINATION	Q.TÀ (Kg)
Sump gasket. cylinder block-side (1)	SEALANT	DOW CORNING Silastik 732 RTV	-
Cylinder heads and cylinder block water circulation plugs (1)	SEALANT	LOCTITE 601 (green)	-

(1) Before applying, remove any traces of old fixing agent and degrease the surfaces with trichloroethylene or chlorothene.

ABRASIVES

APPLICATION	TYPE	DENOMINATION	Q.TÀ (Kg)
Valve and seat grinding	ABRASIVE	SIPAL AREXONS Carbosilicium for valves	-

TORQUE LEVELS

Unit of measurement Nm (Kgm)

DETAILS		ENGINES 30743	30732	30734
Rear and front cylinder block covers fixing bolts		19 ÷ 24 (1.9 ÷ 2.4)		
Camshaft sprocket fixing bolt (in oil)		63 ÷ 70 (6.4 ÷ 7.1)		
Main bearing caps to cylinder block mountings retaining bolts(in oil)		66 ÷ 73 (6.7 ÷ 7.4)		
Caps to cylinder block attaching bolts (in oil)		40 ÷ 49 (4.1 ÷ 5)		
Flywheel to crankshaft attaching bolts (in oil)		94 ÷ 105 (9.6 ÷ 10.7)		
Connecting rod caps retaining bolts		43 ÷ 48 (4.4 ÷ 4.9)		
crankshaft rear pulley fixing nut		118 ÷ 144 (12 ÷ 14.7)		
Belt tensioner to cylinder block retaining nut	With engine cold	37 ÷ 46 (3.8 ÷ 4.7)		
	With engine hot	29 ÷ 35 (3 ÷ 3.6)		
Minimum engine oil pressure sensor		33 ÷ 41 (3.4 ÷ 4.2)		
Cylinder head to cylinder block fixing bolts (1)		81 ÷ 87 (8.3 ÷ 8.9)		
Camshaft housing to cylinder head retaining bolts		19 ÷ 24 (1.9 ÷ 2.4)		
Water inlet retaining bolts		19 ÷ 24 (1.9 ÷ 2.4)		
Oil (petrol) pump fixing bolts (nuts) for rear engine cover mounting		19 ÷ 24 (1.9 ÷ 2.4)		

(1) If a torque wrench is used with extension arm N° 1.822.010.000 (A.5.0198), positioned as shown in the illustration, the torque value becomes:

- with a 300 mm arm torque wrench: 57 ÷ 62 Nm (5.8 ÷ 6.3 Kgm)
- with a 400 mm arm torque wrench: 62 ÷ 67 Nm (6.3 ÷ 6.8 Kgm)

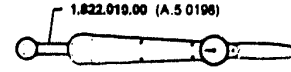

PB125A101

(CONTINUED)

TORQUE LEVELS (Continued)

Unit of measurement Nm (Kgm)

DETAILS	ENGINES		
	30743	30732	30734
Carburetor nuts	19 ÷ 24 (1.9 ÷ 2.4)		
Oil pump body to oil pump mounting attaching bolts	8 ÷ 10 (0.8 ÷ 1)		
Water pump to cylinder block fixing bolts	19 ÷ 24 (1.9 ÷ 2.4)		
Water sender on fuel intake	33 ÷ 41 (3.4 ÷ 4.2)		
Intake manifold nuts	19 ÷ 24 (1.9 ÷ 2.4)		
Right cylinder head thermal contact	33 ÷ 41 (3.4 ÷ 4.2)		
Spark plug torques	25 ÷ 34 (2.5 ÷ 3.5)		

SPECIAL TOOLS

1.820.012.000 (A.2.0195)	Base for cylinder head stand	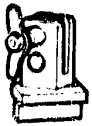 PA136A101
1.820.016.000 (A.2.0226)	Bracket for cylinder head stand	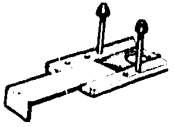 PA136A102
1.821.001.000 (A.3.0103/0010)	Valve extraction and insertion tool	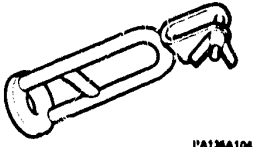 PA136A104
1.821.053.000 (A.3.0311)	Valve guide extractor	 PA136A103

⇩

1.821.054.000 (A.3.0312)	Intake valve guide insertion tool	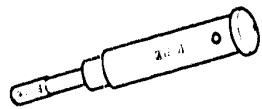 PA121D201
1.821.055.000 (A.3.0314)	Camshaft oil seal ring insertion tool	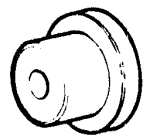 PA121D202
1.821.056.000 (A.3.0321)	Stand for valve extraction and insertion	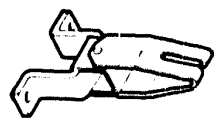 PA136A104
1.821.058.000 (A.3.0324)	Lever for valve extraction and insertion	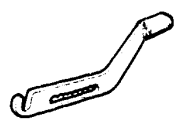 PA136A103

⇩

1.821.063.000 (A.3.0337)	crankshaft rear oil seal ring insertion tool	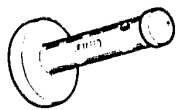 PA137A101
1.821.064.000 (A.3.0338)	crankshaft front oil seal ring insertion tool	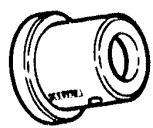 PA137A102
1.821.087.000 (A.3.0402)	Expandable extractor wrench Ø 14 ÷ 20 mm for bush	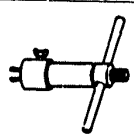 PA121D203
1.821.104.000 (A.3.0450)	crankshaft rear bush insertion tool	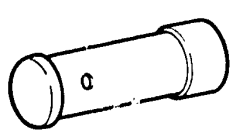 PA121D204

⇩

1.821.110.000 (A.3.0469)	Intake valves rubber guide inserting tool	 PA122D201
1.822.008.000 (A.5.0195)	Toothed wrench for blocking camshafts	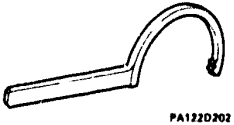 PA122D202
1.822.010.000 (A.5.0198)	17 mm polygonal wrench for cylinder head bolts	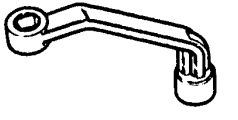 PA122D203
1.828.003.000 (U.6.0007)	Ø 8.013 mm bore grinder for valve guides	 PA122D204

MICROFICHE INDEX

Microfiche 4/15

Group 01 - Engine with electronic injection (LE3 - Jetronic)

ENGINE UNIT REMOVAL ..... 01 - A
ENGINE UNIT REMOVAL (Continued), ENGINE UNIT INSTALLATION ..... 01 - B
ENGINE UNIT INSTALLATION (Continued), ENGINE ASSEMBLY AND DISASSEMBLY FROM THE GEARBOX - DIFFERENTIAL UNIT, ENGINE, ENGINE DISASSEMBLY ..... 01 - C
ENGINE DISASSEMBLY (Continued), CYLINDER HEAD DISASSEMBLY ..... 01 - D
CHECKS AND INSPECTIONS ..... 01 - E
CHECKS AND INSPECTIONS (Continued) ..... 01 - F
CYLINDER HEAD REASSEMBLY, ENGINE REASSEMBLY ..... 01 - G
ENGINE REASSEMBLY (Continued) ..... 01 - H
TCS (For 1.5/1.7 IE) ..... 01 - I
TCS (For 1.5/1.7 IE) (Continued) ..... 01 - L
TCS (For 1.5/1.7 IE) (Continued), SPECIFIC TOOLS (For 1.5/1.7 IE) ..... 01 - M
TCS (For 1.4 IE) ..... 01 - N
TCS (For 1.4 IE) (continued), SPECIFIC TOOLS (For 1.4 IE) ..... 01 - O

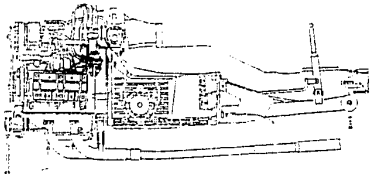

ENGINE WITH ELECTRONIC INJECTION (LE3 - Jetronic)

- ENGINE UNIT REMOVAL

ENGINE UNIT REMOVAL ..... 01 - 1

ENGINE UNIT REMOVAL

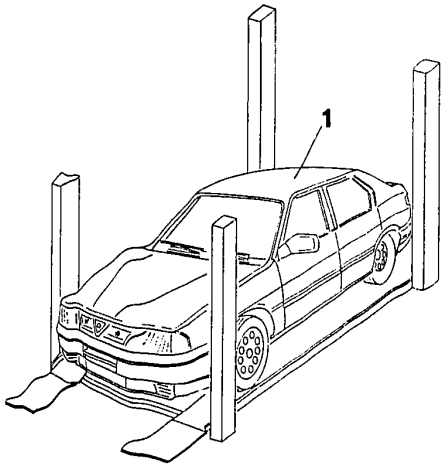

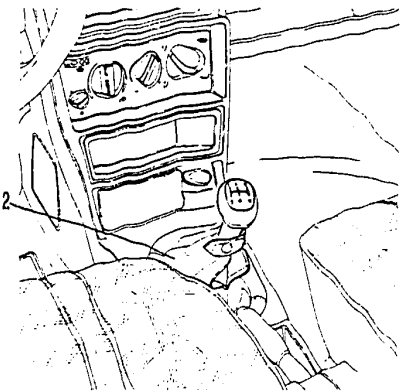

PB0D1E202

1. Place the vehicle on a lift platform, engage the 1st speed and actuate the parking brake.
- Remove the engine bonnet (see **GR. 56**).
- Disconnect the battery negative cable.
2. Withdraw the knob of the gearshift lever and the relevant cover, by acting inside the vehicle.

ENGINE UNIT REMOVAL (continued)

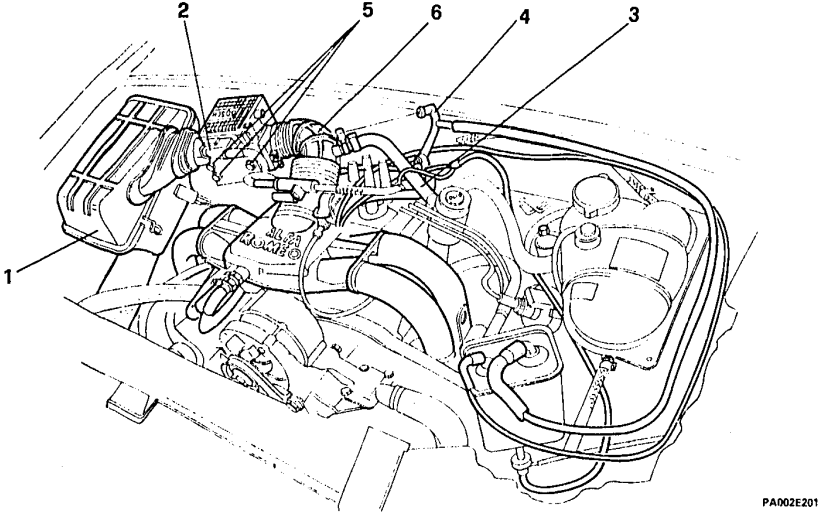

PA002E201

1. Release the air filter cover and remove the filtering element.
2. Unplug the multi-pole connector of the air flow meter.
3. Disconnect the hose from the oil vapour separator.
4. Detach the metal union from the sleeve.
5. Unscrew the three screws fixing the air flow meter to the support.
6. Unloose the the clamps fixing the corrugated sleeve to the throttle valve body

ENGINE UNIT REMOVAL (continued)

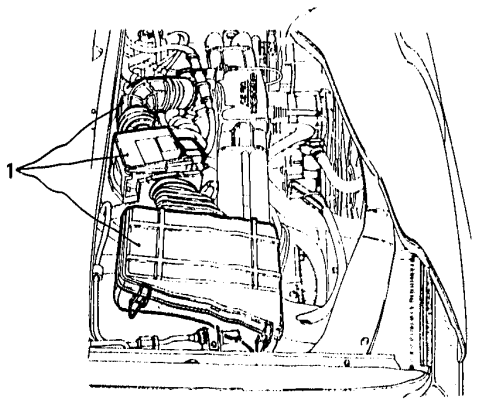

PA003E201

1. Remove the air filter cover complete with air flow meter and corrugated sleeve.
- Unscrew the three nuts and the bolt fixing the support to the body work.

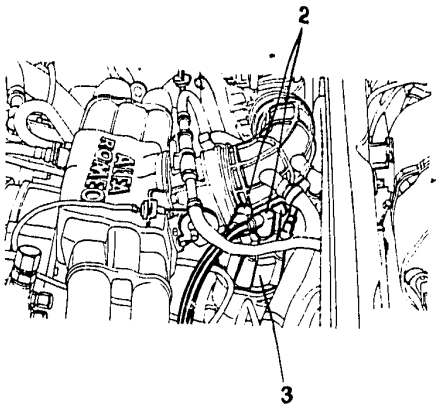

PA001E202

2. Disconnect high voltage cables from spark plugs and coil.
3. Release the distributor cap and remove it from the engine along with its cables.

ENGINE UNIT REMOVAL (continued)

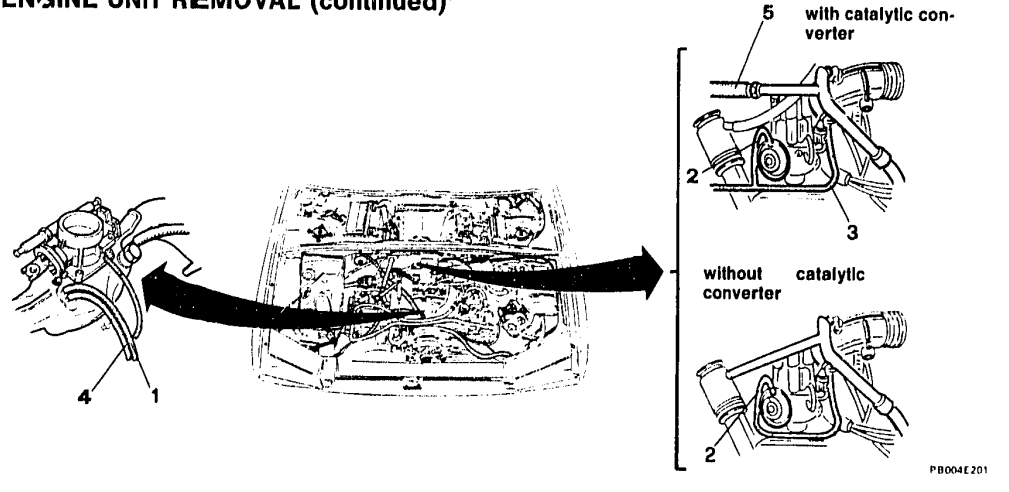

1. Disconnect ther vacuum intake hose for fuel pressure regulator from the fuel supply manifold.
2. On the ignition distributor, disconnect the vacuum intake hose from the pneumatic adjuster for advance pneumatic adjustment.

- Carry out the following steps only for those vehicles equipped with catalytic converter:

3. Disconnect the vacuum intake hose for fuel vapour filter
4. Disconnect the vacuum intake hose from the throttle valve body for the control of the ignition distributor pneumatic advance.
5. Disconnect the air delivery hose to the fuel vapour filter from the metal union.

ENGINE UNIT REMOVAL (continued)

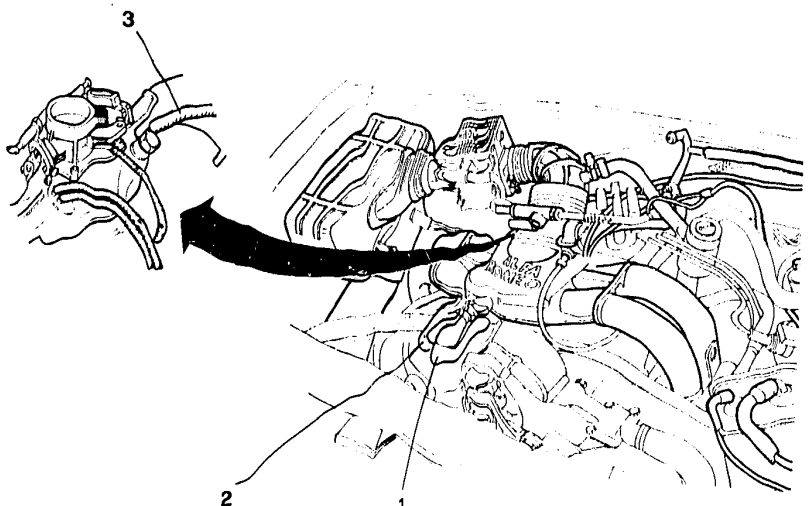

PA00620

1. Disconnect from the union the by-pass hose for idle speed adjustment.
2. Disconnect the additional air intake hose from the fuel supply manifold.
3. Disconnect the power brake vacuum intake hose, by unscrewing the union on the fuel supply manifold.

ENGINE UNIT REMOVAL (continued)

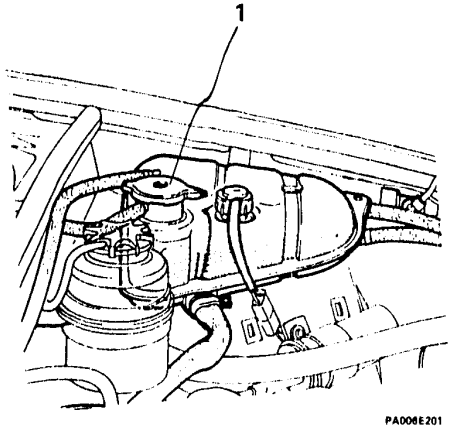

PA006E201

1. Unscrew and remove the expansion tank cap of the cooling cir
- Cuit. Lift the vehicle in order to operate under it and remove the plugs to drain completely the coolant.

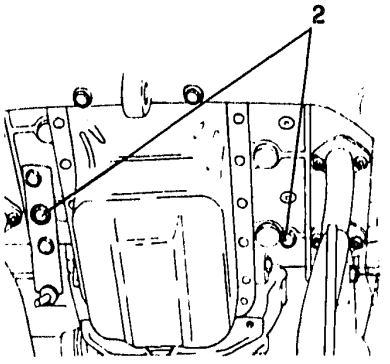

PA006E202

- Refit the plugs and lower the vehicle.

Place a suitable tank under the vehicle in order to collect the coolant.

ENGINE UNIT REMOVAL (continued)

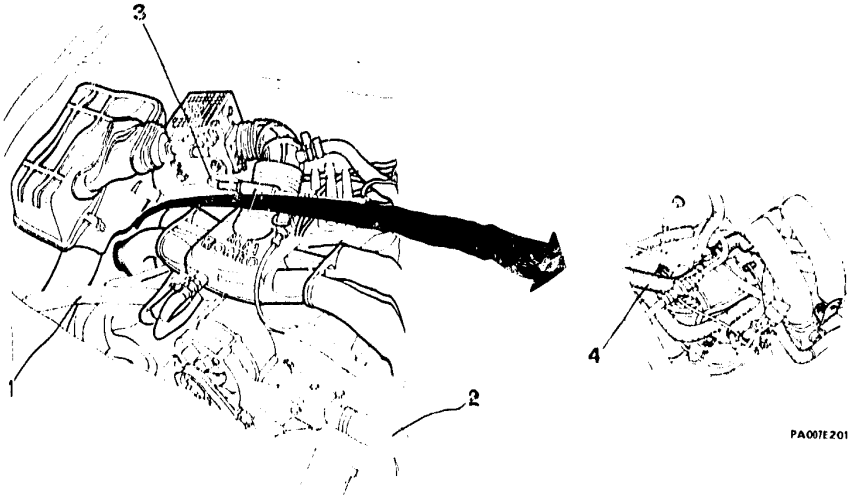

1. Detach the coolant delivery sleeve to the radiator from the radiator and from the thermostat, then remove it.
2. Detach from the pipe union, the coolant return sleeve from the radiator
3. Disconnect the bleeding hoses of the cooling circuit from the throttle valve body.
4. Detach the coolant delivery hose to the radiator from the "T" union on the engine right side.
- Detach the coolant return hose from the radiator from the "T" union on the engine rear side.

ENGINE UNIT REMOVAL (continued)

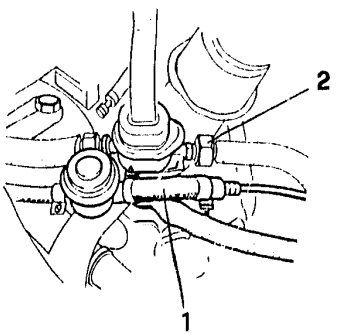

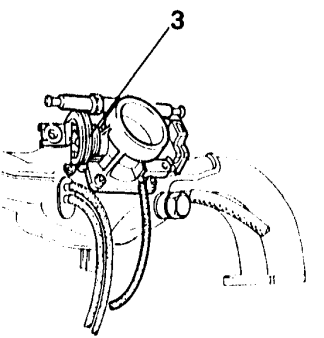

PA008E201

1. Detach the fuel delivery hose from the pulse damper.
2. Detach the fuel overflow return hose from the pressure regulator.
3. Rotate the accelerator lever and release the pawl of the control cable end.
   - Remove the circlip and withdraw the end of the accelerator cable sheath from the bracket.

ENGINE UNIT REMOVAL (continued)

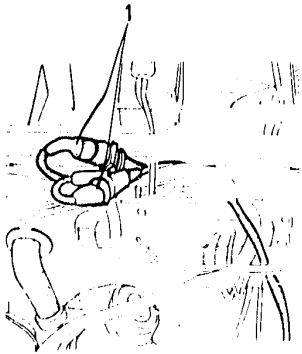

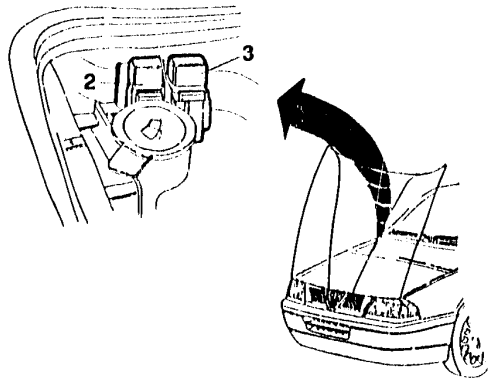

1. Disconnect the two connections of the Lambda probe and release the cables from the clamps (only for version with catalytic converter).
2. Remove the injection relay with its socket.
3. Remove the fuel pump relay with its socket.

- Disconnect the connection between injection/ignition wiring and vehicle wiring, located in the service bay.

ENGINE UNIT REMOVAL (continued)

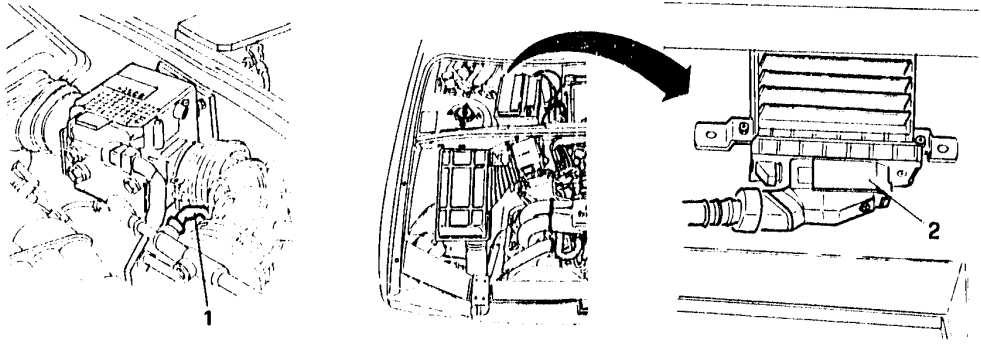

1. Detach the connector from the switch on the throttle body.
- Disconnect injection wiring from battery positive terminal.

2. Disconnect terminal board from ignition ECU.

ENGINE UNIT REMOVAL (continued)

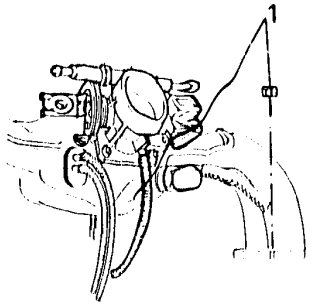

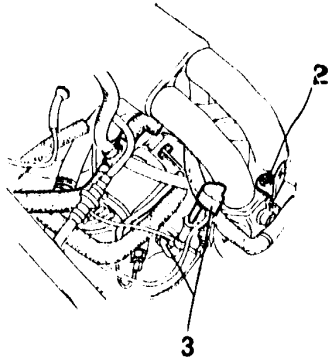

P A010E 201

1. Unscrew the nuts securing the supply manifold and remove the manifold with relative gaskets and throttle body.
- Suitably plug the intake manifolds on the engine.
2. Unscrew the two central nuts fixing the engine lifting brackets.
3. Remove the supporting bracket of the oil dipstick.

ENGINE UNIT REMOVAL (continued)

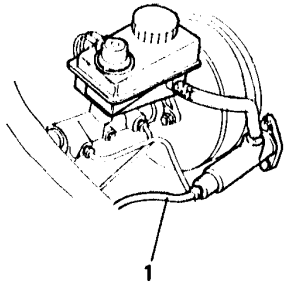

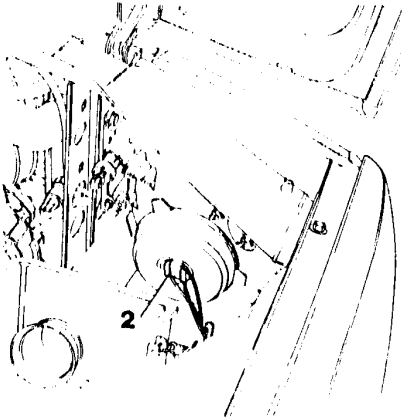

PB012E201

1. Unscrew the union of the clutch master cylinder delivery pipe and slide it out from the service bay metal plate.
2. Disconnect front optical unit supply cables.

- Disconnect foglight cables.
- Disconnect cables from horns.

ENGINE UNIT REMOVAL (continued)

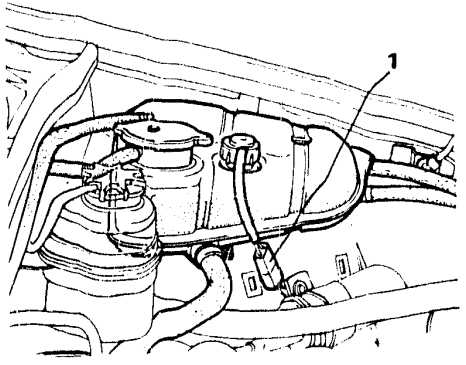

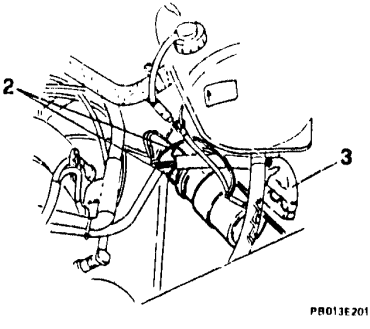

1. Disconnect wire of engine coolant min. level sensor.
2. Disconnect LT cables on coil.
3. Disconnect connector from power module on coil.
- Disconnect cables from electric fan enabling thermal contact located on left side of radiator.

ENGINE UNIT REMOVAL (continued)

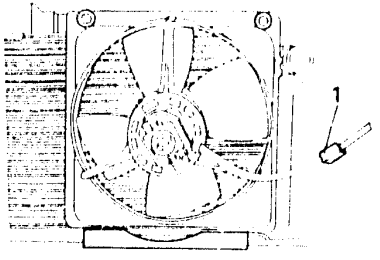

PA013E201

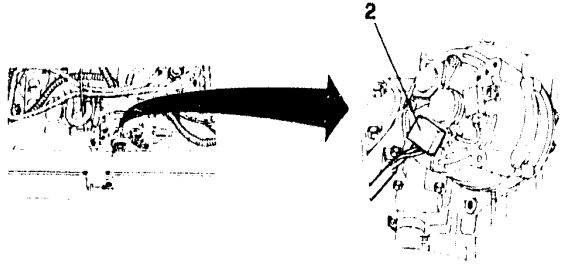

PA013E202

1. Disconnect the electric fan supply cables from the junction.

2. Disconnect the supply cables and alternator warning light by unplugging the pressure-mounted connector on the alternator.

ENGINE UNIT REMOVAL (continued)

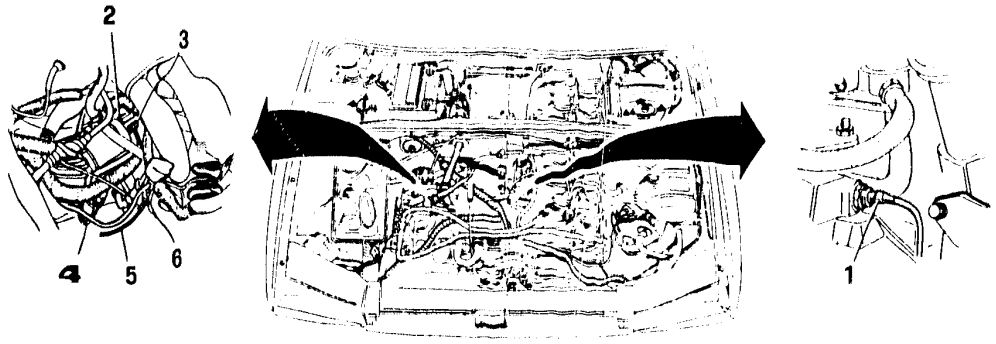

PA014E201

1. Disconnect the cable of the engine coolant temperature indicator.
2. Disconnect the cranking motor energizing cable from the free junction.
3. Disconnect the cranking motor supply cables from the relevant pin.
4. Disconnect the cable of the engine oil minimum pressure warning light from the oil minimum pressure pressure switch.
5. Disconnect the cable of the engine maximum temperature warning light from the thermal switch.
6. Disconnect the cable of the engine oil minimum level sensor from the oil dipstick.

ENGINE UNIT REMOVAL (continued)

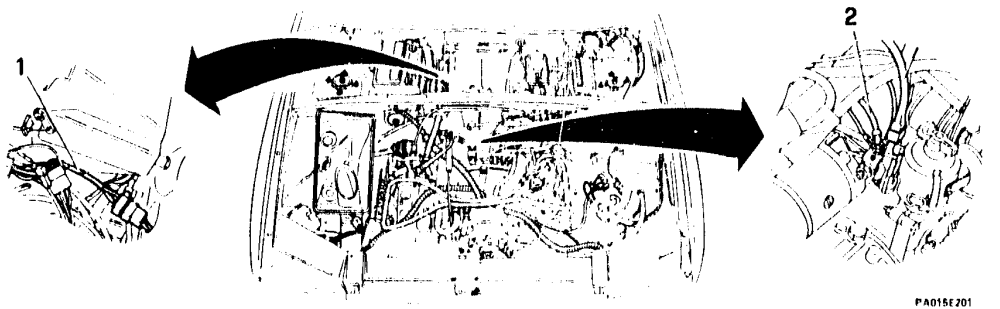

1. Detach the connection of the odometer cable placed in the service compartment.
2. Disconnect the earthing cables by unscrewing the nuts on the engine block - rear side-.

- Release the wiring from the cable clamps and set them apart not to hamper the engine removal.

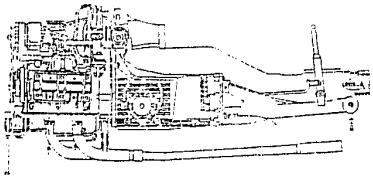

ENGINE WITH ELECTRONIC INJECTION (LE3 - Jetronic)

- ENGINE UNIT REMOVAL (continued)
- ENGINE UNIT INSTALLATION

ENGINE UNIT REMOVAL ..... 01 - 17
ENGINE UNIT INSTALLATION ..... 01 - 26

ENGINE UNIT REMOVAL (continued)

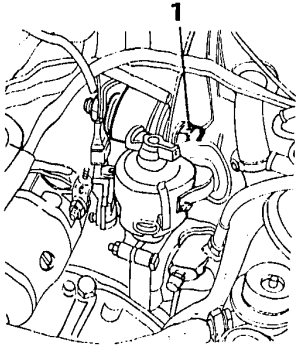

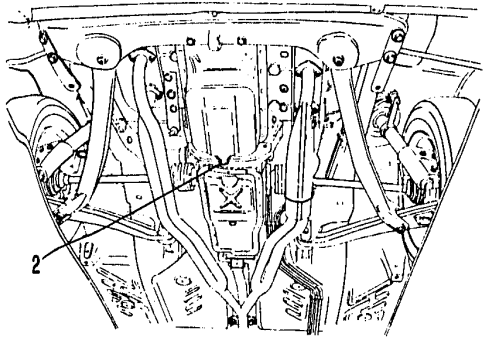

PA016E201

1. Unloose the bolt fixing the engine central support to the body work, without removing it.
- Lift the vehicle after placing it on a lift platform.

2. Drain the engine oil by unscrewing the oil sump plug.

ENGINE UNIT REMOVAL (continued)

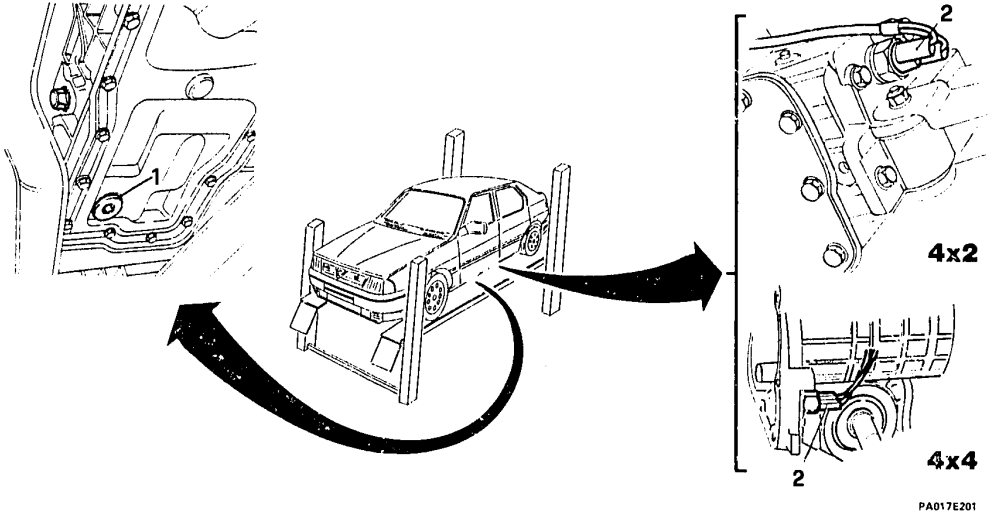

PA017E201

1. Drain the gearbox-differential unit oil by unscrewing the draining plug.
2. Disconnect the reverse light cable from the switch.

ENGINE UNIT REMOVAL (continued)

EXHAUST PIPE REMOVAL (VERSIONS WITHOUT CATALYTIC CONVERTER)

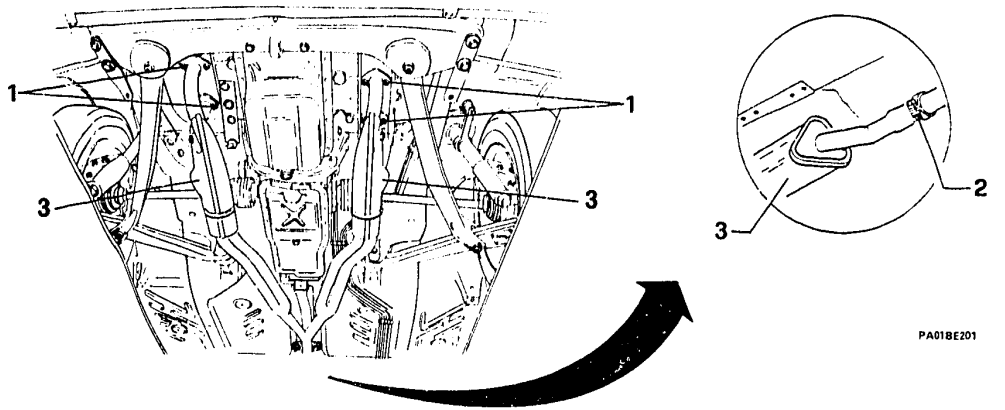

1. Unscrew the nuts securing the manifolds to the cylinder heads.
2. Unloose the clamp joining the central part to the rear end.
3. Remove the exhaust manifolds and the centre part of the exhaust pipe recovering all the gaskets.

ENGINE UNIT REMOVAL (continued)

EXHAUST PIPE REMOVAL (VERSIONS WITH CATALYTIC CONVERTER)

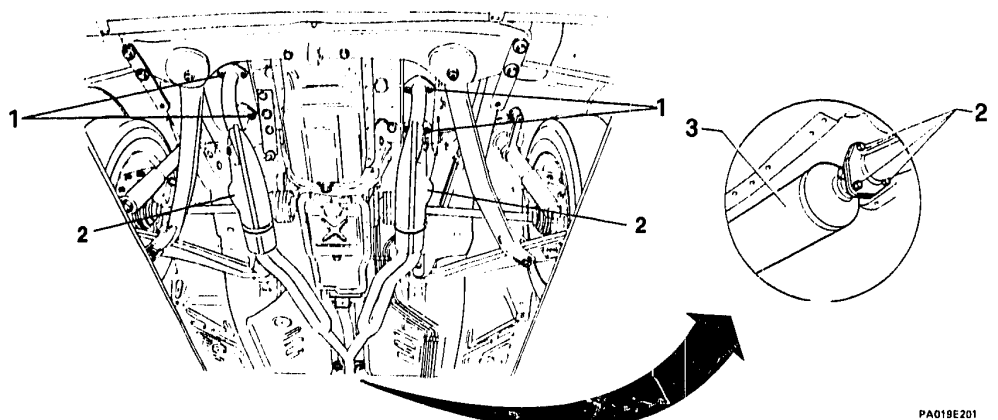

1. Unscrew the nuts securing the manifolds to the cylinder heads.
2. Unscrew the three bolts fixing the front exhaust manifold to the catalytic muffler; remove the exhaust manifolds recovering all the gaskets and withdrawing from the lower side the previously disconnected wiring of the Lambda sensor.
3. Loosen the clamp securing the catalytic exhaust to the terminal and remove it.

ENGINE UNIT REMOVAL (continued)

PROPELLER SHAFT (Specific for 4x4 versions)

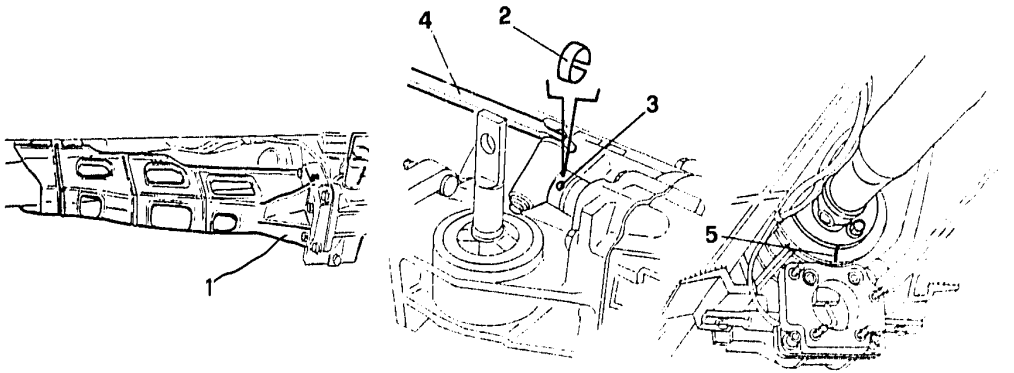

PA020E201

1. Remove the gearshift control lever support.
2. Remove the safety clamp.
3. Remove the locking pin.
4. Remove the gearshift control lever.
5. Engrave a reference mark on the propeller shaft front coupling flange, in order to ease assembly operations.

ENGINE UNIT REMOVAL (continued)

PROPELLER SHAFT (Specific for 4x4 versions)

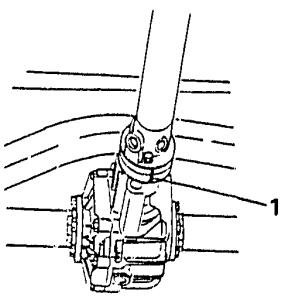

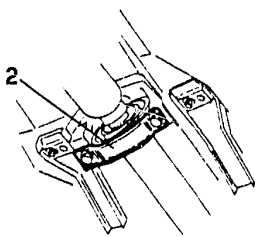

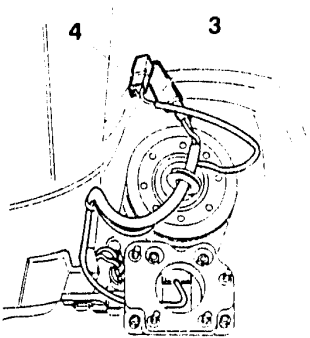

PA021E201

1. Engrave a reference mark on the propeller shaft rear coupling flange, in order to ease assembly operations.
2. Unscrew the central support fixing screws.
- Unscrew the fixing screws of front and rear flanges and remove the propeller shaft.
3. Disconnect the wiring of the electromagnetic coupling.
4. Disconnect the wiring of the meshing control sensor.



ENGINE UNIT REMOVAL (continued)

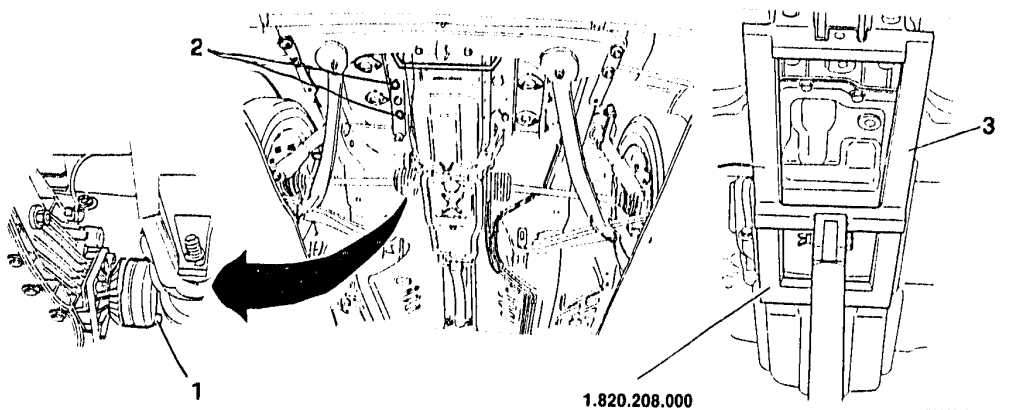

1. Disjoin axle shafts from gearbox shaft.
- Disengage the axle-shafts.
2. Unscrew the two screws securing the supporting bracket of the engine stabilizer bar.
3. Place a column-type jack provided with support N°1.820.208.000 under the engine unit.

⇩

ENGINE UNIT REMOVAL (continued)

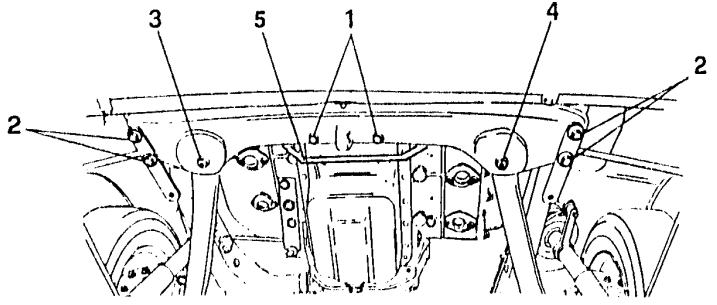

PR024E201

1. Unloose and remove the two screws fixing the engine front support to the cross member.
2. Unloose and remove the two screws securing the engine front support to the cross member.
3. Unloose the bolt joining the front cross member to the right rebound limit stop.
4. Unscrew and remove the bolt joining the front cross member to the left rebound limit stop.
   - Detach the rebound limit stop from the cross member.
5. Unscrew the two bolts fixing the stabilizer bar to the suspension left rebound limit stop.

ENGINE UNIT REMOVAL (continued)

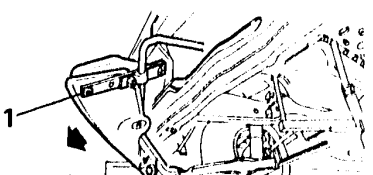

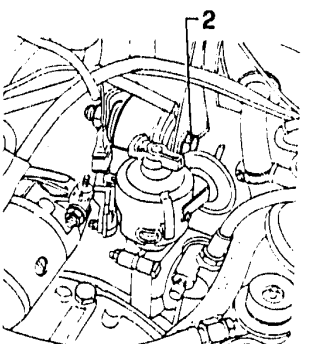

PA024E201

1. Rotate the front cross member complete with stabilizer bar as shown in Figure.
- Unloose and remove the two screws fixing the engine unit rear support to the body work.

2. Remove the bolt, previously unloosen, which fixes the engine central support to the body work.
- Lower the column-type jack and remove the engine unit from the engine compartment lower side.

ENGINE UNIT INSTALLATION

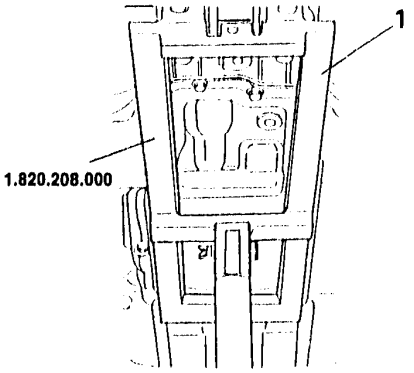

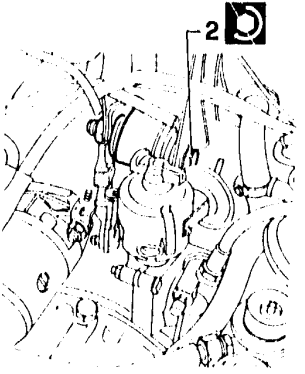

PA025E201

The engine unit installation must be carried out so that the flexible coupling of the gearbox rear support and the frontspring mount of the engine do not result to be preloaded inheight and longitudinally respectively.

1. Lift the engine unit by means of the column-type jack used during removal operations, till positioning the central support axis half-way the slot machined on the body work.
2. Fully tighten the bolt securing the central support.

ENGINE UNIT INSTALLATION (continued)

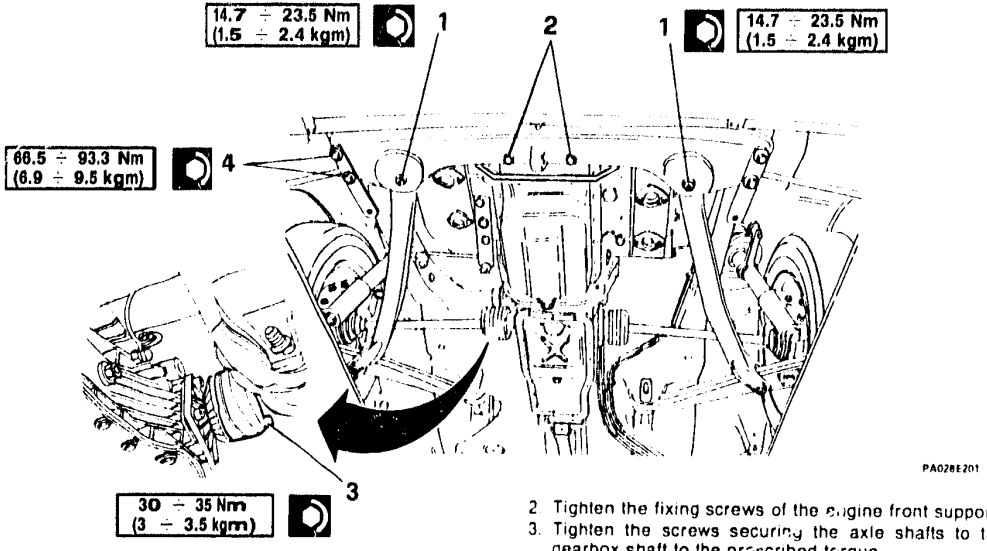

- Rotate the front cross member complete with stabilizer bar to the assembly position.

1. Secure the stabilizer bar to the rebound limit stop by tightening the bolt to the prescribed torque.
2. Tighten the fixing screws of the engine front support.
3. Tighten the screws securing the axle shafts to the gearbox shaft to the prescribed torque.
4. Tighten the fixing screws of the engine front cross member and the stabilizer bar bracket to the body work to the prescribed torque.

ENGINE UNIT INSTALLATION (continued)

SPECIFIC FOR 4x2 VERSIONS

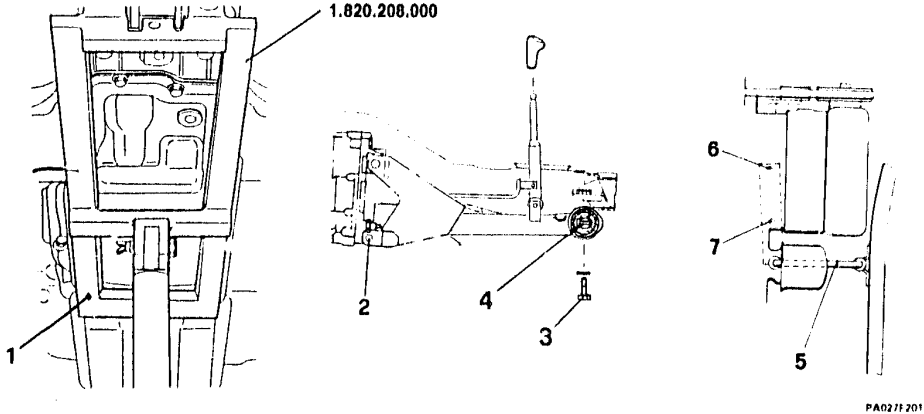

1. Remove the column-type jack previously placed under the engine unit.
2. Unloose the lower fixing bolt of the gearbox rear support.
3. Insert the pin into the flexible coupling of the rear support.
4. Place the flexible coupling on the relevant fixing points on the body work and tighten the fixing screws.
   - Tighten the lower fixing bolt of the gearbox rear support.
5. Insert the tie-rod into the rubber bushing on the right longitudinal member.
6. Tighten the rear screw.
7. Tighten the front screw.

ENGINE UNIT INSTALLATION (continued)

SPECIFIC FOR 4x4 VERSIONS

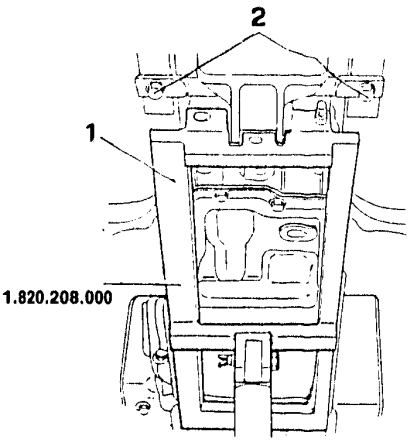

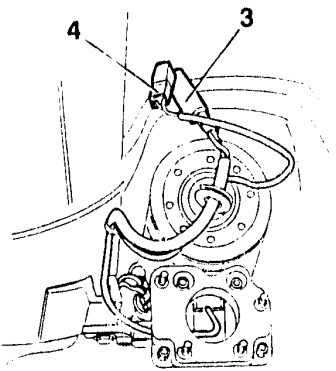

PA026E201

1. Remove the column-type jack previously placed under the engine unit.
2. Place the rear spring mount on its fixing points to the body work, then tighten the fixing screws.
3. Restore the wiring connections of the electromagnetic coupling.
4. Restore the wiring connections of the meshing control sensor.

ENGINE UNIT INSTALLATION

SPECIFIC FOR 4x4 VERSIONS (continued)

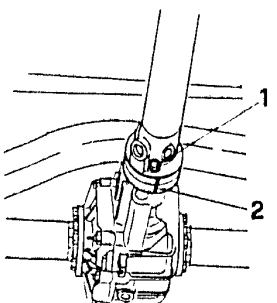

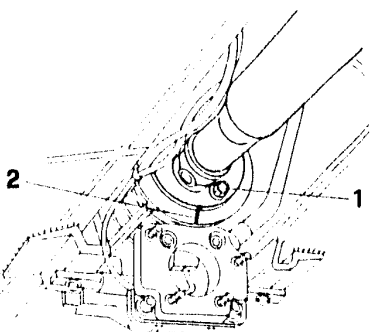

1. Install the propeller shaft by means of the fixing screws to the front and rear flanges.

2. When installing the propeller shaft, match the reference marks, applied when disassembling, on rear and front flanges



ENGINE UNIT INSTALLATION

SPECIFIC FOR 4x4 VERSIONS (continued)

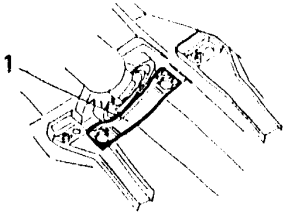

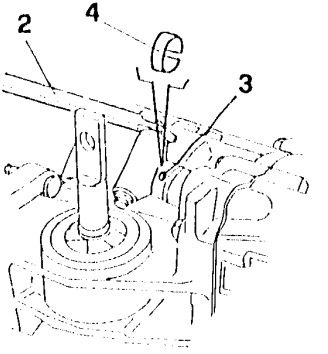

1. Refit the drive shaft central support and secure it with the relative screws.
2. Position the gear control lever.
3. Refit the attaching pin.
4. Install the flexible safety band.

ENGINE UNIT INSTALLATION

SPECIFIC FOR 4x4 VERSIONS (continued)

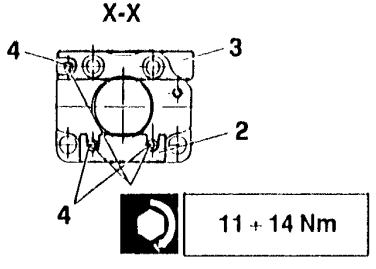

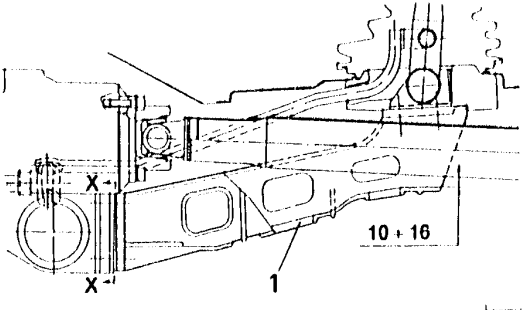

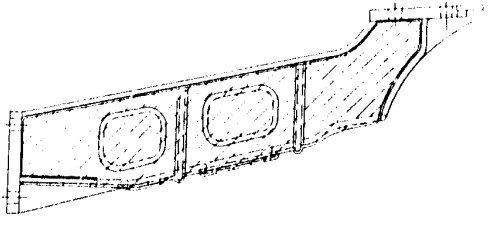

1. Remove the gear lever support (for 4x4 versions).
- When refitting the gear control lever it is necessary to check that it is the correct distance away from the drive shaft.

If it is not it is possible to operate as follows:

- Raise the vehicle.
- Check the distance between the support and the drive shaft.
- If the values is above 16 mm it will be necessary to insert one or more shims (2) under the lower nuts.
- If the value is below 10 mm it will be necessary to insert one or more shims (3) under the upper nut.
- Tighten the nuts (4) to the correct torque.

N.B. Each 0.5 mm shim will vary the value by ~ 3.5 mm.

NOTE: Starting from chassis number 5822286, an off-loaded gear lever support has been fitted and the distance from the drive shaft need not be checked.

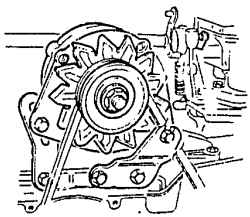

ENGINE WITH ELECTRONIC INJECTION (LE3 - Jetronic)

- ENGINE UNIT INSTALLATION (continued)
- ENGINE ASSEMBLY AND DISASSEMBLY FROM THE GEARBOX-DIFFERENTIAL UNIT
- ENGINE
- ENGINE DISASSEMBLY

ENGINE UNIT INSTALLATION ..... 01 - 33
CYLINDER COMPRESSION TEST ..... 01 - 34
ENGINE ASSEMBLY AND DISASSEMBLY FROM THE GEARBOX-DIFFERENTIAL UNIT ..... 01 - 35
ENGINE
EXTERNAL PARTS - ASSEMBLY ..... 01 - 36
INTERNAL PARTS - ASSEMBLY ..... 01 - 37
ENGINE DISASSEMBLY
INJECTION WIRING ..... 01 - 39
FUEL DISTRIBUTOR MANIFOLD ..... 01 - 40
ALTERNATOR ..... 01 - 42
ENGINE COOLING CIRCUIT SLEEVES AND PIPE UNION ..... 01 - 43
THERMOSTAT AND INTAKE MANIFOLD ..... 01 - 44
TIMING BELTS ..... 01 - 45
PULLEYS AND TIGHTENING PULLEYS ..... 01 - 46
WATER PUMP ..... 01 - 47
ENGINE FRONT SUPPORT ..... 01 - 48

ENGINE UNIT INSTALLATION (continued)

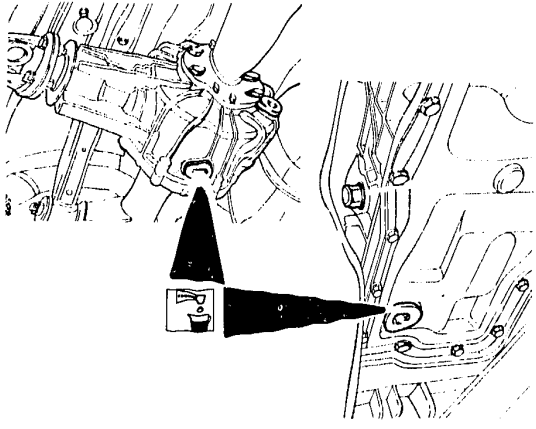

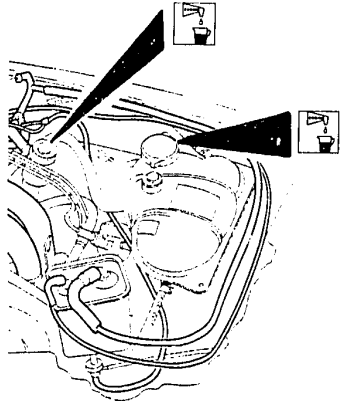

PA031E201

- Complete the engine unit installation by reversing the removal operatrions paying a special attention to what follows.
- Refill the engine unit with the prescribed oils and fluids(see **GR. 00**).
- Carry out the accelerator control cable adjustment (see **GR.04**).
- Restore all the connections of the hydraulic circuit (see **GR. 22**).
- Start the engine and, after reaching the operating temperature, check its correct operation at idle speed, the correct timing adjustment and the exhaust CO percentage.
  For any tuning operation of the engine, see **GR. 00**.

ENGINE UNIT INSTALLATION (continued)

CYLINDER COMPRESSION TEST

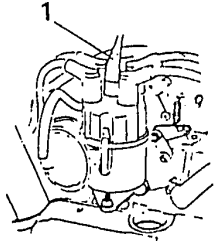

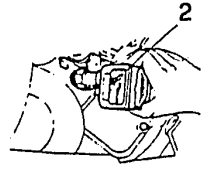

- After refitting test the cylinder pressure as follows:
- Run the engine to normal operating temperature.
- Remove the spark plugs.

1. Disconnect the high voltage cable.
2. Insert the pressure test instrument in one of the spark plug wells.

- Rotate the engine a few times using the starter motor, keep the accelerator fully depressed so that the throttle valve of the carburettor is fully open.
- Check that the pressure is above the maximum limit.

Ensure that there is no leakage from the pressure gauge connection.

Minimum pressure	1030 kPa (10.3 bar; 10.5 kg/cm^2)
Maximum difference in pressure between the cylinders	98 kPa (0.98 bar; 1 kg/cm^2)

- Repeat the test for the remaining cylinders (ensuring that the test apparatus is reset to zero each time) and then compare the values and check that the difference in maximum pressure between the various cylinders does not exceed the permitted value.
- If the values are not as specified check for leakage in the sealing of the valves or between the cylinder liners and pistons.

ENGINE ASSEMBLY AND DISASSEMBLY FROM THE GEARBOX-DIFFERENTIAL UNIT

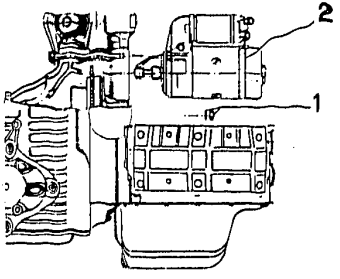

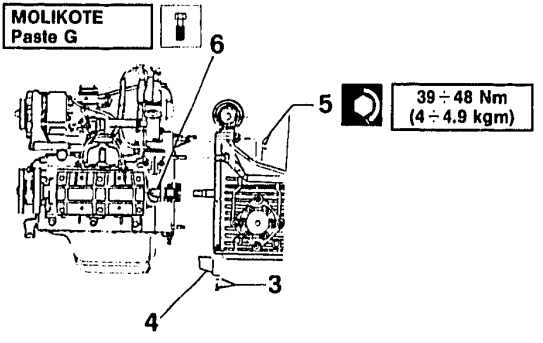

- Place the engine unit on a rotary stand equipped with a suitable supporting tool.

1. Unloose and remove the nuts with the relevant washers from the fixing screws of the cranking motor.
2. Remove the cranking motor from the engine.
3. Unscrew the screws fixing the protection plate to the engine rear cover and to the gearbox.
4. Remove the flywheel protection case.
5. Unloose and remove the remaining nuts and washers and complete the disassembling operations on the two units.

Withdraw the thrust bearing from its support on the gearbox in order to avoid any damage.

6. When reassembling, grease the seat of the drive shaft.

ENGINE

EXTERNAL PARTS - ASSEMBLY

1 Electroinjectors
2 Fuel distribution manifold
3 Brackets for raising engine
4 Intake manifold
5 Fuel dashpot
6 Fuel pressure regulator
7 Supply manifolds
8 Auxiliary air device
9 Gasket
10 Coolant temperature sender (for indicator)
11 Gasket
12 Coolant temperature sender (for ECU)
13 Oil dipstick
14 Min. oil pressure switch
15 Ignition distributor
16 Pipe union
17 Coolant pump
18 Timing belt front guards
19 Water pump pulley
20 Water pump - alternator belt
21 Alternator
22 Thermostat
23 Oil filter
24 Max. engine temperature thermal contact
25 Thermal contact (for ignition ECU)

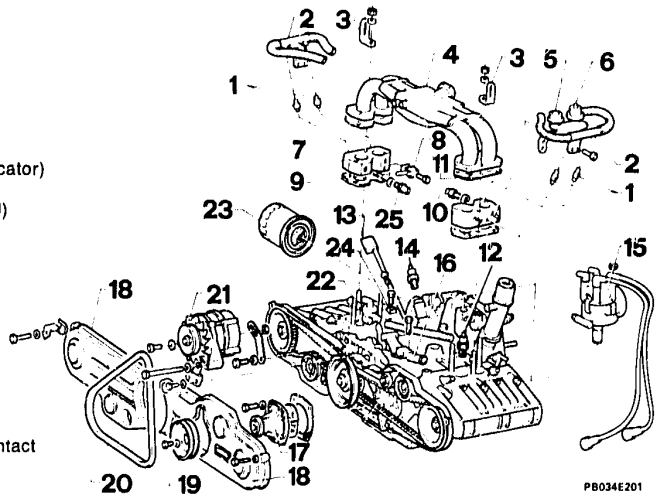

INTERNAL PARTS - ASSEMBLY

1 Tightening pulley
2 Timing belt
3 Right timing belt
4 Timing belt rear carter
5 Engine front cover
6 Crankshaft sealing ring
7 Engine block
8 Spacer
9 Timing pulley
10 Water pump - alternator pulley
11 Spacer
12 Washer
13 Valve
14 Cylinder head
15 Valve guide
16 Lower cap
17 Washer
18 Oil seal
19 Springs
20 Cap
21 Cotters
22 Tappet
23 Timing camshaft bearing
24 Timing camshaft
25 Cover
26 Gasket
27 Oil seal ring
28 Timing belt carters

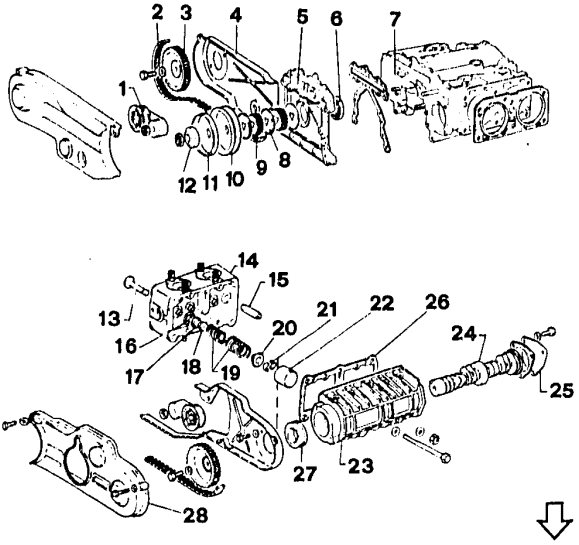

INTERNAL PARTS - ASSEMBLY (continued)

1 Main half-bearings
2 Key
3 Half thrust-rings
4 Oil pump gear
5 Bushing
6 Oil seal ring
7 Rear cover
8 Oil vapour separator/filler neck
9 Flywheel
10 Washer
11 Spring ring
12 Piston pin
13 Piston rings
14 Oil scraper ring
15 Oil pump
16 Oil sump
17 Oil drain plug
18 Main bearing cap
19 Piston
20 Connecting rod
21 Connecting rod half-bearings
22 Connecting rod cap
23 Crankshaft

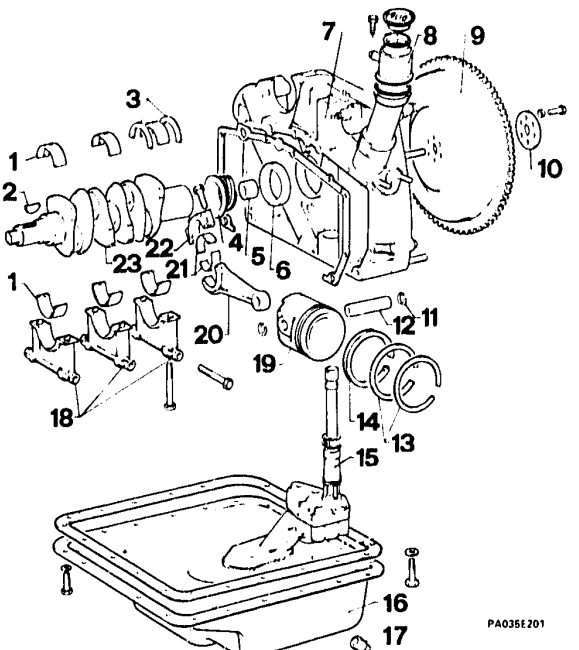

PA035E201

ENGINE DISASSEMBLY
INJECTION WIRING

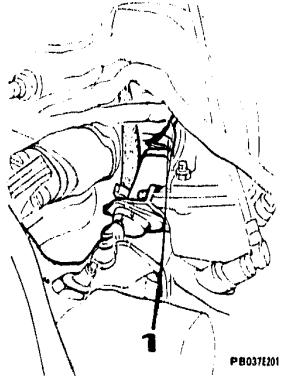

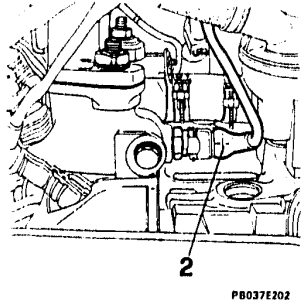

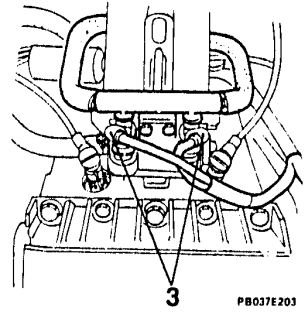

- Disconnect connector from thermal contact on RH manifold (for ignition ECU).
1. Disconnect connectors from auxiliary air device.
2. Disconnect engine coolant temperature sensor connectors, located on LH manifold.
- Disconnect connector from ignition distributor.
3. Disconnect connectors from electroinjectors.
- Release the wires from the wire-grip clamps and remove them from the engine.

ENGINE DISASSEMBLY (continued)

FUEL DISTHIBUTOR MANIFOLD

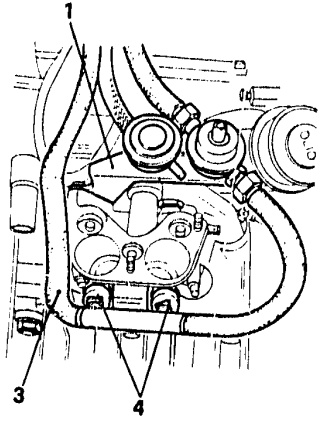

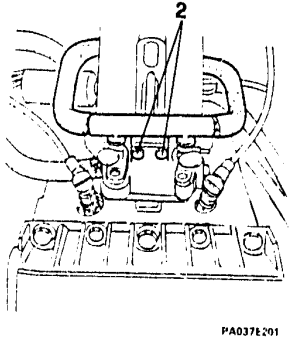

1. Unscrew the supporting bracket fixing screws of the pulse damper and the pressure regulator.
2. Unscrew the supporting bracket fixing screws of the fuel distributor manifold.
3. Remove the fuel distributor manifold by disconnecting it from the four injectors.
4. Remove the four injectors by withdrawing them from the intake manifolds.

ENGINE DISASSEMBLY (Continued)

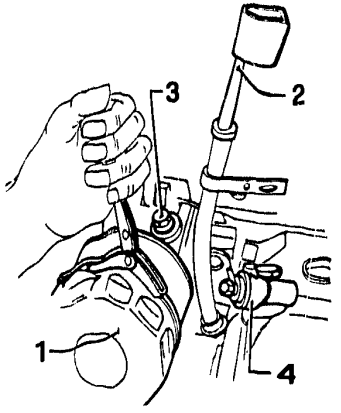

PB039E201

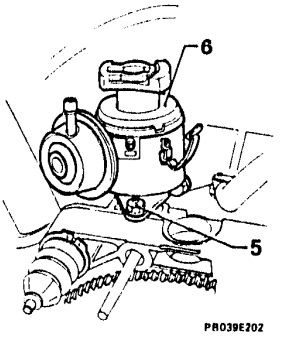

PB039E202

1. Remove oil filter.
2. Remove engine oil dipstick.
3. Remove pressure switch from engine block.
4. Remove max. engine temperature thermal contact.
- Unscrew and remove spark plugs from cylinder heads.
5. Slacken off the nut fastening distributor.
6. Take out distributor from rear cover.

ENGINE DISASSEMBLY (continued)
ALTERNATOR

1. Slacken the alternator fixing bolts.
2. Remove the driving belt.
   - Completely unscrew the fixing bolts.
3. Remove the alternator.
4. Remove the bracket fixing screws.
5. Remove the brackets.

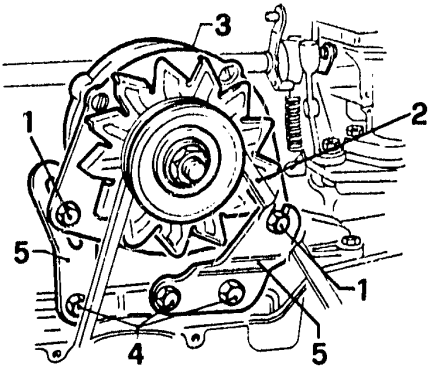

PA039E201

ENGINE DISASSEMBLY (Continued)

ENGINE COOLING CIRCUIT SLEEVES AND PIPE UNION

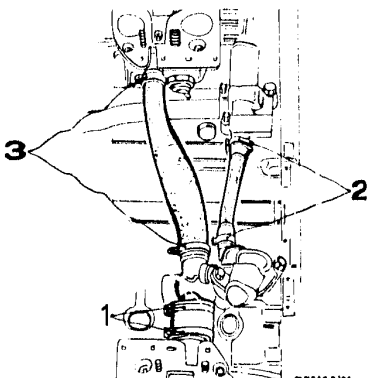

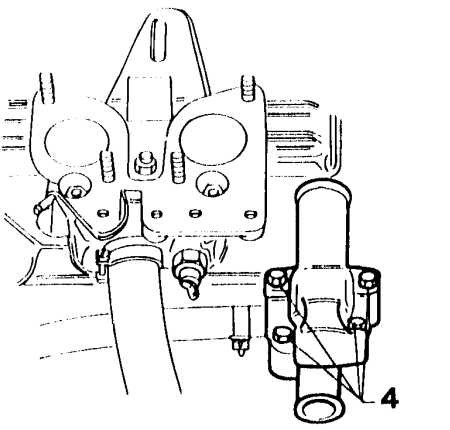

1. Loosen off the clamps of the sleeve connecting the RH manifold to the thermostat.
2. Loosen off the clamps fastening the sleeve connecting the thermostat and the pipe union; then remove it.
3. Remove the clamps fastening the sleeve connecting the thermostat and LH manifold; then remove it.
4. Unscrew and remove the screws fastening the pipe union on the engine block and remove it.

ENGINE DISASSEMBLY (Continued)

THERMOSTAT AND INTAKE MANIFOLDS

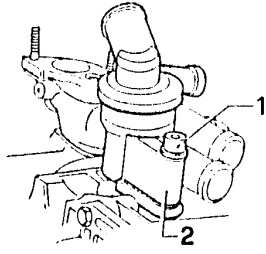

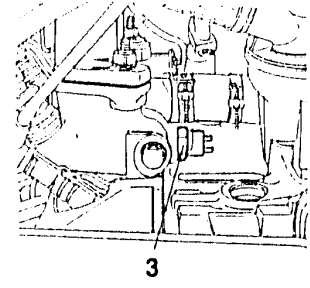

1. Unscrew the screw fastening the thermostat to the engine block.
2. Remove the thermostat.

- Unscrew the three nuts securing each intake manifold and remove them from the cylinder heads along with their gaskets.

3. Remove engine coolant temperature sensor from LH manifold.

- If necessary, working at the bench, unscrew the two securing screws and remove the auxiliary air device from the RH manifold.

ENGINE DISASSEMBLY (continued)

TIMING BELTS

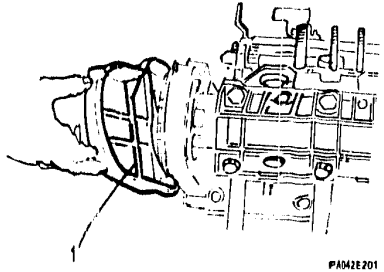

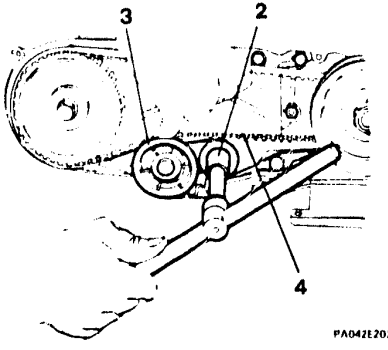

1. Slacken the fixing screws and remove the two protecting carters of the timing belts.
2. Slacken the fixing nut of the right tightening pulley.
3. Press on the tightening pulley in order to decrease belt tension.
   - Move the tightening pulley and block its fixing nut so that the belt will result slackened.
4. Remove the belt from the timing camshaft pulley and then from the crankshaft pulley.

- Repeat the above-mentioned procedure for the left cylinder head.

ENGINE DISASSEMBLY (continued)

PULLEYS AND TIGHTENING PULLEYS

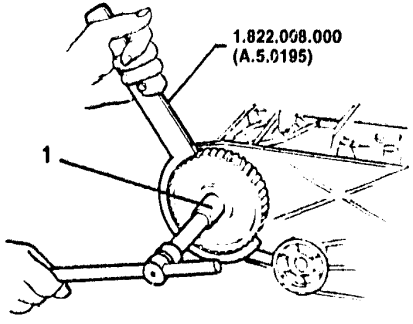

PA043E201

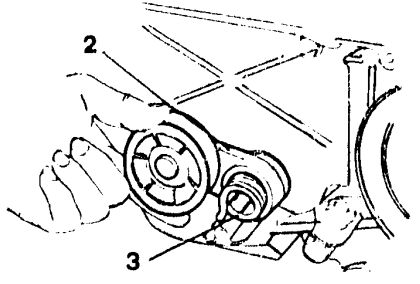

PA043E202

1. Unscrew the pulley fixing screws on the timing camshafts, while blocking pulley rotation by means of the toothed wrench N° 1.822.008.000 (A.5.0195), the remove the pulleys.
2. Unscrew the fixing nut and remove the right tightening pulley.
3. Remove the spring.

ENGINE DISASSEMBLY (Continued)

WATER PUMP

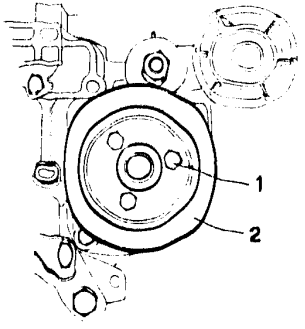

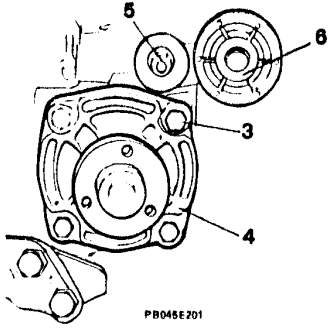

- Remove the timing belt rear guards.
1. Unscrew screws with washers securing the pulley to the water pump hub.
2. Remove the pump drive pulley.
3. Unscrew the screws securing the water pump to the engine block.
4. Remove the pump and gasket.
5. Unscrew nut of LH guide pulley.
6. Remove LH guide pulley together with spring.

ENGINE DISASSEMBLY (continued)

ENGINE FRONT SUPPORT

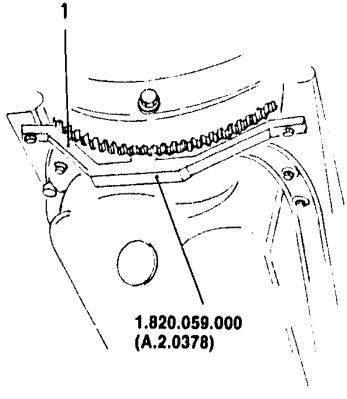

PA048E201

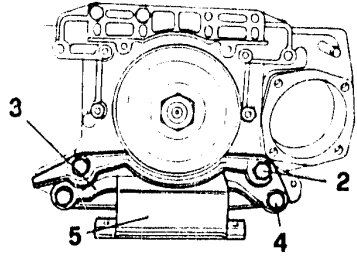

PA048E202

1. Block the flywheel by means of tool N° 1.820.059.000 (A.2.0378).
2. Unscrew the guard screws.
3. Remove the guard.
4. Unscrew the support screws.
5. Remove the engine front support.

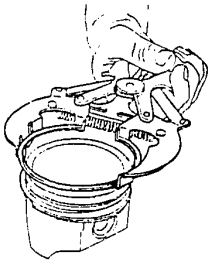

ENGINE WITH ELECTRONIC INJECTION (LE3 - Jetronic)

- ENGINE DISASSEMBLY (continued)
- CYLINDER HEAD DISASSEMBLY

ENGINE DISASSEMBLY

CRANKSHAFT PULLEYS ..... 01 - 49
CYLINDER HEADS ..... 01 - 50
OIL PUMP AND SUMP ..... 01 - 51
CYLINDER BLOCK FRONT COVER ..... 01 - 52
PISTONS AND CONNECTING RODS ..... 01 - 53
FLYWHEEL AND CYLINDER BLOCK REAR COVER ..... 01 - 56
CRANKSHAFT ..... 01 - 57

CYLINDER HEAD DISASSEMBLY ..... 01 - 59

ENGINE DISASSEMBLY (continued)
CRANKSHAFT PULLEYS

1. Unscrew the pulley fixing nut.
2. Remove the washer.
3. Remove the spacer.
4. Remove the crankshaft pulley.
5. Remove the timing drive gear of the right cylinder head.
6. Remove the spacer.
7. Remove the timing drive gear of the left cylinder head.
8. Remove the belt guide washer.

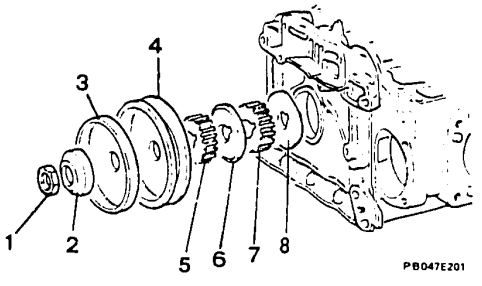

PB047E201

PA046E201

ENGINE DISASSEMBLY (continued)

CYLINDER HEADS

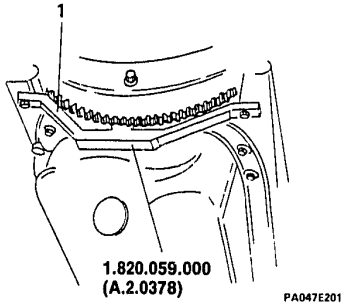

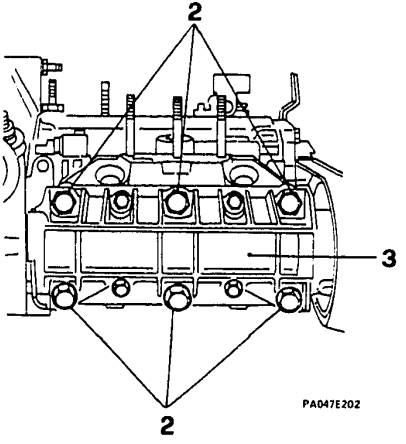

1. Remove the previously mounted tool for flywheel locking.
2. Unscrew the six screws fixing the cylinder heads to the cylinder block.
3. Remove the cylinder heads complete with timing camshaft bearings and the cylinder block gaskets.

ENGINE DISASSEMBLY (continued)

OIL PUMP AND SUMP

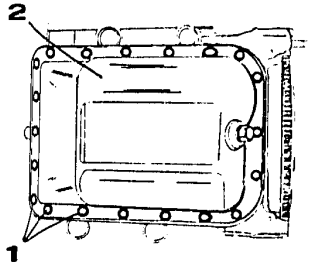

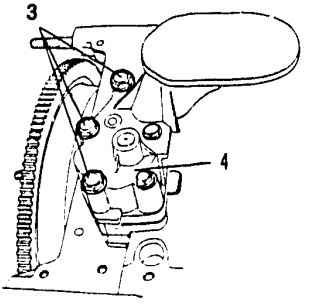

A048E201

1. Remove screws and washers fixing the oil sump to the cylinder block.
2. Remove the oil sump complete with its gasket.
- Should it be necessary, remove any trace of sealant from the oil sump and the cylinder block.
3. Remove screws and washers fixing the oil pump to the cylinder block rear cover.
4. Remove the pump from the engine block by withdrawing it from above.

This document was downloaded free from

www.iw1axr.eu/carmanual.htm

Questo documento è stato scaricato gratuitamente da

www.iw1axr.eu/auto.htm

ENGINE DISASSEMBLY (continued)

CYLINDER BLOCK FRONT COVER

1. Remove screws, nuts and washers fixing the cover.
2. Remove the cover with the relevant gasket.
3. Remove the front oil seal ring from the cover by leveringwith a screwdriver.

Replace the oil seal ring when re-assembling.

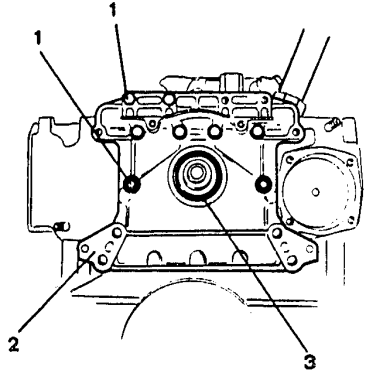

PA049E201

ENGINE DISASSEMBLY (continued)
PISTONS AND CONNECTING RODS

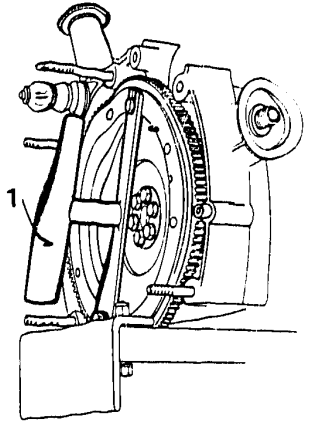

PA050E201

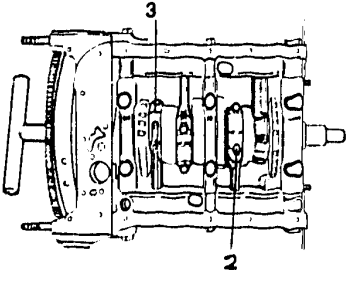

PA050E202

1. Install a suitable tool on the flywheel in order to allow crankshaft rotation.
- Rotate the crankshaft in order to reach the fixing screws of the connecting rod caps.
2. Slacken and remove the fixing screws of the connecting rod caps.
3. Remove the connecting rod caps.

ENGINE DISASSEMBLY

PISTONS AND CONNECTING RODS (continued)

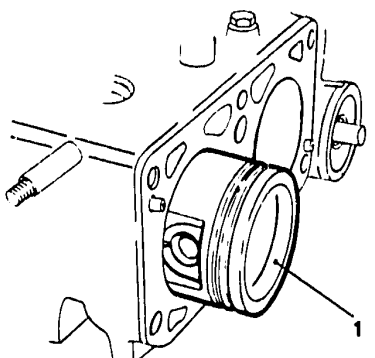

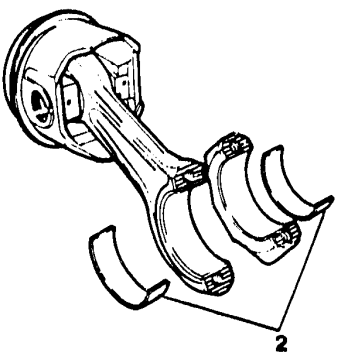

PA051E201

1. Draw out the pistons, complete with connecting rods from the cylinder block by pulling them out from the cylinder head side.

2. Remove the connecting rod half bearings from the big end and the cap.

ENGINE DISASSEMBLY
PISTONS AND CONNECTING RODS (continued)

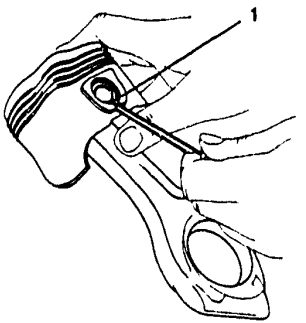

1. By means of a screwdriver, remove the two snap rings which block the piston pin
2. Draw out the piston pin.

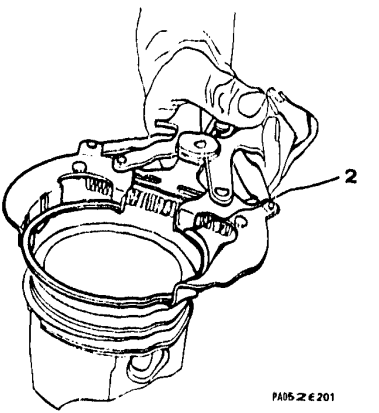

2. Remove the rings and the oil scraper ring from the piston.

ENGINE DISASSEMBLY (continued)

FLYWHEEL AND CYLINDER BLOCK REAR COVER

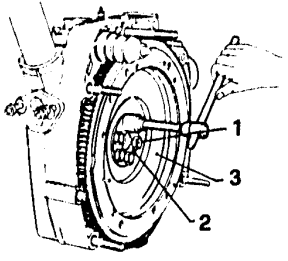

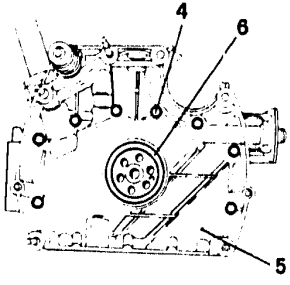

PA053E201

- Remove the tool previously installed on the flywheel to allow its rotation.
- Block the engine flywheel with a suitable device.

1. Remove the screws fixing the flywheel to the crankshaft
2. Remove the lock washer.
3. Remove the engine flywheel.
4. Remove screws and washers fixing the rear cover to the cylinder block.
5. Remove the rear cover with the relevant gasket.
6. Remove the crankshaft rear oil seal ring by levering with a screwdriver.

ENGINE DISASSEMBLY (continued)

CRANKSHAFT

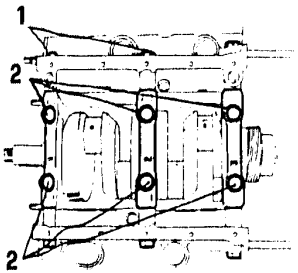

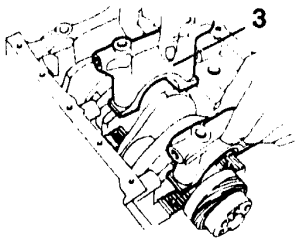

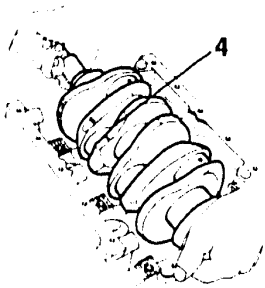

PA054E201

1. Remove the screws fixing the main bearing caps to the cylinder block.
2. Remove the screws fixing the main bearing caps to the relevant main bearings.
3. Remove the caps and the lower main half bearings.
4. Remove the crankshaft from the cylinder block along with the upper main half bearings.

- Remove the half thrust rings located on the third main bearing (flywheel side).

Should upper main half bearings be re-installed, it is necessary to mark their position before removing them.

ENGINE DISASSEMBLY

CRANKSHAFT (continued)

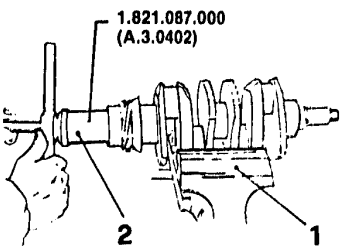

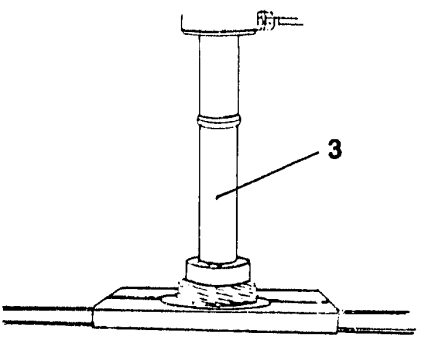

1. Vice the crankshaft.
2. Install the extractor tool N° 1.821.087.000 (A.3.0402) on the crankshaft, and remove the rear guide bush fron the crankshaft drive end.
3. By using a suitable plate and a press, remove the oil pump and ignition distributor drive gear.

CYLINDER HEAD DISASSEMBLY

- Vice the cylinder head supporting tool N° 1.820.012.000 (A.2.0195).
1. Unscrew the wing nut of the supporting tool.
2. Remove the pin of the supporting tool.
   Insert tool N° 1.820.016.000 (A.2.0226) in the supporting tool.
- Re-install the pin and the wing nut of the supporting tool.
- Place the cylinder head on tool N° 1.820.016.000(A.2.0226).
3. Remove the screws fixing the timing camshaft rear cover to the support.
4. Remove the cover and the sealing gasket.
5. Slacken the screws fixing the timing camshaft support to the cylinder head.
6. Remove the timing camshaft support and the relevant gasket, paying attention to collect the oil still contained in the support.

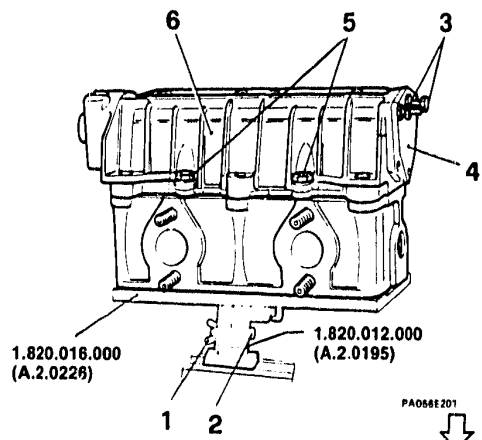

CYLINDER HEAD DISASSEMBLY (continued)

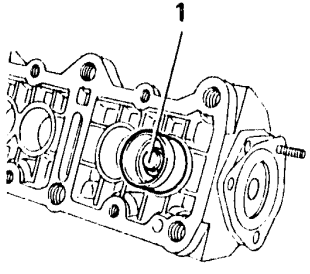

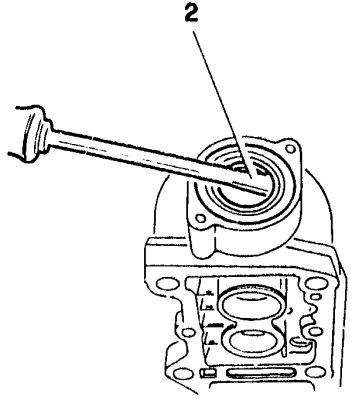

PA0B7E201

1. Remove the tappets from the seats on the support.
- Remove the camshaft by pulling it out from the rear side.
2. Withdraw the front oil seal ring from its seat on the camshaft support by means of a screwdriver.

When reassembling, the oil seal ring must be replaced.

CYLINDER HEAD DISASSEMBLY (Continued)

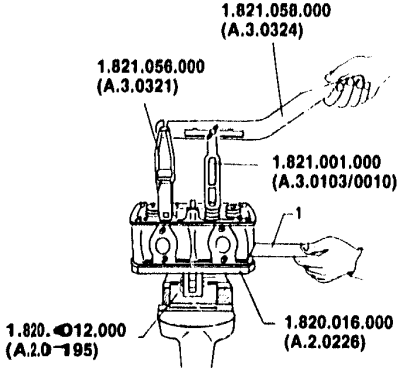

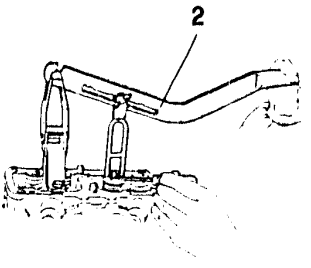

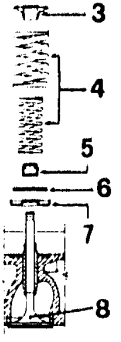

- Mount on the cylinder head the tools N° 1.821.056.000 (A.3.0321), N° 1.821.058.000 (A.3.0324) and N° 1.821.001.000 (A.3.0103/0010), used for removing the valves.

1. Slide the plate for holding the valves into cylinder head supporting tool N° 1.820.016.000 (A.2.0226).
2. Exerting pressure on the lever N° 1.821.058.000 (A.3.0324), press down the springs and, using a screwdriver, remove the cotters from the valve stem.
3. Remove the upper caps.
4. Remove the outer and iner springs.
5. Remove the caps from the intake valves.
6. Remove the washers.
7. Remove the lower cups.

- Repeat disassembly procedure for each valve.

8. Slide out the plate of the cylinder head supporting tool and take out the valves from underneath the cylinder head.

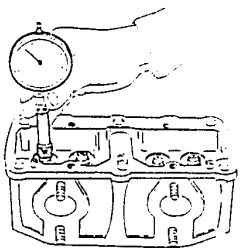

ENGINE WITH ELECTRONIC INJECTION (LE3 - Jetronic)

- CHECKS AND INSPECTIONS

CHECKS AND INSPECTIONS

CYLINDER HEAD LOWER SURFACE ..... 01 - 62
VALVE GUIDE ..... 01 - 63
Determining valve clearance ..... 01 - 63
Valve guide replacement ..... 01 - 64
VALVE SEATS ..... 01 - 65
Replacement ..... 01 - 67
VALVE TIGHTNESS ..... 01 - 68
SPRINGS AND TAPPETS ..... 01 - 69
CAMSHAFT SUPPORT ..... 01 - 70
CAMSHAFT ..... 01 - 71

CHECKS AND INSPECTIONS

CYLINDER HEAD LOWER SURFACE

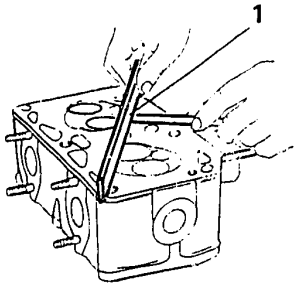

PA059E201

Visually check the cylinder head for cracks or flaws.

1. Check flatness of the cylinder head lower side by consulting the diagram attached to the figure.
- If the cylinder head lower side shows excessive warpage, both cylinder heads will need grinding.

Check the head lower surface for perfect smoothness.

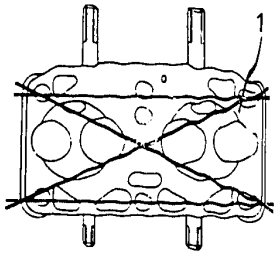

	Max. allowed roughness value mm	1.6 x 10^{-3}
▱	Max. flatness error of cylinder head lower surface mm	0.03
↔	Head minimum height after grinding mm	77.676 ÷ 77.750
//	Maximum allowed parallelism error mm	0.05

Exceeding head minimum height limits after grinding, will cause severe malfunctioning of the engine.

VALVE GUIDE
Determining valve clearance

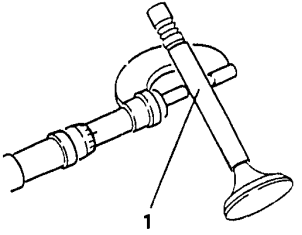

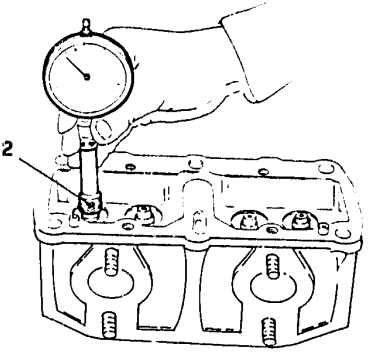

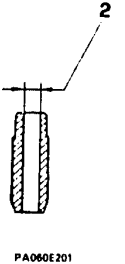

PA060E201

1. Using a micrometer, measure the diameter of the valve stem in three different points orthogonal to one another.
2. Using a dial gauge measure the valve guide bore.

- Compute the clearance by substracting the maximum stem diameter reading from the valve guide bore value.

Max. allowed valve stem-guide clearance	Intake: 0.046 mm
	Exhaust: 0.063 mm

Valve guide replacement

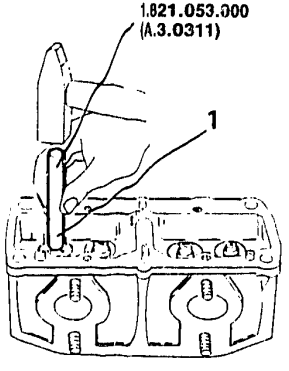

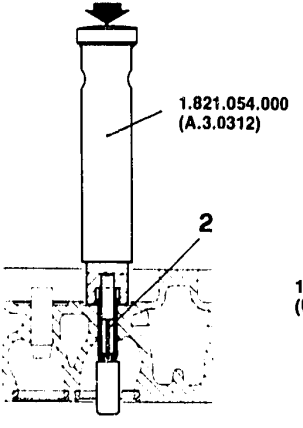

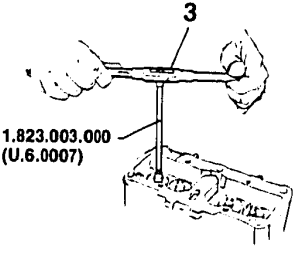

PA061E201

Visually check valve guide integrity.

1. If necessary, remove worn guides by means of tool N° 1.821.053.000 (A.3.0311).
2. Fit new valve guides by using tool N° 1.821.054.000 (A.3.0312).
3. Ream valve guides by using reamer tool N° 1.828.003.000 (U.6.0007) in order to size the holes to the specified diameter.

- After reaming, slightly grind valve seats to ensure correct guide-seat perpendicularity and proper valve working position.

Ø	Valve guide bore:
	8.013 ÷ 8.031 mm

VALVE SEATS

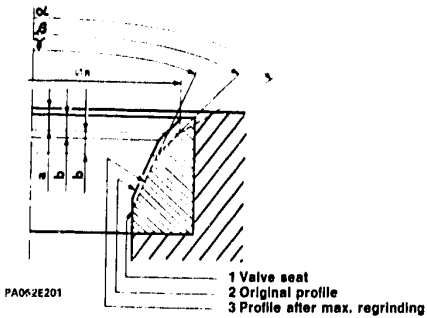

Reference diameter ∅R	
INTAKE	39.0 mm
EXHAUST	31.9 mm

"a" dimension at max. regrinding limit	2.9 mm

Taper of valve seat upper face "α"	120°

Check valve seats for integrity.

- If necessary, mount, the cylinder head on tool N° 1.820.016.000 (A.2.0226) and regrind the valve seats by means of the proper tool.
- Such operation can be performed as long as there is enough grinding allowance which will permit the elimination of existing flaws while keeping the specified profile; otherwise re place valve seats. Regrind valve contact face till removing any evidence of wear and obtaining the specified "ß" taper.

ß = 90° ÷ 90°30'

- Regrinding limits is obtained when reaching dimension "a" on reference diameter $\varnothing_R$.

VALVE SEATS (continued)

- Machine valve seat inner face till dimension "b" of the valve contact face is restored, thus attaining the specified taper "γ".

Inner face height	
Intake	b = 1.07 ÷ 1.37 mm
exhaust	b = 1.26 ÷ 1.56 mm

Valve seat lower face taper	
Intake	γ = 70°
exhaust	γ = 30°

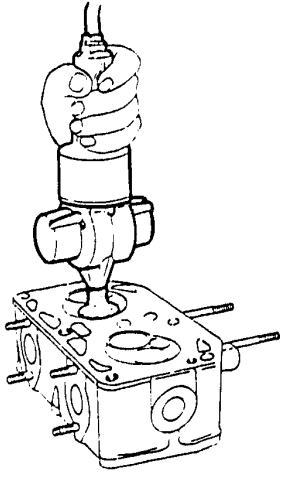

PA063E201

- After copleting all machining operations, lap valve seats with a suitable tool.
- For valve seat lapping, use the specified lapping compound(SIPAL AREXONS Carbosilicium for valves).

VALVE SEATS (continued)
Replacement

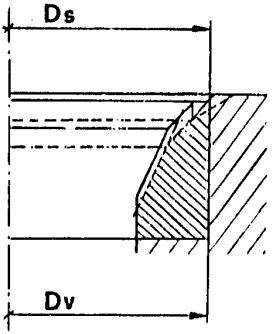

PA064E201

Valve seat outer diameter (Dv) mm	Intake	40.1 $^{0}_{-0.025}$
	exhaust	33.1 $^{0}_{-0.025}$
Valve seat housing diameter (Ds) mm	Intake	40 $^{+0.025}_{0}$
	exhaust	33 $^{+0.025}_{0}$

- Remove worn valve seats by means of the suitable tools.
- With a set of new valve seats, verify that dimensions shown in the following table are complied with:
- Preheat the head at the temperature of 100° ÷ 120°C. in an oven.
- Fit new valve seats by using the suitable tools.

VALVE TIGHTNESS

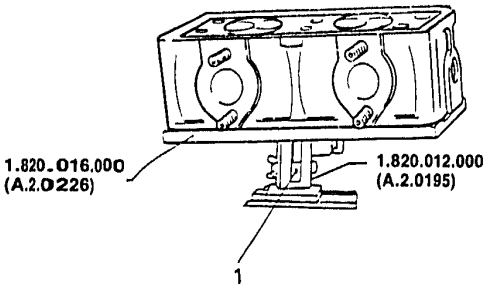

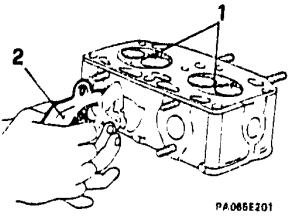

- Mount the cylinder head on tool N° 1.820.016.000 (A.2.0226) and N° 1.820.012.000 (A.2.0195) previously secured in a vice.

1. Fill the combustion chamber cavity with gasoline.
2. Blow low-pressure air into the intake ducts and check for presence of air bubbles in the gasoline.

- Follow the same procedure and check exhaust valve tightness by blowing air in the exhaust valve ducts.
- Should there be some leaks, make sure that valves are properly fitted in their seats and repeat the above-mentioned tightness tests; if the results are negative, valve seats will need a new lapping operation.

SPRINGS AND TAPPETS

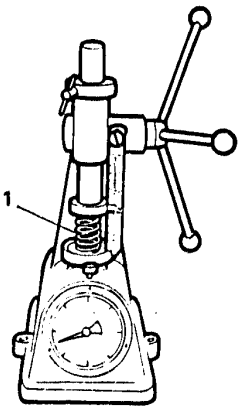

PA068E201

Load N (Kg)	outer spring	438.5 ± 14 (44.7 ± 1.4)
	inner spring	207 ± 7 (21.10 ± 0.71)
Lengthzza under load mm	outer spring	23.25
	inner spring	21.25

Visually check the springs for cracks or yields.

1. By means of a dynamometer, check that the springs technical data comply with the specified values.

Check the tappet outer surface for scoring, pitting or irregular wear.

CAMSHAFT SUPPORT

Check tappets seats and camshaft journals for integrity.

1. Reset the reamer to testing dimensions.
2. Measure the diameter of camshaft bearings and verify if they comply with the specified values.

Ø	Diameter of camshaft bearings
	Front = 35.015 ÷ 35.040 mm
	Centre = 48.000 ÷ 48.025 mm
	Rear = 49.200 ÷ 49.225 mm

- Following the same procedure, measure the diameter of the four tappet seats and determine the backlash.

Ø	Tappet seat Diameter	mm	35.000 ÷ 35.025
	Tappet-seat max. backlash	mm	0.025 ÷ 0.066

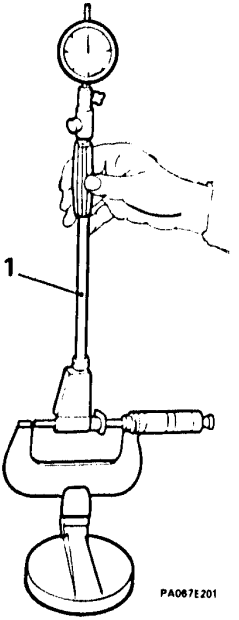

PA067E201

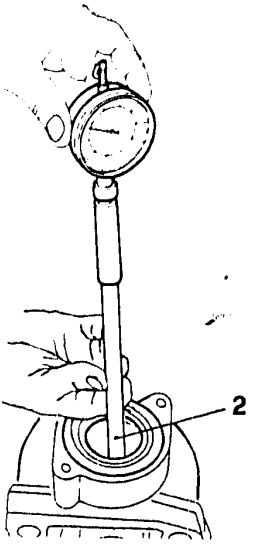

PA067E202

CAMSHAFT

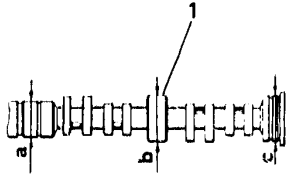

PA06BE201

Carefully examine cam and camshaft journal working surfaces, making sure that there are no scores, no evidence of seizure, overheating or abnormal wear.

1. Using a micrometer, measure the diameter of camshaft journals.

Diameter of camshaft journals
Front a = 34.940 ÷ 34.962 mm
Centre b = 47.940 ÷ 47.956 mm
Rear c = 49.140 ÷ 49.156 mm

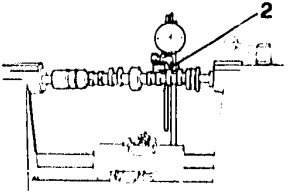

PA06BE202

2. Using a comparator, measure the cam height. Should the height be less than the specified value, replace the camshaft.

Minimum cam height mm	**intake valve cam**	**9,8**
	exhaust valve cam	**9,0**

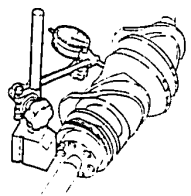

ENGINE WITH ELECTRONIC INJECTION (LE3 - Jetronic)

- CHECKS AND INSPECTIONS (continued)

CHECKS AND INSPECTIONS

CRANKSHAFT ..... 01 - 72
MAIN AND BIG END
HALF BEARINGS ..... 01 - 74
PISTONS AND CONNECTING RODS ..... 01 - 75
ENGINE FLYWHEEL ..... 01 - 76
CYLINDER BLOCK ..... 01 - 77
CYLINDER LINER - PISTON FIT ..... 01 - 79

CHECKS AND INSPECTIONS (continued)

CRANKSHAFT

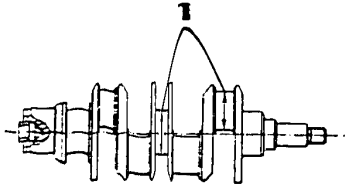

PA069E201

Check and make sure that the working surfaces of crank pins and journals do not show scores or evidence of abnormal wear, pitting or overheating.

1. Check that crank pin and journal dimensions comply with the specified values.

Main journals Ø mm	Blue	59.944 ÷ 59.954
	Red	59.954 ÷ 59.964
Crank pins Ø mm	Blue	49.984 ÷ 49.992
	Red	49.992 ÷ 50.000

CRANKSHAFT (continued)

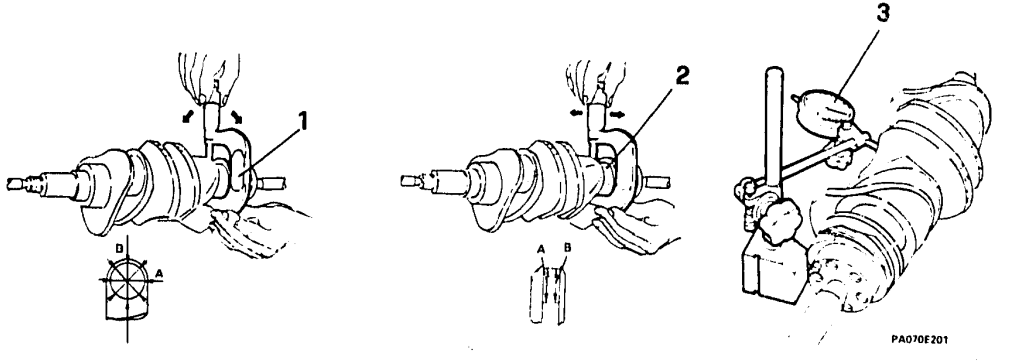

1. Check out-of-round of crank pins by comparing the diameter at different intervals on their circumference.

○	Max. out-of-round error
	A - B = 0.020 mm

2. Check taper of crank pins by comparing the diameter at each pin's extreme ends.

△	Max. taper error
	A - B = 0.020 mm

3. Rotate the crankshaft on to V-blocks placing a dial gauge feeler in contact with the centre main journal and then proceed to measure the crankshaft's out-of-round.

MAIN AND BIG END HALF BEARINGS

- If traces of excessive wear are detected, replace all the bearing halves. The rod bearing halves and crankshaft must be coupled by matching the pieces of the same dimensional class, indicated with blobs of paint of the same colour located on the sides of the bearing halves and on the rod journal of the shaft.
- Thoroughly clean main and big end half bearings and visually check them for scores and for any trace of seizure.

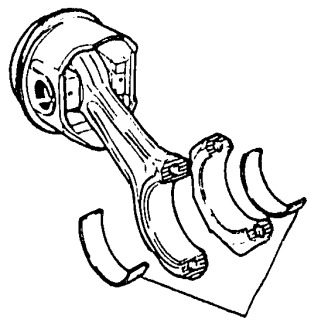

PISTONS AND CONNECTING RODS

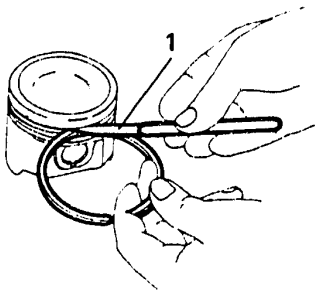

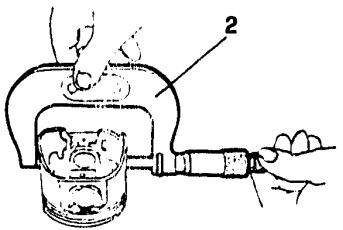

PA072E201

Visually check pistons and connecting rods for cracks, scores and traces of excessive wear.

1. Measure the clearance between the piston rings and the seatings in the piston and check that it is within the specified limits (see TECHNICAL CHARACTERISTICS AND SPECIFICATIONS).
2. Using a micrometer, check that the diameter of the piston is within the prescribed limits (see TECHNICAL CHARACTERISTICS AND SPECIFICATIONS).

- In case of disassembly of piston-connecting rod assy, check piston pin seat on the connecting rod small end and on piston pin bosses for excessive wear.

The piston pin must always be replaced.

ENGINE FLYWHEEL

- Check that the teeth of the gear are not chipped or show traces of pitting; otherwise replace the flywheel.
- Check that the clutch driven plate contact surface on the flywheel does not show scores, chips or traces of overheating.First of all, make sure that the contact surface has not been previously ground and that the amount of material available
  for the removal will be sufficient for the elimination of the existing flaws.
- For this purpose, verify that "b" dimension shown in the diagram is greater than the min. specified limitand that the removable stock will allow surfacing as previously required.

Min. limit of "b" dimension:
24.0 mm

- Surface grinding must be performed in accordance with specified roughness, flatness and parallelism tolerances.

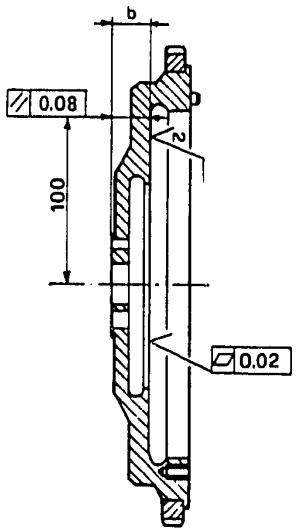

PA073E201

CYLINDER BLOCK

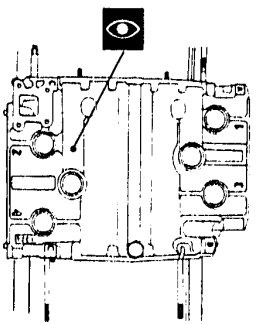

Visually check the cylinder block for cracks or excessive wear of sliding surfaces.
Check cylinder liner surfaces for roughness.

Cylinder liner surface max. roughness
1.0 µm

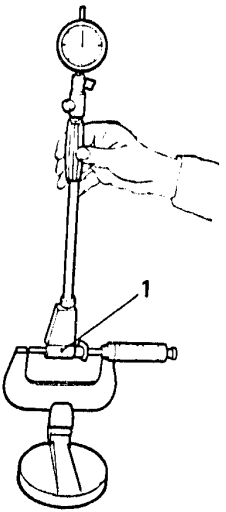

PA074E201

- Determine which size class the cylinder liners belong to and carry out the relevant dimension check.

1. Reset the reamer by means of a micrometer.

CYLINDER BLOCK (continued)

- Measure the diameter at the depth specified in the figure, then determine taper and out-of-round of cylinder liners.

△	**Cylinder liner max. taper**	**A - B = 0.02 mm**
○	**Cylinder liner max. out-of-round**	**X - Y = 0.02 mm**

- Compare actual values D with nominal ones C of each size class and then determine the cylinder liners max. wear.

Cylinder liner max. wear	**C - D = 0.04 mm**

- If the dimensions are not within the specified tollerances the cylinder liners must be re-bored.
  For the dimension refer to the section TECHNICAL CHARACTERISTICS AND SPECIFICATIONS.

⚠ **Lapping must be performed so that tool marks cross each other at an angle of 90° ÷ 120°**

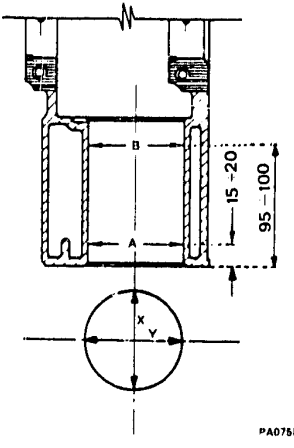

CYLINDER LINER - PISTON FIT

- When original parts are involved, selection takes place by matching each cylinder liner identification letter, stamped on cylinder block upper face, with the piston bearing the same letter stamped on its head or a coloured dot painted inside its crown, according to the following table.

Cylinder liner identifying letter	Piston identifying colour and letter
A	A - blue
B	B - pink
C	C - green
D	D - yellow
E	E - white

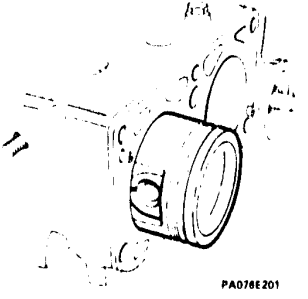

- If the letter stamped on the cylinder block has been erased, the selection must be carried out according to the identification letter stamped on the piston to be replaced; in any case it is advisable to determine the cylinder liner diameter.

- As for oversize cylinder liners, matching must be carried out by using pistons complete with rings and oil scraper ringsavailable as spare parts according to the following cylinder liner oversize scale: 0.2 - 0.4 - 0.6.

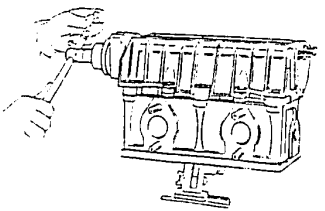

ENGINE WITH ELECTRONIC INJECTION (LE3 - Jetronic)

- CYLINDER HEAD REASSEMBLY
- ENGINE REASSEMBLY

CYLINDER HEAD REASSEMBLY ..... 01 - 80

ENGINE REASSEMBLY

PISTONS AND CONNECTING RODS ..... 01 - 82
CRANKSHAFT ..... 01 - 84
MAIN HALF BEARINGS AND THRUST HALF RINGS ..... 01 - 85
MAIN BEARING CAPS ..... 01 - 86
CYLINDER BLOCK REAR COVER ..... 01 - 88
ENGINE FLYWHEEL ..... 01 - 89
PISTONS AND CONNECTING RODS ..... 01 - 90
CONNECTING ROD CAPS ..... 01 - 91
CYLINDER BLOCK FRONT COVER AND ENGINE FRONT SUPPORT ..... 01 - 92
WATER PUMP ..... 01 - 93

CYLINDER HEAD REASSEMBLY

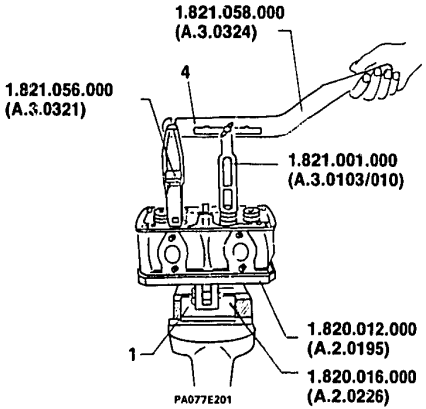

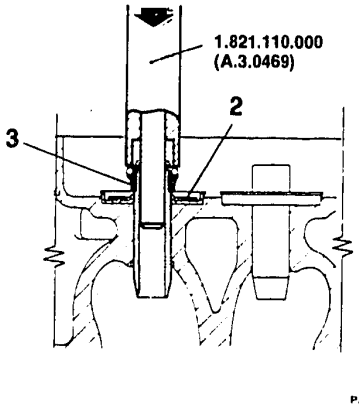

1. Secure the cylinder head on the supporting tool N° 1.820.012.000 (A.2.0195) and N° 1.820.016.000 (A.2.0226) previously viced.
2. Install cups and lower washers into the relevant seats.
3. Insert the seal caps by means of tool N° 1.821.110.000 (A.3.0469).

- Insert the valves into the cylinder head seats and apply the valve retaining steel sheet.
- Fit inner and outer springs and the upper caps on the valve stem.

4. By means of tools N° 1.821.001.000 (A.3.0103/010), N° 1.821.056.000 (A.3.0321) and N° 1.821.058.000 (A.3.0324)install the cotters.

- Withdraw the valve retaining steel sheet and perform the valve tightness test.

CYLINDER HEAD REASSEMBLY (continued)

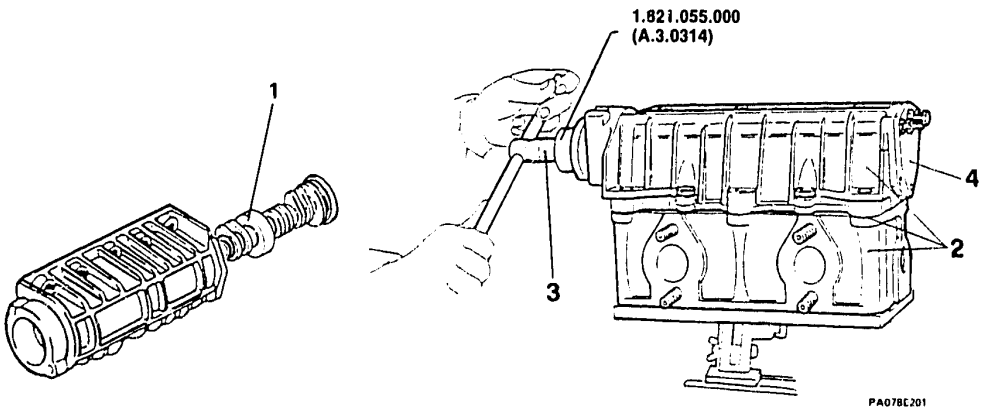

1. Insert the camshaft into its support by drawing it in through the rear side
   - Insert the tappets in the camshaft support seats. Before the assembly, lubricate the tappets and the camshaft with engine oil.
2. Secure the camshaft support to the cylinder head by interposing the relevant gasket and screw down the screws in crossed order without tightening them.
3. Fit the oil seal ring on the camshaft by using tool N° 1.821.055.000 (A.3.0314). Before the assembly, lubricate the ring's sealing lip, the outer surface and the working seat with engine oil.
4. Mount the rear cover with a new gasket and secure it to the support by means of the three screws.

ENGINE REASSEMBLY

PISTONS AND CONNECTING RODS

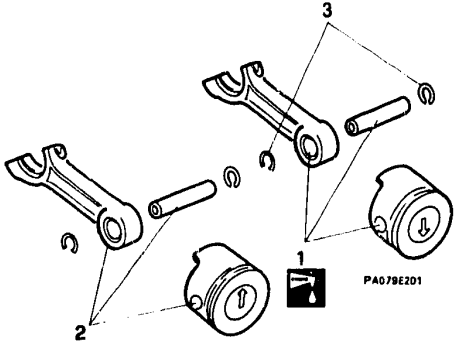

play between liner and piston.	
Standard	0.04 ÷ 0.06
Oversize	0.03 ÷ 0.066 (1) 0.04 ÷ 0.07 (2)

(1) Mondial piston
(2) Borgo piston

- Choose the pistons as indicated in the section "CYLINDER LINERS AND PISTONS".
1. Lubricate the gudgeon pin, the rod small end and the hubs of the piston with engine oil.
- Fit the connecting rod small end between the piston pin supports, checking that the holes are perfectly aligned in order to allow proper piston pin fit.
2. Fit the piston pin into the piston and the connecting rod.
3. Lock the piston pin with two snap rings.

Position the pistons so that the arrow stamped on their crown points in the direction of the engine rotation: upwards for the right head pistons and downwards for the left head pistons.

ENGINE REASSEMBLY

PISTONS AND CONNECTING RODS (continued)

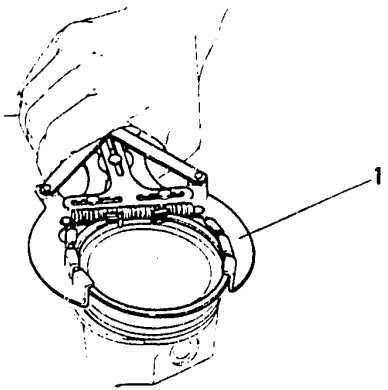

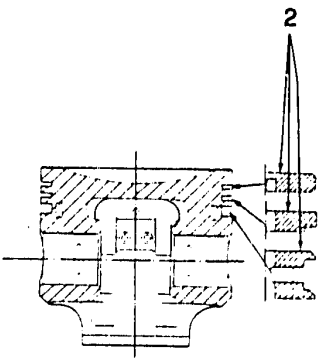

1. Fit the piston pins in hte piston seat by means of special pliers.
2. Make sure that the marking stamped on the flat surface of the rings faces upwards.

ENGINE REASSEMBLY (Continued)

CRANKSHAFT

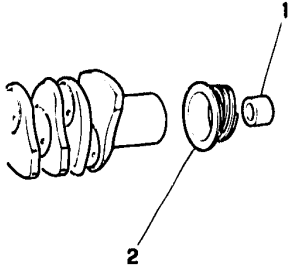

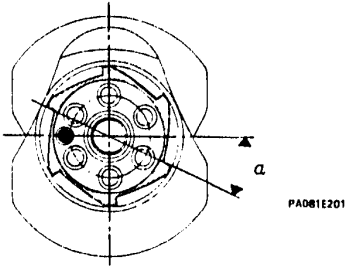

Positioning of crankshaft rear gear
$\alpha = 24° \pm 2°$

1. Fit the rear bush of the crankshaft by using tool N° 1.821.104.000 (A.3.0450).
2. Heat the oil pump and distributor drive gear to 150°C

- Shrink the gear on the crankshaft, positioning it so that the axis of the flywheel centering dowel and the front surface of one of the gear's tooth form the specified angle.

ENGINE REASSEMBLY (Continued)

MAIN HALF BEARINGS AND THRUST HALF RINGS

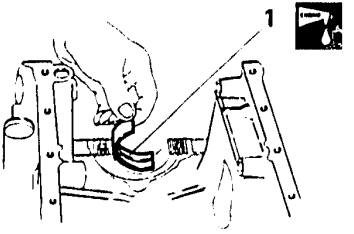

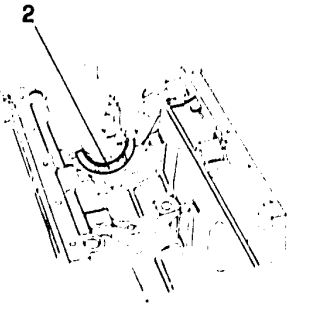

PA082E201

1. Fit main half bearings on main journals and lubricate them with oil.

Select the half bearings according to the main journal diameter.

2. Fit thrust half rings on the relevant seat obtained in hte third main journal.

The half rings must be fitted with the oil grooves facing the crankshaft shoulders.

- Place the crankshaft on main journals.

ENGINE REASSEMBLY (Continued)

MAIN BEARING CAPS

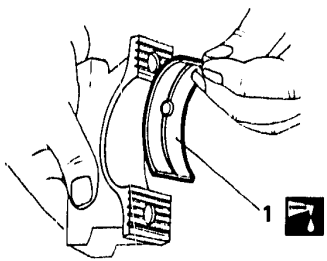

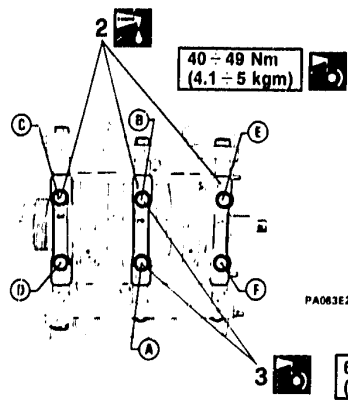

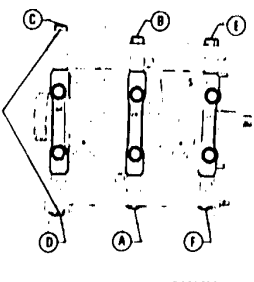

1. Fit main half bearings to main bearing caps and lubricate them with oil.
2. Mount the front, centre and rear bearing caps with the relevant bearings on the cylinder block journals. Lubricate the journals with engine oil and screw down the fixing screws without tightening them.
3. Tighten caps fixing screws to the stated torque in two or three subsequent stages to the cylinder block journals, according to the sequence herewith indicated (from A to F).
4. Successively, in stages, tighten the screw securing the main journal caps to the engine block to the correct torque following the sequence indicated (from A to F).

- After tightening, lubricate the supports with engine oil and rotate the crankshaft by hand.

ENGINE REASSEMBLY (Continued)

1. Set a centesimal comparator on the engine block, setting the feeler in contact with the crankshaft, parallel to the axis of the shaft.
2. Using a screwdriver, move the crankshaft axially and check on the comparator that the end float is within the specified value.

Crankshaft end float
0.056 to 0.248 mm

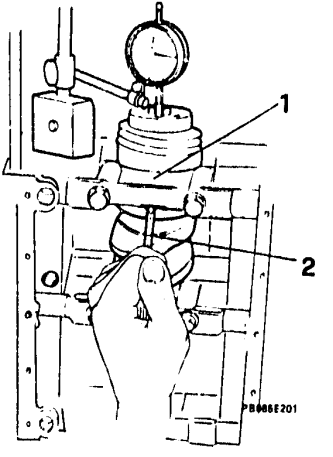

ENGINE REASSEMBLY (Continued)

CYLINDER BLOCK REAR COVER

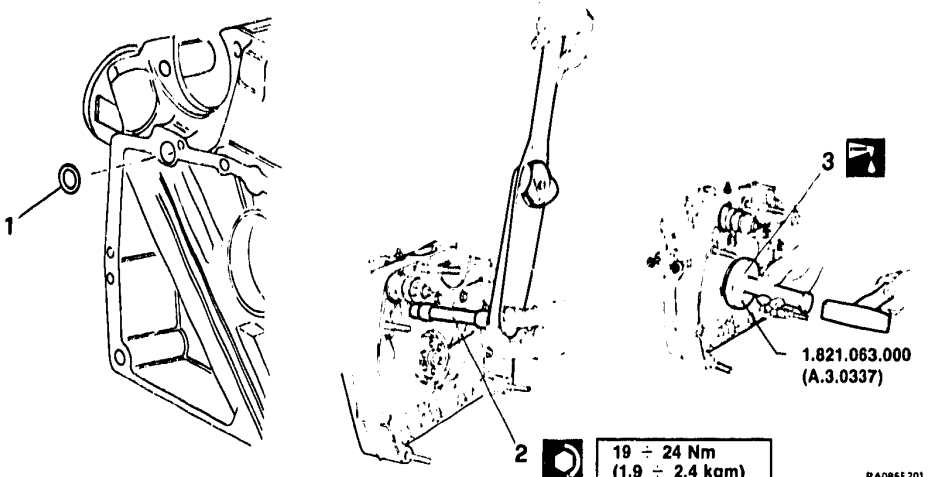

1. Fit the oil seal ring in the main oil duct of the cylinder block rear cover.
2. Fit the rear cover with the relevant gasket on the cylinder block. Tighten all cover retaining screws according to specified torque.
3. Fit crankshaft rear oil seal ring by means of tool N° 1.821.063.000 (A.3.0337), after applying engine oil to the sealing lip, the external surface and the working seat.

ENGINE REASSEMBLY (Continued)

ENGINE FLYWHEEL

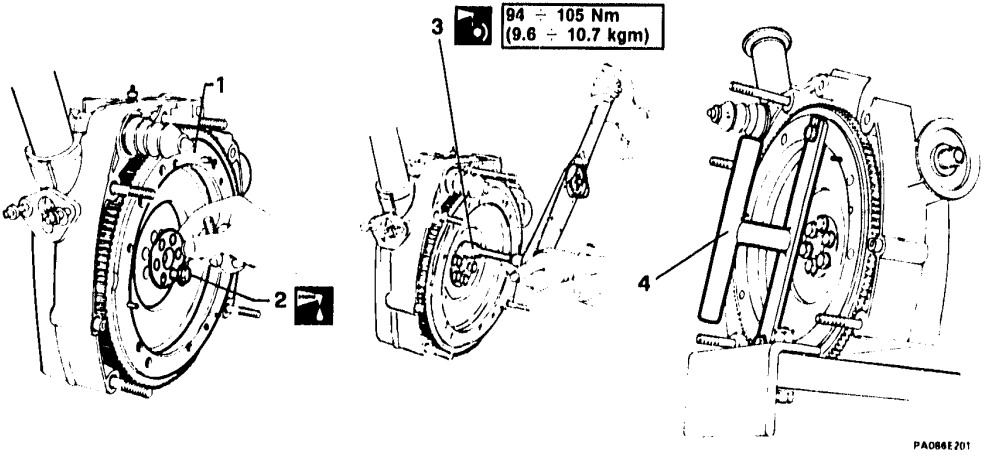

1. Position the flywheel on the crankshaft.
2. Lubricate and screw down all flywheel fixing screws with therelevant lockwasher without tightening them.

- By applying a suitable device, prevent flywheel rotation.

3. Tighten the fixing screws to the specified torque.
4. Fit a suitable tool on the flywheel allowing crankshaft rotation and remove the previously installed blocking device.

ENGINE REASSEMBLY (Continued)

PISTONS AND CONNECTING RODS

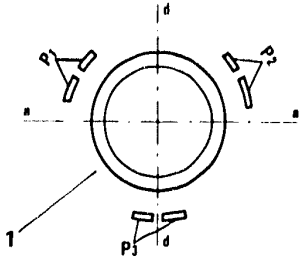

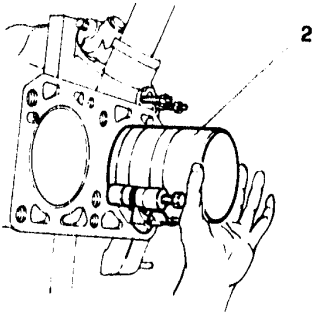

P1 Position of upper compression ring
P2 Position of lower compression ring
P3 Position of scraper ring
aa Piston pin axis
dd Thrust direction

PA0877201

1. Install the piston rings on the pistons so that the cuts are staggered as shown in figure.
- Fit the previously selected half bearings on connecting rod big ends and corresponding caps.
2. Fit the pistons and connecting rods into the corresponding cylinders by means of the relevant universal tool.

When fitting the pistons, arrange them with the arrow stamped on their crown pointing in the same direction of the engine rotation, namely: upwards for right head pistons and downwards for left head pistons.

ENGINE REASSEMBLY (Continued)

CONNECTING ROD CAPS

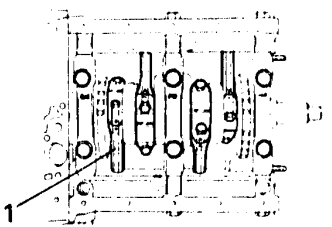

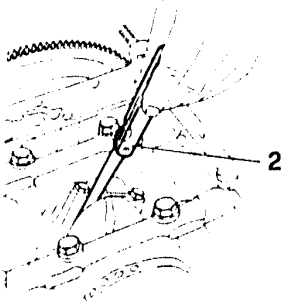

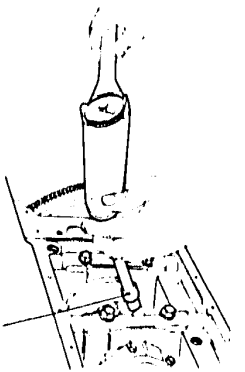

43 ÷ 48 Nm
(4.4 ÷ 4.9 kgm)

1. Fit the connecting rod caps with relevant half bearings onto the connecting rod big ends.
   - Suitably rotate the crankshaft in order to reach the screws.
2. Before tightening the screws, check the play between the crankshaft shoulder and the rod-cap profile by means of a thickness gauge.
3. Tighten the screws to the specified tightening torque.

Play between crankshaft shoulder and rod-cap profile
0.15 mm

ENGINE REASSEMBLY (Continued)

CYLINDER BLOCK FRONT COVER AND ENGINE FRONT SUPPORT

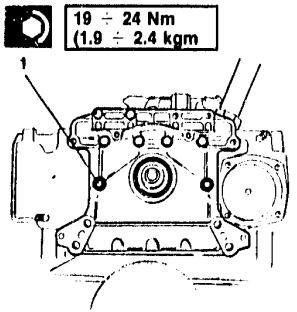

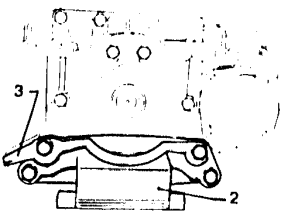

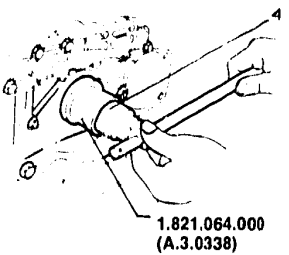

1. Secure the front cover to the cylinder block with the relevant gasket by tightening the screws and the nuts to the specified torque.
2. Secure the engine front support to the cover.
3. Secure the pulley's guard to the cover.
4. Fit the crankshaft oil seal by means of tool N° 1.821.064.000 (A.3.0338).

Before the assembly, lubricate the sealing lip and the working seat of the ring with engine oil.

ENGINE REASSEMBLY (Continued)

WATER PUMP

1. Spline the washer on belt guide.
2. Fit on the toothed pulley of the LH cylinder head timing system.
3. Fit on the spacer.
4. Fit on the toothed pulley of the RH cylinder head timing system.
5. Couple the crankshaft pulley.
6. Fit on the spacer and washer.

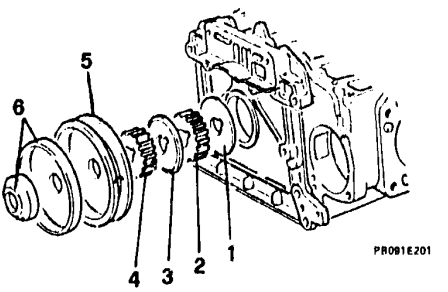

ENGINE REASSEMBLY
WATER PUMP (Continued)

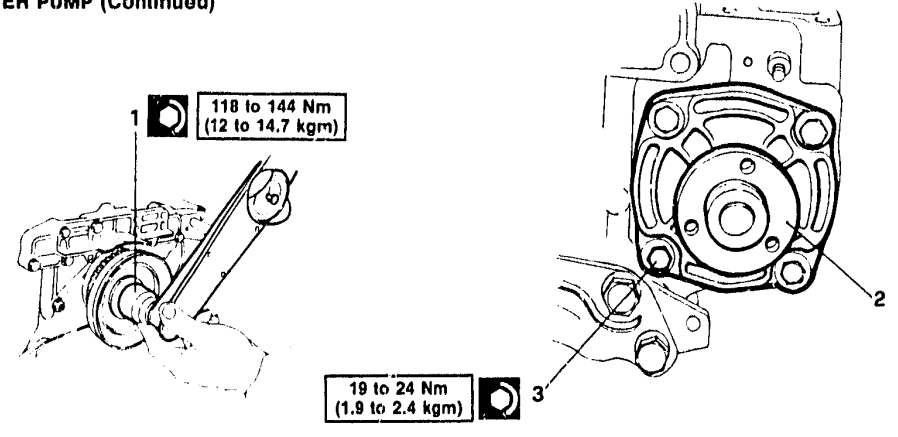

1. Tighten the nut securing the pulleys to the specified torque, after first blocking the flywheel to prevent it rotating.
- Fit a new gasket on the pump.
2. Mount the pump, without pulley, on the engine block.
3. Tighten the screws with washers to the specified torque.

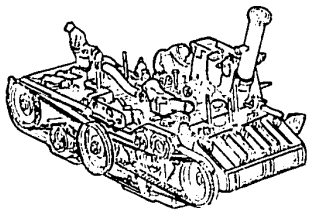

ENGINE WITH ELECTRONIC INJECTION (LE3 - Jetronic)

- ENGINE REASSEMBLY (continued)

ENGINE REASSEMBLY

CYLINDER HEADS ..... 01 - 95
BELT TENSIONER ..... 01 - 97
CAMSHAFT DRIVING PULLEYS ..... 01 - 98
CAMSHAFT DRIVING BELTS ..... 01 - 99
OIL PUMP ..... 01 - 103
INTAKE MANIFOLDS ..... 01 - 106
ALTERNATOR ..... 01 - 109
INJECTION WIRING ..... 01 - 110

ENGINE REASSEMBLY (Continued)

CYLINDER HEADS

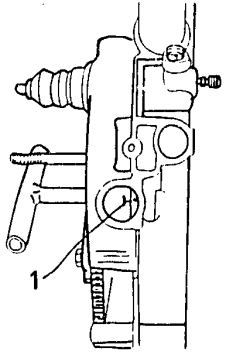

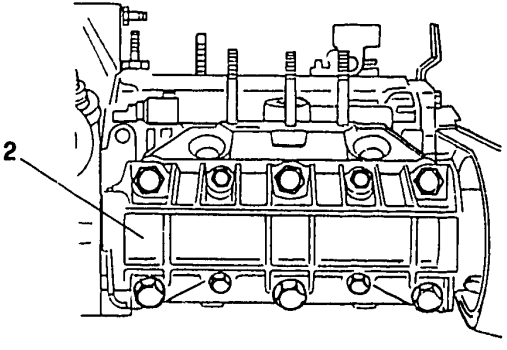

PA091E201

1. Rotate the crankshaft till positioning the piston of cylinder N°1 at Top Dead Center in the compression stroke; the correct position is ensured by the matching of "T" notch on the flywheel with the reference on the rear cover.
- Set the camshafts to their rest position (valves closed).
2. Install the cylinder heads with camshaft support on the cylinder block with the relevant gasket.

During this assembly operation, pay the utmost care in order to avoid that opened valves, if any, projecting from the head surface, might strike the cylinder head surface and thus be damaged.

ENGINE REASSEMBLY

CYLINDER HEADS (continued)

1. Lubricate and then tighten the six retaining screws of the cylinder heads according to the specified torque and sequence(from A to F).
2. Tighten the four fixing screws securing the camshaft supports to the cylinder heads in crossed order and to the specified torque.

- After completing engine installation on the vehicle, heat upthe engine till causing the intervention of the cooling fan then let the engine cool down, unloose, lubricate and tighten the six fixing screws securing the cylinder head to the cylinder block in the sequence and torque specified in the figure.
- In case of interventions on the engine installed with the extension tool N° 1.822.010.000 (A.5.0198), tightening torque values will vary as follows:

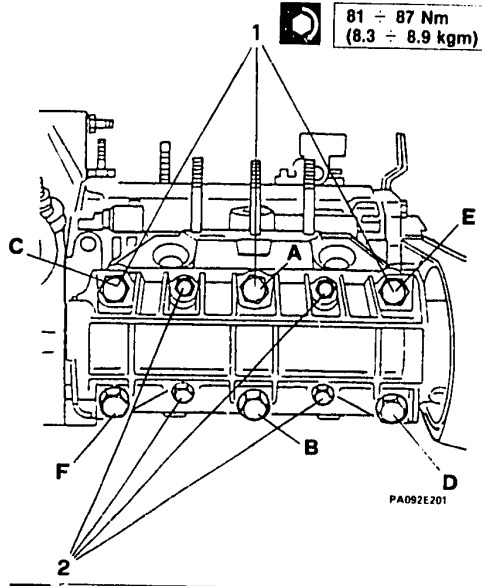

for torque wrench with 300 mm lever arm:	57 ÷ 62 Nm (5.8 ÷ 6.3 Kgm)
for torque wrench with 400 mm lever arm:	62 ÷ 67 Nm (6.3 ÷ 6.8 Kgm)

ENGINE REASSEMBLY (Continued)

BELT TENSIONER

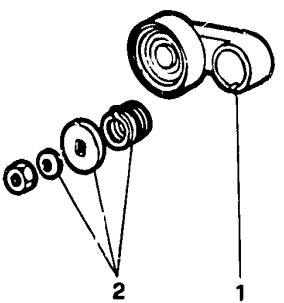

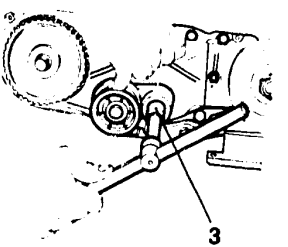

PA093E201

- Fit the rear guards of the timing belts.
1. Fit the belt tensioner supports on the cylinder block pins.
2. Sequentially install the spring and the washers.
3. Lock belt pulley assemblies after having pre-loaded belt pulley in order to allow belt installation.

ENGINE REASSEMBLY (Continued)

CAMSHAFT DRIVING PULLEYS

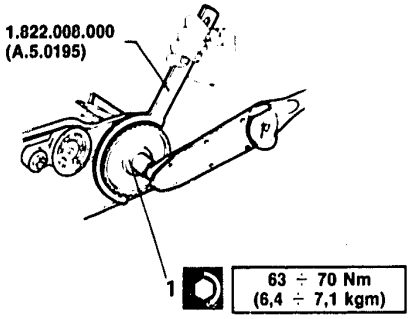

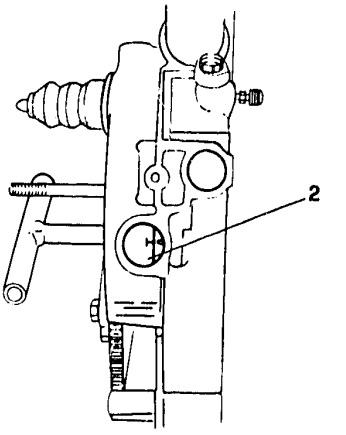

1. Fit camshaft driving pulleys and tighten the retaining screws to the specified torque blocking at the same time pulley rotation by means of tool N° 1.822.008.000 (A.5.0195).
2. Verify that the crankshaft's angular position corresponds to the Top Dead Center of cylinder N° 1.

ENGINE REASSEMBLY (Continued)

CAMSHAFT DRIVING BELTS

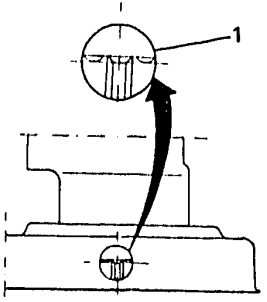

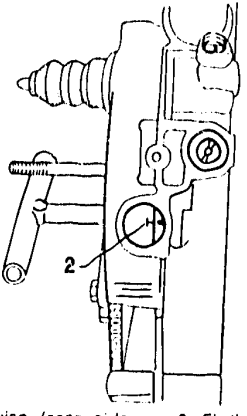

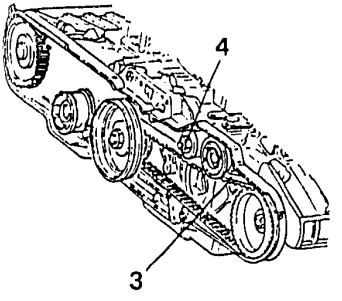

P.A096E201

- Rotate the crankshaft counterclockwise (rear side view) by approx. 45°.

1. Position the left camshaft so that the tooth and the two grooves of the left camshaft driving pulley will be visible through the inspection hole on the rear guard.
2. Align the "T" notch on the flywheel with the fixed reference mark.
3. Fit the left camshaft driving belt on the pulleys.

Belt fitting must be carried out with the belt pulling section, opposite to the jockey pulley, fully stretched.

4. Loosen the nut securing the belt tensioner so that the load conferred by the spring can be exerted on the belt. Tighten the nut.

ENGINE REASSEMBLY

CAMSHAFT DRIVING BELTS (continued)

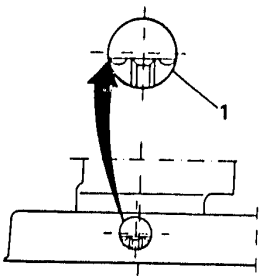

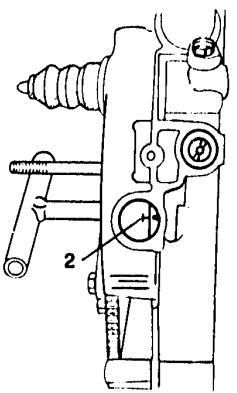

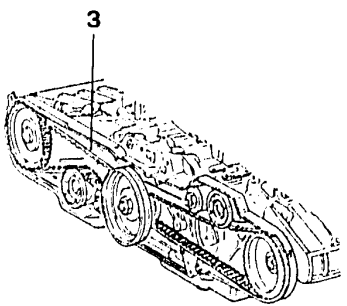

PA096E201

- Rotate again the crankshaft by approx. 45° counterclockwise.

1. Position the right camshaft so that the tooth and the two grooves of the right camshaft driving pulley will be visible through the inspection hole on the rear guard.
2. Align "T" notch on the flywheel with the fixed reference mark.
3. Fit the right camshaft driving belt on the pulleys.

The pulley will tend to rotate as to the correct position; this is due to the camshaft interaction with the intake valve of cylinder N° 3.
For this reason it is necessary to use the toothe wrench N° 1.822.008.000 (A.5.0195) to keep the pulley in the correct position for belt installation.

ENGINE REASSEMBLY

CAMSHAFT DRIVING BELTS (continued)

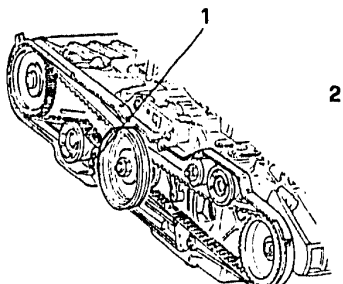

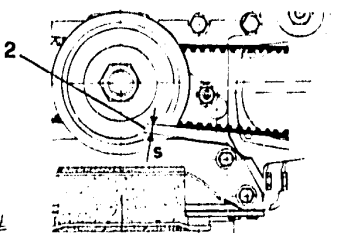

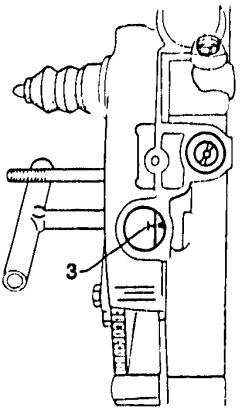

PA097E201

1. Slacken the jockey pulley fixing nut so that it will apply the spring load to the belt.
2. Check that "S" clearance between the camshaft belt and the profile of the engine front support is not below the specified minimum value.

"S" min. clearance between camshaft belt and engine front support	**9 mm**

- Rotate the crankshaft a few times in its working direction so that the belts may take up their final position.
3. Rotate the crankshaft till matching the "T" notch on the flywheel with the fixed reference mark.
- Further rotate the crankshaft counterclockwise (rear side view) till matching the notch "V" on the flywheel with the fixed reference mark.

ENGINE REASSEMBLY

CAMSHAFT DRIVING BELTS (continued)

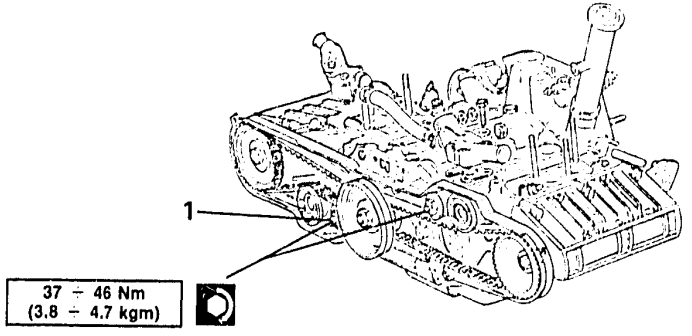

1. Slacken the nut of the right jockey pulley then tighten it to the prescribed torque.

During this operation, do not pull the jockey pulley not to alter its prescribed load.

- For the left camshaft driving belt, perform the same above-mentioned operations for the right belt.
- After finishing all the operations, check the matching of the timing reference marks on the pulleys, through the special inspection holes on hte rear guards, and notch "T" on the flywheel, aligned with the reference mark.

ENGINE REASSEMBLY (Continued)

OIL PUMP

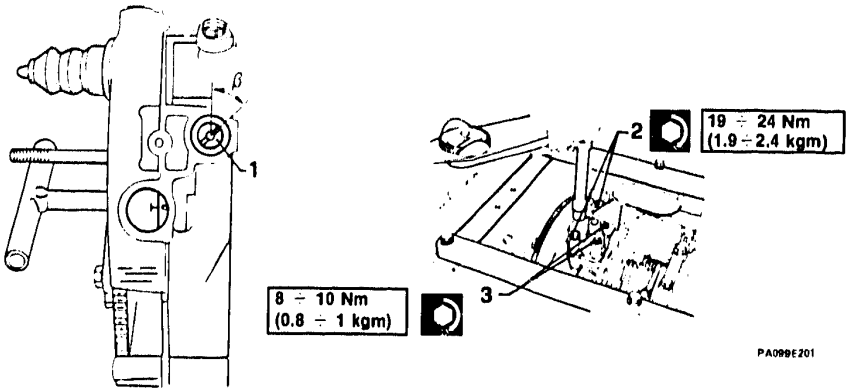

- Rotate the crankshaft till positioning the piston N°1 at the Top Dead Center in compression stroke.

1. Rotate the oil pump drive shaft so that the next rotation directs the engagement of the distributor to the specified angle β.

Distributor coupling position
β = 22°

2. Secure the oil pump to the rear cover by tightening the screws to the specified torque.
3. Tighten the fixing screws between pump body and support to the specified torque.

ENGINE REASSEMBLY (Continued)

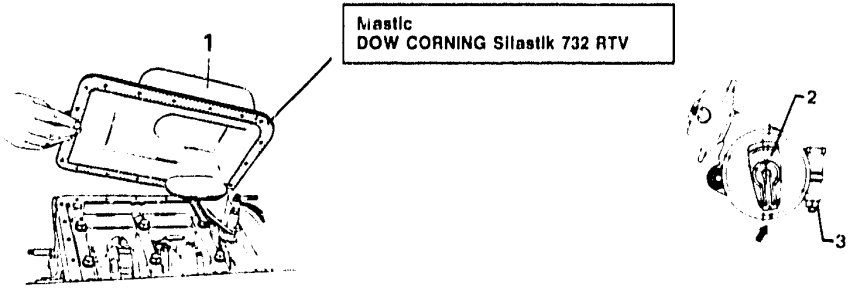

PA100E201

1. Reassemble oil sump with proper gasket and tighten all fixing screws.
- Before this operation, evenly apply the prescribed mastic to the gasket.

Before applying the sealant, remove any trace of the old sealant and degrease all the surfaces.

2. Turn the distributor shaft so that the rotor arm is positioned on the reference marked stamped on the distributor body.
3. Tighten the lock nut securing the distributor to the cylinder block rear cover.

ENGINE REASSEMBLY (Continued)

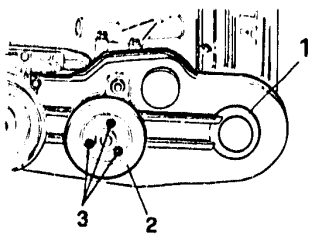

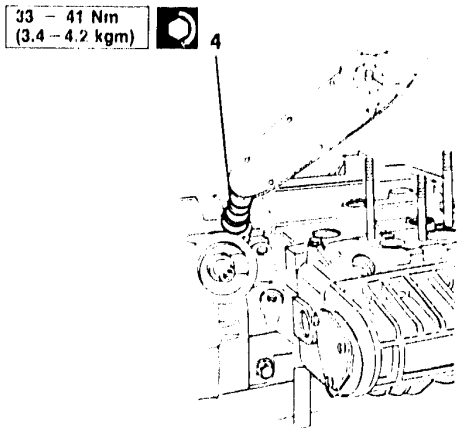

1. Install the front plastic guards of the camshaft driving belts.
2. Install the pulley on the water pump hub.
3. Block the pulley with the three fixing screws.
4. Screw down the pressure switch for oil minimum pressure warning by tightening it to the prescribed torque.

ENGINE REASSEMBLY (Continued)
INTAKE MANIFOLDS

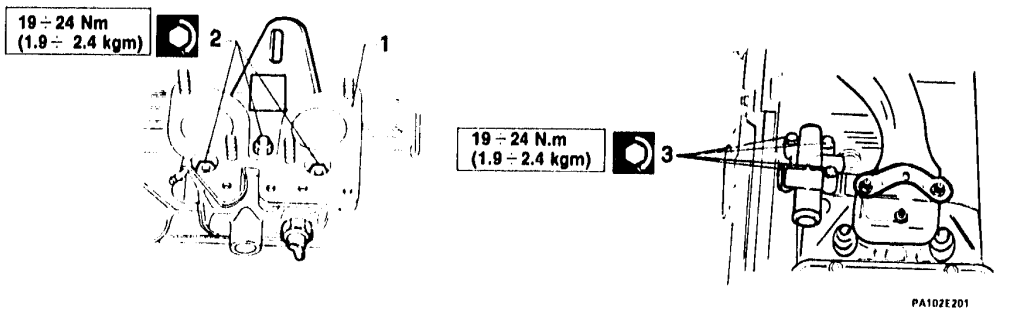

- Install the supplementary air solenoid valve on the right-hand intake manifold.

1. Install the intake manifolds complete with new gaskets on the stud bolts of the two cylinder heads.
2. Secure the manifolds by tightening the relevant nuts to the specified torque.
3. Fit the pipe union on the cylinder block by tightening the four fixing screws to the specified torque.

ENGINE REASSEMBLY (Continued)

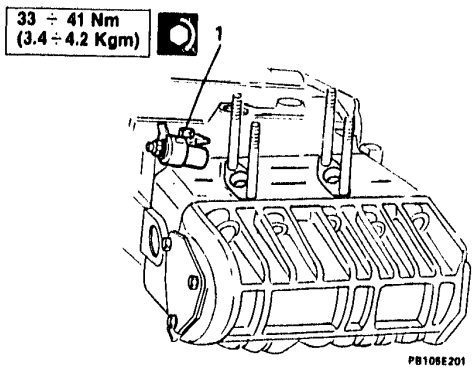

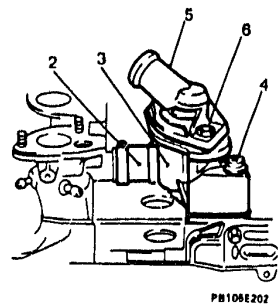

- Mount coolant temperature sender on the LH intake manifold.

1. Secure the max. coolant temperature thermal contact on the RH cylinder head, tightening the screw to the specified torque.
2. Connect the thermostat to the RH intake manifold by means of the sleeve.
3. Mount the thermostat holder on the engine block.
4. Secure the thermostat holder with the screw.
5. Insert the thermostat in the holder.
6. Secure the thermostat in place with the two screws.

ENGINE REASSEMBLY (Continued)

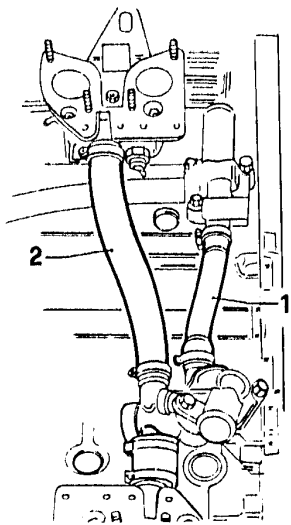

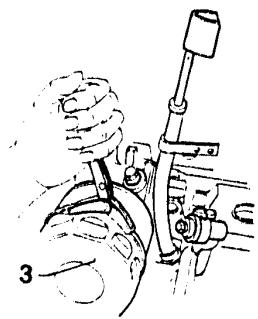

PA104E201

1. Fit the sleeve of the thermostat body on the pipe union.
2. Install the sleeve connecting the thermostatic cup to the left- hand intake manifold.
   - Tighten all the fixing screws of the sleeve clamps.
3. Install the oil filter.

ENGINE REASSEMBLY (Continued)

ALTERNATOR

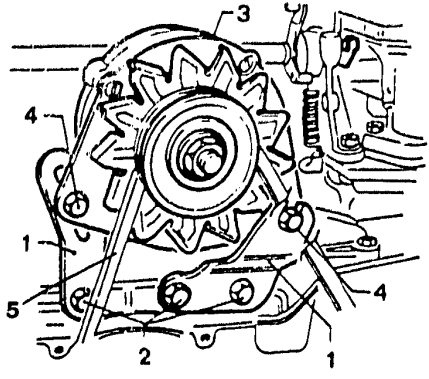

PA105E201

1. Secure the brackets to the engine front cover.
2. Secure the brackets by tightening the fixing screws.
3. Position the alternator on its supports.
4. Screw down the alternator fixing bolts without blocking them.
5. Fit the alternator and water pump driving belt on the relevant pulleys.

- Adjust belt tensioning to the prescribed value. (see **GR. 00**).

ENGINE REASSEMBLY (Continued)

INJECTION WIRING

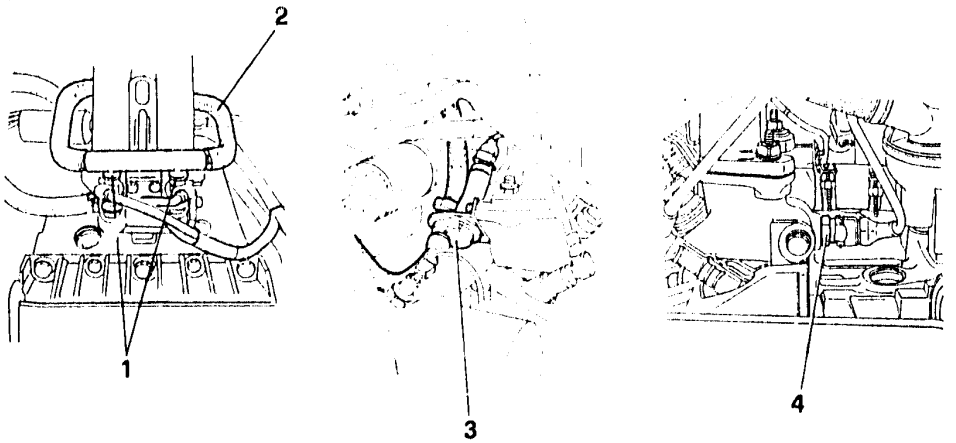

PA106E201

1. Install the electroinjectors on the intake manifolds and replace the O-rings.
2. Secure the fuel distributor manifold.
3. Plug the connector in the additional air solenoid valve.

- Plug the connector in the power module on the ignition distributor.

4. Plug the connectors in the coolant temperature sensor.

- Plug the connectors in the electroinjectors.
- Fit the spark plugs and tighten them to the specified torque.

25 ÷ 34 Nm (2.5 ÷ 3.5 Kgm)

ENGINE WITH ELECTRONIC INJECTION (LE3 - Jetronic)

TCS

- TECHNICAL CHARACTERISTICS AND SPECIFICATIONS

TECHNICAL CHARACTERISTICS AND SPECIFICATIONS

ENGINE SPECIFICATIONS ..... 01 - 111
ENGINE BLOCK ..... 01 - 112
CRANKSHAFT ..... 01 - 114
MAIN HALF BEARINGS ..... 01 - 118
THRUST HALF-RINGS ..... 01 - 118
FLYWHEEL ..... 01 - 120
PISTONS ..... 01 - 122

TECHNICAL CHARACTERISTICS AND SPECIFICATIONS

ENGINE SPECIFICATIONS

Engine type		30750	30736
Cycle		Eight 4 stroke	Eight 4 stroke
No. of cylinders and arrangement		4 horizontal opposed	4 horizontal opposed
Fuel supply system		Electronic injection (LE3 -Jetronic)	Electronic injection (LE3 - JETRONIC)
Bore x stroke	mm	84 × 67.2	87 × 72
Cubic capacity	cc	1490	1712
Combustion chamber volume	cc	44	49.5
Compression ratio		9.5:1	9.5:1
Maximum power output DIN	kW (CV)	71 (98) 70 (97) Δ at 6000 r.p.m.	79 (110) 77 (107) Δ at 5800 r.p.m.
Maximum torque DIN	Nm (Kgm)	126 (13.1) 125 (13) Δ at 4500 r.p.m.	148 (15.5) 145 (15.2) Δ at 4500 r.p.m.

(Δ) Model with catalytic converter.

ENGINE BLOCK

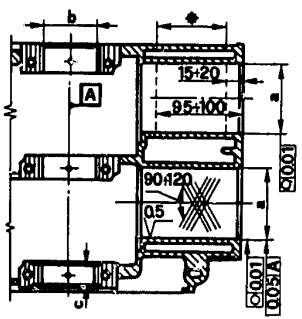

PB110E201

* Area for dimensional check

STANDARD DIMENSIONS			ENGINE 30750	
			CYLINDERS 1-3	CYLINDERS 2-4
Cylinder liner diameter "a" mm	Standard	Cl. A	84.010 to 84.020	84.000 to 84.010
		Cl. B	84.020 to 84.030	84.010 to 84.020
		Cl. C	84.030 to 84.040	84.020 to 84.030
		Cl. D	84.040 to 84.050	84.030 to 84.040
		Cl. E	84.050 to 84.060	84.040 to 84.050
	Oversize	1st	84.21 to 84.22	84.20 to 84.21
		2nd	84.41 to 84.42	84.40 to 84.41
		3rd	84.61 to 4.62	84.60 to 84.61
Maximum deviation from perpendicular between axis of cylinder liner and axis of main bearings mm			0.05	
Cylinder liner ovality and taper limit mm	Design		0.01	
	Max		0.02	
Cylinder liner surface roughness µm			(0.5 to 1)	
Cylinder liner grinding angle			100° to 130°	
Main bearing bore diameter "b" mm			63.663 to 63.673	
Width of rear main bearing shoulder "c" mm				

(CONTINUED)

ENGINE BLOCK (continued)

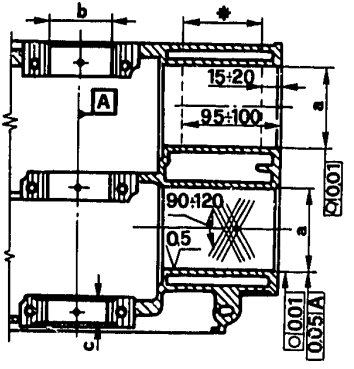

PA117A101

* Area for dimensional check.

STANDARD DIMENSIONS			ENGINE 30736
Diameter of cylinder liner "a" mm	Standard	cl. A	87.000 ÷ 87.010
		cl. B	87.010 ÷ 87.020
		cl. C	87.020 ÷ 87.030
		cl. D	87.030 ÷ 87.040
		cl. E	87.040 ÷ 87.050
	Oversize	1st	87.200 ÷ 87.210
		2nd	87.400 ÷ 87.410
		3rd	87.600 ÷ 87.610
Max. out-of-square between cylinder liner axis and main bearing axis mm			0.05
Liner taper and out-of-round limit mm	As per drawing		0.01
	Max		0.02
Cylinder liner surface roughness μm			(0.5 ÷ 1)
Cylinder liner grinding angle			90° ÷ 120°
Main bearing diameter "b"			63.663 ÷ 63.673
Shoulder width of rear main bearing "c" mm			23.68 ÷ 23.73

CRANKSHAFT

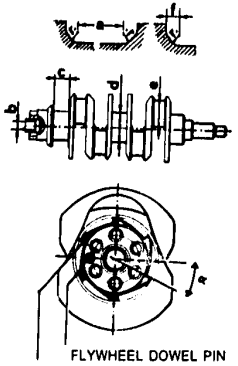

Unit: mm

STANDARD DIMENSIONS			ENGINE 30750
Crankpin diameter "d"	Standard	Blue	49.984 to 49.992
		Red	49.992 to 50.000
Main journal diameter "e"	Standard		59.944 to 59.957
Length of rear main journal "c"			28.51 to 28.55
Radius R	Front and cent. main journals		1.8 to 2
	Rear main journals		1.5 to 1.7
	Crankpins		3.3 to 3.5
Length of radiused section "f"	Front main journal		2.11 to 2.81
Length of cylindrical sections "a"	Central main journals		24.05 to 24.15
	Rear main journals		24.22 to 24.32

(CONTINUED)

CRANKSHAFT (CONTINUED)

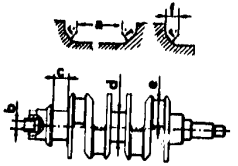

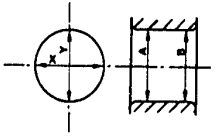

PA118A101

Unit of measurement mm

STANDARD DIMENSIONS		ENGINE 30750
Main journal and crank pin roughness μmm		0.16
Main journal and crank pin out-of-round X-Y and taper A-B	As per drawing	0.006
	Maximum	0.02
Max. error of parallelism between crank pins and main journals		0.015
Max. misalignment among main journals		0.02
Max. misalignment between the axis of the two pairs of crank pins and the main journal axis		0.25
Max. out-of-square between thrust ring face and main journalsli spallamento e perni di banco		0.03
Rear crnkshaft bush, diameter "b"		16.065 – 16.080
Position of crankshaft rear gear "α" (ignition distributor/oil pump drive)		24° ± 2°

(continued)

CRANKSHAFT (Continued)

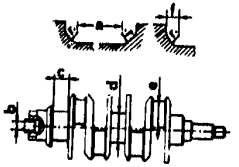

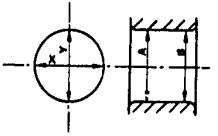

OVALITY X-Y
TAPER A B

PB112E201

Unit: mm

STANDARD DIMENSIONS			ENGINE 30736
Crankpin diameter "d"	Standard	Blue	49.984 to 49.992
		Red	49.992 to 50.000
Main journal diameter "e"	Standard	Blu	59.944 to 59.954
		Red	59.954 to 59.964
Length of rear main journal "c"			28.51 to 28.55
Radius R	Front and cent. main journals		1.8 to 2
	Rear main journals		1.5 to 1.7
	Crankpins		3.3 to 3.5
Length of radiused section "f"	Front main journal		2.11 to 2.81
Length of cylindrical sections "a"	Central main journals		24.05 to 24.15
	Rear main journals		24.22 to 24.32

(CONTINUED)

CRANKSHAFT (CONTINUED)

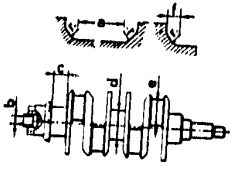

FLYWHEEL CENTERING DOWEL

GEAR TOOTH

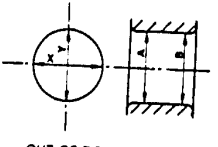

OUT-OF-ROUND X-Y
TAPER A B

PA118A101

Unit of measurement: mm

STANDARD DIMENSIONS		ENGINE
		30736
Main journal and crank pin roughness μmm		0.16
Main journal and crank pin out-of-round X-Y and taper A-B	As per drawing	0.006
	Maximum	0.02
Max. error of parallelism between crank pins and main journals		0.015
Max. misalignment among main journals		0.02
Max. misalignment between the axis of the two pairs of crank pins and the main journal axis		0.25
Max. out-of-square between thrust ring face and main journalsli spallamento e perni di banco		0.03
Rear crnkshaft bush diameter "b"		16.065 – 16.080
Position cf crankshaft rear gear "a" (ignition distributor/oil pump drive)		24° ± 2°

MAIN HALF BEARINGS



PB116E201

Unit: mm

STANDARD DIMENSIONS		ENGINE 30750
Thickness "a"	Standard	1.833 to 1.,839 (1) (2) 1.832 to 1.841 (3)

(1) Supplier's code 2782
(2) Supplier's code 2115
(3) Supplier's code 3062

THRUST HALF RINGS

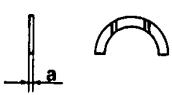

PB116E202

Unit: mm

STANDARD DIMENSIONS		ENGINE 30750
Thickness "a"	Standard	2.311 to 2.362 (1) 2.310 to 2.360 (2)

(1) Supplier's code 2115
(2) Supplier's code 3062 - 2782

(CONTINUED)

MAIN HALF BEARING (continued)



PA120A101

Unit of measurement mm

STANDARD DIMENSIONS		ENGINE 30736
Thickness "a"	Red	1.832 ÷ 1.838
	Blue	1.836 ÷ 1.842

THRUST HALF RINGS

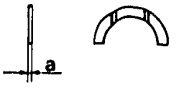

PA120A102

Unit of measurement mm

STANDARD DIMENSIONS	ENGINE 30736
Thickness "a"	2.311 ÷ 2.362

FLYWHEEL

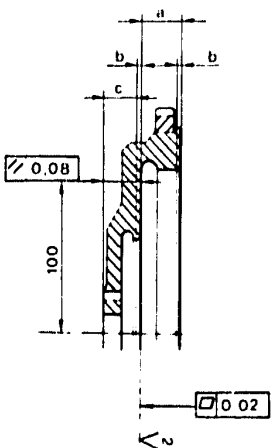

PB11BE201

Unit: mm

STANDARD DIMENSIONS		ENGINE 30750
Grinding dimensions	a	24.0 to 24.2
	b	≤ 0.2
	c	21.15 to 21.35
Max. out-of-parallel between support plane of driven plate and support plane of flywheel to crankshaft (measured on a radius of 100 mm)		0.08
Max. flatness error of driven plate support plane		0.02
Roughness of driven plate support plane	µm	2

Note: The removal of material, dimension "b", must be the same both on the driven plate support plane and on the clutch body support plane, in order not to alter dimension "a". Dimension "c" must not be lower than the indicated value.

(CONTINUED)

FLYWHEEL (continued)

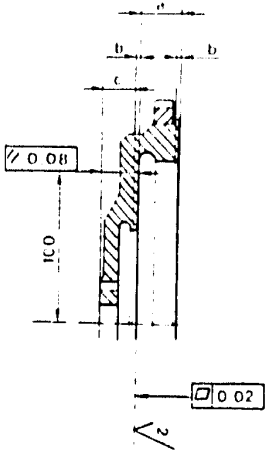

PB11BE201

Unit of measurement: mm

STANDARD DIMENSIONS		ENGINE 30736
Regrinding dimensions	a	24.0 ÷ 24.2
	b	≤ 0.2
	c	≥ 21.15
Max. error of parallelism between driven plate contact face and flywheel-to-crankshaft contact face (measured at a 100 mm radius)		0.08
Max. out-of-flatness error of driven plate contact face		0.02
Surface roughness od driven plate contact face	μmm	2

Note: Regrinding operations of dimension "b", must be the same both on clutch driven plate contact face and on clutch housing contact face, so as to keep dimension "a" constant. Dimension "c" must not be lower than the specified limit.

PISTONS

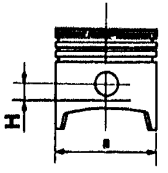

PB120E201

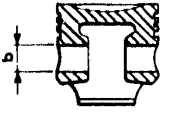

PB120E202

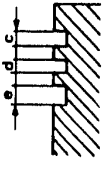

PB120E203

Unit: mm

STANDARD DIMENSIONS			ENGINE 30750	
			Mondial (1)	Borgo (2)
Diameter of piston "a" (measured at right angles to gudgeon pin bore at distance "H" of gudgeon pin bore axis)	Standard	Class A (Blue)	83.960 to 83.970	
		Class B (Pink)	83.970 to 83.980	
		Class C (Green)	83.980 to 83.990	
		Class D (Yellow)	83.990 to 84.000	
		Class E (White)	84.000 to 84.010	
	Oversize	1st	84.154 to 84.170	84.150 to 84.170
		2nd	84.354 to 84.370	84.350 to 84.370
		3rd	84.544 to 84.570	84.550 to 84.570
Groove height of 1st compression ring "c"			1.525 to 1.545	
Groove height of 2nd compression ring "d"			1.775 to 1.795	
Groove height of oil scaper ring "e"			4.015 to 4.035	
Diameter of gudgeon pin bore in piston "b"			21.004 to 21.008	

(1) H = 11.5 mm (2) H = 15.5 mm

(CONTINUED)

PISTONS (continued)

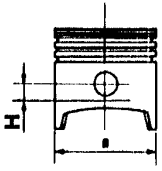

PA122A101

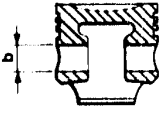

PA122A102

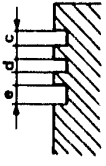

PA122A103

Unit of measurement: mm

STANDARD DIMENSIONS			ENGINE 30736	
			Mondial (1)	Borgo (2)
Piston diameter "a" (to be measured perpendicularly to the piston pin hole, at dimension "H" of the piston pin axis.	Standard	Class A (Blue)	86.950 ÷ 86.960	
		Class B (Pink)	86.960 ÷ 86.970	
		Class C (Green)	86.970 ÷ 86.980	
		Class D (Yellow)	86.980 ÷ 86.990	
		Class E (White)	86.990 ÷ 87.000	
	Oversize	1st	87.144 - 87.160	87.140 - 87.160
		2nd	87.344 - 87.360	87.340 - 87.360
		3th	87.544 - 87.560	87.540 - 87.560
First piston ring groove height "c"			1.515 - 1.535	1.535 - 1.555
Second piston ring groove height "d"			1.775 ÷ 1.795	
Oil scraper ring groove height "e"			3.015 ÷ 3.035	
Piston pin seat bore "b"			21.004 ÷ 21.008	

(1) H = 13.9 mm (2) H = 11.5 mm

ENGINE WITH ELECTRONIC INJECTION (LE3 - Jetronic)

TCS

- TECHNICAL CHARACTERISTICS AND SPECIFICATIONS (continued)

TECHNICAL CHARACTERISTICS AND SPECIFICATIONS

GUDGEON PINS ..... 01 - 124
COMPRESSION RINGS ..... 01 - 124
CONNECTING ROD ..... 01 - 126
CONNECTING ROD HALF BEARING ..... 01 - 126
CYLINDER HEADS ..... 01 - 127
VALVES ..... 01 - 129
VALVE SEAT SKIMMING DIMENSIONS ..... 01 - 129
SPRINGS ..... 01 - 131
CAMSHAFT SUPPORT
AND VALVE TAPPETS ..... 01 - 131

GUDGEON PINS

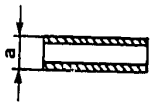

PB122E201

Unit: mm

STANDARD DIMENSIONS	ENGINE 30750
Diameter of gudgeon pin "a"	20.966 to 21.000
Gudgeon pin - piston clearance	0.004 to 0.012

COMPRESSION RINGS

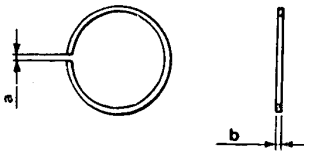

PB122E202

Unit: mm

STANDARD DIMENSIONS		ENGINE 30750	
Thickness of rings "b"	First ring	1.478 to 1.490	
	Second ring	1.728 to 1.740	
	Oil scraper ring	3.978 to 3.990	
Ring gap (1) "a"	First ring	0.30 to 0.50 (2)	0.30 to 0.45 (3)
	Second ring	0.30 to 0.50 (2)	0.30 to 0.45 (3)
	Oil scraper ring	0.25 to 0.50 (2)	0.25 to 0.45 (3)
	Limit gap for each ring	1	

(1) To be measured inside ring gauge or cylinder liner bore
(2) Supplier's code 1246 (3) Supplier's code 1246

(CONTINUED)

GUDGEON PINS (continued)

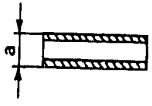

PA123A101

Unit of measurement mm

STANDARD DIMENSIONS	ENGINE 30736
Piston pin diameter "a"	20.966 ÷ 21.000
Piston pin-piston play	0.004 ÷ 0.012

COMPRESSION RINGS

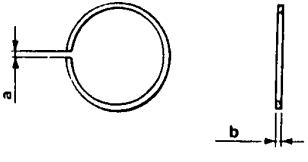

PA123A102

Unit of measurement mm

STANDARD DIMENSIONS		ENGINE 30736
Ring thickness "b"	First ring	1.478 ÷ 1.490
	Second ring	1.728 ÷ 1.740
	Oil scraper ring	2.978 2.990 (2) 2.975 - 2.990 (3)
Ring gap (1) "a"	First ring	0.30 ÷ 0.50
	Second ring	0.30 ÷ 0.50
	Oil scraper ring	0.25 ÷ 0.50
	Limit gap for each ring	1

(1) To be measured in the ring gauge or in the cylinder liner
(2) Borgo ring (3) Goetze ring

CONNECTING ROD

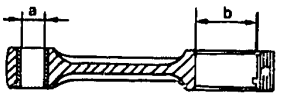

PB124E201

Unit: mm

STANDARD DIMENSIONS	ENGINES	
	30750	30736
Diam. of conn. rod small end bush bore "a"	21.007 to 21.015	21.007 to 21.015
Internal diam. of conn. rod big end "b"	53.696 to 53.708	53.696 to 53.708

CONN. ROD HALF BEARING



PB124E202

Unit of measurement: mm

STANDARD DIMENSIONS		ENGINES	
		30750	30736
Thickness of conn. rod half bearing "a"	Blue	1.830 to 1.836	1.830 to 1.836
	Red	1.820 to 1.832	1.826 to 1.832

CYLINDER HEADS

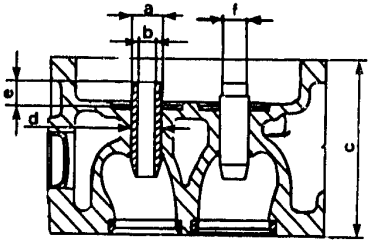

PB125E201

Unit: mm

STANDARD DIMENSIONS		ENGINE 30750
Diam. of valve guide seat "d"		13.000 to 13.018
Ext. diam. of valve guide "a"	Standard	13.050 to 13.068
Int. diam. of valve guide (bore) "b"		8.013 to 8.031
Diam. of seat for valve stem cap "f"		10.85 to 10.95
Valve guide protrusion "e"		9.3 to 9.5
Min. permissible cylinder head protrusion after skimming "c" (1)		77.676 to 77.750
Max. out-of- parallel between cylinder head faces		0.05
Max. out-of-flatness for lower head face		0.03
Roughness of lower head face	µm	1.6

(1) The skimming of the cylinder heads with hemispherical combustion chamber must be carried out on both cylinder heads of engine.

(CONTINUED)

CYLINDER HEADS (continued)

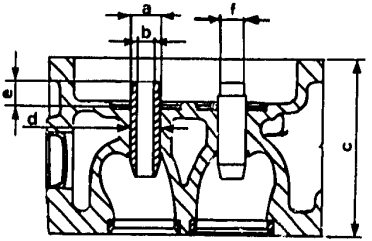

PA125A101

Unit of measurement: mm

STANDARD DIMENSIONS		ENGINE 30736
Valve guide seat diameter "d"		13.000 ÷ 13.018
Valve guide outer diameter "a"	Series	13.050 ÷ 13.068
Valve guide bore (reaming) "b"		8.013 ÷ 8.031
Valve stem seal cap seat diameter "f"		10.85 ÷ 10.95
Valve guide protrusion "e"		9.3 ÷ 9.5
Min. cylinder head protrusion after flattening "c" (1)		77.676 ÷ 77.750
Max. error of parallelism between cylinder head surfaces		0.05
Max. flatness error of cylinder head lower surface		0.03
Cylinder head lower surface roughness µmm		1.6

(1) Flattening of cylinder heads with hemispherical combustion chambers must be done on both heads of the same engine.

VALVES

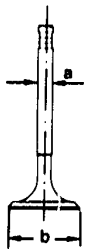

PB127E201

Unit: mm

STANDARD DIMENSIONS		ENGINE 30750
Valve stem diameter "a"	Intake	7.985 to 8.000
	Exhaust	7.968 to 7.983
Valve head diameter "b"	Intake	39.700 to 39.990
	Exhaust	33.000 to 33.200

VALVE SEAT SKIMMING DIMENSIONS

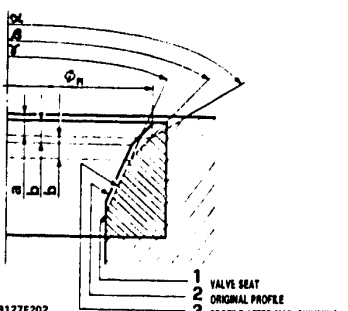

PB127E202

Unit: mm

STANDARD DIMENSIONS		ENGINE 30750
Reference diameter "ØR"	Intake	39.0
	Exhaust	31.9
Skimming limit of upper section of valve seat "a"	Intake	2.9
	Exhaust	
Skimming limit of valve seat contact section "b"	Intake	1.07 to 1.37
	Exhaust	1.26 to 1.56
Valve seat upper section limit taper "α"	Intake	120°
	Exhaust	
Valve seat contact section limit taper "β"		90° to 90°30'
Valve seat internal section limit taper "γ"	Intake	70°
	Exhaust	30°

(CONTINUED)

VALVES (continued)

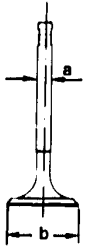

PA126A101

Unit of measurement mm

STANDARD DIMENSIONS		ENGINE 30736
Valve stem diameter "a"	Intake	7.985 - 8.000
	Exhaust	7.968 - 7.983
Valve head diameter "b"	Intake	39.700 - 39.990
	Exhaust	33.00 - 33.20

VALVE SEAT SKIMMING DIMENSIONS

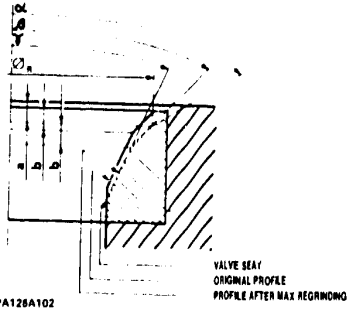

PA126A102

Unit of measurement mm

STANDARD DIMENSIONS		ENGINE 30736
Reference diameter "ØR"	Intake	39.0
	Exhaust	31.9
Regrinding limit of valve seat upper surface "a"	Intake	2.9
	Exhaust	
Regrind limit of valve seat mating surface "b"	Intake	1.07 - 1.37
	Exhaust	1.26 - 1.56
Valve seat upper surface limit taper "α"	Intake	120°
	Exhaust	
Valve seat mating surface limit taper "β"		90° - 90°30'
Valve seat inner surface limit taper "γ"	Intake	70°
	Exhaust	30°

SPRINGS

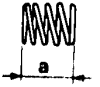

PB129E201

Unit: mm

STANDARD DIMENSIONS			ENGINE 30750
Length of spring with valve open "a"	Outer spring	mm	23.25
	Inner spring	mm	21.25
Spring load at length "a"	Outer spring N	(kg)	438.5 ± 14 (44.7 ± 1.4)
	Inner spring N	(kg)	207 ± 7 (21.10 ± 0.70)
Free length	Outer spring N	(kg)	45
	Inner spring N	(kg)	44

CAMSHAFT SUPPORT AND VALVE TAPPETS

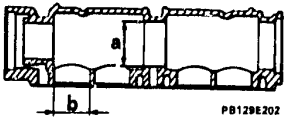

PB129E202

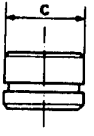

PB129E203

Unit of measurement: mm

STANDARD DIMENSIONS		ENGINE 30750
Diameter of camshaft journal seat "a"	Front	35.015 to 35.040
	Centre	48.000 to 48.025
	Rear	49.200 to 49.225
Diameter of valve tappet seat "b"		35.000 to 35.025
Diameter of tappet "c"		34.959 to 34.975

(CONTINUED)

SPRINGS (continued)



PA127A101

Unit of measurement mm

STANDARD DIMENSIONS		ENGINE 30736
Spring length with valve opened "a"	Outer spring mm	23.25
	Inner spring mm	21.25
Spring load at length "a"	Outer spring N (kg)	438.5 ± 14 (44.7 ± 1.4)
	Inner spring N (kg)	207 ± 7 (21.10 ± 0.71)

CAMSHAFT SUPPORT AND VALVE TAPPETS

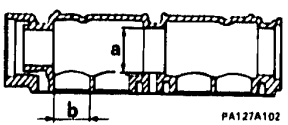

PA127A102



PA127A103

Unit of measurement mm

STANDARD DIMENSIONS		ENGINE 30736
Camshaft bearing seat diameter "a"	Front	35.015 ÷ 35.040
	Central	48.000 ÷ 48.025
	Rear	49.200 ÷ 49.225
Valve tappet seat diameter "b"		35.000 ÷ 35.025
Tappet diameter "c"		34.959 ÷ 34.975

ENGINE WITH ELECTRONIC INJECTION (LE3 - Jetronic)

TCS

- TECHNICAL CHARACTERISTICS AND SPECIFICATIONS (continued)
- SPECIFIC TOOLS

TECHNICAL CHARACTERISTICS AND SPECIFICATIONS

CAMSHAFT ..... 01 - 133
ASSEMBLY INTERFERENCE FITS AND CLEARANCES ..... 01 - 134
HEATING TEMPERATURES ..... 01 - 135
CHECKS AND ADJUSTMENT ..... 01 - 138
Timing data ..... 01 - 138
Valve opening and closing angle check ..... 01 - 140
FLUIDS AND LUBRICANTS ..... 01 - 141
SEALANTS AND FIXING AGENTS ..... 01 - 141
ABRASIVES ..... 01 - 141
TIGHTENING TORQUES ..... 01 - 142

SPECIFIC TOOLS ..... 01 - 144

CAMSHAFT

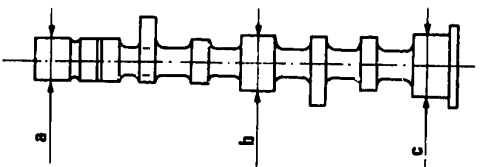

PB131E201

Unit: mm

STANDARD DIMENSIONS		ENGINES	
		30750	30736
Height of cams	Intake	9.8	9.8
	Exhaust	9.00	9.00
Diameter of camshaft journal	Front "a"	34.940 to 34.962	34.940 to 34.962
	Centre "b"	47.940 to 47.956	47.940 to 47.956
	Rear "c"	49.140 to 49.156	49.140 to 49.156

ASSEMBLY INTERFERENCE FITS AND CLEARANCES

Unit: Nm (Kgm)

STANDARD DIMENSIONS		ENGINE 30750	
Clearance between liner and piston	Normal	0.04 to 0.06 (CYLINDERS 1-3)	0.04 to 0.05 (CYLINDERS 2-4)
	Oversize	0.04 to 0.066 (1) 0.04 to 0.07 (2)	0.03 to 0.056 (3) 0.03 to 0.06 (4)
End float between compression rings and seats	First ring	0.035 to 0.067	
	Second ring	0.035 to 0.067	
	Oil scraper ring	0.025 to 0.057	
Clearance between piston bore and gudgeon pin		0.004 to 0.042	
Clearance between small end bushing and gudgeon pin		0.007 to 0.049	
Radial clearance between main journal and main bearing		0.041 to 0.05 (5)	0.037 to 0.052 (6)
Radial clearance between big end bearings and main journals		0.032 to 0.064	
Crankshaft end float		0.056 to 0.248	

(1) Cylinders 1-3 and Mondial piston (3) Cylinders 2-4 and Mondial piston (5) Suppliers' code - Half bearings: 2782-2115 (CONTINUED)
(2) Cylinders 1-3 and Borgo piston (4) Cylinders 2-4 and Borgo piston (6) Supplier's code - Half bearings: 3062

ASSEMBLY INTERFERENCE FITS AND CLEARANCES (CONTINUED)

STANDARD DIMENSIONS		ENGINE
		30750
Radial clearance between journal and camshaft seat	Front	0.053 to 0.1
	Centre - Rear	0.044 to 0.085
Radial clearance between valve tappet and seat on camshaft bearing		0.025 to 0.066
Radial clearance between valve stem and valve guide	Intake	0.013 to 0.046
	Exhaust	0.03 to 0.063
Interference fit between valve guide and valve guide seat	Intake	0.032 to 0.068 (STANDARD)
	Exhaust	

HEATING TEMPERATURES

COMPONENT	ENGINE
	30750
Cylinder head temperature for fitting valve seats	140° to 160 °C
Starter ring gear temperature for shrinking on to flywheel	120° to 140 °C

(CONTINUED)

ASSEMBLY INTERFERENCE FITS AND CLEARANCES (CONTINUED)

Unit of measurement: Nm (Kgm)

STANDARD DIMENSIONS		ENGINE
		30736
Clearance between liner and piston	Standard	0.04 ÷ 0.06
	Oversize	0.03 ÷ 0.066 (*) 0.04 ÷ 0.07 (**)
End play between seats and piston rings	First ringlo	0.025 ÷ 0.057
	Second ring	0.035 ÷ 0.067
	Oil scraper ring	0.025 ÷ 0.057 (1) 0.025 ÷ 0.050 (2)
Play between piston pin bore and piston pin		0.004 ÷ 0.012
Play between small end bush bore and piston pin		0.007 ÷ 0.049
Radial clearance between main journal and main bearing		0.024 ÷ 0.056
Radial clearance between crank pins and connecting rod bearings		0.032 ÷ 0.064
Crankshaft end float		0.056 0.248

(*) Mondial piston (**) Borgo piston (1) Borgo ring (2) Goetze ring

(CONTINUED)

ASSEMBLY INTERFERENCE FITS AND CLEARANCES (CONTINUED)

STANDARD DIMENSIONS		ENGINE 30736
Radial clearance between camshaft journal and bearing	Front	0.053 ÷ 0.1
	Central - Rear	0.044 ÷ 0.085
Radial clearance between valve tappet and seat on camshaft support		0.025 ÷ 0.066
Radial clearance between valve stem and guide	Intake	0.013 ÷ 0.046
	Exhaust	0.03 ÷ 0.063
Interference valve guide and guide seat	Intake	0.032 ÷ 0.068
	Exhaust	

HEATING TEMPERATURES

PART	ENGINE 30736
Cylinder head heating up for valve seat assembly	100° ÷ 120 °C
Ring gear heating up for installation on flywheel	120° ÷ 140 °C

CHECKS AND ADJUSTMENTS

Timing data

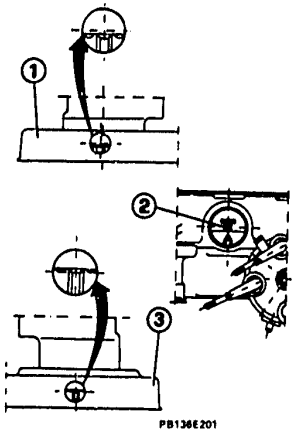

PB136E201

1 RH TIMING BELT REAR GUARD
2 MARK T ON ENGINE FLYWHEEL
3 LH TIMING BELT REAR GUARD

Unit: mm

TIMING DATA		ENGINE
		30750
Operating clearance between min. radius of cam and top of valve tappet	Intake	(*)
	Exhaust	(*)
Camshaft pulley timing reference position	RH pulley	(**)
	LH pulley	(***)

(*) Engine with hydraulic tappet (with takeup of play)
(**) Tooth with two grooves milled on RH camshaft pulley, corresponding to special hole on rear guard 1 of timing belt

(***) Tooth with two grooves milled on LH camshaft pulley, corresponding to special hole on rear guard 3 of timing belt

(CONTINUED)

CHECKS AND ADJUSTMENTS
TIMING DATA (continued)

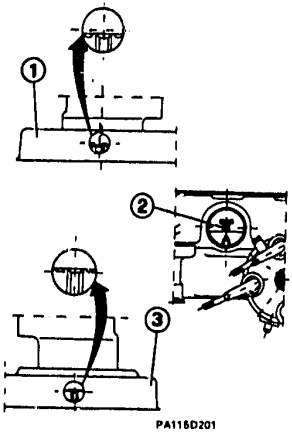

PA118D201

1 RIGHT TIMING BELT REAR COVER
2 NOTCH T ON ENGINE FLYWHEEL
3 LEFT TIMING BELT REAR COVER

Unit of measurement mm

TIMING DATA		ENGINE 30736
Backlash between lower cam radius and valve tappet crown	Intake	(*)
	Exhaust	(*)
Camshaft pulley timing reference position	Right sprocket	(**)
	Left sprocket	(***)

(*) Engine with hydraulic tappets (with play taken up)
(**) Tooth with two grooves on the right camshaft sprocket corresponding to the hole on rear cover 1 of the timing belt

(***) Tooth with two grooves on the left camshaft sprocket corresponding to the hole on rear cover 3 of the timing belt

CHECKS AND ADJUSTMENTS (continued)

Valve opening and closing angle check

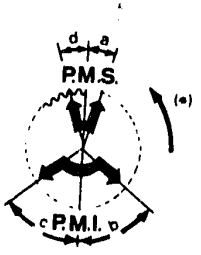

PA116D201

(*) Crankshaft anticlockwise rotation direction seen from engine flywheel-side

VALVE OPENING AND CLOSING ANGLE CHECK			ENGINE	
			30750	30736
Intake	Opening (before T.D.C.)	"a"	30°	30°
	Closing (after B.D.C.)	"b"	84°	84°
Exhaust	Opening (before B.D.C.)	"c"	68°	68°
	Closing (after T.D.C.)	"d"	34°	34°

FLUIDS AND LUBRICANTS

APPLICATION	TYPE	DENOMINATION	Q.TY
Engine (sump and filter) for periodical replacement	Oil.	AGIP NUOVO SINT 2000 10W/40	3,6 kg (4,0 l)
Engine (sump, filter, manifolds and distribution tanks)		IP SINTIAX Motor Oil 10W/40 SELENIA SPECIAL FORMULA ALFA ROMEO 10W/40	4,1 kg (4,6 l)

SEALANTS AND FIXING AGENTS

APPLICATION	TYPE	DENOMINATION	Q.TY
Engine oil sump gasket, cylinder block-side	MASTIC	DOW CORNING Silastik 732 RTV	-
Cylinder head and cylinder block water circulation plugs (1)	MASTIC	LOCTITE 601 (green)	-

(1) Before the application, eliminate any trace of the old fixing agent and degrease all surfaces with trichloroethylene or chlorothene.

ABRASIVES

APPLICATION	TYPE	DENOMINATION	Q.TY
Valve and valve seat regrindinggi	ABRASIVE	SIPAL AREXONS Carbosilicium for valves	-

TIGHTENING TORQUES

Unit of measurement Nm (Kgm)

PART		ENGINE 30750	ENGINE 30736
Rear and front cover to cylinder block fixing bolts		19 ÷ 24 (1.9 ÷ 2.4)	
Sprocket to camshaft fixing bolt (in oil)		63 ÷ 70 (6.4 ÷ 7.1)	
Main bearing caps to main journals fixing bolts (in oil)		66 ÷ 73 (6.7 ÷ 7.4)	
Main bearing caps to cylinder block retaining bolts (in oil)		40 ÷ 49 (4.1 ÷ 5)	
Flywheel to crankshaft fixing bolts (in oil)		94 ÷ 105 (9.6 ÷ 10.7)	
Big end bearing caps fixing bolts		43 ÷ 48 (4.4 ÷ 4.9)	
Crankshaft front pulley fixing nut		118 ÷ 144 (12 ÷ 14.7)	
Axle shafts to differential shafts union bolts (in oil)		30 ÷ 35 (3.0 ÷ 3.5)	
Belt tensioner to cylinder block fixing nut	With engine cold	37 ÷ 46 (3.8 ÷ 4.7)	
	With engine hot	29 ÷ 35 (3 ÷ 3.6)	
Pressure sensor for engine oil minimum pressure warning light		33 ÷ 41 (3.4 ÷ 4.2)	
Engine front crossmember and stabilizer bar bracket to body work fixing bolt		66.5 ÷ 83.3 (6.8 ÷ 8.5)	
Stabilizer bar to cross member fixing screws		14.7 ÷ 23.5 (1.5 ÷ 2.4)	
Cylinder head to cylinder block fixing screws		81 ÷ 87 (8.3 ÷ 8.9) (1)	

(1) If a torque wrench is used wit extension arm N° 1.822.010.000 (A 5.0198), positioned as shown in figure, the torque value becomes:

- with a 300 mm arm torque wrench 57 ÷ 62 Nm (5.8 ÷ 6.3 Kgm)
- with a 400 mm arm torque wrench 62 ÷ 67 Nm (6.3 ÷ 6.8 Kgm)

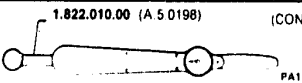

(CONTINUED)

TIGHTENING TORQUES (Continued)

Unit of measurement Nm (Kgm)

PART	ENGINE	
	30750	30736
Camshaft support to cylinder head fixing screws	19 ÷ 24 (1.9 ÷ 2.4)	
Water inlet union fixing screws	19 ÷ 24 (1.9 ÷ 2.4)	
Oil pump to engine rear cover fixing scres (nuts)	19 ÷ 24 (1.9 ÷ 2.4)	
Coolant temperature transmitter	15 (1.5)	
Oil pump body to oil pump support fixing screws	8 ÷ 10 (0.8 ÷ 1)	
Water pump to cylinder block fixing screws	19 ÷ 24 (1.9 ÷ 2.4)	
Intake manifold nuts	19 ÷ 24 (1.9 ÷ 2.4)	
Thermal contact on right cylinder head	33 ÷ 41 (3.4 ÷ 4.2)	
Spark plug tightening	25 ÷ 34 (2.5 ÷ 3.5)	
Engine-gearbox/differential unit fixing nuts	39 ÷ 48 (4 ÷ 4.9)	
Front crossmeamber to support retaining bolts	53 ÷ 85 (5.4 ÷ 8.7)	
Hose union to clutch control pipe	15 ÷ 19 (1.5 ÷ 1.9)	

SPECIFIC TOOLS

1.820.012.000 (A.2.0195)	Base for cylinder head support	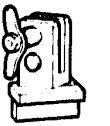 PA138A101
1.820.016.000 (A.2.0226)	Yoke for cylinder head supporting tool	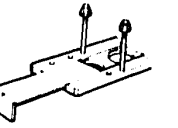 PA138A102
1.821.001.000 (A.3.0103/010)	Yoke to remove and refit valves	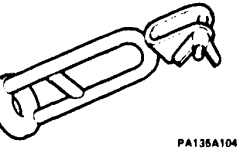 PA138A104
1.821.053.000 (A.3.0311)	Puller for valve guides	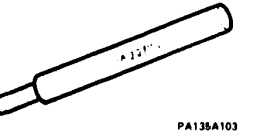 PA138A103

1.821.054.000 (A.3.0312)	Puller for intake valve guide	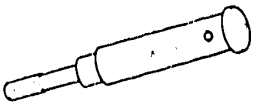 PA121D201
1.821.055.000 (A.3.0314)	Driver for camshaft oil seals	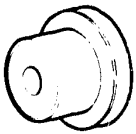 PA121D202
1.821.056.000 (A.3.0321)	Support for removing and fitting valves	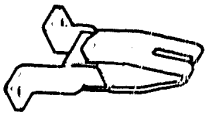 PA136A104
1.821.058.000 (A.3.0324)	Lever for removing and refitting valves	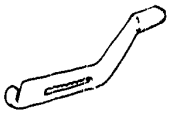 PA136A103

⇩

1.821.063.000 (A.3.0337)	Driver for crankshaft rear oil seal	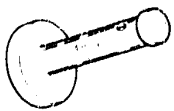 PA137A101
1.821.064.000 (A.3.0338)	Driver for crankshaft front oil seal	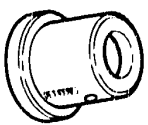 PA137A102
1.821.087.000 (A.3.0402)	Caliper-type puller ⌀ 14 20 mm for crankshaft bush	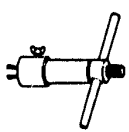 PA121D203
1.821.104.000 (A.3.0450)	Driver for crankshaft rear bush	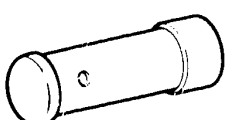 PA121D204

1.821.110.000 (A.3.0469)	Driver for intake valve guide seals	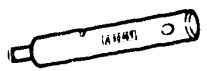 PA122D201
1.822.008.000 (A.5.0195)	Toothed wrench for locking camshaft pulley	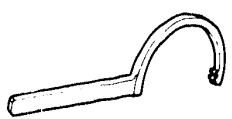 PA122D202
1.822.010.000 (A.5.0198)	Wrench for 17 mm cylinder head screws	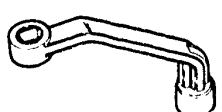 PA122D203
1.828.003.000 (U.6.0007)	Reamer ∅ 8,013 mm for valve guide	 PA122D204

TCS

ENGINE WITH ELECTRONIC INJECTION (LE3 - Jetronic)

for 1.4 IE

- TECHNICAL CHARACTERISTICS AND SPECIFICATIONS

TECHNICAL CHARACTERISTICS AND SPECIFICATIONS

ENGINE SPECIFICATIONS ..... 01 - 148
ENGINE BLOCK ..... 01 - 149
CRANKSHAFT ..... 01 - 150
MAIN HALF BEARINGS ..... 01 - 152
THRUST HALF-RINGS ..... 01 - 152
FLYWHEEL ..... 01 - 153
PISTONS ..... 01 - 154
GUDGEON PINS ..... 01 - 155
COMPRESSION RINGS ..... 01 - 155
CONNECTING ROD ..... 01 - 156
CONNECTING ROD HALF BEARING ..... 01 - 156
CYLINDER HEADS ..... 01 - 157
VALVES ..... 01 - 158
VALVE SEAT SKIMMING DIMENSIONS ..... 01 - 158
SPRINGS ..... 01 - 159
CAMSHAFT SUPPORT AND VALVE TAPPETS ..... 01 - 159

TECHNICAL CHARACTERISTICS AND SPECIFICATIONS

ENGINE SPECIFICATIONS

ENGINE		30755
Cycle		Otto / 4 stroke
Number of cylinder		4 horizontally opposed
Fuel supply system		electronic injection
Bore - stroke Displacement	mm cm³	80 × 67.2 1351
Combustion chamber volume	cm³	39.7
Compression ratio		9.5:1
Power DIN	kW (Hp)	64 (87) at 6000 r.p.m.
Maximum torque DIN	Nm (Kgm)	107.9 (11) at 3200 r.p.m.

(Δ) Version with catalytic converter.

ENGINE BLOCK

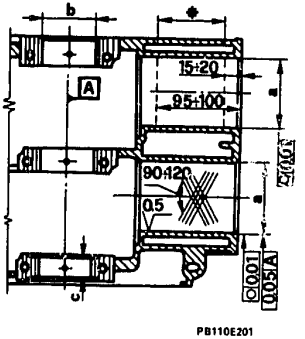

* Area for dimensional check

STANDARD DIMENSIONS			ENGINE 30755 CYLINDERS 1-3	ENGINE 30755 CYLINDERS 2-4
Cylinder liner diameter "a" mm	Standard	Cl. A	80.010 to 80.020	80.000 to 80.010
		Cl. B	80.020 to 80.030	80.010 to 80.020
		Cl. C	80.030 to 80.040	80.020 to 80.030
		Cl. D	80.040 to 80.050	80.030 to 80.040
		Cl. E	80.050 to 80.060	80.040 to 80.050
	Oversize	1st	80.210 to 80.220	80.200 to 80.210
		2nd	80.410 to 80.420	80.400 to 80.410
		3rd	80.610 to 80.620	80.600 to 80.610
Max. deviation from perpendicular between axis of cylinder lining and axis of main bearings mm			0.05	
Cylinder liner ovality and taper limit mm	Design		0.01	
	Max		0.02	
Cylinder liner surface roughness µm			(0.5 to 1)	
Cylinder liner grinding angle			90° to 120°	
Main bearing bore diameter "b" mm			63.663 to 63.673	
Width of rear main bearing shoulder "c" mm			23.68 to 23.73	

CRANKSHAFT

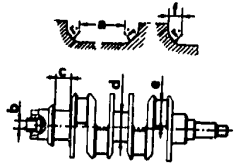

FLYWHEEL DOWEL PIN
GEAR TOOTH

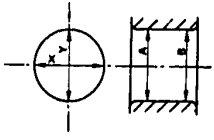

OVALITY X-Y
TAPER A B

PB112E201

Unit: mm

STANDARD DIMENSIONS		ENGINE 30755
Crankpin diameter "d"	Blue	49.984 to 49.992
	Red	49.992 to 50.000
Main journal diameter "e"		59.944 to 59.957
Length of rear main journal "c"		28.51 to 28.55
Radius R	Front main journals	2.8 to 3
	Central main journals	1.8 to 2
	Rear main journals	1.5 to 1.7
	Crankpins	3.3 to 3.5
Length of radiused section "f"	Front main journal	
Length of cylindrical sections "a"	Central main journals	24.05 to 24.15
	Rear main journals	24.22 to 24.32

(CONTINUED)

CRANKSHAFT (CONTINUED)

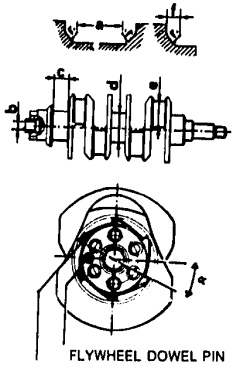

Unit: mm

STANDARD DIMENSIONS		ENGINE 30755
Roughness of main journal and crankpin μm		0.16
Ovality X-Y and taper A-B of main journal and crankpin	Design	0.006
	Max.	0.02
Max. out-of-parallel between main journals and crankpins		0.015
Max. eccentricity between main journals		0.02
Max. deviation between axes of the two pairs of crankpins and axis of main journals		0.25
Max. error of perpendicularity between support planes of shoulder rings and main journals		0,03
Diameter of crankshaft rear bushing "b"		16.083 to 16.087
Orientation of crankshaft rear gear "α" (Oil pump/ignition distributor drive)		30° ± 15'

MAIN HALF BEARINGS



PB116E201

Unit: mm

STANDARD DIMENSIONS	ENGINE
	30755
Thickness "a"	1.833 to 1.839

THRUST HALF RINGS

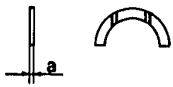

PB116E202

Unit: mm

STANDARD DIMENSIONS	ENGINE
	30755
Thickness "a"	2.311 to 2.362

FLYWHEEL

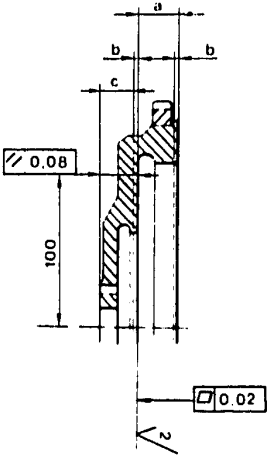

PB118E201

Unit: mm

STANDARD DIMENSIONS		ENGINE 30755
Grinding dimensions	a	24.0 to 24.2
	b	≤ 0.2
	c	21.15 to 21.35
Max. out-of-parallel between support plane of driven plate and support plane of flywheel to crankshaft (measured on a radius of 100 mm)		0.08
Max. flatness error of driven plate support plane		0.02
Roughness of driven plate support	µm	2

Note: The removal of material, dimension "b", must be the same both on the support plane of the driven plate and on the support plane of the clutch body, in order not to alter dimension "a". Dimension "c" must not be less than the indicated value.

PISTONS

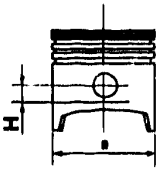

PB120E201

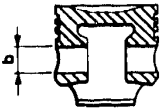

PB120E202

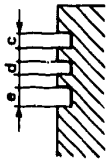

PB120E203

Unit: mm

STANDARD DIMENSIONS			ENGINE 30755	
			Mondial (1)	Borgo (2)
Diameter of piston "a" (measured at right angles to gudgeon pin bore at distance "H" of gudgeon pin bore axis)	Standard	Class A (Blue)	79.960 to 79.970	
		Class B (Pink)	79.970 to 79.980	
		Class C (Green)	79.980 to 79.990	
		Class D (Yellow)	79.990 to 80.000	
		Class E (White)	80.000 to 80.010	
	Oversize	1st	80.154 to 80.170	80.150 to 80.170
		2nd	80.354 to 80.370	80.350 to 80.370
		3rd	80.554 to 80.570	80.550 to 80.570
Groove height of first compression ring "c"			1.525 to 1.545	
Groove height of second compression ring "d"			1.775 to 1.795	
Groove height of oil scaper ring "e"			4.015 to 4.035	
Diameter of gudgeon pin bore in piston "b"			21.004 to 21.008	

(1) H = 11.5 mm (2) H = 16.8 to 17 mm

GUDGEON PINS

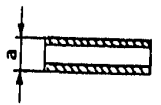

PB122E201

Unit: mm

STANDARD DIMENSIONS	ENGINE 30755
Diameter of gudgeon pin "a"	20.966 to 21.000
Gudgeon pin - piston clearance	0.004 to 0.012

COMPRESSION RINGS

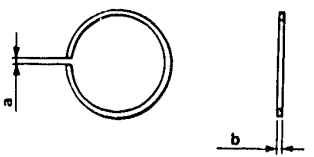

PB122E202

Unit: mm

STANDARD DIMENSIONS		ENGINE 30755
Ring thickness "b"	First ring	1.478 to 1.490
	Second ring	1.728 to 1.740
	Oil scraper ring	3.978 to 3.990
Ring gap (1) "a"	First ring	0.30 to 0.45
	Second ring	0.30 to 0.45
	Oil scraper ring	0.25 to 0.40
	Limit gap for each ring	1

(1) To be measured inside ring gauge or cylinder liner bore

CONNECTING ROD



PB124E201

Unit: mm

STANDARD DIMENSIONS	ENGINE 30755
Diameter of conn. rod small end bushing bore "a"	21.007 to 21.015
Internal diam. of conn. rod big end "b"	53.696 to 53.708

CONN. ROD HALF BEARING



PB124E202

Unit: mm

STANDARD DIMENSIONS		ENGINES 30755
Thickness of conn. rod half bearing "a"	Blue	1.830 to 1.836
	Red	1.826 to 1.832

CYLINDER HEADS

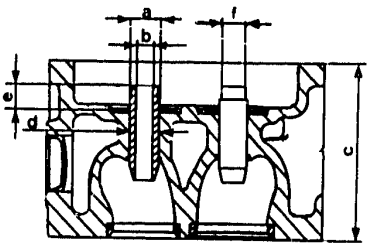

PB125E201

Unit: mm

STANDARD DIMENSIONS	ENGINE 30755
Diam. of valve guide seat "d"	13.000 to 13.016
Ext. diam. of valve guide "a"	13.050 to 13.068
Int. diam. of valve guide (bore) "b"	8.013 to 8.031
Diam. of seat for valve stem cap "f"	10.85 to 10.95
Valve guide protrusion "e"	9.3 to 9.5
Min. permissible cylinder head protrusion after skimming "c" (1)	77.676 to 77.750
Max. out-of-parallel between cylinder head faces	0.05
Max. out-of-flatness for lower head face	0.03
Roughness of lower head face μm	1.6

(1) The skimming of the cylinder heads with hemispherical combustion chamber must be carried out on both cylinder heads of engine.

VALVES

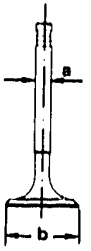

PB127E201

Unit: mm

STANDARD DIMENSIONS		ENGINE 30755
Valve stem diameter "a"	Intake	7.985 to 8.000
	Exhaust	7.968 to 7.983
Valve head diameter "b"	Intake	39.700 to 39.990
	Exhaust	33.000 to 33.200

VALVE SEAT SKIMMING DIMENSIONS

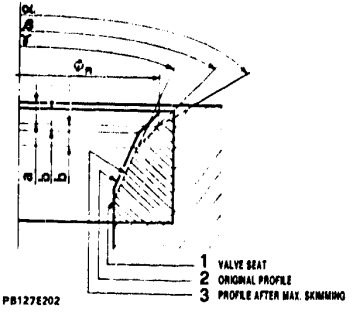

PB127E202

Unit: mm

STANDARD DIMENSIONS		ENGINE 30755
Reference diameter "ØR"	Intake	39.0
	Exhaust	31.9
Skimming limit of upper section of valve seat "a"	Intake	2.9
	Exhaust	
Skimming limit of valve seat contact section "b"	Intake	1.07 ÷ 1.37
	Exhaust	1.26 ÷ 1.56
Valve seat upper section limit taper "α"	Intake	120°
	Exhaust	
Valve seat contact section limit taper "β"		90° ÷ 90°30'
Valve seat internal section limit taper "γ"	Intake	70°
	Exhaust	30°

SPRINGS



PB129E201

Unit mm

STANDARD DIMENSIONS			ENGINE 30755
Length of spring with valve open "a"	Outer spring	mm	23.25
	Inner spring	mm	21.25
Spring load at length "a"	Outer spring N	(kg)	438.5 ± 14 (44.7 ± 1.4)
	Inner spring N	(kg)	207 ± 7 (21.10 ± 0.70)
Free length	Outer ring N	(kg)	45
	Inner ring N	(kg)	44

CAMSHAFT SUPPORT AND VALVE TAPPETS

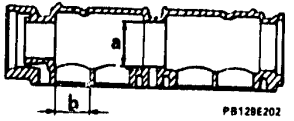

PB129E202

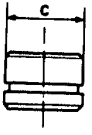

PB129E203

Unit mm

STANDARD DIMENSIONS		ENGINE 30755
Diameter of camshaft journal seat "a"	Front	35.015 to 35.040
	Centre	48.000 to 48.025
	Rear	49.200 to 49.225
Diameter of valve tappet seat "b"		35.000 to 35.025
Diameter of tappet "c"		34.959 to 34.975

TCS

ENGINE WITH ELECTRONIC INJECTION (LE3 - Jetronic) For 1.4 iE

- TECHNICAL CHARACTERISTICS AND SPECIFICATIONS (continued)
- SPECIFIC TOOLS

TECHNICAL CHARACTERISTICS AND SPECIFICATIONS

CAMSHAFT ..... 01 - 160
ASSEMBLY INTERFERENCE FITS AND CLEARANCES ..... 01 - 161
HEATING TEMPERATURES ..... 01 - 162
CHECKS AND ADJUSTMENT ..... 01 - 163
Timing data ..... 01 - 163
Check on valve opening and closing angles ..... 01 - 164
FLUIDS AND LUBRICANTS ..... 01 - 165
SEALANTS AND FIXING AGENTS ..... 01 - 165
ABRASIVES ..... 01 - 165
TIGHTENING TORQUES ..... 01 - 166

SPECIFIC TOOLS

SPECIFIC TOOLS ..... 01 - 168

CAMSHAFT

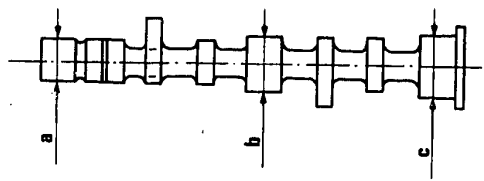

PB131E201

Unit: mm

STANDARD DIMENSIONS		ENGINES
		30755
Height of cams	Intake	9.8
	Exhaust	9.00
Diameter of camshaft journal	Front "a"	34.940 to 34.962
	Centre "b"	47.940 to 47.956
	Rear "c"	49.140 to 49.156

ASSEMBLY INTERFERENCE FITS AND CLEARANCES

Unit: Nm (Kgm)

STANDARD DIMENSIONS		ENGINE 30755
Clearance between liner and piston	Standard	0.04 to 0.06 (*) 0.03 to 0.05 (**)
	Oversize	0.04 to 0.066 (*) 0.03 to 0.056 (**)
End float between compression rings and seats	First ring	0.035 to 0.067
	Second ring	0.035 to 0.067
	Oil scraper ring	0.025 to 0.057
Clearance between piston bore and gudgeon pin		0.004 to 0.012
Clearance between small end bushing and gudgeon pin		0.007 to 0.049
Radial clearance between main journal and main bearing		0.028 to 0.063
Radial clearance between big end bearings and main journals		0.032 to 0.064

(CONTINUED)

ASSEMBLY INTERFERENCE FITS AND CLEARANCES (CONTINUED)

STANDARD DIMENSIONS		ENGINE 30755
Radial clearance between journal and camshaft seat	Front	0.053 to 0.100
	Centre - Rear	0.044 to 0.085
Radial clearance between valve tappet and seat on camshaft bearing		0.025 to 0.066
Radial clearance between valve stem and valve guide	Intake	0.013 to 0.046
	Exhaust	0.030 to 0.063
Interference fit between valve guide and valve guide seat		0.034 to 0.068

HEATING TEMPERATURES

COMPONENT	ENGINE 30755
Cylinder head temperature for fitting valve seats	100° to 120 °C
Starter ring gear temperature for shrinking on to flywheel	120° to 140 °C

CHECKS AND ADJUSTMENTS

Timing data

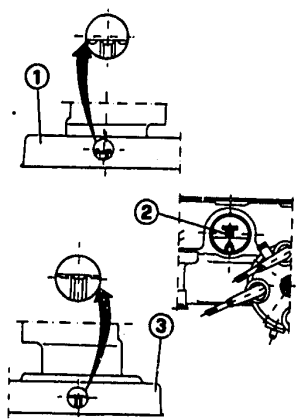

PB138E201

1 RH TIMING BELT REAR GUARD
2 MARK T ON ENGINE FLYWHEEL
3 LH TIMING BELT REAR GUARD

Unit: mm

TIMING DATA		ENGINE
		30755
Operating clearance between mean radius of cam and top of valve tappet	Intake	(*)
	Exhaust	(*)
Camshaft pulley timing refernce position	RH pulley	(**)
	LH pulley	(***)

(*) Engine with hydraulic tappet (with takeup of play)
(**) Tooth with two grooves milled on RH timing belt, corresponding to special hole on rear guard 1 of timing belt

(***) Tooth with two grooves milled on LH timing belt, corresponding to special hole on rear guard 3 of timing belt

CHECKS AND ADJUSTMENTS (Continued)

Check on valve opening and closing angles

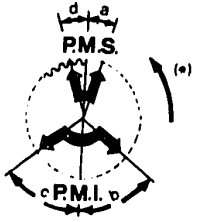

PB138E201

(*) Anti-clockwise crankshaft rotation, seen from flywheel side

CHECK ON VALVE OPENING AND CLOSING ANGLES			ENGINES
			30755
Intake	Opening (before TDC)	"a"	30°
	Closing (after BDC)	"b"	84°
Exhaust	Opening (before BDC)	"c"	68°
	Closing (after TDC)	"d"	34°

FLUIDS AND LUBRICANTS

APPLICATION	TYPE	DENOMINATION	Q.TY
Engine (sump and filter) for periodical replacement	OIL	AGIP NUOVO SINT 2000 10W/40	3,6 kg (4,0 l)
Engine (sump, filter, manifolds and distribution tanks)		IP SINTIAX Motor Oil 10W/40 SELENIA SPECIAL FORMULA ALFA ROMEO 10W/40	4,1 kg (4,6 l)

SEALANTS AND FIXING AGENTS

APPLICATION	TYPE	DENOMINATION	Q.TY
Engine oil sump gasket, cylinder block-side	MASTIC	DOW CORNING Silastik 732 RTV	-
Cylinder head and cylinder block water circulation plugs (1)	MASTIC	LOCTITE 601 (green)	-

(1) Before the application, eliminate any trace of the old fixing agent and degrease all surfaces with trichloroethylene or chlorothene.

ABRASIVES

APPLICATION	TYPE	DENOMINATION	Q.TY
Valve and valve seat regrindinggi	ABRASIVE	SIPAL AREXONS Carbosilicium for valves	-

TIGHTENING TORQUES

Unit of measurement: Nm (Kgm)

PART		ENGINE 30755
Rear and front cover to cylinder block fixing bolts		19 ÷ 24 (1.9 ÷ 2.4)
Sprocket to camshaft fixing bolt (in oil)		63 ÷ 70 (6.4 ÷ 7.1)
Main bearing caps to main journals fixing bolts (in oil)		66 ÷ 73 (6.7 ÷ 7.4)
Main bearing caps to cylinder block retaining bolts (in oil)		40 ÷ 49 (4.1 ÷ 5)
Flywheel to crankshaft fixing bolts (in oil)		94 ÷ 105 (9.6 ÷ 10.7)
Big end bearing caps fixing bolts		43 ÷ 48 (4.4 ÷ 4.9)
Crankshaft front pulley fixing nut		118 ÷ 144 (12 ÷ 14.7)
Axle shafts to differential shafts union bolts (in oil)		30 ÷ 35 (3.0 ÷ 3.5)
Belt tensioner to cylinder block fixing nut	With engine cold	37 ÷ 46 (3.8 ÷ 4.7)
	With engine hot	29 ÷ 35 (3 ÷ 3.6)
Pressure sensor for engine oil minimum pressure warning light		33 ÷ 41 (3.4 ÷ 4.2)
Engine front crossmember and stabilizer bar bracket to body work fixing bolt		66.5 ÷ 83.3 (6.8 ÷ 8.5)
Stabilizer bar to cross member fixing screws		14.7 ÷ 23.5 (1.5 ÷ 2.4)
Cylinder head to cylinder block fixing screws		81 ÷ 87 (8.3 ÷ 8.9) (1)

(1) If a torque wrench is used wit extension arm N° 1.822.010.000 (A.5.0198), positioned as shown in figure, the torque value becomes:

- with a 300 mm arm torque wrench 57 ÷ 62 Nm (5.8 ÷ 6.3 Kgm)
- with a 400 mm arm torque wrench 62 ÷ 67 Nm (6.3 ÷ 6.8 Kgm)

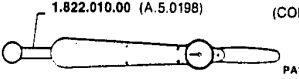

PA133A101

(CONTINUED)

TIGHTENING TORQUES (Continued)

Unit of measurement: Nm (Kgm)

PART	ENGINE 30755
Camshaft support to cylinder head fixing screws	19 ÷ 24 (1.9 ÷ 2.4)
Water inlet union fixing screws	19 ÷ 24 (1.9 ÷ 2.4)
Oil pump to engine rear cover fixing scres (nuts)	19 ÷ 24 (1.9 ÷ 2.4)
Coolant temperature transmitter	15 (1.5)
Oil pump body to oil pump support fixing screws	8 ÷ 10 (0.8 ÷ 1)
Water pump to cylinder block fixing screws	19 ÷ 24 (1.9 ÷ 2.4)
Intake manifold nuts	19 ÷ 24 (1.9 ÷ 2.4)
Thermal contact on right cylinder head	33 ÷ 41 (3.4 ÷ 4.2)
Spark plug tightening	25 ÷ 34 (2.5 ÷ 3.5)
Engine-gearbox/differential unit fixing nuts	39 ÷ 48 (4 ÷ 4.9)
Front crossmeamber to support retaining bolts	53 ÷ 85 (5.4 ÷ 8.7)
Hose union to clutch control pipe	15 ÷ 19 (1.5 ÷ 1.9)

SPECIFIC TOOLS

1.820.012.000 (A.2.0195)	Base for cylinder head support	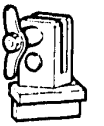 PA135A101
1.820.016.000 (A.2.0226)	Yoke for cylinder head supporting tool	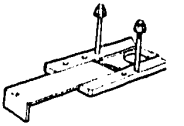 PA135A102
1.821.001.000 (A.3.0103/010)	Yoke to remove and refit valves	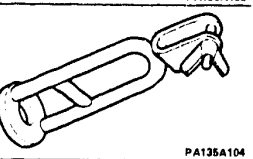 PA135A104
1.821.053.000 (A.3.0311)	Puller for valve guides	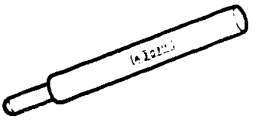 PA135A103

⇩

1.821.054.000 (A.3.0312)	Puller for intake valve guide	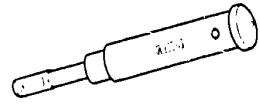 PA121D201
1.821.055.000 (A.3.0314)	Driver for camshaft oil seals	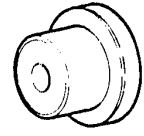 PA121D202
1.821.056.000 (A.3.0321)	Support for removing and fitting valves	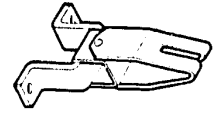 PA136A104
1.821.058.000 (A.3.0324)	Lever for removing and refitting valves	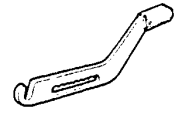 PA136A103



1.821.063.000 (A.3.0337)	Driver for crankshaft rear oil seal	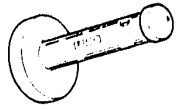 PA137A101
1.821.064.000 (A.3.0338)	Driver for crankshaft front oil seal	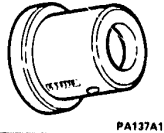 PA137A102
1.821.087.000 (A.3.0402)	Caliper-type puller Ø 14 ÷ 20 mm for crankshaft bush	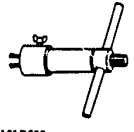 PA121D203
1.821.104.000 (A.3.0450)	Driver for crankshaft rear bush	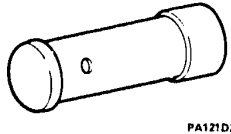 PA121D204

1.821.110.000 (A.3.0469)	Driver for intake valve guide seals	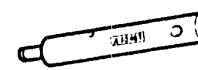 PA122D201
1.822.008.000 (A.5.0195)	Toothed wrench for locking camshaft pulley	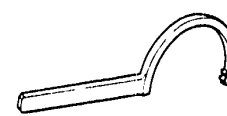 PA122D202
1.822.010.000 (A.5.0198)	Wrench for 17 mm cylinder head screws	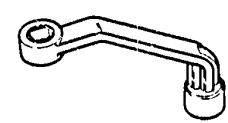 PA122D203
1.828.003.000 (U.6.0007)	Reamer Ø 8,013 mm for valve guide	 PA122D204

MICROFICHE INDEX

Microfiche 5/15

Group 01 - Electronic - injection engine (16 valves)

ENGINE - TRANSMISSION UNIT, REMOVAL AND REPLACEMENT ..... 01 - A

ENGINE - TRANSMISSION UNIT, REMOVAL AND REPLACEMENT (continued), ENGINE/GEARBOX - DIFFERENTIAL SEPARATION AND UNION ..... 01 - B

PRELIMINARY DISMANTLING OPERATIONS, ENGINE DISMANTLING AND REASSEMBLY ..... 01 - C

ENGINE DISMANTLING AND REASSEMBLY (continued), CYLINDER HEAD OVERHAUL ..... 01 - D

BLOCK CHECKS ..... 01 - E

ENGINE REASSEMBLY ..... 01 - F

ENGINE REASSEMBLY (continued), REMOVING AND REFITTING CYLINDER HEAD WITH ENGINE ON VEHICLE ..... 01 - G

REMOVING AND REFITTING CYLINDER HEADS WITH ENGINE ON VEHICLE (continued), FLOWTESTING ..... 01 - H

TSN ..... 01 - I

TSN (continued), SPECIAL TOOLS ..... 01 - L

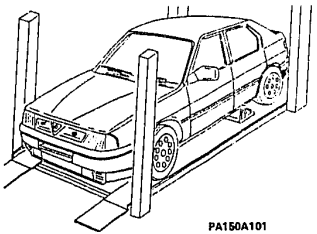

PA150A101

ELECTRONIC-INJECTION ENGINE (16 VALVES)

- ENGINE-TRANSMISSION UNIT, REMOVAL AND REPLACEMENT

ENGINE-TRANSMISSION UNIT, REMOVAL AND REPLACEMENT ..... 01 - 1

ENGINE-TRANSMISSION UNIT REMOVAL AND REPLACEMENT

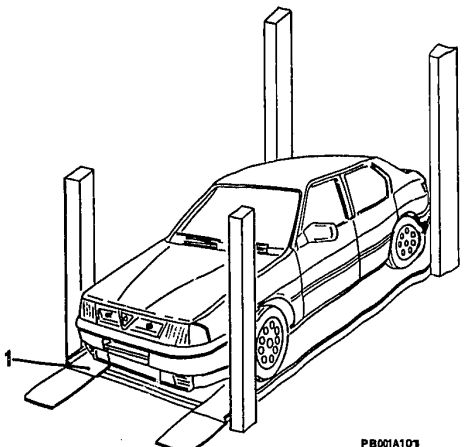

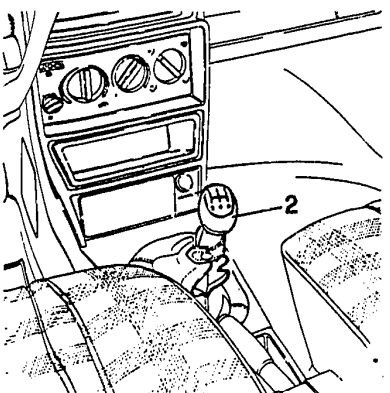

1. Set vehicle on lift.

2. Slide off gear lever knob.

ENGINE-TRANSMISSION UNIT REMOVAL AND REPLACEMENT (Continued)

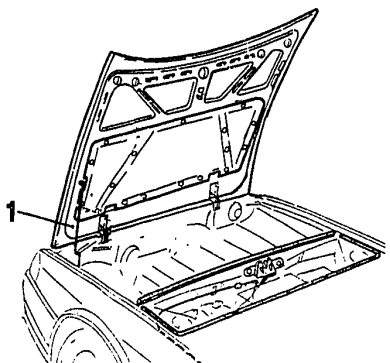

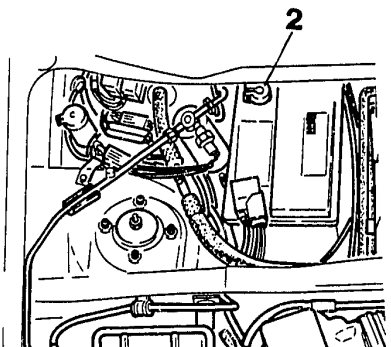

PA152A101

1. Remove the hood (see GR. 56).

2. Disconnect the battery negative lead.

ENGINE-TRANSMISSION UNIT REMOVAL AND REPLACEMENT (Continued)

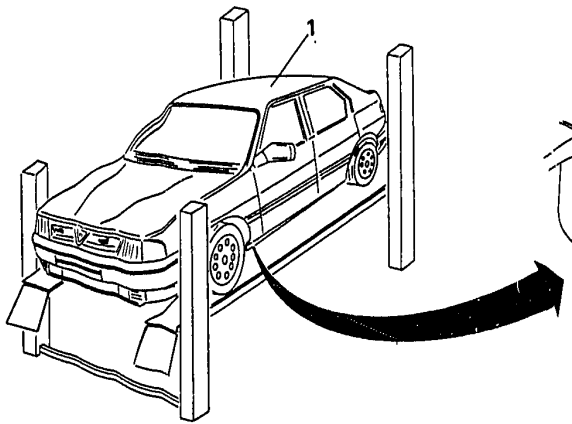

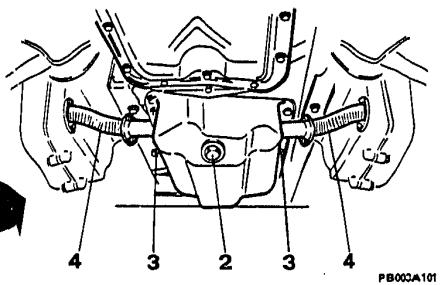

1. Raise the vehicle.
2. Drain the engine oil (see UN. 00).
3. Drain the engine cooling system (see UN. 07).
4. Remove the two oil pipes from the heads.

ENGINE-TRANSMISSION UNIT REMOVAL AND REPLACEMENT (Continued)

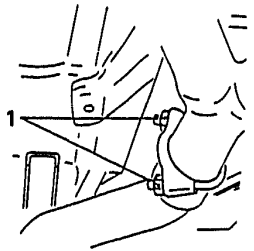

PB004A101

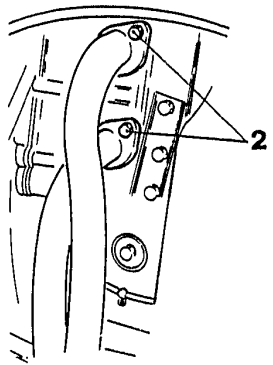

PA184A102

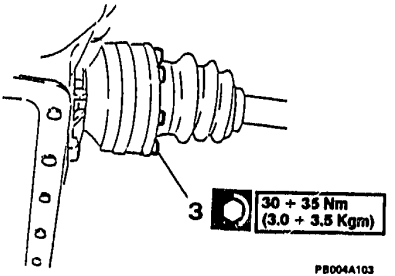

PB004A103

1. Slacken the exhaust clamp at the joint between the first and second exhaust system sections.
2. Disconnect the manifolds from the heads and remove the first exhaust section.
3. Disconect the drive shafts from the gearbox stubs.

ENGINE-TRANSMISSION UNIT REMOVAL AND REPLACEMENT (Continued)

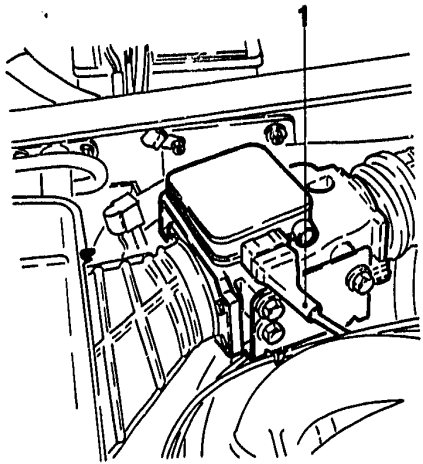

- Lower the vehicle.

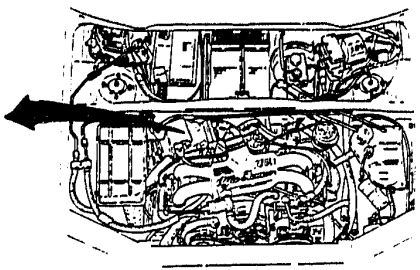

PB006A101

1. Disconnect the air flow meter connector.

ENGINE-TRANSMISSION UNIT REMOVAL AND REPLACEMENT (Continued)

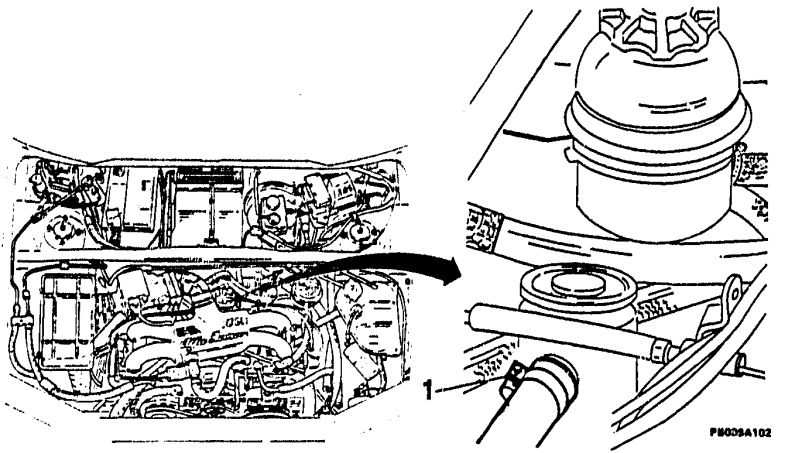

1. Slacken the clip on the blow-by pipe (separator end).

ENGINE-TRANSMISSION UNIT REMOVAL AND REPLACEMENT (Continued)

1. Slacken the corrugated pipe clip.
2. Unclip the air filter cover.
3. Undo the 3 air-flow meter screws.
4. Remove the air-flow meter, air filter and corrugated pipe.
5. Extract the cartridge and remove the air filter bracket by undoing the two retaining screws.
6. Remove the air-flow meter bracket and relative rubber spacers.

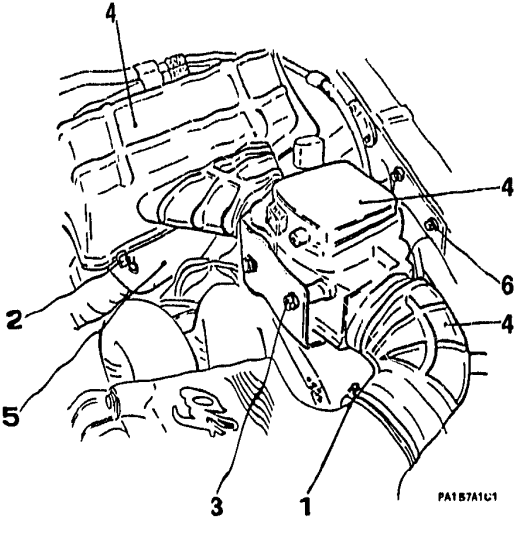

ENGINE-TRANSMISSION UNIT REMOVAL AND REPLACEMENT (Continued)

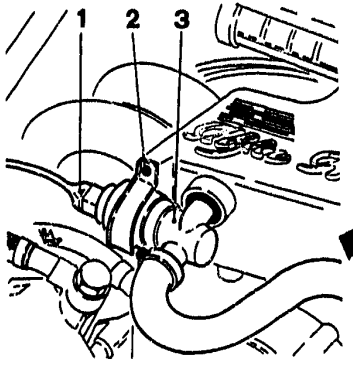

PB008A101

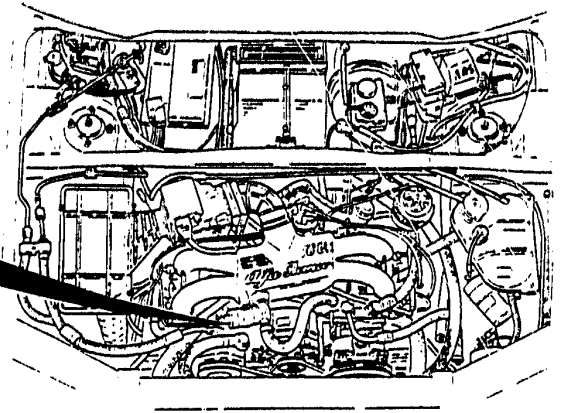

PB010A102

1. Disconnect the electric lead from the constant idling rate actuator.
2. Unscrew the retaining screw.
3. Remove the constant idle r.p.m. actuator.

ENGINE - TRANSMISSION UNIT REMOVAL AND REPLACEMENT (continued)

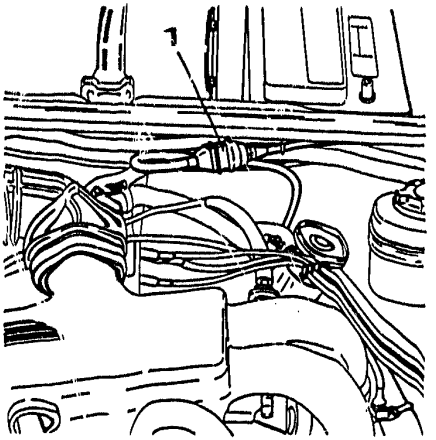

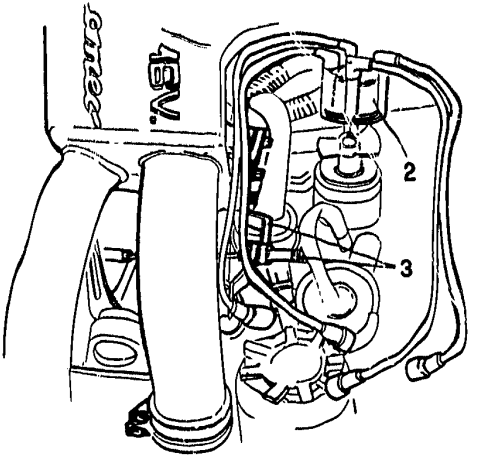

1. Disconnect the electrical connection from the r.p.m. and timing sensor and free the wiring from the clamps.
2. Remove the distributor cap and relative electrical wiring.
3. Remove the accelerator cable and relative support.

⇩

ENGINE-TRANSMISSION UNIT REMOVAL AND REPLACEMENT (Continued)

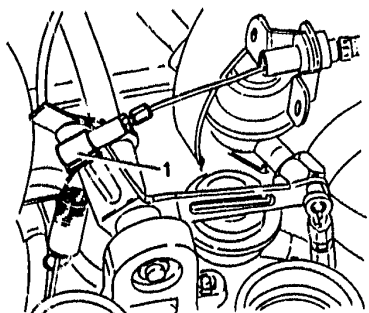

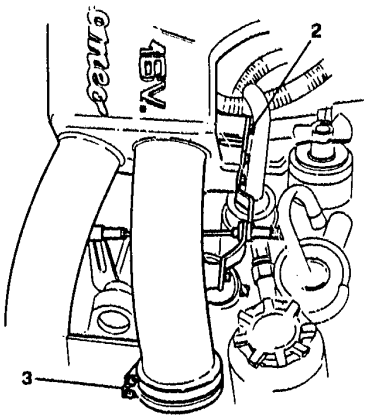

1. Withdraw the return spring for the accelerator adjusting pawl.
2. Remove the pressure regulator and impulse damper bracket.
3. Slacken the four lower clips and remove the air reservoir box.

ENGINE - TRANSMISSION UNIT REMOVAL AND REPLACEMENT (continued)

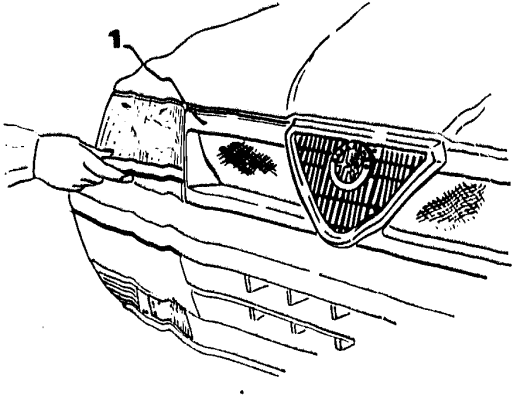

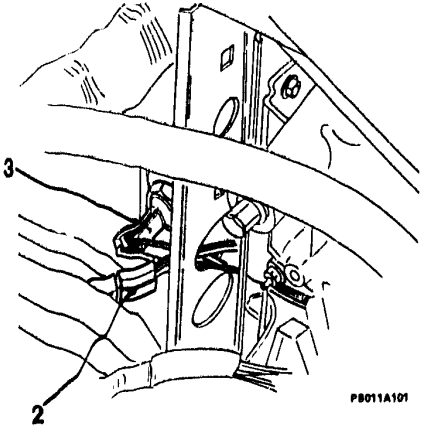

1. Remove the front facing (See GR. 75).
2. Disconnect the radiator electric fan electrical connection.
3. Disconnect the electric fan thermal contact connection.

ENGINE-TRANSMISSION UNIT REMOVAL AND REPLACEMENT (Continued)

1. Slacken the clip holding the cooling hose to the thermostat valve.
2. Slacken the clip holding the cooling hose to the water pump.
3. Slacken the clip holding the cooling hose to the header tank.

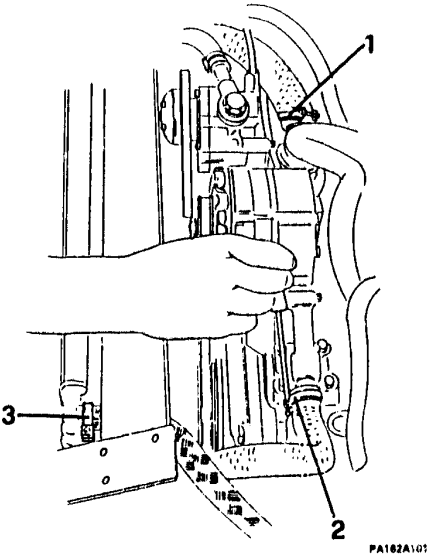

ENGINE - TRANSMISSION UNIT REMOVAL AND REPLACEMENT (continued)

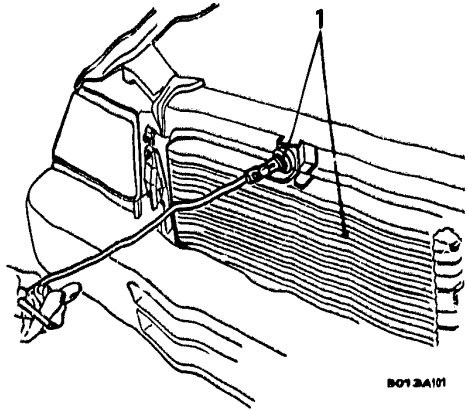

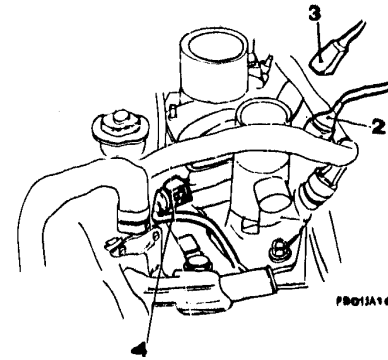

1. Unscrew the screw fastening the radiator and remove it.
2. Disconnect the electroinjector electrical leads.
3. Disconnect the the electric cable from the throttle valve MIN and MAX opening switch.
4. Disconnect the engine coolant temperature sensor lead

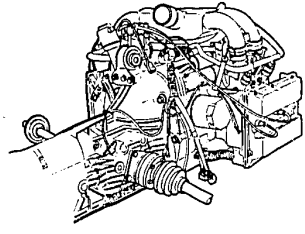

ELECTRONIC-INJECTION ENGINE (16 VALVES)

- ENGINE-TRANSMISSION UNIT, REMOVAL AND REPLACEMENT (continued)
- ENGINE/GEARBOX-DIFFERENTIAL SEPARATION AND UNION

ENGINE-TRANSMISSION UNIT, REMOVAL AND REPLACEMENT ..... 01 - 14
CYLINDER COMPRESSION TEST ..... 01 - 28

ENGINE/GEARBOX-DIFFERENTIAL SEPARATION AND UNION ..... 01 - 29

ENGINE - TRANSMISSION UNIT REMOVAL AND REPLACEMENT (continued)

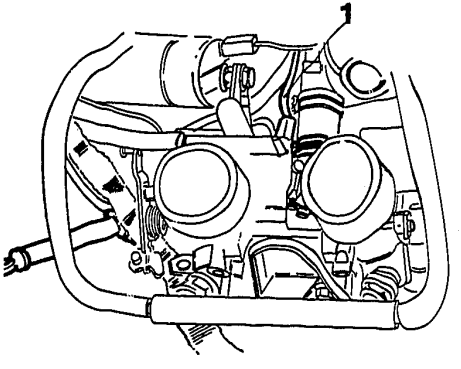

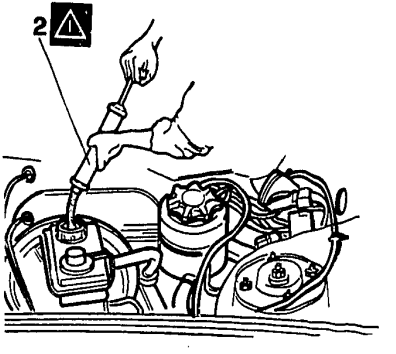

PB014A101

1. Disconnect the coolant temperature sender lead.

2. Draw off the clutch/brake fluid up to the level below the clutch pump suction height.

ENGINE-TRANSMISSION UNIT REMOVAL AND REPLACEMENT (Continued)

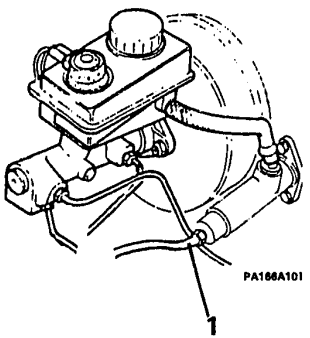

PA166A101

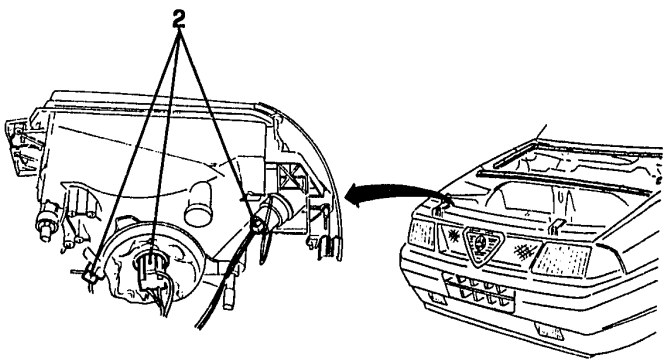

PA166A102

1. Unscrew the union from the clutch master cylinder and remove the pipe from the auxiliary bay.

2. Disconnect the electric leads from the front light assemblies.

ENGINE-TRANSMISSION UNIT REMOVAL AND REPLACEMENT (Continued)

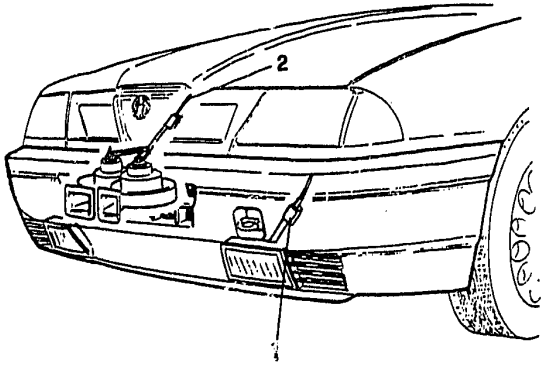

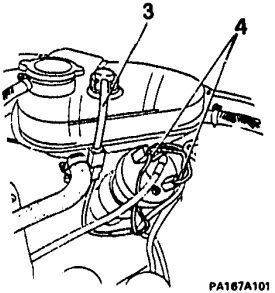

1. Disconnect the leads from the fog-lamps.
2. Disconnect the leads from the horns.
- Disconnect the electric cooling fan sensor switch.
3. Disconnect the lead from the flexible joint of the cooling liquid level sensor.
4. Disconnect the LT leads from the coil.



ENGINE-TRANSMISSION UNIT REMOVAL AND REPLACEMENT (Continued)

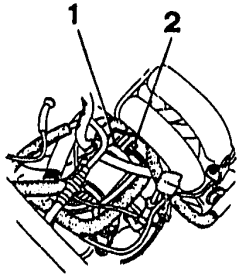

PB017A101

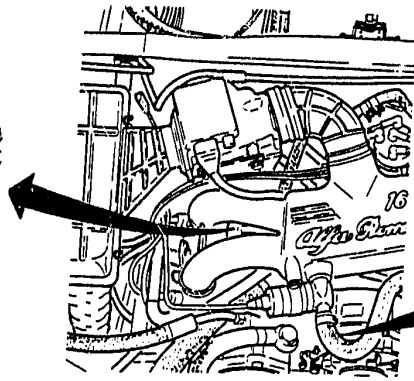

PB017A102

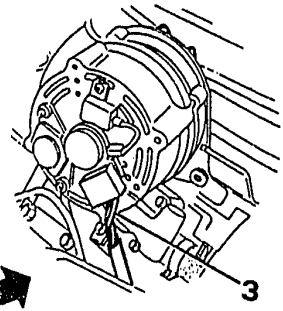

PB017A103

1. Disconnect the starter motor excitor cable from the mobile connector.
2. Disconnect the starter motor power cable from the terminal on the motor.
- Disconnect the oil pressure sensor lead.
3. Sconnettere il cavo del connettore alternatore.

ENGINE-TRANSMISSION UNIT REMOVAL AND REPLACEMENT (Continued)

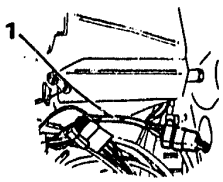

PA169A101

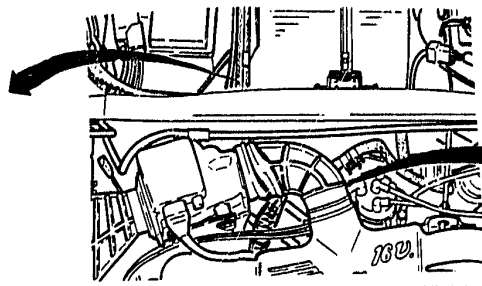
PA169A102

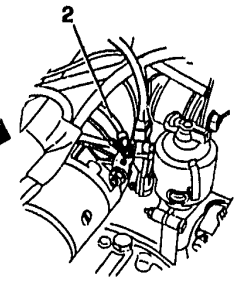

PA169A103

1. Disconnect the speedometer cable drive.
2. Disconnect the earthing cables, unscrewing the nuts on the engine block.

- Free all cabling from the cable ties and keep them away from the engine so as not to hamper its removal.

ENGINE-TRANSMISSION UNIT REMOVAL AND REPLACEMENT (Continued)

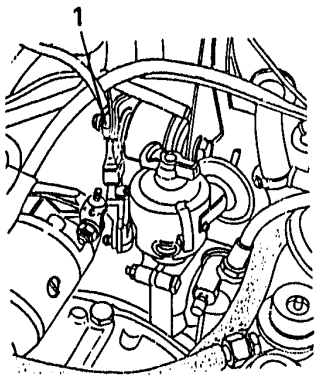

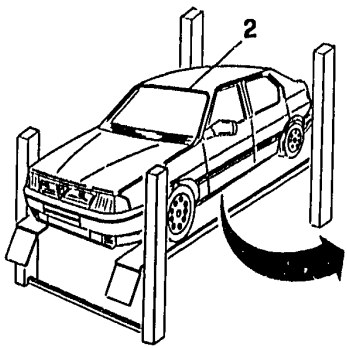

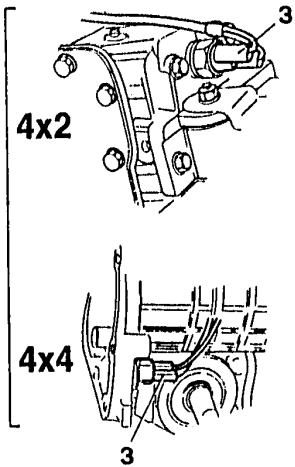

1. Slacken the bolt holding the central engine mounting to the body, without removing it.
2. Raise the vehicle.
3. Disconect the reverse-gear light lead from the switch on the gearbox.

ENGINE - TRANSMISSION UNIT REMOVAL AND REPLACEMENT (continued)

DRIVE SHAFT (For 4x4 model)

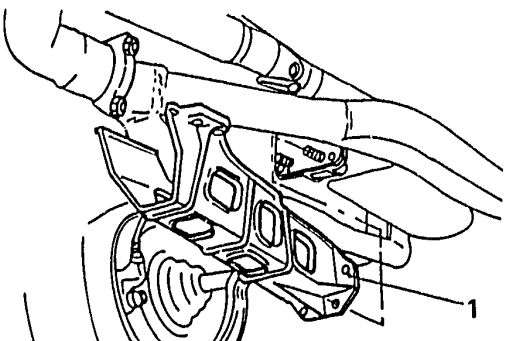

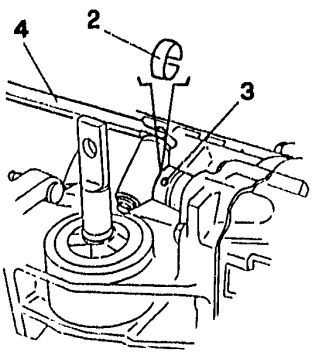

1. Remove the gear control lever support (refer to the following pages for the refitting operations).
2. Remove the flexible safety strap.
3. Remove retaining pin.
4. Remove the gear control lever.

ENGINE - TRANSMISSION UNIT REMOVAL AND REPLACEMENT (continued)

DRIVE SHAFT (For 4x4 model)

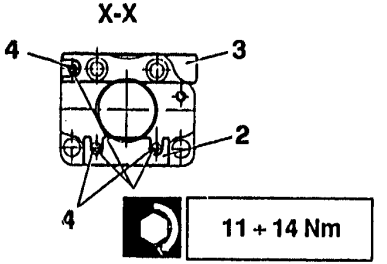

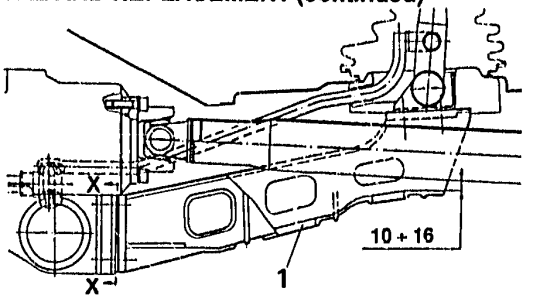

1. Remove the gear lever support (for 4x4 versions).

- When refitting the gear control lever it is necessary to check that it is the correct distance away from the drive shaft.

If it is not it is possible to operate as follows:

- Raise the vehicle.
- Check the distance between the support and the drive shaft.
- If the values is above 16 mm it will be necessary to insert one or more shims (2) under the lower nuts.
- If the value is below 10 mm it will be necessary to insert one or more shims (3) under the upper nut.
- Tighten the nuts (4) to the correct torque.

N.B. Each 0.5 mm shim will vary the value by ~ 3.5 mm.

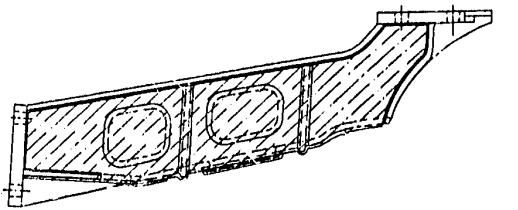

NOTE: Starting from chassis number 5822286, an off-loaded gear lever support has been fitted and the distance from the drive shaft need not be checked.

ENGINE - TRANSMISSION UNIT REMOVAL AND REPLACEMENT (continued)

DRIVE SHAFT (For 4x4 model)

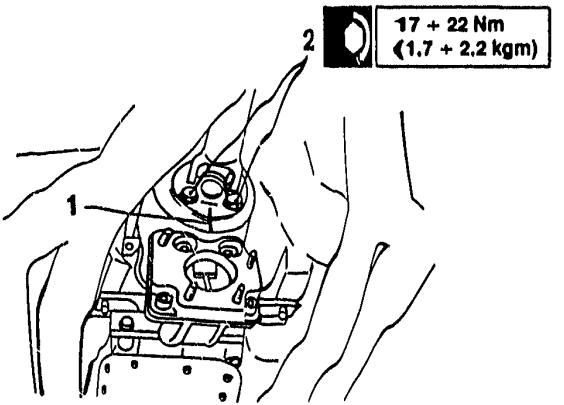

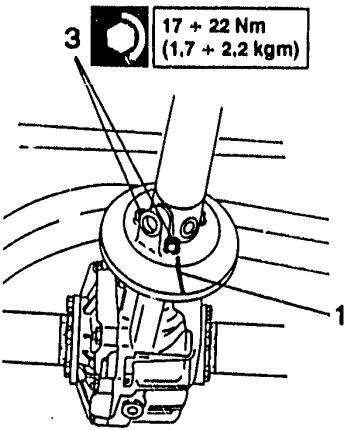

1. Mark the front and rear flanges of the drive shaft attachment to ensure that they are refitted correctly.
2. Loosen the four screws securing the front flange.
3. Loosen the four screws securing the rear flange to the flywheel.

ENGINE - TRANSMISSION UNIT REMOVAL AND REPLACEMENT (continued)

DRIVE SHAFT (For 4x4 model)

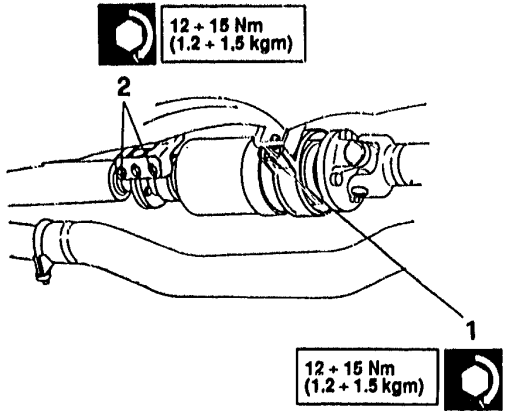

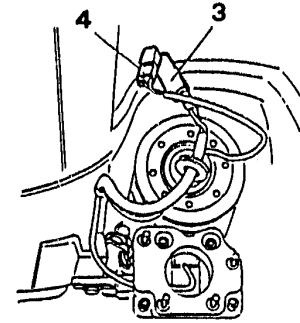

1. Loosen the two screws securing the rear flexible support of the viscous coupling.
2. Loosen the four screws securing the front support of the viscous coupling and remove the entire drive shaft.
3. Disconnect the electrical connection from the electromagnetic coupling.
4. Disconnect the electrical connection from the anti-disengaging sensor.

ENGINE-TRANSMISSION UNIT REMOVAL AND REPLACEMENT (Continued)

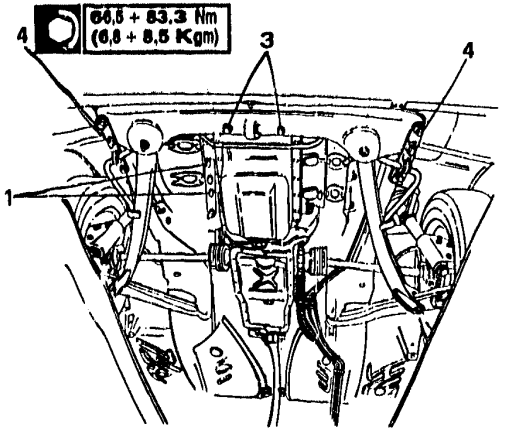

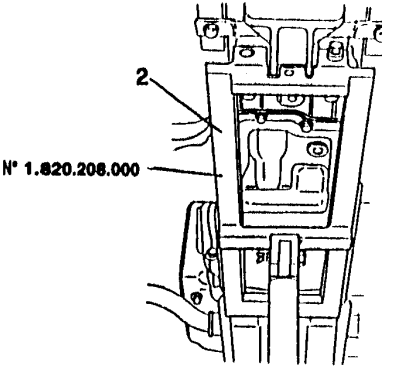

1. Undo the two engine torsion bar mounting brackets.
2. Position a column-type hydraulic jack fitted with support No. 1.820.208.000 under the engine-transmission unit to take part of the weight.
3. Release and remove the two bolts holding the front engine mounting to the cross-member.
4. Release and remove the bolts holding the cross-emebor to the body.

ENGINE-TRANSMISSION UNIT REMOVAL AND REPLACEMENT (Continued)

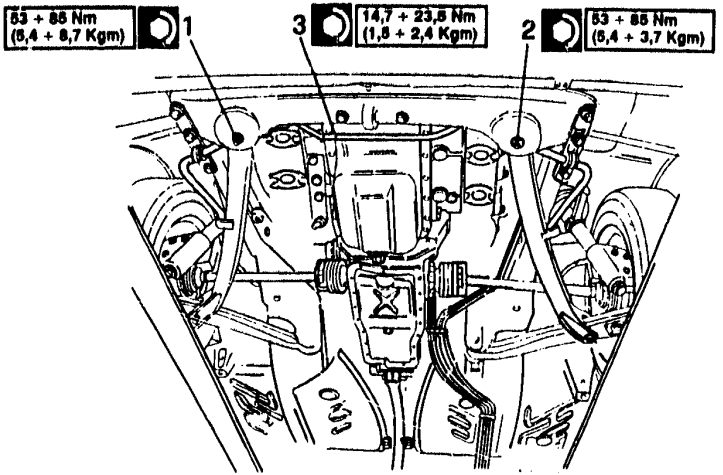

1. Slacken the front cross-member - RH strut union bolt.
2. Unscrew and remove the front cross-member LH strut union bolt and then free the strut from the cross--member.
3. Unscrew the stabilizer-bar mounting bolts from the LH suspension strut.

⇩

ENGINE-TRANSMISSION UNIT REMOVAL AND REPLACEMENT (Continued)

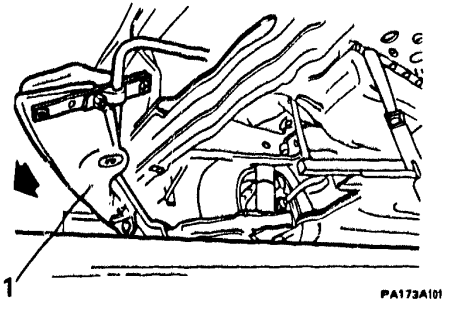

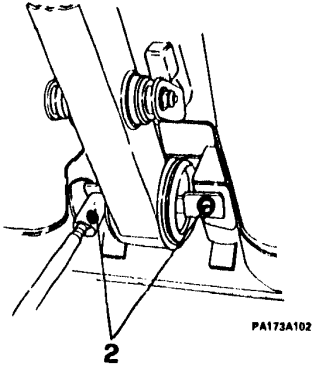

1. Pull away the front cross-member complete with stabilizer bar so that the engine - transmission unit may be extracted from underneath.

2. Release and remove the two engine rear mounting bolts from the body.

ENGINE-TRANSMISSION UNIT REMOVAL AND REPLACEMENT (Continued)

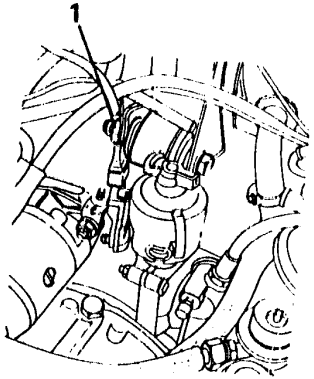

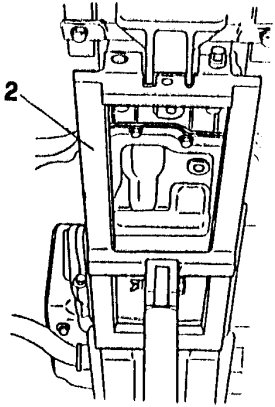

PA174A101

1. Slacken and remove the central engine mounting bolt from the body.
2. Lower the column jack and withdraw the engine - transmission unit from under the engine bay.

ENGINE - TRANSMISSION UNIT REMOVAL AND REPLACEMENT (continued)

CYLINDER COMPRESSION TEST

- After refitting test the cylinder pressure as follows:
- Run the engine to normal operating temperature.
- Disconnect the comb from the ignition-injection control unit (**see GROUP 40**).
- Remove the complete air cleaner (**see GROUP 04**).
- Remove the spark plugs.

1. Screw tool N° 1.820.216.000 into the spark plug seating of cylinder number 1.
2. Insert the test apparatus into the tool.

- Keeping the accelerator fully depressed, turn the starter until the maximum cylinder pressure is reached.
- Repeat the procedure for the remaining cylinders.

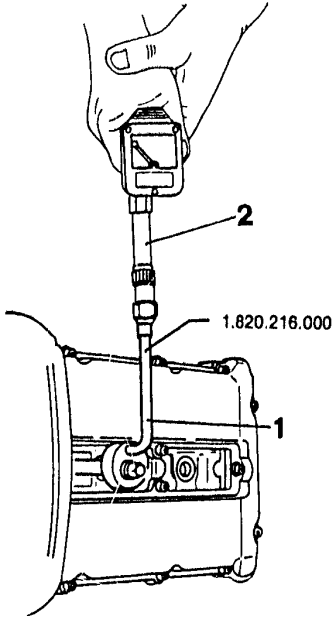

ENGINE/GEARBOX-DIFFERENTAIL SEPARATION AND UNION

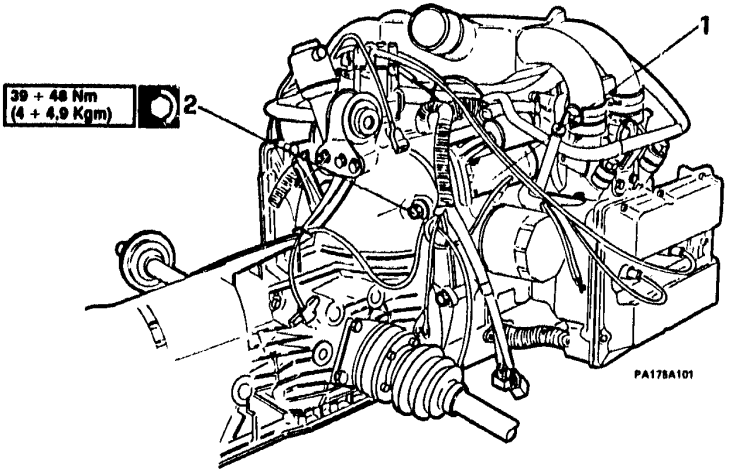

- Position the engine - transmission unit on rotary stand fitted with support tool No. 1.820.151.000.

1. Unscrew the nuts and remove the starter motor.

- Undo the screws and remove the flywheel cover plate.

2. Unscrew the nuts securing the gearbox-differential and separate the two groups.

Withdraw the thrust bearing from its housing in the gearbox, so as not to damage it.

- Lubricate the power take off shaft with the specified grease.

Grasso Molykote Paste G

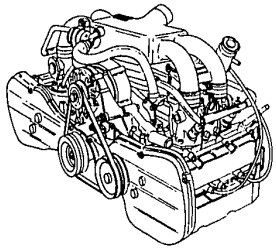

ELECTRONIC-INJECTION ENGINE (16 VALVES)

- PRELIMINARY DISMANTLING OPERATIONS
- ENGINE DISMANTLING AND REASSEMBLY

PRELIMINARY DISMANTLING OPERATIONS ..... 01 - 30
ENGINE DISMANTLING AND REASSEMBLY ..... 01 - 31
CYLINDER HEADS ..... 01 - 40
WATER PUMP ..... 01 - 41
CRANKSHAFT PULLEY AND SPROCKETS ..... 01 - 42
OIL PUMP AND SUMP ..... 01 - 43
FRONT BLOCK PLATE ..... 01 - 44
PISTONS AND CONNECTING RODS ..... 01 - 45

PRELIMINARY DISMANTLING OPERATIONS

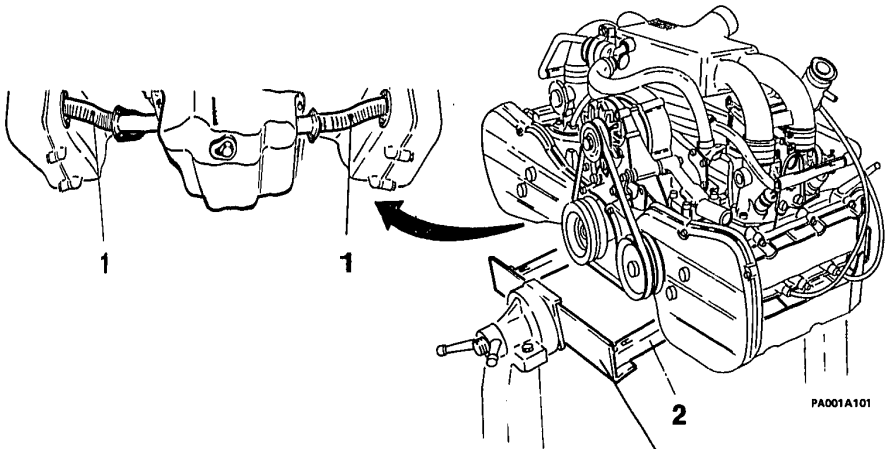

1. Remove the two cylinder-head oil pipes.

2. Support the engine on special engine stand No. 1.820.151.000.

ENGINE DISMANTLING AND REASSEMBLY

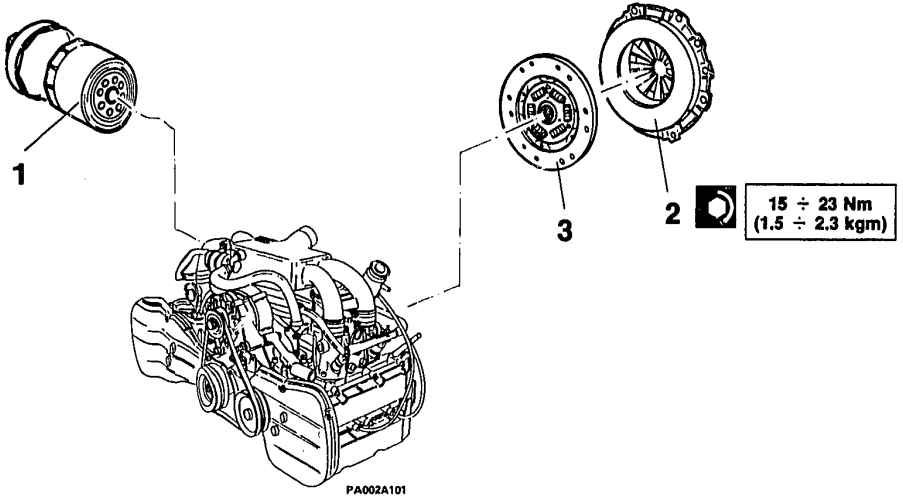

1. Remove the oil filter using the special tool.
2. Undo the six retaining bolts and remove the clutch cover.
3. Remove the clutch driven plate
   - Fit the crankshaft rotating tool.

ENGINE DISMANTLING AND REASSEMBLY (Continued)

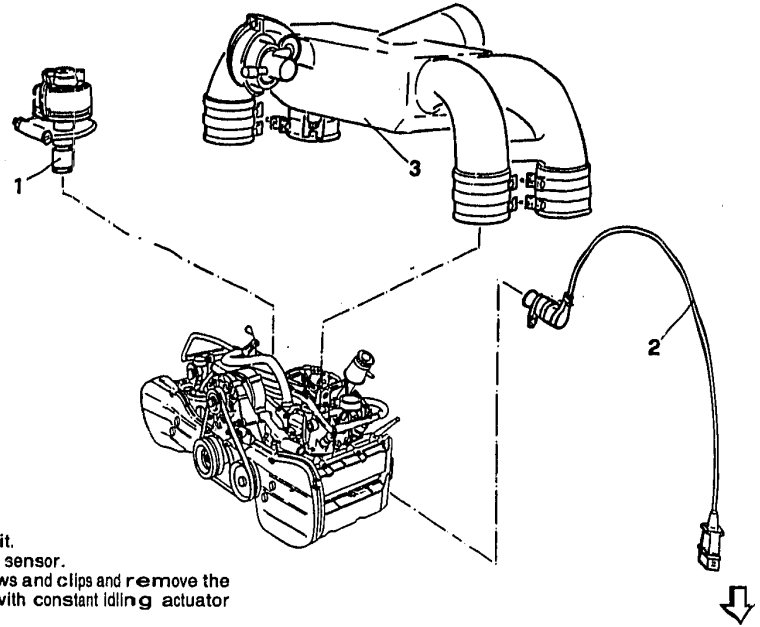

1. Remove the distributor unit.
2. Remove the R.P.M./phase sensor.
3. Slacken the retaining screws and clips and remove the air duct casing complete with constant idling actuator

ENGINE DISMANTLING AND REASSEMBLY (Continued)

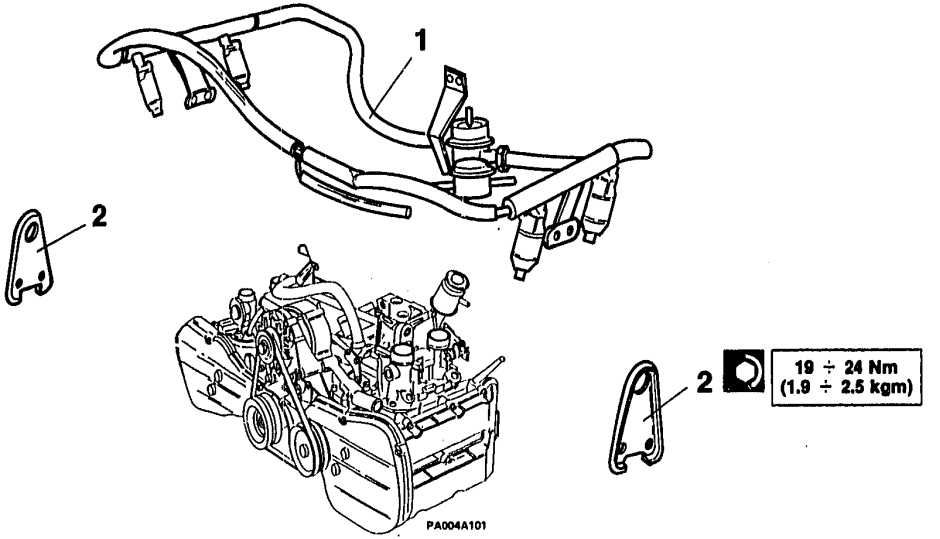

1. Remove the fuel-injection manifold assembly complete with injectors, pressure regulator and impulse damper.
2. Recover the engine lifting brackets.

ENGINE DISMANTLING AND REASSEMBLY (Continued)

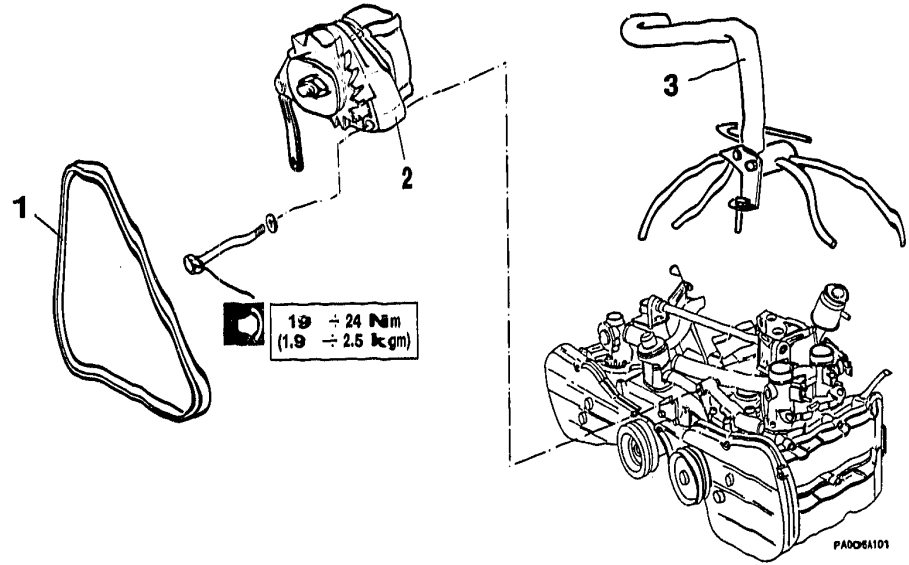

1. Slacken the two alternator fixing bolts and remove the drive belt.
2. Unscrew the two bolts and remove the alternator complete with bracket.
3. Remove the idle air-bleed hose assembly.

ENGINE DISMANTLING AND REASSEMBLY (Continued)

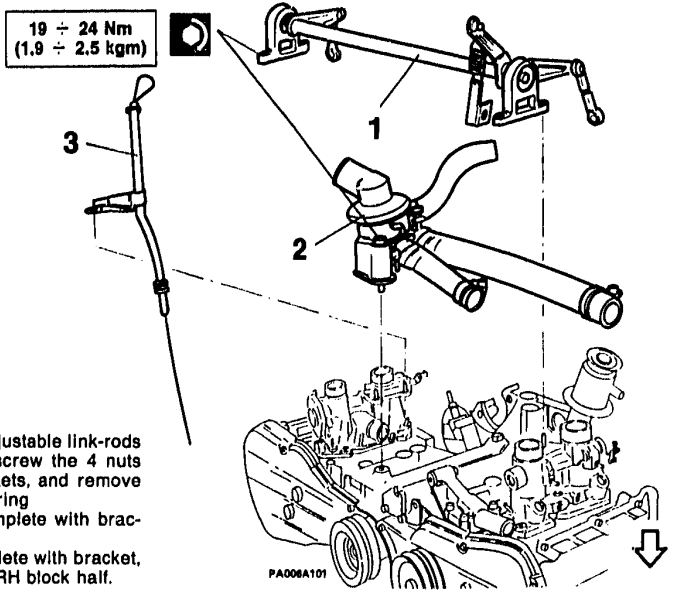

1. After having disconnected the two adjustable link-rods from their respective couplings, unscrew the 4 nuts from the accelerator link-shaft brackets, and remove the shaft assembly complete with spring
2. Remove the thermostat housing complete with brackets and tubes.
3. Remove the engine oil dipstick complete with bracket, unscrewing the retaining nut on the RH block half.

ENGINE DISMANTLING AND REASSEMBLY (Continued)

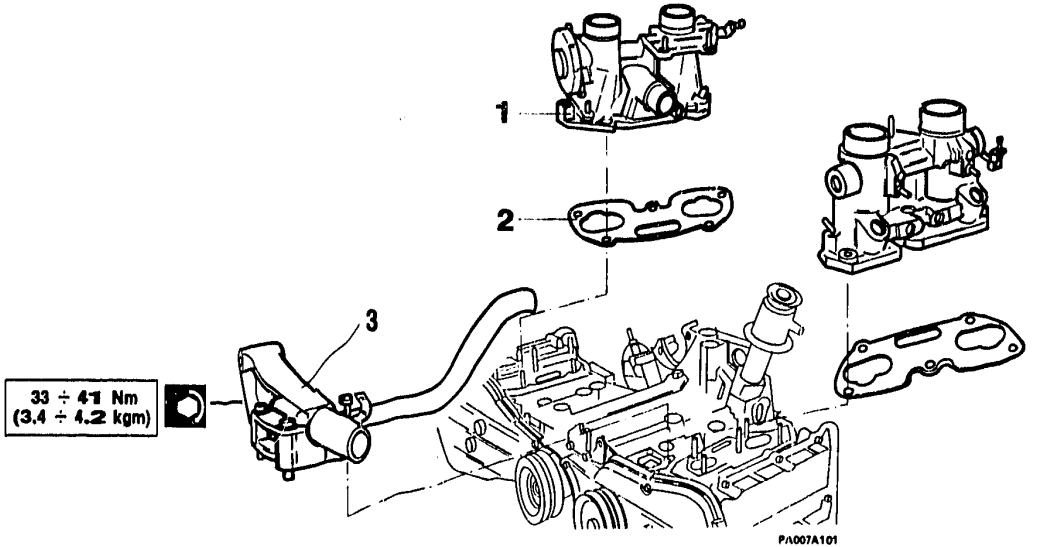

1. Undo the fixing nuts and remove the injector housings.
2. Recover the gaskets.
3. Remove the cooling liquid pipe union.

ENGINE DISMANTLING AND REASSEMBLY (Continued)

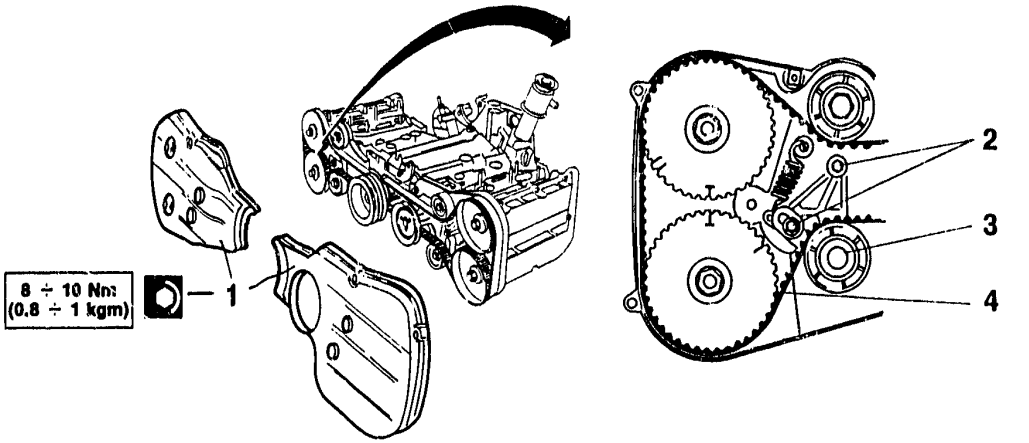

1. Undo the fixing screws and remove the front timing belt covers
2. Slacken the RH belt-tensioner retaining nuts.
3. Push the roller back against its spring and tighten the retaining nuts in this position, leaving the timing belt slack.
4. Withdraw the RH timing belt, and repeat the entire procedure for the LH belt.

⇩

ENGINE DISMANTLING AND REASSEMBLY (Continued)

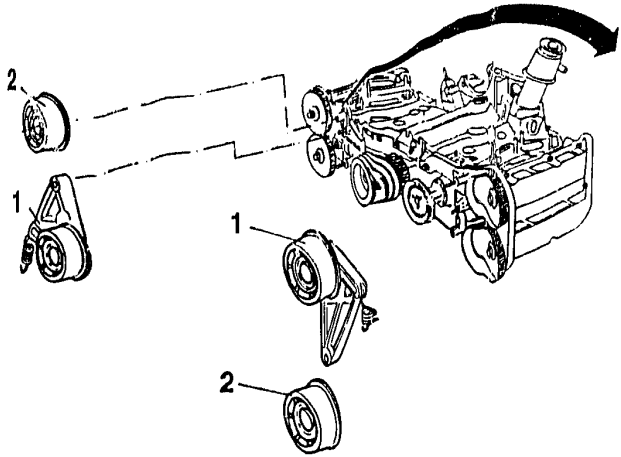

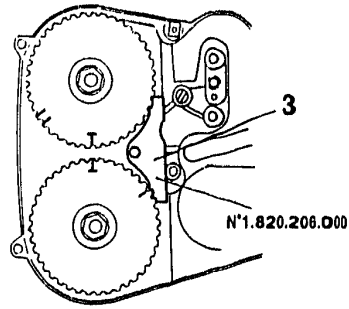

1. Unscrew the fixing nuts and remove the belt-tensioners with their springs.
2. Undo the retaining screws and remove the tensioner rollers.
3. Insert the special sprocket lock tool No. 1.820.206.000.

ENGINE DISMANTLING AND REASSEMBLY (Continued)

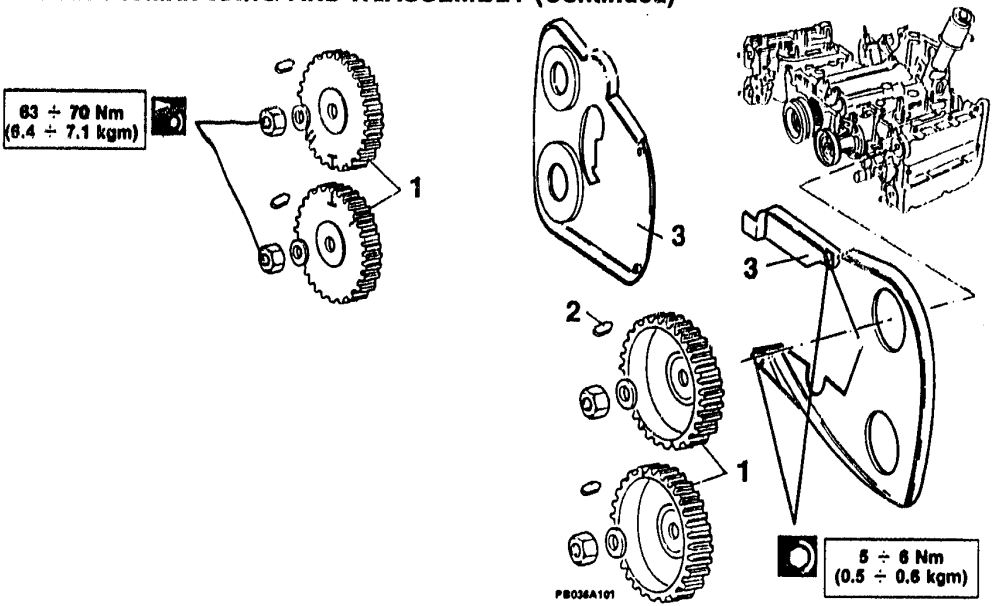

1. Unscrew the retaining nuts from the camshafts and withdraw the LH and RH timing belt sprockets.
2. Recover the 4 keys.
3. Remove the rear timing belt covers.

ENGINE DISMANTLING AND REASSEMBLY (Continued)

CYLINDER HEADS

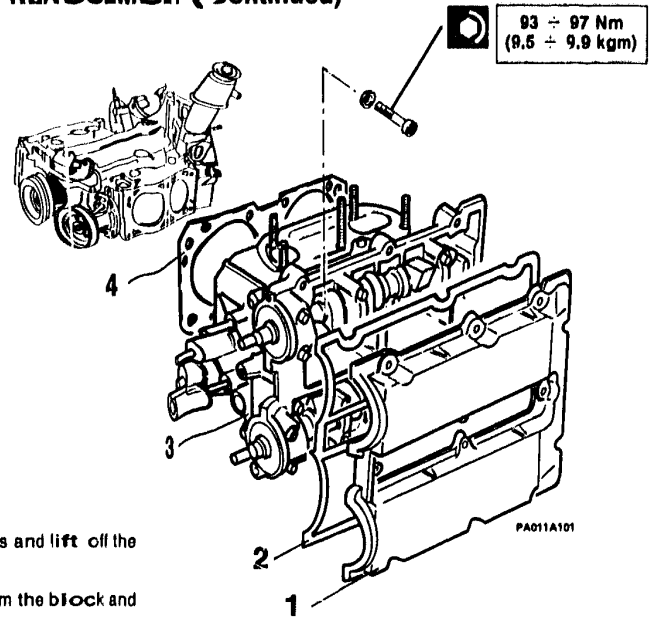

1. Remove the 12 camshaft cover screws and lift off the camshaft cover.
2. Remove the camshaft cover gasket.
3. Unscrew the 6 cylinder head bolts from the block and remove the cylinder head.
4. Remoe the cylinder head gasket.

- Repeat the operations for the other head.

ENGINE DISMANTLING AND REASSEMBLY (Continued)

WATER PUMP

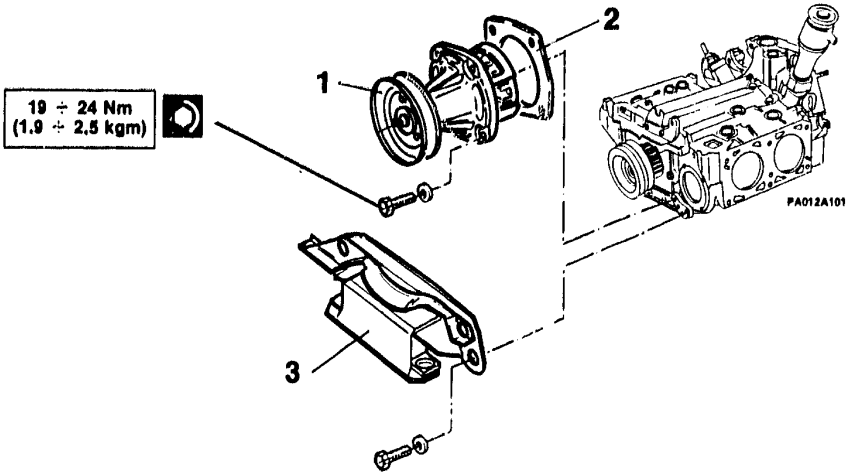

1. Undo the 4 bolts holding the water pump to the block, and extract the pump.
2. Remove the gasket.
3. Undo the 4 retaining screws and remove the guard with the front flexible engine mounting.

ENGINE DISMANTLING AND REASSEMBLY (Continued)

CRANKSHAFT PULLEY AND SPROCKETS

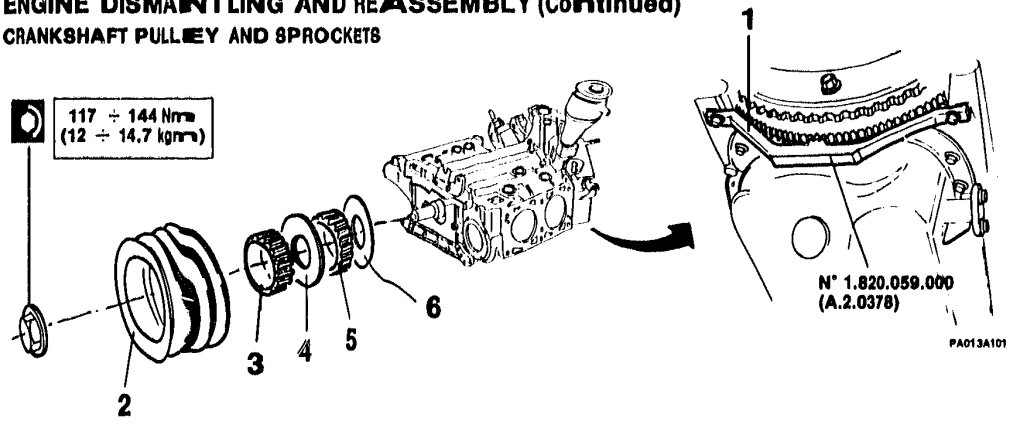

1. Lock the flywheel using special tool No. 1.820.059. (A.2.0378).
2. Withdraw the pulley from the crankshaft
3. Pull off the RH timing belt sprocket.
4. Slide off the spacer.
5. Pull off the LH timing belt sprocket.
6. Slide off the belt guide disk.
- Remove the special tool No. 1.820.059.000 (A.2.0378).

ENGINE DISMANTLING AND REASSEMBLY (Continued)

OIL PUMP AND SUMP

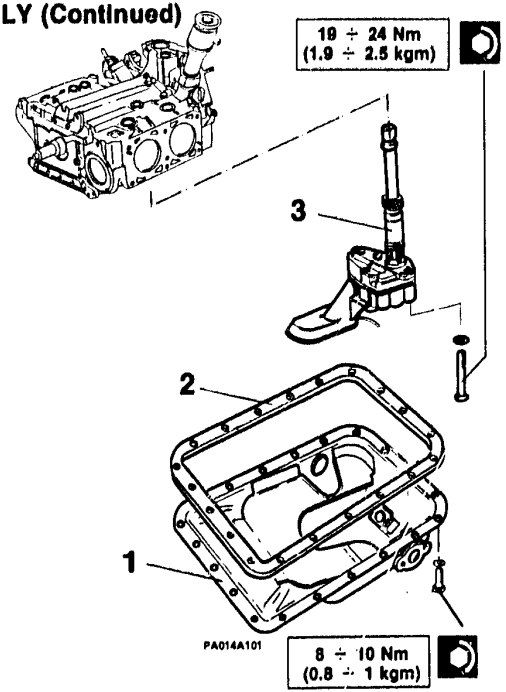

1. Unscrew the sump bolts and remove the sump.
2. Remove the gasket.
3. Unscrew the retaining bolts in the block end plate and extract the oil pump.

ENGINE DISMANTLING AND REASSEMBLY (Continued)

FRONT BLOCK PLATE

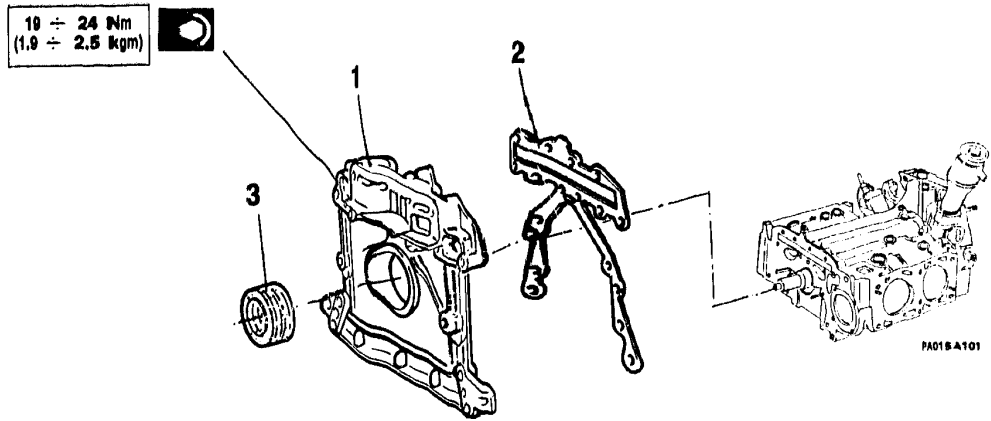

1. Remove the retaining screws and washers, and lift off the front block plate.
2. Remove the gasket.
3. Remove the oil seal from the plate (fit a new seal when reassembling).

ENGINE DISMANTLING AND REASSEMBLY (Continued)

PISTONS AND CONNECTING RODS

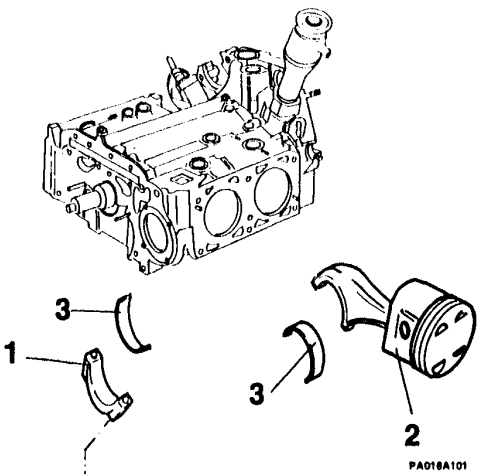

- Rotate the crankshaft until the big-end caps are accessible.
1. Remove the big-end bearing caps
2. Extract the pistons from the head side of the block completewith connecting rods.
3. Remove the big-end bearing shells from the connecting rod and cap.

ENGINE DISMANTLING AND REASSEMBLY

PISTONS AND CONNECTING RODS (Continued)

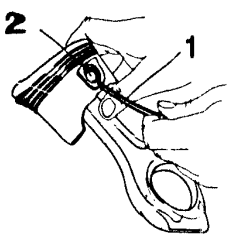

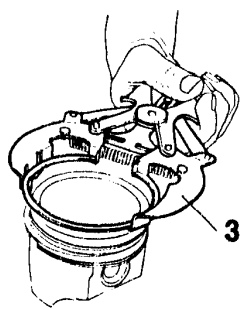

1 - Using a screwdriver extract the two gudgeon pin circlips.
2 - Extract the gudgeon pin.
3. Remove the compression and oil scraper rings from the piston.

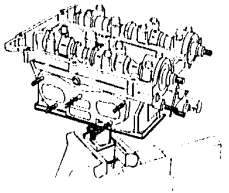

ELECTRONIC INJECTION ENGINE (16 VALVES)

- ENGINE DISMANTLING AND REASSEMBLY (Continued)
- CYLINDER HEAD OVERHAUL

ENGINE DISMANTLING AND REASSEMBLY

FLYWHEEL ..... 01 - 47
BLOCK END PLATE ..... 01 - 48
CRANKSHAFT ..... 01 - 49

CYLINDER HEAD OVERHAUL

CYLINDER HEAD DISMANTLING ..... 01 - 50
CYLINDER HEAD CHECKS ..... 01 - 53
- Cylinder head joint face ..... 01 - 53
- Valve guide clearance ..... 01 - 54
- Valve guide substitution ..... 01 - 55
- Valve seats ..... 01 - 56
- Valve seat substitution and valve seal testing ..... 01 - 58
- Valve springs ..... 01 - 59
- Tappets and seatings ..... 01 - 60
- Camshafts and bearings ..... 01 - 61
- Valves ..... 01 - 62

ENGINE DISMANTLING AND REASSEMBLY (Continued)

FLYWHEEL

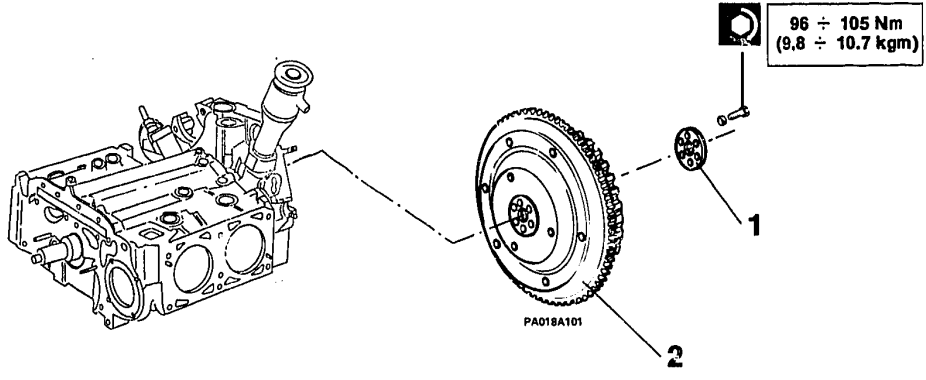

- After having first removed the crankshaft rotating tool used previously, lock the flywheel using special tool No. 1.820.059.000 (A.2.0378)
- Unscrew the bolts attaching the flywheel to the crankshaft.
1. Remove the bolt retaining washer.
2. Remove the flywheel.

ENGINE DISMANTLING AND REASSEMBLY (Continued)

BLOCK END PLATE

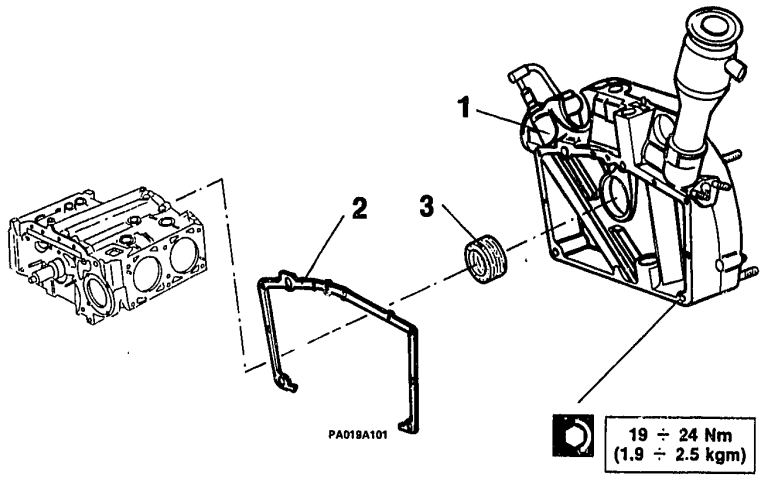

1. Undo the end plate screws and remove it.
2. Remove the gasket.
3. Extract the rear crankshaft oil seal (when reassembling, fit a new seal).

ENGINE DISMANTLING AND REASSEMBLY (Continued)

CRANKSHAFT

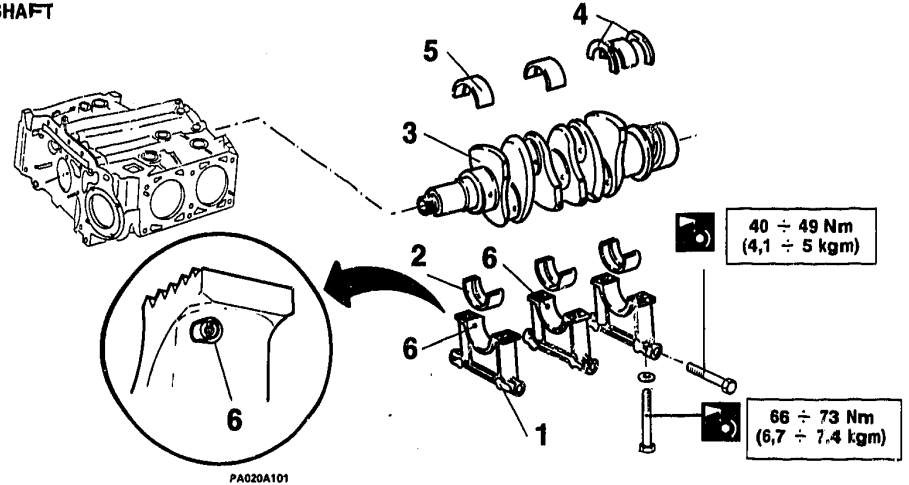

1. Unscrew the main bearing-cap retaining bolts and remove the caps.
2. Remove the lower main-bearing shellsfrom the caps.
3. Remove the crankshaft from the block.
4. Remove the thrust half-washers.
5. Remove the upper main-bearing shells.
6. When reassembling make sure to replace the caps fitted with oil spray nozzles in their correct positions

NOTE **As the crankshaft is nitrided it cannot be ground.**

CYLINDER HEAD OVERHAUL

CYLINDER HEAD DISMANTLING

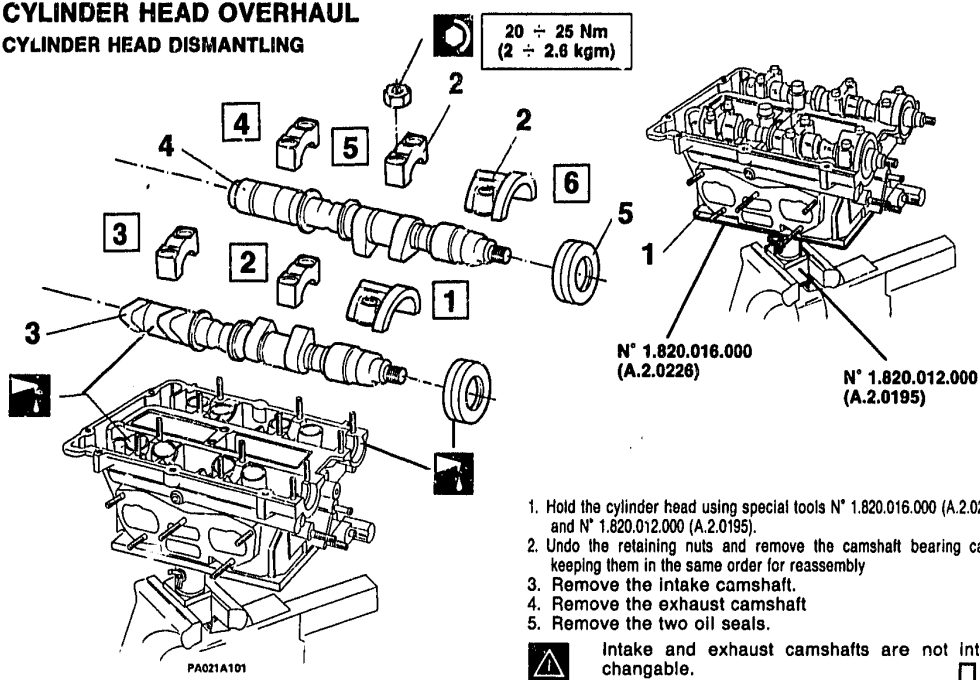

1. Hold the cylinder head using special tools N° 1.820.016.000 (A.2.0226) and N° 1.820.012.000 (A.2.0195).
2. Undo the retaining nuts and remove the camshaft bearing caps, keeping them in the same order for reassembly
3. Remove the intake camshaft.
4. Remove the exhaust camshaft
5. Remove the two oil seals.

⚠ Intake and exhaust camshafts are not interchangable.

CYLINDER HEAD DISMANTLING (Continued)

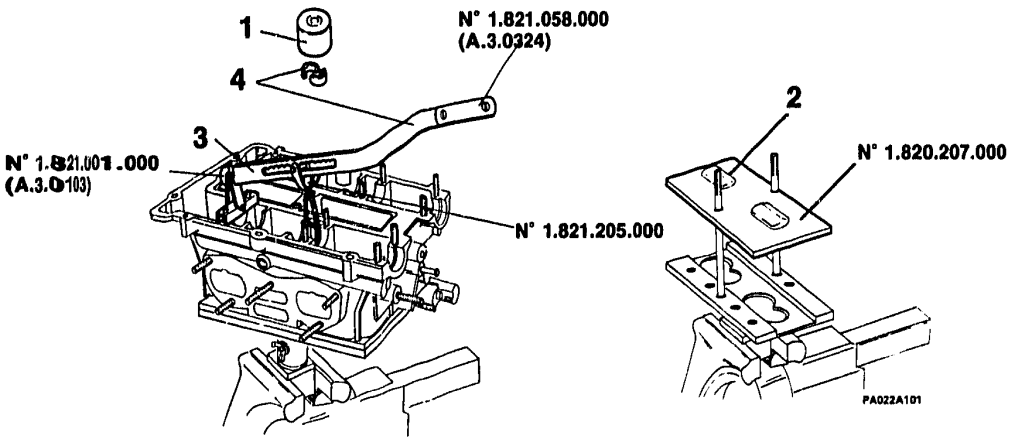

1. Lift off the tappets and keep them in the same order for reassembly
2. Position special tool No. 1.820.207.000 between the cylinder head and the support.
3. Fit special tools No. 1.821.001.000 (A.3.0103), No. 1.821.058.000 (A.3.0324) and No. 1.821.205.000 to cylinder head.
4. Extract the half cotters from the valve stem while compressing the valve spring.

- Repeat this procedure for each valve.

CYLINDER HEAD DISMANTLING (Continued)

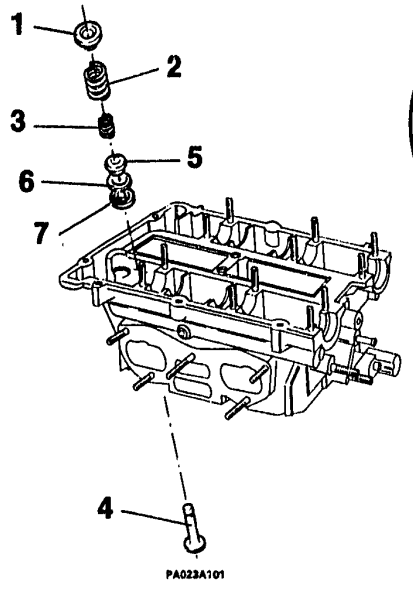

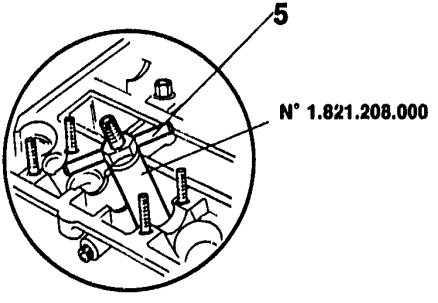

1. Remove the upper cup.
2. Remove the outer spring.
3. Remove the inner spring.
4. Recover the valve by lifting the head from the support No. 1.820.207.000.
5. Extract caps using special tool No. 1.821.208.000.
6. Remove the washers.
7. Remove the cup washers.

CYLINDER HEAD CHECKS

Cylinder head joint face

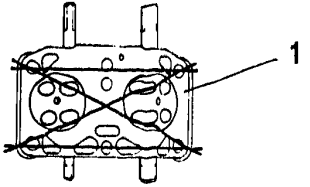

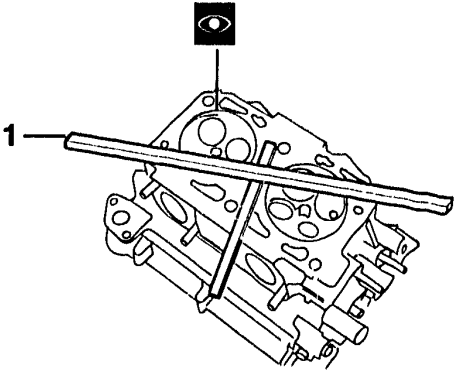

- Examine the cylinder head for cracks and defects.

1. Check the cylinder head joint face for flatness, positioning the tool as shown in the picture.

- If the joint face is excessively distorted both heads must be skimmed.

Maximum flatness tolerance for cylinder head joint face	0,03 mm

Maximum parallelism tollerance	0,05 mm
Surface finish allowed	1,6 x 10^{-3} mm

CYLINDER HEAD CHECKS (Continued)

Valve guide clearance

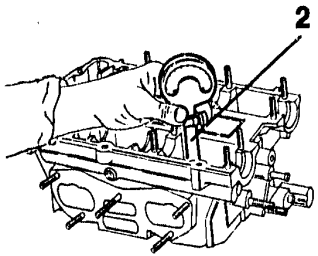

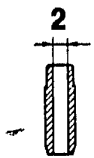

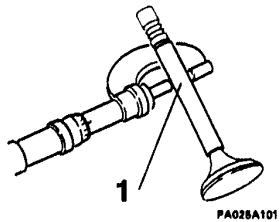

Radial clearance between guide and valve	
Intake	0,020 ÷ 0,185 mm
Exhaust	

1. Take valve stem diameter measurements using a micrometer in three places and at right-angles to each other.
2. Measure valve guide inside diameter using a dial gauge.
3. Calculate the clearance by subtracting the maximum valve stem diameter from the valve guide inside diameter

CYLINDER HEAD CHECKS (Continued)

Valve guide substitution

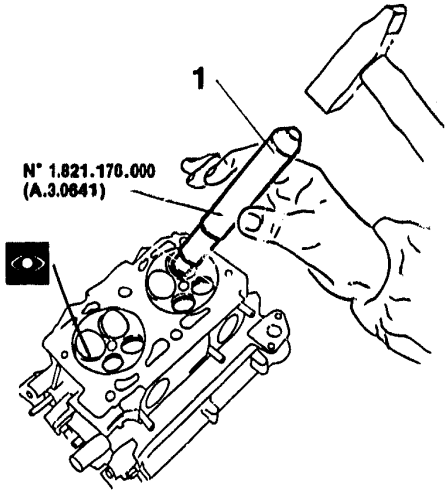

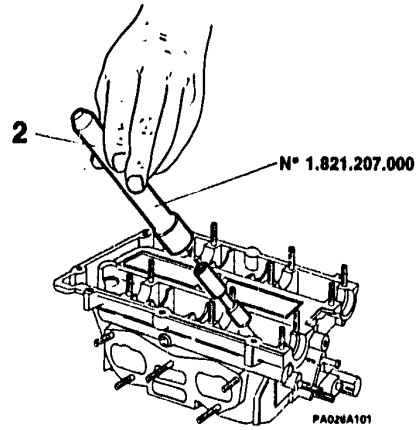

- Examine the valve guides for signs of scratches, grainy patches, distortion or movement in their housings.

1. If necessary extract the valve guides using the special tool No. 1.821.176.000 (A.3.0641).

2. Insert new valve guides using special tool No. 1.821.207.000. This tool ensures that the guides protrude above the lower cup washer seating face.

CYLINDER HEAD CHECKS (Continued)

Valve seats

- Make sure that the valve seats are free from scrapes, cracks or burn marks, and that they are correctly fitted in their housings in the cylinder head.
- If necessary, mount the cylinder head in the special clamp and re-grind the valve seat faces using the appropriate tool.
  This operation can only be carried out if there is sufficient metal on the seat to allow the defects to be removed while maintaining the seat angles shown; if this is not the case the valve seats will have to be renewed.

- Regrind the valve seat contact face until wear marks are just eliminated, to seat angle:

β	90° ± 20'

The regrinding limit is reached at point "a" on reference diameter $\varnothing_R$.

Reference diameter $\varnothing_R$	
Intake	31,0 mm
Exhaust	24,5 mm

Level "a" regrind limit	0,4 mm intake
	1,1 mm exhaust

- Grind the upper section of the valve seat up to reference diameter $\varnothing_R$ reached in the previous operation, maintaining seat cone angle of α

α	150° intake
	120° exhaust

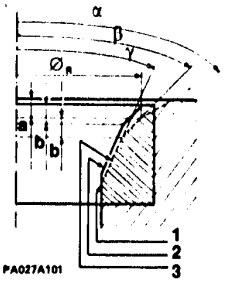

1. Valve seat
2. Original profile
3. Profile after the max. number of regrinds

CYLINDER HEAD CHECKS
Valve seats (Continued)

- Grind the inner band of the valve seat until height "b" of the valve contact face is reached, at seat angle γ

Inner band height	
Intake	0,9* mm
Exhaust	1,1 mm

Lower valve seat grinding angle	
Intake	-
Exhaust	14°

1. When the operation is finished, lap the valve seats. For valve seat lapping, use the recommended grinding paste (SIPAL AREXONS Carbosilicium for Valves).

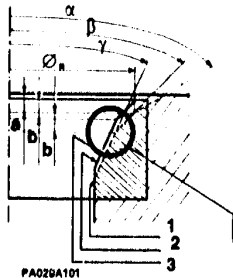

1. Valve seats
2. Original profile
3. Profile after the max. regrind depth

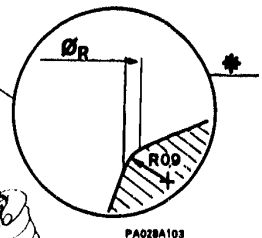

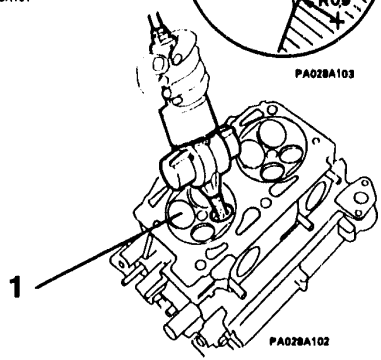

CYLINDER HEAD CHECKS (Continued)

Valve seat substitution and valve seal testing

- Remove the worn valve seats using the correct tool.
- Using a set of new valve seats make surethat the dimensions shown in the table are respected.

	Valve	Engine
Valve seat outside diameter mm	a.	34 $^{+0,116}_{+0,100}$ mm
	s.	28 $^{+0,116}_{+0,096}$ mm
Valve seat housing diameter mm	a.	34 $^{+0,025}_{+0}$ mm
	s.	28 $^{+0,021}_{+0}$ mm

a. = Intake valve

s. = Exhaust valve

- Heat up the cylinder head in an oven to 140°C.
- Insert the new valve seats using the correct tool.
- When replacing the guides and after finishing and sanding the seats, the sealing of the valves should be checked with the spark plugs fitted and operating as follows:
- Mount the cylinder head on tool No. 1.820.012.000 (A.2.0195) with relative base No. 1.820.016.000 (A.2.0226) previousely clamped in a vice.
- Fill the combustion chamber with petrol.
- Connect a low-pressure air supply to the intake passages and check for air bubbles in the petrol.
- Check the exhaust valves for sealing in the same way.
- If any air passage is noted, make sure that the valves fit perfectly in their seats and repeat the sealing test; if this is still negative, it will be necessary to carry out the lapping operation again

CYLINDER HEAD CHECKS (Continued)

Valve springs



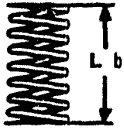

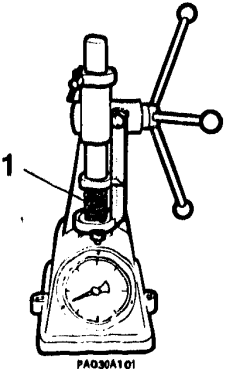

- Check the free length of the valve springs against the values shown.

The springs must be tested between parallel surfaces perpendicular to their axes with a maximum of 2° error.

1. Using a dynamometer, check the valve specifications against the values shown.

Free spring length		
Outer spring	L_a	~ 51,8 mm
Inner spring	L_b	38 mm

Outside spring		
Spring length	mm	Test load N
Valve closed	32,5	215,746 ± 5,8
Valve open	22,9	349,312 ± 9,8

Inner spring		
Spring length	mm	Test load N
Valve closed	30,5	137,293 ± 3,922
Valve open	20,9	321,560 ± 8,82

CYLINDER HEAD CHECKS (Continued)

Tappets and seatings

Ø	Valve tappet seating diameter (intake and exhaust)
	33,000 ÷ 33,025 mm

Ø	Valve tappet diameter (intake and exhaust)
	32,975 ÷ 32,959 mm

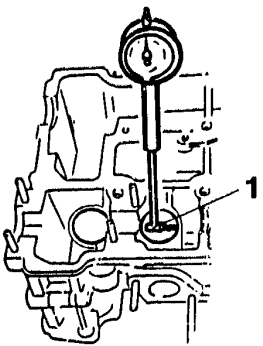

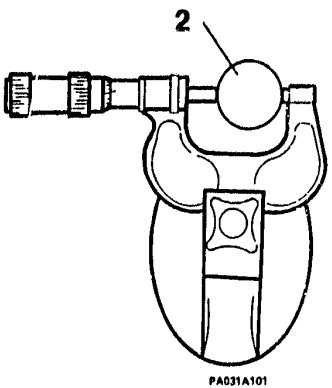

1. Check tappet seating diameters against the values shown.
2. Check tappet outside diameters against the values shown.

CYLINDER HEAD CHECKS (Continued)

Camshafts and bearings

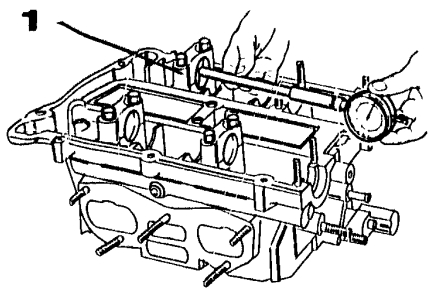

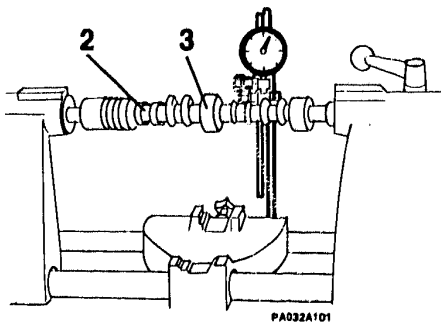

Diameter of camshaft pins	26.959 - 26.980 mm
Outer camshaft pin	27.000 - 27.033 mm

Minimum cam lift	
Intake	9,0 mm seatings 9,5 mm inner
Exhaust	9,2 mm

1. Mount the camshaft bearing caps and tighten the oiled nuts to the correct torques, and check the bearing diameters against the values shown.
2. Check the camshaft journal diameters against the values shown.
3. Make sure that the cam lifts exceed the minimum values shown.

CYLINDER HEAD CHECKS (Continued)

Valves

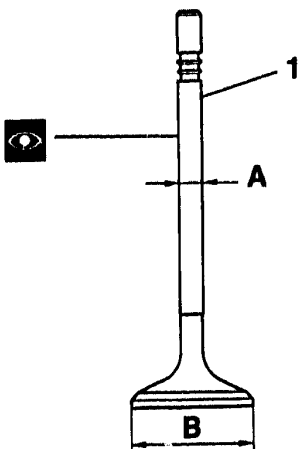

PA033A101

Valve stem diameter "A"	
Intake	6,965 ÷ 6,98 mm
Exhaust	

Valve head diameter "B"	
Intake	31,8 ÷ 32,0 mm
Exhaust	25,8 ÷ 26,0 mm

1. Check the valve stem and head diameters against the values shown.

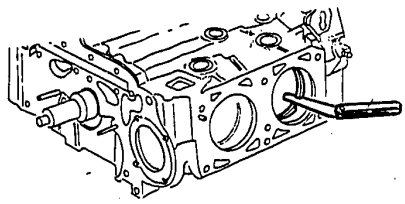

ELECTRONIC-INJECTION ENGINE (16 VALVES)

- BLOCK CHECKS

BLOCK CHECKS

CRANKSHAFT ..... 01 - 63
- Main and big-end journals ..... 01 - 63
MAIN AND CONNECTING HALF BEARING - THRUST RINGS ..... 01 - 66
PISTONS AND GUDGEON PINS ..... 01 - 67
COMPRESSION AND OIL SCRAPER RINGS ..... 01 - 69
CONNECTING RODS ..... 01 - 70
PISTON AND CONNECTING ROD WEIGHT BALANCE ..... 01 - 71
BLOCK ..... 01 - 72
CYLINDER LINER - PISTON MATCHING ..... 01 - 75
FLYWHEEL ..... 01 - 76

BLOCK CHECKS

CRANKSHAFT

Main and big-end journals

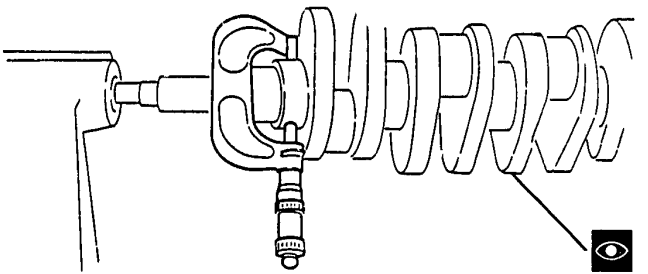

PA034A101

Main-bearing journal	blue	59,944 ÷ 59,954 mm
	red	59,954 ÷ 59,964 mm
Big-end journal	blue	49,984 ÷ 49,992 mm
	red	49,992 ÷ 50,000 mm

NOTE The crankshafts for this engine are nitrided and therefore cannot be reground; in the case of excessive wear, the crankshaft must be substituted.

- The crankshaft journals are divided into two classes, identified with blue or red marks according to the machining tollerances.
- Check main-bearing and big-end bearing crankshaft journal diameters against the values shown

CRANKSHAFT

Main and big-end journals (continued)

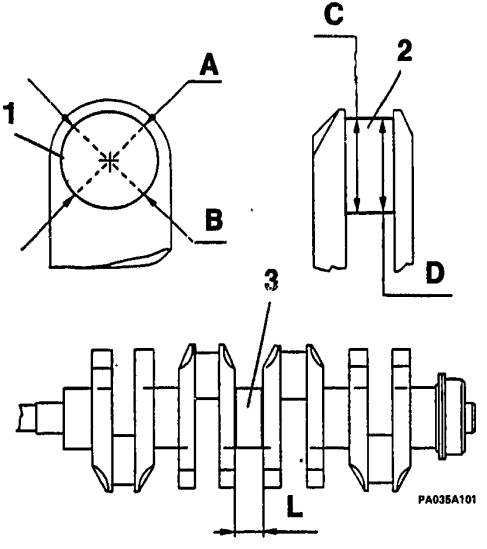

○	Maximum journal ovality tollerance	A-B = 0,02 mm
◁	Maximum journal taper tollerance	C-D = 0,02 mm
⊢⊣	Centre main-bearing journal length	L = 26,16 ÷ 26,96 mm

1. Check journal ovality measurements against values shown.
2. Check journal taper against tollerances shown.
3. Check centre journal length against dimensions shown.

CRANKSHAFT

Main and big-end journals (continued)

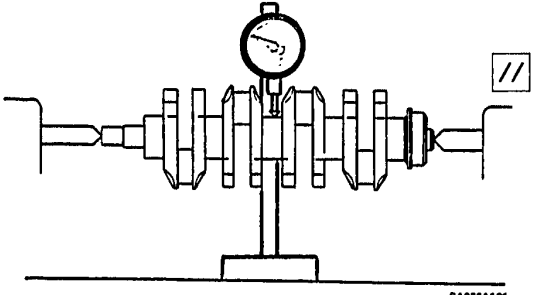

PA036A101

Maximum eccentricity between main journals	0,02 mm
Maximum deviation from parallel between big-end and main journals	0,015 mm
Maximum deviation in axes between the two pairs of big-end journals and the main journals	0,25 mm

- Make sure that:
  - the eccentricity between main-bearing journals;
  - the parallelism between main and big-end bearing journals;
  - the shift in axes between the two pairs of big-end journals and the main journals fall within the limits shown.

MAIN AND CONNECTING HALF BEARINGS - THRUST RINGS

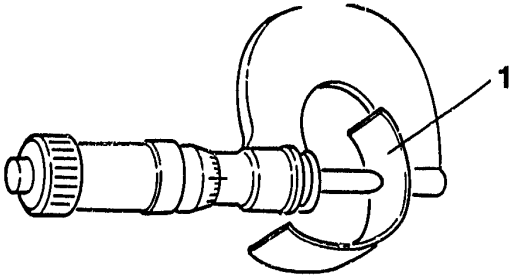

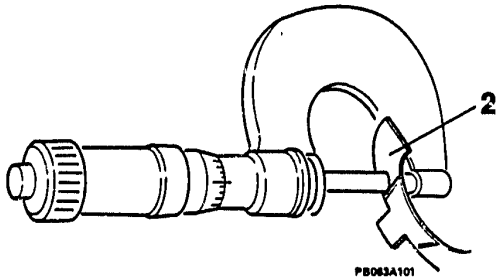

Class	Half bearing thickness	
Red	Main	1.832 to 1.836 mm
	Big end	1.826 to 1.832 mm
Blue	Main	1.836 to 1.842 mm
	Big end	1.830 to 1.836 mm

Half thrust ring thickness	2.311 to 2.362 mm

- The coupling between main and big end half bearings and crankshaft must be carried out by matching parts of the same class which are tagged on the half bearing side and on the corresponding journal with the same RED or BLUE coloured mark.

1. Check that the half bearing thickness ranges within the specified values.
2. Check that the half thrust ring thickness ranges within the specified values.

PISTONS AND GUDGEON PINS

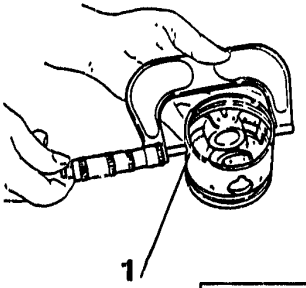

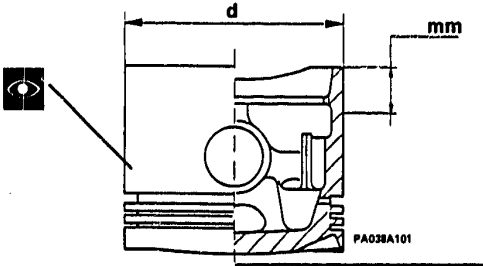

Units: mm

			PISTON MONDIAL	PISTON BORGO
Ø	Outside diameter (d)	Class A (Blue)	86,950 ÷ 86,960	86,960 ÷ 86,970
		Class B (Pink)	86,960 ÷ 86,970	86,970 ÷ 86,980
		Class C (Green)	86,970 ÷ 86,980	86,980 ÷ 86,990
		Class D (Yellow)	86,980 ÷ 86,990	86,990 ÷ 87,000
		Class E (White)	86,990 ÷ 87,000	87,000 ÷ 87,010

- The pistons like the cylinder liners have been divided in to five classes depending of the manufacturing tollerances. These classes, identified by the letters A, B, C, D and E, are marked by blobs of BLUE, PINK, GREEN, YELLOW or WHITE paint on the piston ceiling.

1. Check that the piston outside diameter falls into the dimensions shown.

NOTE This diameter must be measured at right angles to the gudgeon pin axis, and at 11,5 mm and 13,9 mm from the piston skirtfor the Borgo and Mondial versions respectively.

PISTONS AND GUDGEON PINS (Continued)

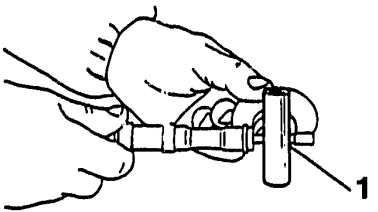

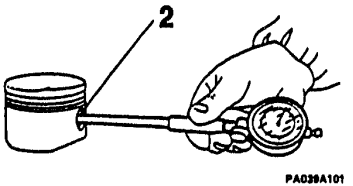

Ø	**Gudgeon pin outside diameter**	**20,996 ÷ 21,000 mm**

Ø	**Gudgeon pin hole diameter**	**21,004 ÷ 21,008 mm**

1. Check the gudgeon pin outside diameter against the dimensions shown.

2. Check the diameter of the gudgeon pin hole in the piston against the dimensions shown.

COMPRESSION AND OIL SCRAPER RINGS

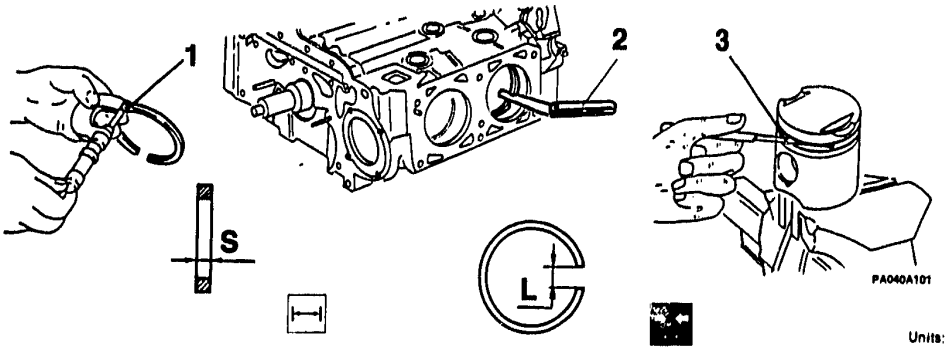

Units: mm

	Thickness "S"	Gap "L"	Ring end float
Compression ring	1,478 ÷ 1,490	0,30 ÷ 0,50	0,045 ÷ 0,077
Oil control ring	1,728 ÷ 1,740	0,30 ÷ 0,50	0,035 ÷ 0,067
Oil scraper ring	2,978 ÷ 2,990	0,25 ÷ 0,50	0,025 ÷ 0,057

1. Check the thickness S of the compression and oil--scraper rings against the dimensions shown.
2. Fit the rings inside the appropriate test tool or in the engine cylinders, and check gap L against the values shown.
3. Check that the end float values for the rings in their slots fall within the figures shown.

CONNECTING RODS

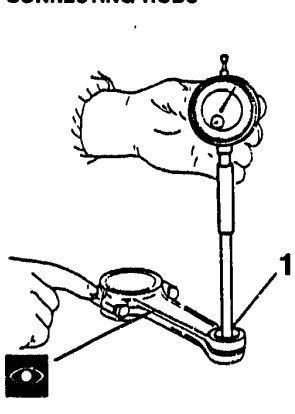

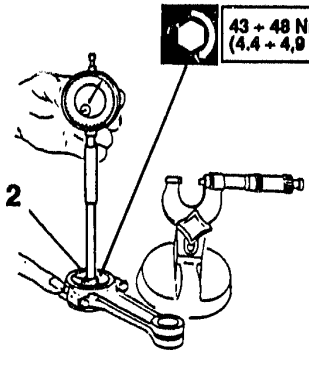

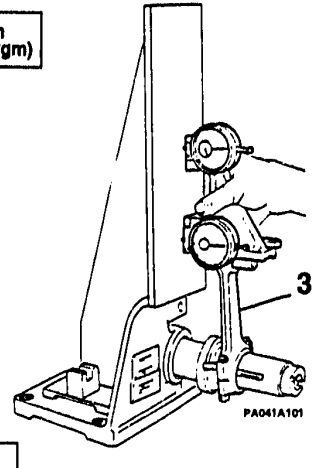

Ø	Small-end bush bore
	21,007 ÷ 21,015 mm

Ø	Big-end bearing inside diameter
	53,696 ÷ 53,708 mm

1. Check that the small-end bore is within the limits shown.
2. Mount the big-end bearing caps on the connecting rod and tighten the well-oiled nuts to the correct torque value shown. Check that the big-end bearing diameter falls within the limits shown.
3. Check the conecting rods for trueness.

PISTON AND CONNECTING ROD WEIGHT BALANCE

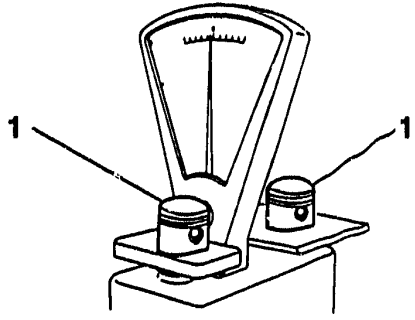

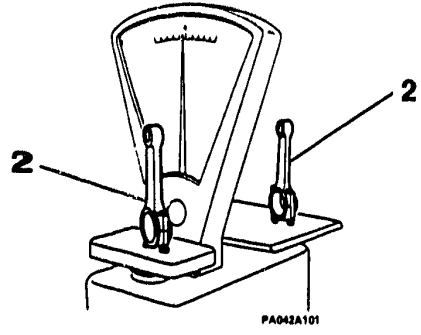

Differenza di peso tra i pistoni ≤2 grammi		Connecting rod weight difference ≤2 grammi

- Mate the gudgeon pins to the pistons according to their size class code (BLACK or WHITE).
  Insert the gudgeon pins in the pistons and retain them with the circlips; fit the compression and oil rings.
1. Ensure that the difference in weight between pistons falls within the limits shown.
2. In the same way, check that the difference in weight between the connecting rods complete with big-end caps and nuts falls inside the limits shown.

BLOCK

- Examine the engine block for cracks or signs of wear on the bearing surfaces.
- Check the surface finish of the cylinder bores.

Cylinder bore maximum surface roughness	**(0,5 ÷ 1) x 10^{-3} mm**

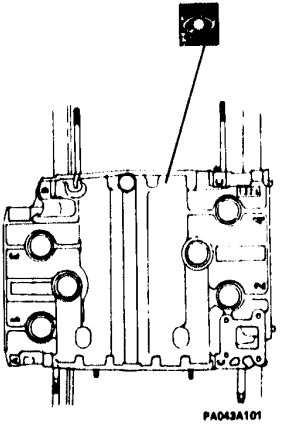
PA043A101

- Identify the cylinder bore class and proceed with dimensional checks.
  The cylinder liners are divided into five bore classes, A, B, C, D and E, which is stamped on the top of the block next to each cylinder.
- For the dimensions relative to each class, see "Technical Specifications and Notes".

BLOCK (Continued)

1. Reset the cylinder gauge using a micrometer.
2. At the depth indicated, measure the diameter value and check that the taper and ovalization of the cams is within the specified limits.

Maximum cylinder taper	**A-B = 0,02 mm**

Maximum cylinder ovality	**X-Y = 0,02 mm**

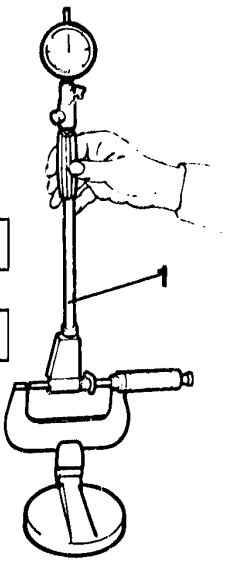

PA044A101

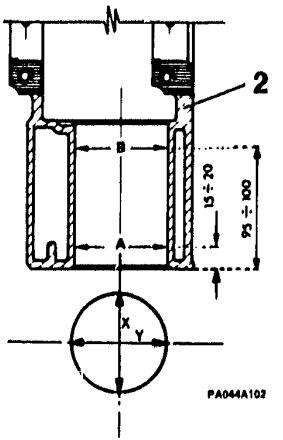

PA044A102

- Compare the values measured D with the normal values C corresponding to each cylinder class, and calculate the value of maximum cylinder wear.

Maximum cylinder wear	**D-C = 0,04 mm**

BLOCK (Continued)

- If dimensions are found to be out of tollerance, the cylinders will have to be re-bored, bearing in mind that three piston oversizes are available; re-bore diameters are listed in "Technical Specifications and Notes".

- Install the main caps on the engine block and tighten the screws to the correct torque.

- Re-bore the cylinders to the sizes shown in "Technical Specifications and Notes".

⚠ Honing marks on the bores after the operation must form a diamond pattern with intersection angles of 90° ÷ 120°.

- If bore wear is found to be within limits but the pistons and rings have to be changed for other reasons, bore honing must however be carried out; in this event bore diameter must be measured and the new bore class defined (independent from the class code stamped on the block) for piston mating purposes.
  If cylinder bore is no longer identified by the letter stamped on the block following honing operations, the code letter must be cancelled in order to avoid any errors in subsequent selections.

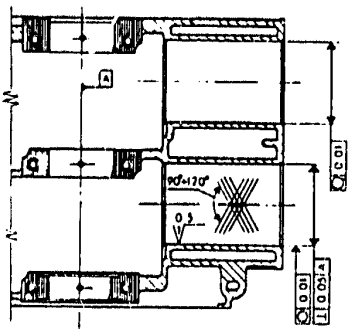

F8071A101

CYLINDER LINER - PISTON MATCHING

- Cylinder - piston set selection is carried out by matching each cylinder liner code letter (stamped on the top of the block) with pistons having the same letter stamped on the crown, or the corresponding color code (shown in the table).

Code letter Ø liner	Piston code letter and color
A	A - blue
B	B - pink
C	C - green
D	D - yellow
E	E - white

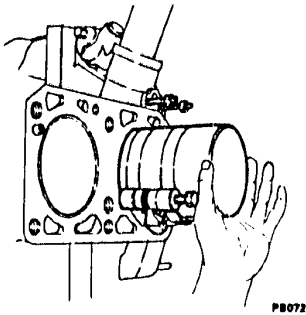

PB072A101

If the code letter on the block has been cancelled, selection is made on the basis of the letter on the piston to be substituted; in such a case it is however advisable to measure the bore diameter.

- For re-bored cylinders, matching pistons complete with rings are available in oversizes of 0,2 - 0,4 and 0,6 mm, corresponding to the oversize liner.

FLYWHEEL

- Check the gear-ring teeth for chips and signs of wear from poor meshing; if present, the flywhee must be substituted.
- Check the surface on which the clutch driven-plate operates for cuts, pitting or signs of overheting. It is first advisable to ensure that the clutch face has not already been skimmed, and that there is sufficient material to eliminate any defects.
  To this end, make sure that the thickness "B" shown in the drawing exceeds the limit in the table, and that the excess metal is sufficient to allow correction.

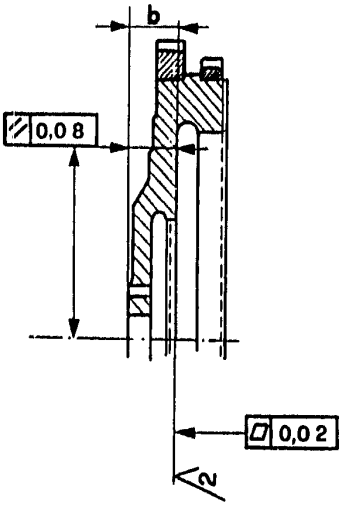

REFERENCE THICKNESS
B ≥ 21,15

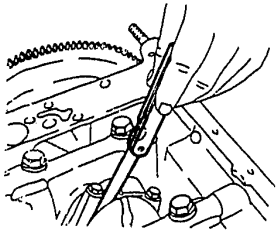

ELECTRONIC-INJECTION ENGINE (16 VALVES)

- ENGINE REASSEMBLY

ENGINE REASSEMBLY

NOTES ON REASSEMBLY..... 01 - 77
CYLINDER HEADS..... 01 - 78
PISTONS AND CONNECTING RODS..... 01 - 80
CRANKSHAFT..... 01 - 81
ENGINE ASSEMBLY COMPLETE..... 01 - 82
BLOCK END PLATE..... 01 - 85
FLYWHEEL..... 01 - 86
PISTONS AND CONNECTING RODS..... 01 - 87
FRONT BLOCK PLATE AND FRONT ENGINE MOUNTING..... 01 - 89
CRANKSHAFT SPROCKETS AND PULLEYS, AND WATER PUMP..... 01 - 90
OIL PUMP..... 01 - 91
DISTRIBUTOR..... 01 - 92

ENGINE REASSEMBLY

NOTES ON REASSEMBLY

- Lubricate all bearings and running surfaces with engine oil before reassembling.
- Use only new gaskets, oil seals and circlips.
- Tighten bots and nuts to the correct torque values specified.
- Apply the sealing compounds specified to the following components:
  - Oil sump gasket, block side.
    Mastic category 3522-00040 DOW CORNING Silastick 732 RTV
  - Cylinder head and block waterway plugs.
    Mastic category 3524 - 00011 LOCTITE 601 (green)
- Before applying sealing compounds, remove all traces of the old compound and degrease the surfaces.

CYLINDER HEADS

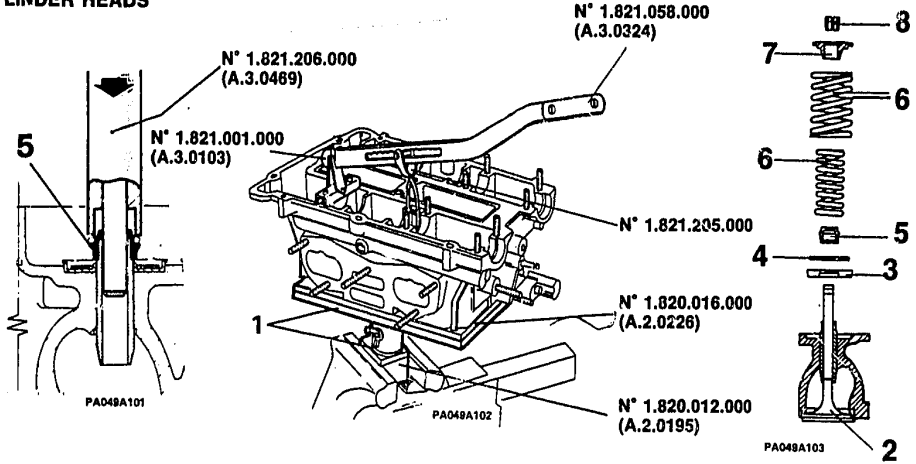

1. Clamp the support tool No. 1.820.012.000 (A.2.0195) and baseNo. 1.820.016.000 (A.2.0226) in a vice.
2. Insert the valves in their seats
3. Insert the cup washer.
4. Insert the lower washer.
5. Insert the valve guide oil seals using special tool No. 1.821.206.000 (A.3.0469).
6. Insert the valve springs.
7. Insert the upper cotter retaining cup.
8. Replace the split cotters using tools No. 1.821.001.000 (A.3.0103), N° 1.821.058.000 (A.3.0324) e N° 1.821.205.000.

⚠ The springs must be mounted with the ends having closer turn spacing in contact with the head.

- Follow the moounting procedure and perform the valve sealing test.

CYLINDER HEADS (Continued)

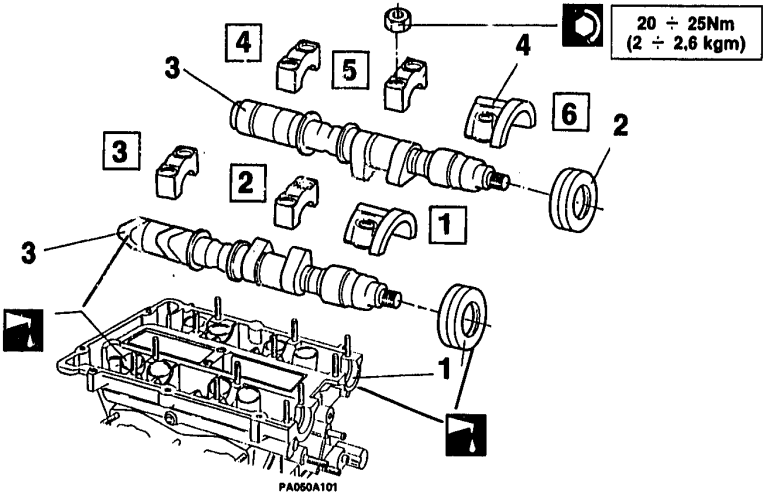

1. Fit the tappets in their housings.
2. Fit the camshaft oil seals.
3. Place the intake and exhaust camshafts in their correct positions.
4. Attach the camshaft bearing caps and tighten the nuts.

⚠ The intake and exhaust camshafts are not interchangable.

PISTONS AND CONNECTING RODS

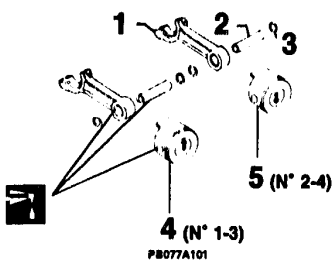

PB077A101

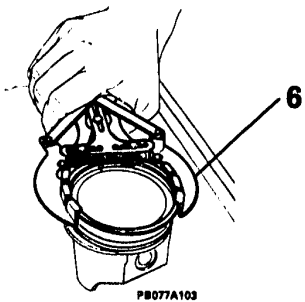

PB077A103

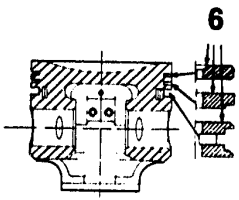

PB077A102

Clearance between liner and piston		
Normal	0.04 to 0.06 (*)	0.03 to 0.05 (**)
Oversize	0.04 to 0.06 (*)	0.03 to 0.05 (**)

(*) Pistone Mondial (**) Pistone Borgo

- Choose the pistons as specified in "Coupling cylinder liners and pistons".

1. Place the connecting rod inside the piston.
2. Insert the pin.
3. Insert the two circlips.
4. Position the pistons of the right-hand head with the arrow facing upwards.
5. Position the pistons of the LH cylinder head with the arrow pointing downwards.
6. Using the special gripping tool, insert the flexible clamps into the seat on the piston, taking care to make sure that the reference indication on the flat surface is facing upwards.

CRANKSHAFT

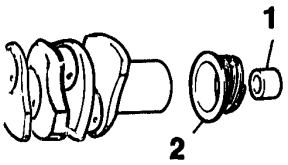

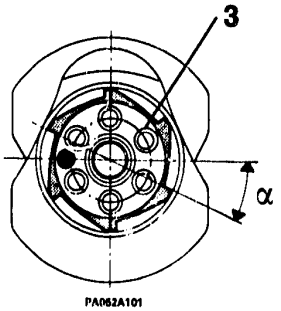

Rear crankshaft gear orientation	α = 24° ± 2°

1. Fit the rear crankshaft bush using special tool No. 1.821.104.000 (A.3.0450).
2. Heat up the oil pump - distributor drive gear to 150°.
3. Fit the gear to the crankshaft so that the flywheel centering dowel axis makes the angle shown with the front face of a gear tooth.

ENGINE ASSEMBLY COMPLETE

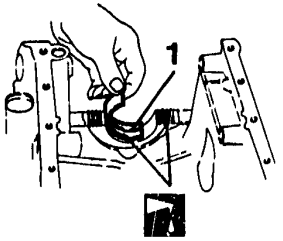

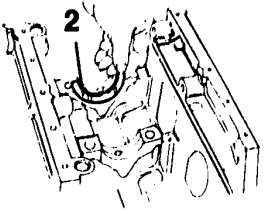

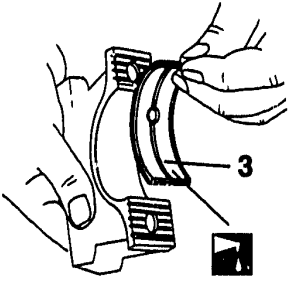

PA063A101

1. Place the upper main bearing shells.
2. Insert the split thrust washers in the housing machined in the third main bearing. The thrust washers must be mounted making sure that the oil ducts face the crankshaft shoulder.
   - Fit crankshaft in position in the main bearings.
3. Fit the lower main bearing shells in their caps.

ENGINE ASSEMBLY COMPLETE (Continued)

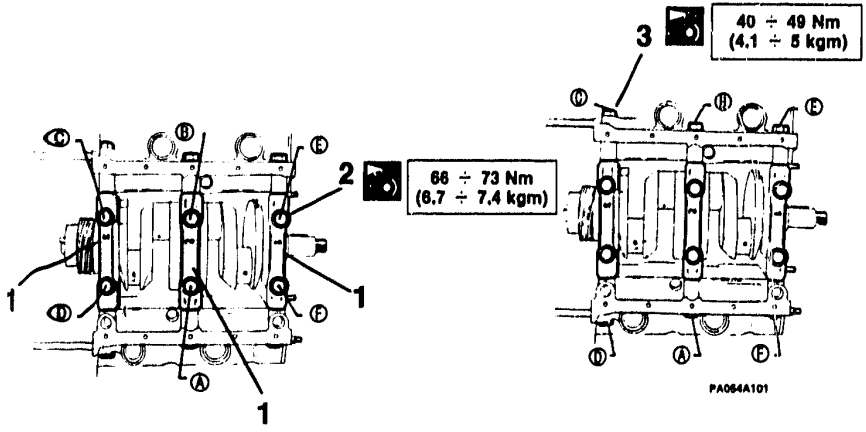

1. Fit the main bearing caps to their matching block halves in the correct positions (see marking) and screw on the well-oiled bolts without tightening them.
2. Tighten the bolts holding the main bearing caps to the main bearing supports in two or three operations, working in the sequence shown (A to F).
3. Then tighten the bolts holding the maion bearing caps to the block, in two or three operations and working in the sequence shown (A to F).

- Turn the crankshaft by hand to make sure that there is no drag.

ENGINE ASSEMBLY COMPLETE (Continued)

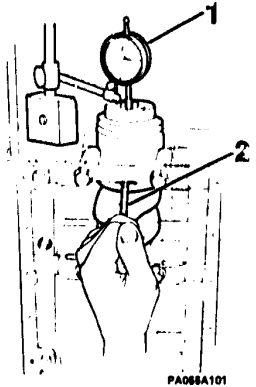

PA068A101

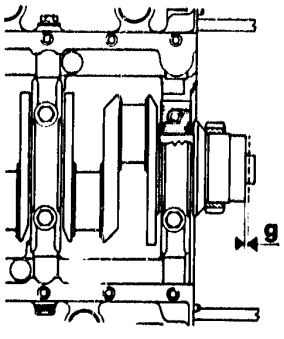

PA068A102

Crankshaft end float	g = 0,35

- Check crankshaft end float as follows:

1. Set up a dial gauge reading to hundredths of millimetres, placing the feeler in contact with the crankshaft, parallel to its axis.
2. Using a screwdriver, lever the crankshaft axially and check that the end-float "g" lies within the limits shown.

BLOCK END PLATE

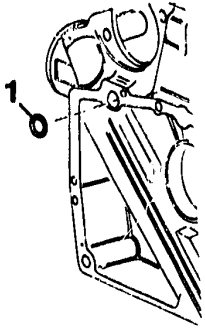

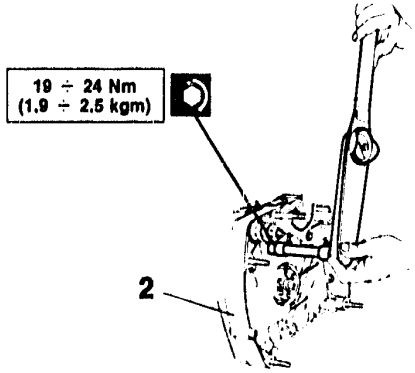

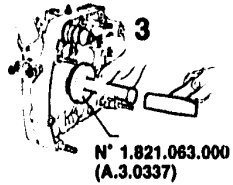

PA0616A101

1. Insert the sealing ring in the main oil duct of the block end plate.
2. Mount the end plate fitted with its gasket to the block. Tighten the end plate bolts.
3. Carefully fit the rear crankshaft oil seal in the correct position using special tool No. 1.821.063.000 (A.3.0337).

FLYWHEEL

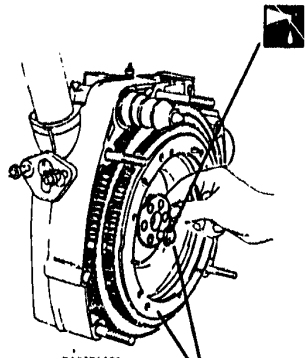

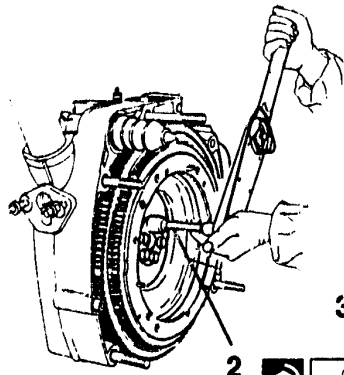

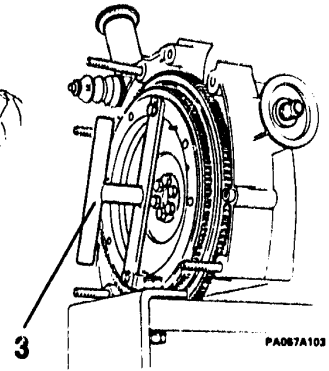

93 ÷ 105 Nm
(9,8 ÷ 10,7 kgm)

- Lubricate the mounting bolts with engine oil.
1. Position the flywheel on the crankshaft and screw in the mounting bolts complete with locking washers, without tightening them.
- Use special tool No. 1.820.059.000 (A.2.0378) to prevent theshaft from rotating.
2. Tighten the screws to the correct torque.
3. Fit a tool to the flywheel to allow its rotation, and remove the previously fitted tool No. 1.820.059.000 (A.2.0378).

PISTONS AND CONNECTING RODS

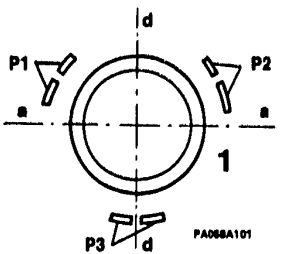

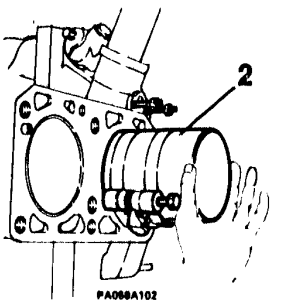

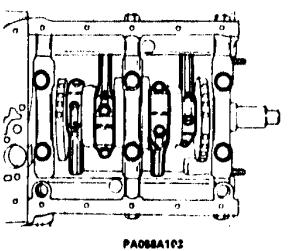

P1 position the upper piston ring
P2 position the lower piston ring
P3 position the oil-scraper ring
aa gudgeon pin axis
dd thrust axis

1. Arrange the rings in their grooves so that the gaps are equally spaced around the piston circumferance.

- Fit the previously-selected shells to the big-end bearings and caps.

2. Insert pistons with their respective connecting rods into the corresponding cylinders using the universal tool.

⚠ Pistons must be inserted with the arrows on their crowns pointing in the direction of rotation; upwards for the RH bank pistons and downwards for the LH bank pistons.
Big-end caps should be positioned so that their identification numbers can be read.

PISTONS AND CONNECTING RODS (Continued)

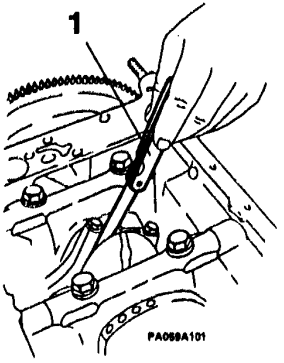

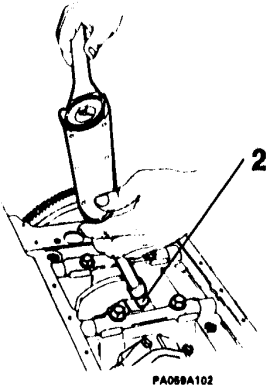

43 ÷ 48 Nm (4.4 ÷ 4.9 kgm)

Big-end float	–

- Position the main caps and bearing halves.

1. Check float between crankweb shoulder and big-end using feeler gauges.

2. Turn the crankshaft to gain access to the big-end cap bolts and tighten them to the correct torque.

FRONT BLOCK PLATE AND FRONT ENGINE MOUNTING

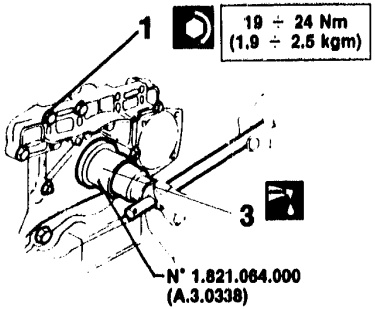

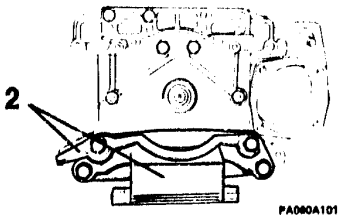

1. Fit the front engine plate complete with gasket to the block and tighten the nuts and bolts to the correct torque.
2. Fit the front engine mounting and pulley guard to the front plate.
3. Force the crankshaft oil seal into position using special tool No. 1.821.064.000 (A.3.0338). Lubricate the sealing lip and the working surface of the ring with engine oil before mounting.

CRANKSHAFT SPROCKETS AND PULLEYS, AND WATER PUMP

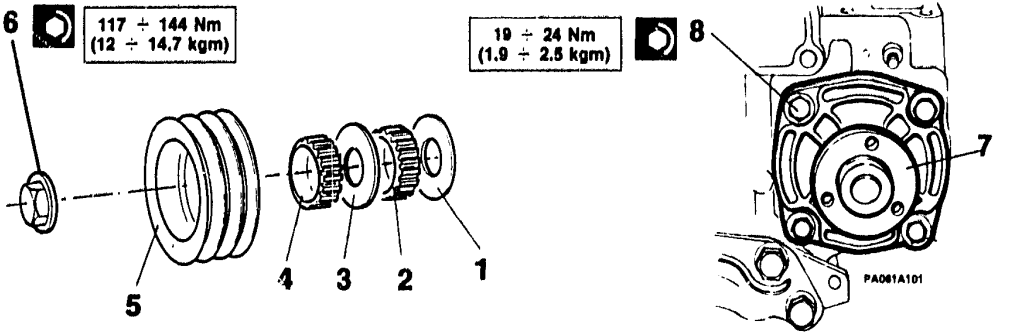

1. Slide the belt guide disk onto the shaft.
2. Fit the drive sprocket for the LH cylinder head timing belt.
3. Fit on the spacer.
4. Fit the drive sprocket for the RH cylinder head timing belt.
5. Fit on the auxiliary drive pulley.
6. Lock the flywheel and tighten the retaining nut to the specified torque.
- Place a new gasket on the water pump.
7. Mount the pump on the block without its pulley.
8. Screw in and tighten the bolts with their washers to the specified torque.

OIL PUMP

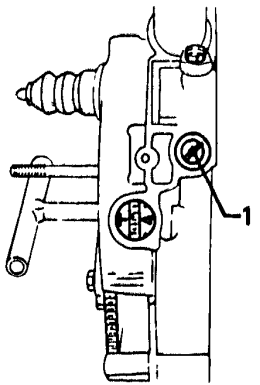

PA062A102

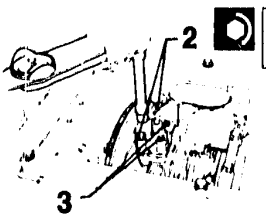

19 ÷ 24 Nm
(1,9 ÷ 2,5 kgm)

8 ÷ 10 Nm
(0,8 ÷ 1 kgm)

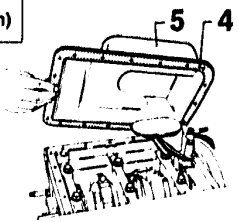

NA062A101

1. Turn the crankshaft to bring piston no. 1 to top dead centre in ignition phase.
2. Fit the oil pump to the engine end plate and tighten the bolts to the specified torque.
3. Tighten the bolts holding the pump body to the support to the specified torque.
4. Replace the gasket, applying the specified joint compound evenly.
   Remove all traces of the old sealer before applying the new.
5. Replace the oil sump.

DISTRIBUTOR

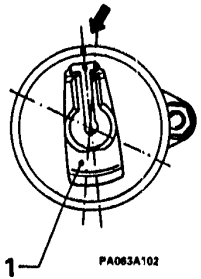

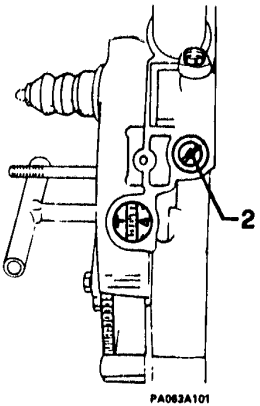

- Mount the distributor on the engine end plate.

1. Rotate the distributor shaft so that the wiper arm corresponds to the reference mark on the distributor body.
   The wiper arm must point towards cylinder No. 1.
   This is the ignition position for cylinder No. 1 and corresponds to the correct alignment of oil pump and distributor drive shafts.
2. If necessary correct any misalignment between wiper arm and distributor body reference mark by rotating the body itself then tighten down the distributor lock nut on the end plate.

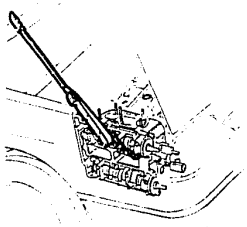

ELECTRONIC-INJECTION ENGINE (16 VALVES)

- ENGINE REASSEMBLY (Continued)
- REMOVING AND REFITTING CYLINDER HEAD WITH ENGINE ON VEHICLE

ENGINE REASSEMBLY

REFITTING CYLINDER HEADS ..... 01 - 93
ADJUSTING TIMING ..... 01 - 95
REPLACING TIMING BELTS ..... 01 - 98

REMOVING AND REFITTING CYLINDER HEAD WITH ENGINE ON VEHICLE

PRELIMINARY OPERATIONS ..... 01 - 100
REMOVAL OF UNDERBODY COMPONENTS ..... 01 - 101
REMOVAL OF ENGINE COMPARTMENT COMPONENTS ..... 01 - 102

ENGINE REASSEMBLY (Continued)

REFITTING CYLINDER HEADS

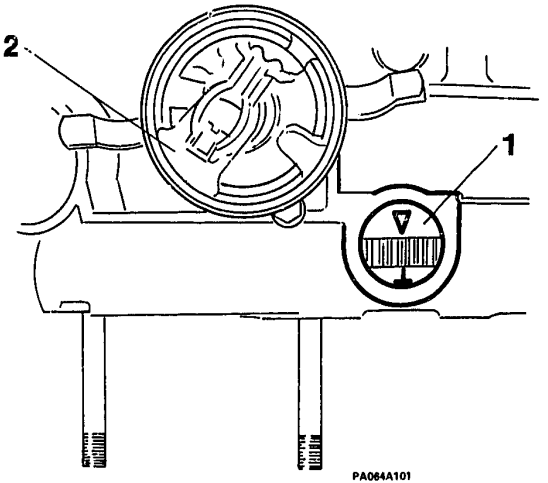

- Refit the cylinder heads to the block as follows:

1. Turn the crankshaft until the piston reaches top dead centrein cylinder No. 1 in ignition phase; this position is reached when the "T" mark on the flywheel rim is seen to coincide with the index on the engine end plate.
2. Make sure that the distributor wiper arm corresponds with the first cylinder ignition point.

REFITTING CYLINDER HEADS (Continued)

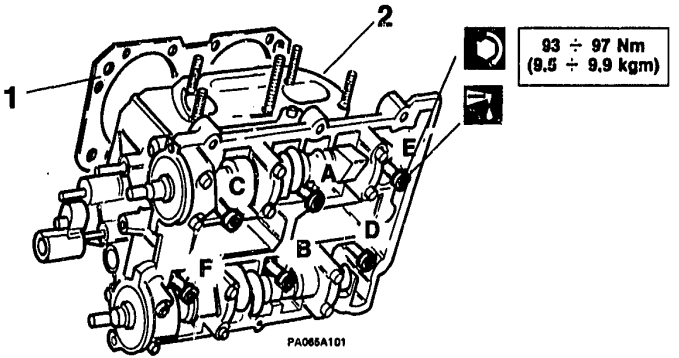

ATTENTION:
Make sure the camshafts are positioned neutrally.

1. Place the gasket in position.
2. Fit the cylinder heads to the block.

Oil the six cylinder head bolts and screw them down to the specified torque in two or three operations, to the sequence shown (A to F).

If working on the vehicle when the engine is in place the tightening torques will vary when using the spanner extension N° 1.822.101.000 (see TECHNICAL CHARACTERISTICS AND SPECIFICATIONS)

ADJUSTING TIMING

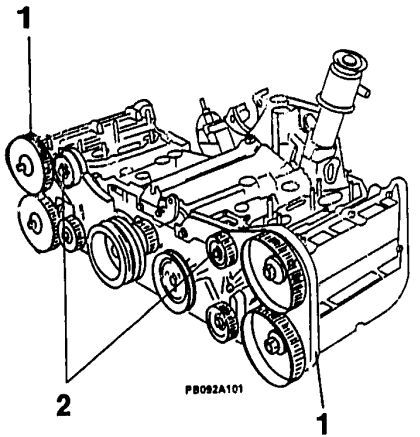

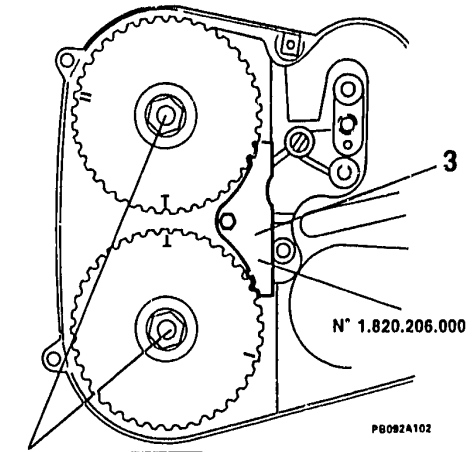

63 ÷ 70 Nm
(6,4 ÷ 7.1 kgm)

1. Install the timing belt rear guards.
2. Mount the belt-tensioner units on the dowels in the block.
3. Fit the timing belt drive sprockets and tighten the retaining nuts to the specified torque, locking sprocket movement with special tool No. 1.820.206.000.

ADJUSTING TIMING (Continued)

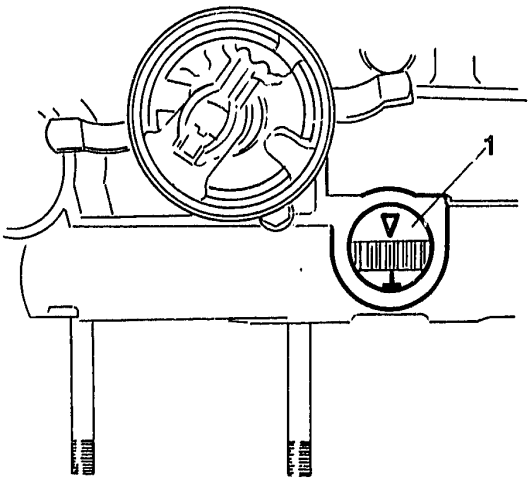

1. Rotate the crankshaft to bring piston No. 1 to T.D.C. in ignition phase; this position is ensured when the "T" mark on the flywheel rim lines up with the index on the end plate.

– Rotate the engine shaft clockwise (seen from the rear end) by about 45° to lower the pistons in cylinders 1 and 2 in order to prevent the valves from striking the pistons when the camshafts are rotated.

⇩

ADJUSTING TIMING (Continued)

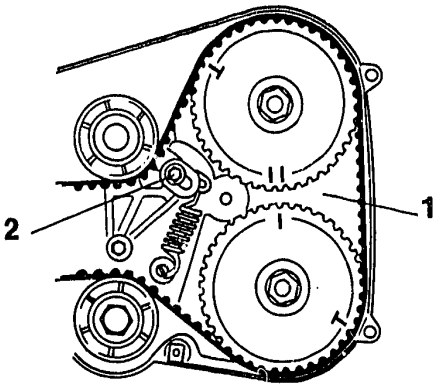

1. Position the LH cylinder head camshafts so that the space between the two marks on the intake camshaft sprocket coincides with the mark on the exhaust camshaft sprocket.
- Realign the "T" mark on the flywheel rim with the index (piston No. 1 at T.D.C. in ignition phase), and fit the LH timing belt to the sprockets while maintaining the shafts in that position.
2. Slacken the belt-tensioner lock nut so that the spring may exert full pressure on the belt.
- Repeat the preceeding operations to adjust the timing of the right-hand head.
- Turn the crankshaft a few times in its working rotation direction to allow the belts to settle into their final positions.

REPLACING TIMING BELTS

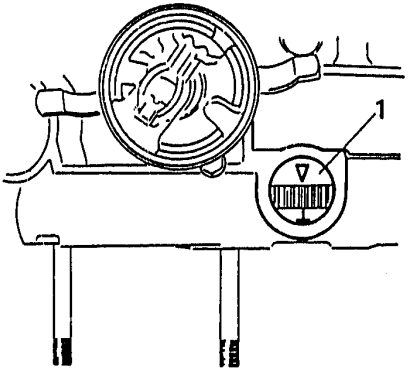

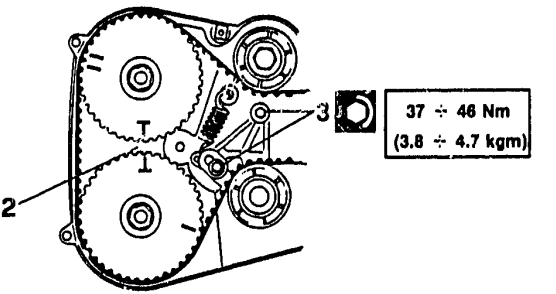

- Rotate the crankshaft until the piston of cylinder number 1 is at TDC in the firing phase (notch T on the flywheel).

1. Further rotate the crankshaft in its normal direction of rotation until the reference notch ▼ on the flywheel is aligned with the reference mark.
2. Check that the two pulleys are in line with the "T" marks (camshafts of the right-hand head in the resting position: no cam engaged).
3. Loosen the nuts of the right-hand belt tensioner and tighten them to the specified torque.

During the operation avoid pressing on the belt which may alter its loading.

REPLACING TIMING BELTS (Continued)

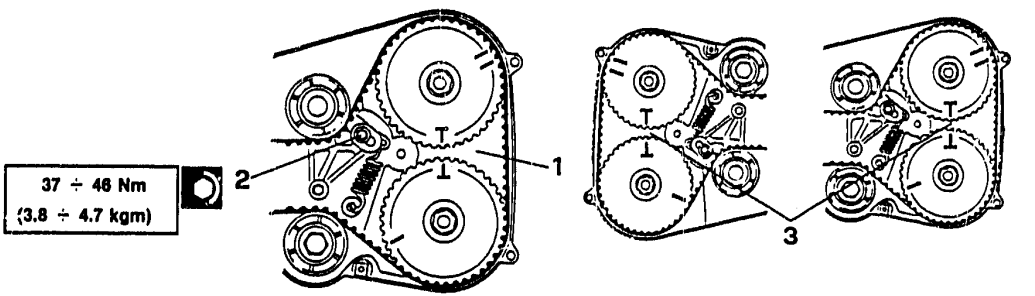

- Starting from the position corresponding to the notch "▼" on the flywheel, rotate the crankshaft one complete revolution until the notch ▼ is once again in line with the reference mark (camshafts of the left-hand head in the resting position: no cam engaged).
1. Check that the two pulleys are aligned with the "T" marks.
2. Loosen the two nuts of the belt tensionor and tighten them to the specified torque.

During the operation avoid pressing on the belt tensioner which may alter its loading.

- After completing the operations on the right and left-hand heads, rotate the crankshaft until the piston in cylinder number 1 is at TDC in the firing phase (T mark on the flywheel).
3. Check that the timing marks on the pulleys are in line.

REMOVING AND REFITTING CYLINDER HEAD WITH ENGINE ON VEHICLE

PRELIMINARY OPERATIONS

- position the vehicle on the inspection ramp
- remove the hood (see unit 56)
- disconnect the battery negative lead
- raise the vehicle
- drain the engine cooling system (see unit 00)
- drain the engine oil (see unit 00)

REMOVAL OF UNDERBODY COMPONENTS

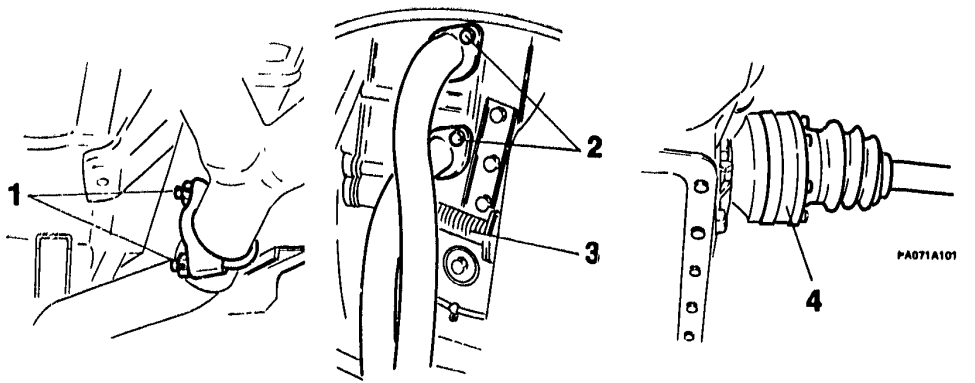

1. Slacken the exhaust clamp nuts at the joint between first and second exhaust system sections.
2. Disconnect the manifolds from the cylinder heads and remove the first exhaust section.
3. Remove the two flexible oil pipes from the heads.
4. Disconnect the LH drive shaft from the gearbox stub.

REMOVAL OF ENGINE COMPARTMENT COMPONENTS

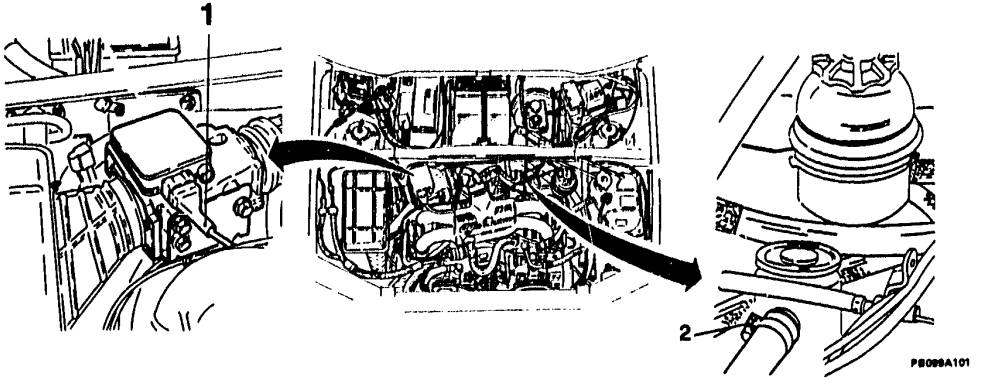

- Lower the vehicle.

1. Disconnect the electric cable from the air flow meter.

2. Slacken the retaining clip on the breather return pipe (separator end).

REMOVAL OF ENGINE COMPARTMENT COMPONENTS (Continued)

1. Slacken the corregated pipe clip.
2. Unclip the air filter cover.
3. Undo the three screws holding the air-flow meter.
4. Remove the air-flow meter, air filter and corrugated pipe.
5. Extract the filter and remove the air filter support by unscrewing the two retaining screws.
6. Remove the air-flow meter bracket and relative rubber support.

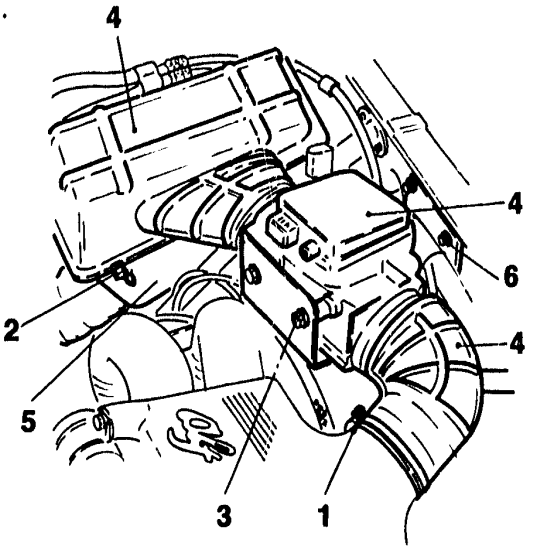

PA073A161

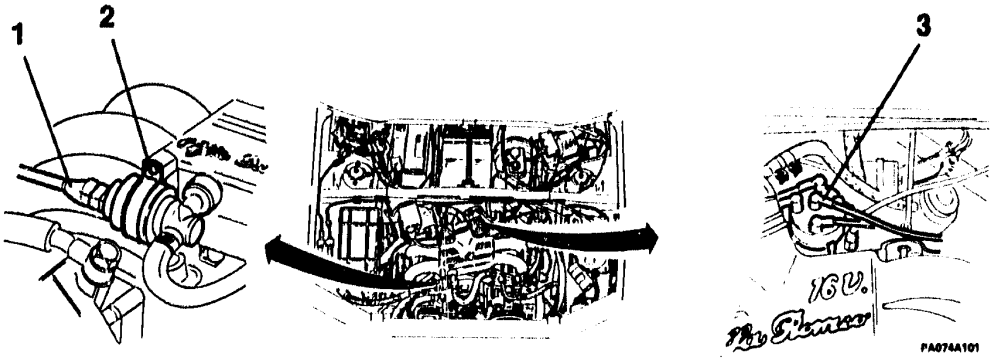

1. Disconnect the electric cable from the constant idle speed actuator.
2. Undo the mounting screw and remove the actuator.
3. Remove the distributor cap and relative HT leads.

REMOVAL OF ENGINE COMPARTMENT COMPONENTS (Continued)

1. Remove the accelerator cable and relative bracket.
2. Remove the pressure regulator and impulse damper bracket.
3. Slacken the 4 lower manifold clips and remove the air reservoir box.

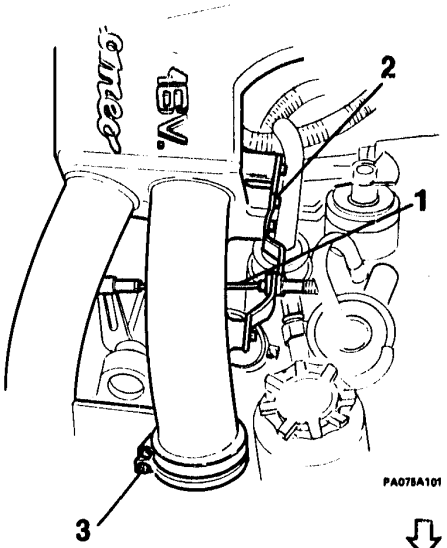

REMOVAL OF ENGINE COMPARTMENT COMPONENTS (Continued)

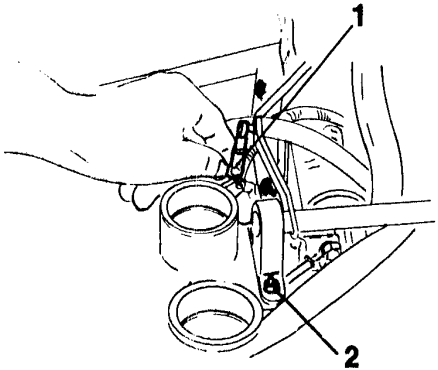

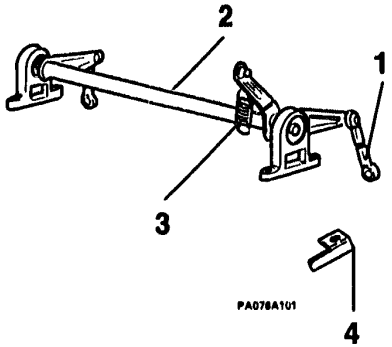

1. Disconnect the two link rods from the accelerator shaft.
2. Unscrew the 4 nuts and remove the accelerator shaft.
3. Recover the spring.
4. Recover the shaft.

REMOVAL OF ENGINE COMPARTMENT COMPONENTS (Continued)

- Remove the front grille (see unit 76).
1. Disconnect the power leads to the electric cooling fan.
2. Disconnect the electric lead from the cooling system temperature sensor.

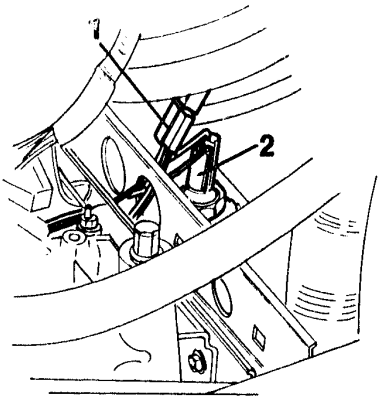

PA077A101

REMOVAL OF ENGINE COMPARTMENT COMPONENTS (Continued)

1. Slacken the clip holding the cooling hose to the thermostat valve.
2. Slacken the clip holding the cooling hose to the water pump.
3. Slacken the clip holding the cooling hose to the header tank.

- Slacken the bolt holding the radiator to the body, and remove the radiator.

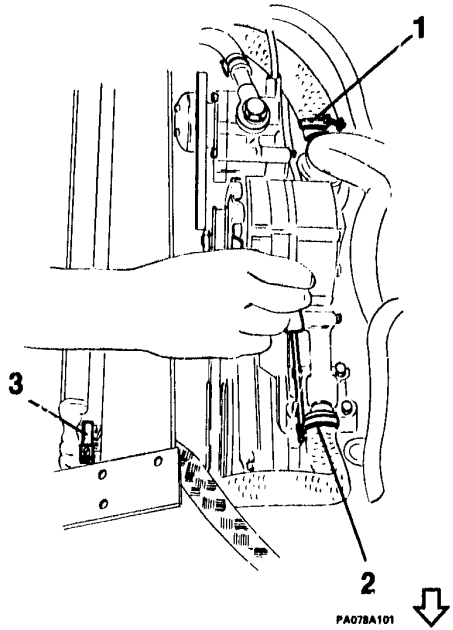

REMOVAL OF ENGINE COMPARTMENT COMPONENTS (Continued)

- Slacken the bolt holding the radiator to the body, and remove the radiator.

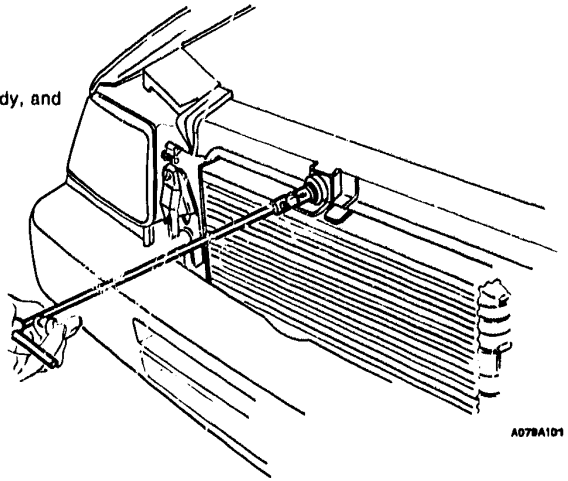



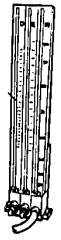

ELECTRONIC-INJECTION ENGINE (16 VALVES)

- REMOVING AND REFITTING CYLINDER HEADS WITH ENGINE ON VEHICLE (Continued)
- FLOWTESTING

REMOVING AND REFITTING CYLINDER HEADS WITH ENGINE ON VEHICLE

REMOVAL OF ENGINE COMPARTMENT COMPONENTS ..... 01 - 110

FLOWTESTING

ON THE BENCH ..... 01 - 117
IN VEHICLE ..... 01 - 118
INJECTOR TUBE ALIGNMENT AND SYNCHRONISING ..... 01 - 120

REMOVING AND REFITTING CYLINDER HEADS WITH ENGINE ON VEHICLE

REMOVAL OF ENGINE COMPARTMENT COMPONENTS (Continued)

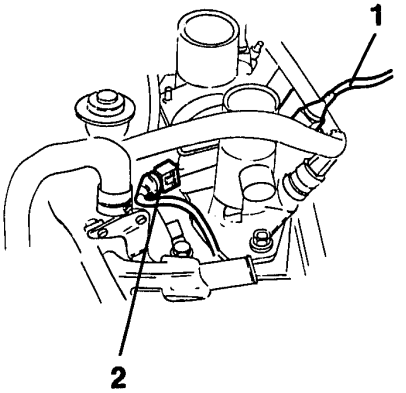

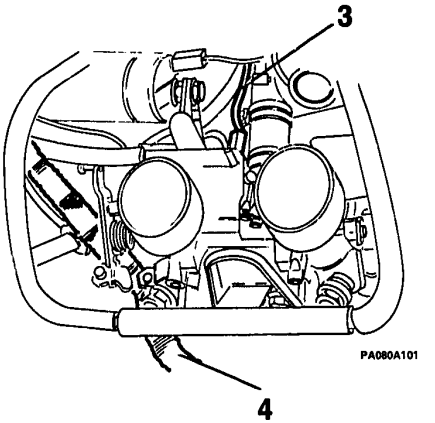

1. Disconnect the electrical cables from the electroinjectors.
2. Disconnnect the electric cable from the engine coolant NTC sensor.
3. Disconnect the temperature light lead.
4. Remove the corrugated pipe from the cabling.

REMOVAL OF ENGINE COMPARTMENT COMPONENTS (Continued)

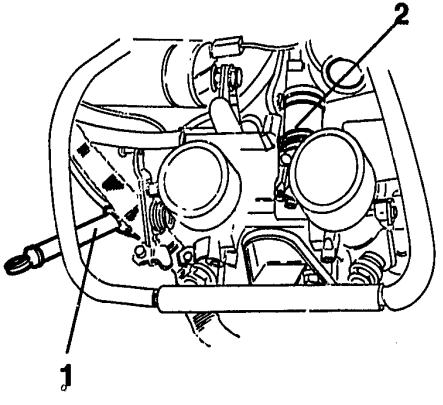

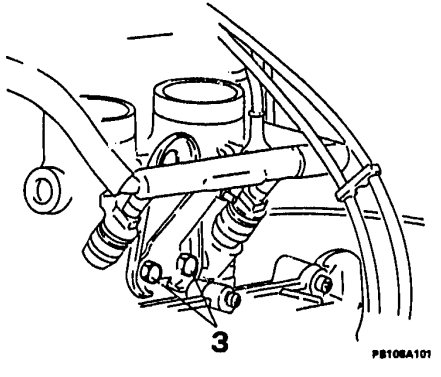

1. Unscrew the nut securing the dipstick support bracket to the engine block and remove the dipstick.
2. Slacken the cooling hose clips.
3. Loosen the screws securing the fuel supply hose.

REMOVAL OF ENGINE COMPARTMENT COMPONENTS (Continued)

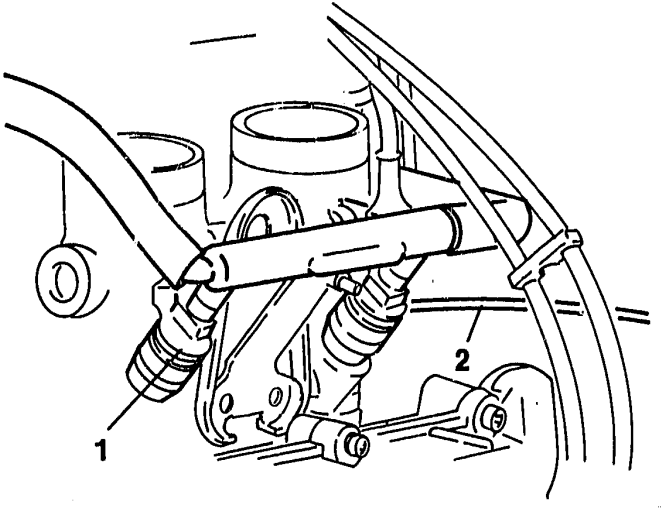

1. Withdraw the electroinjectors together with the fuel supply hose.
2. Disconnect the brake servo vacuum line.

REMOVAL OF ENGINE COMPARTMENT COMPONENTS (Continued)

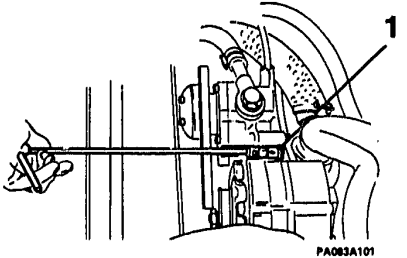

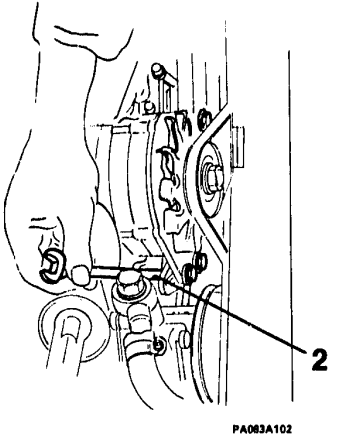

1. Slacken the 3 screws retaining the power steering pump and disconnect the belt.

2. Slacken the 3 alternator mounting bolts and disconnect the belt.

⇩

REMOVAL OF ENGINE COMPARTMENT COMPONENTS (Continued)

- Remove the two front timing belt protection covers
- Bring piston No.1 up to ignition phase by turning until the "T" on the flywheel coincides with the relative arrow and the camshaft sprocket marks coincide.
- Slacken the belt-tensioners and remove the belt.
- Disconnect the spring from the belt-tensioners and remove them.
- Remove the rollers.

1. Insert the sprocket lock tool No. 1.820.206.000.

- Remove the camshaft sprocket.
- Remove the two inside guards.

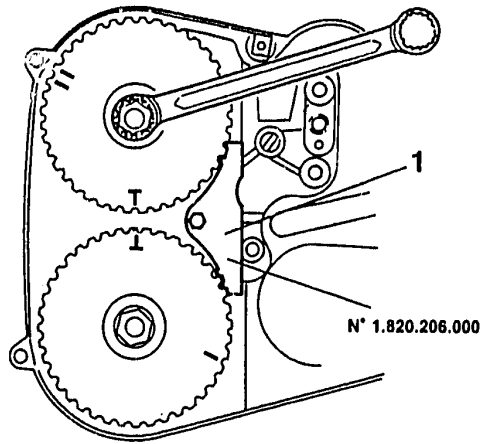

REMOVAL OF ENGINE COMPARTMENT COMPONENTS (Continued)

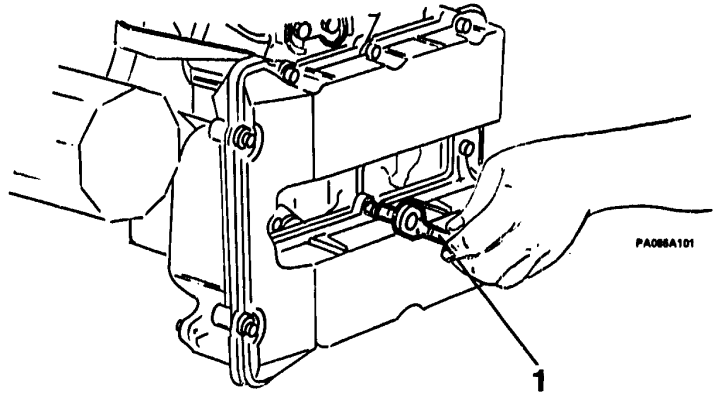

- Remove the two engine bay reinforcing struts.

1. Remove the camshaft covers using a specially shortened socket wrench.

⇩

REMOVAL OF ENGINE COMPARTMENT COMPONENTS (Continued)

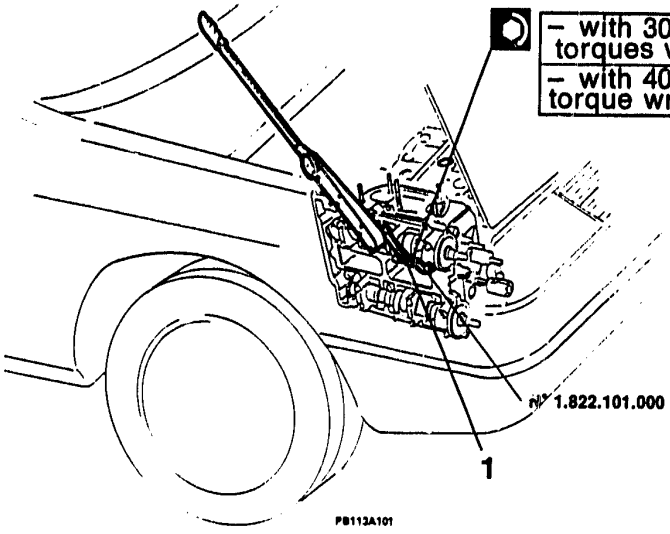

- Remove the cylinder head bolts using spanner No. 1.822.101.000 and appropriate leverage.
- Remove the cylinder heads from the engine bay with due care.

1. When reassembling, tighten the bolts to the torque values specified.

If working with the engine on a bench the tightening torques will vary (see TSN).

FLOWTESTING

ON THE BENCH

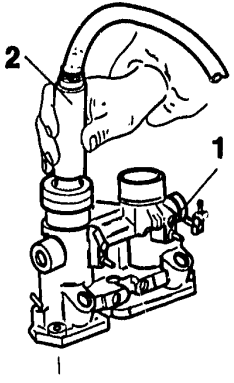

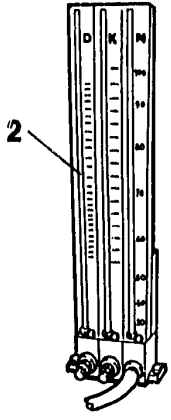

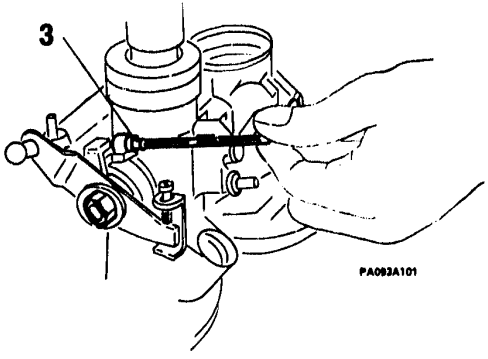

1. Remove the seals on the by-pass screws and screw them fully home.
2. Set the flowmeter to read on scale "K".
3. Adjust the throttle regulating screw to obtain a reading of 120 ÷ 130.

- Once the throttles have been adjusted, open (unscrew) the by-pass screws and check for flow readings of 185 ÷ 190 on scale "N".

FLOWTESTING (Continued)

IN THE VEHICLE

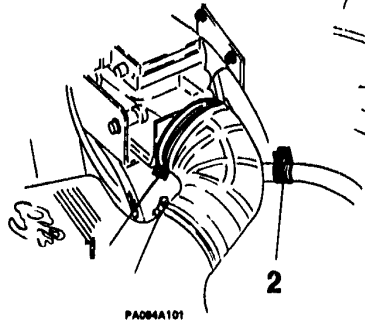

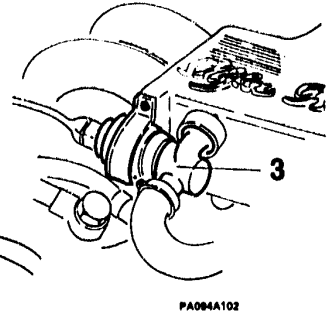

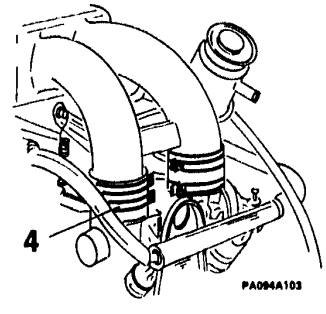

- Disconnect the battery negative lead.
1. Slacken the hose clip holding the corrugated pipe to the air-flow meter.
2. Slacken the breather return pipe clip.
3. Remove the constant idling actuator from the air box.
4. Loosen the four lower clamps securing the intake box to the throttle bodies and remove the intake box.

FLOWTESTING
IN THE VEHICLE (Continued)

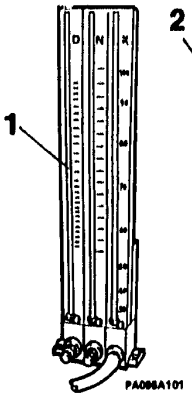

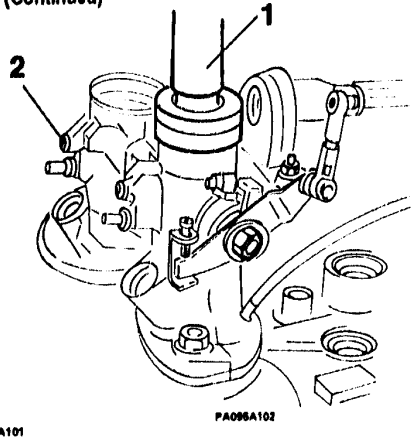

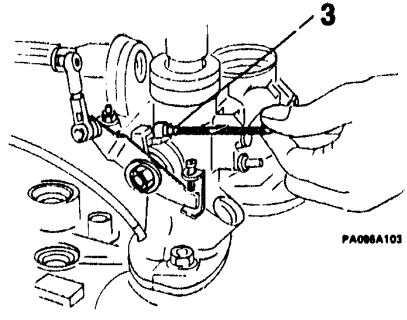

1. Using a flowmeter take measurements for each injector tube. Make sure that flows fall between 185 ÷ 190 on the N scale.
   - If the specified values are not read, proceed as follows:
2. Remove the seals from the by-pass screws.
   - With the flowmeter set to scale K, make sure that flow values lie between 120 ÷ 130.
3. If these values are not read, adjust the throttle screw.
   - With the throttles adjusted, open the by-pass passages until flow values of 185 ÷ 190 are reached on the N scale.

FLOWTESTING (Continued)

INJECTOR TUBE ALIGNMENT AND SYNCHRONISING

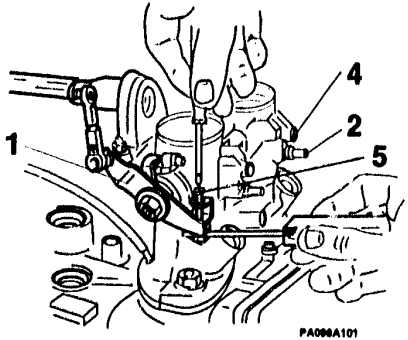

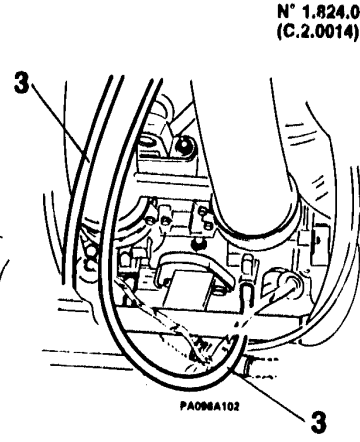

N° 1.824.002.003
(C.2.0014)

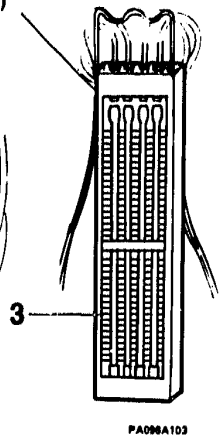

1. Check the play in the two slackened levers. Recommended value: 1mm.
2. Slacken the vacuum outlets.
3. Connect the outlets to vacuum gauge No. 1.824.002.000 (C.2.0014).
4. With the engine at idle speed check that the difference between cylinders does not exceed 25 mmHg and if necessary adjust the by-pass screws.
   - If there is a pressure difference between cylinders on the same bank of over 25 mmHg, despite the adjustment, substitute that injector tube.
5. Accelerate gently a few times and check that the manometer columns shift simultaneously; in the event of lack of synchronism, adjust the regulating screws on the slackened levers.

ELECTRONIC-INJECTION ENGINE (16 VALVES)

TSN

- TECHNICAL SPECIFICATIONS AND NOTES

TECHNICAL SPECIFICATIONS AND NOTES

ENGINE DATA ..... 01 - 121
BLOCK ..... 01 - 122
CRANKSHAFT ..... 01 - 123
MAIN BEARING SHELLS ..... 01 - 125
THRUST HALF-WASHERS ..... 01 - 125
FLYWHEEL ..... 01 - 126
PISTONS ..... 01 - 127
GUDGEON PINS ..... 01 - 128
PISTON RINGS ..... 01 - 128
CONNECTING RODS ..... 01 - 129
BIG-END BEARING SHELLS ..... 01 - 129
CYLINDER HEADS ..... 01 - 130
VALVES ..... 01 - 131
VALVE SEAT REGRINDING ALLOWANCES ..... 01 - 131
SPRINGS ..... 01 - 132
CAMSHAFT BEARINGS AND TAPPETS ..... 01 - 132
CAMSHAFT ..... 01 - 133
ASSEMBLY CLEARANCES AND INTERFERENCES ..... 01 - 134
HEATING TEMPERATURES ..... 01 - 135

TECHNICAL SPECIFICATIONS AND NOTES

ENGINE DATA

DATA		30746 - 30747
Type		Otto cycle, 4/stroke
Cylinders		4 horizontally opposed
Fuel system		electronic ignition
Bore - stroke Cubic capacity	mm cm^3	87 × 72 1712
Combustion chamber volume	cm^3	47,5
Compression ratio		10:1
Maximum power DIN	kW (CV)	98 (137) 95 (132) Δ at 6500 RPM.
Maximum torque DIN	Nm (Kgm)	157 (16,4) 151 (15,8) Δ at 4600 RPM.

(Δ) With catalytic converter.

BLOCK

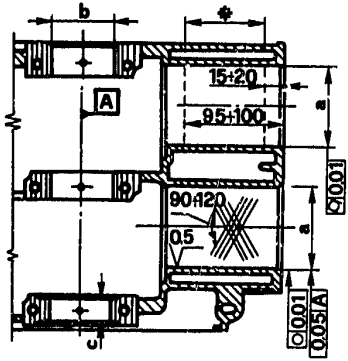

PA117A101

REFERENCE DIMENSIONS			ENGINES 30746 – 30747
Cylinder bore diameter "a" mm	Standard	cl. A	87,000 ÷ 87,010
		cl. B	87,010 ÷ 87,020
		cl. C	87,020 ÷ 87,030
		cl. D	87,030 ÷ 87,040
		cl. E	87,040 ÷ 87,050
	Oversize	1ª	87,200 ÷ 87,210
		2ª	87,400 ÷ 87,410
		3ª	87,600 ÷ 87,610
Maximum alignment error between cylinder and crankshaft axes. mm			0,05
Max. cylinder ovality and taper mm	As in drawing		0,01
	Max		0,02
Cylinder surface finish µm			(0,5 ÷ 1)
Cylinder lapping pattern			90° ÷ 120°
Main bearing diameter "b" mm			63,663 ÷ 63,673
Rear main bearing thickness "c" mm			23,68 ÷ 23,73

* Area for dimensional checks

CRANKSHAFT

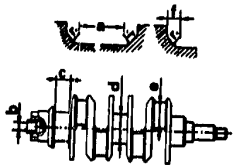

Units: mm

REFERENCE DIMENSIONS			ENGINES 30746 – 30747
Crankshaft journal diameter "d"	Standard	Blue	59,944 ÷ 59,954
		Red	59,954 ÷ 59,964
Crankpin journal diameter "e"	Standard	Blue	49,984 ÷ 49,992
		Red	49,992 ÷ 50,000
Rear crankshaft journal "c"			28,51 ÷ 28,55
Crankweb shoulder radius R	Front and cent. crankshaft journals		1,8 ÷ 2 ·
	Rear crankshaft journals		1,5 ÷ 1,7
	Crankpin journals		3,3 ÷ 3,5
Crankweb shoulder radius length "f"	Rear crankshaft journal		2,11 ÷ 2,81
Cylindrical section length "a"	Central crankshaft journals		24,05 ÷ 24,15
	Rear crankshaft journals		24,22 ÷ 24,32

(CONTINUED)

CRANKSHAFT (CONTINUED)

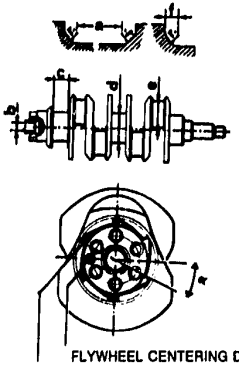

Units: mm

REFERENCE DIMENSIONS		ENGINES 30746 – 30747
Crankshaft and crankpin journals surface finish μm		0,16
Crankshaft and crankpin journals, ovality X-Y and taper A-B	As drawing	0,006
	Maximum	0,02
Maximum parallelism error between crankshaft and crankpin journals		0,015
Maximum eccentricity between crankshaft journals		0,02
Maximum deviation between crankpin and main bearing axes		0,25
Maximum perpendicular alignment error between crankwebs and crankshaft axis		0,03
Rear crankshaft bush diameter "b"		16,065 ÷ 16,080
Rear crankshaft gear orientation "α" (Oil pump/distributor drive)		24° ± 2°

MAIN BEARING SHELLS



PA120A101

Units: mm

REFERENCE DIMENSIONS		ENGINES 30746 – 30747
Thickness "a"	Red	1,832 ÷ 1,838
	Blue	1,836 ÷ 1,842

THRUST HALF-WASHERS

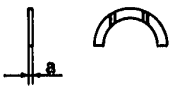

PA120A102

Units: mm

REFERENCE DIMENSIONS	ENGINES 30746 – 30747
Thickness "a"	2,311 ÷ 2,362

FLYWHEEL

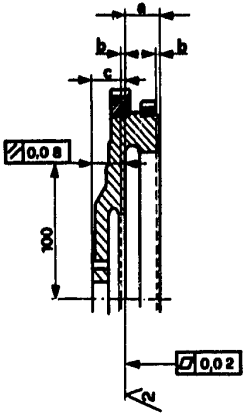

PA121A101

Units: mm

REFERENCE DIMENSIONS		ENGINES 30746 – 30747
Machining allowances	a	24,0 ÷ 24,2
	b	≤ 0,2
	c	≥ 21,15
Maximum parallelism error between clutch driven-plate bearing surface and flywheel engine mating surface (measured on a 100 mm radius)		0,08
Maximum flatness error for clutch driven-plate bearing surface		0,02
Surface finish for clutch driven-plate bearing surface	µm	2

Note: Metal removed in machining, dimension "b", must be the same for both the clutch driven-plate bearing surface and the clutch pressure plate cover mounting surface, so that dimension"a" remains constant. Dimension "c" must not fall below the value shown.

PISTONS

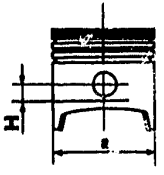

PA122A101

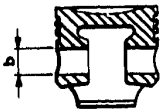

PA122A102

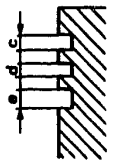

PA122A103

Units: mm

REFERENCE DIMENSIONS			ENGINES 30746 – 30747 Mondial (1)	Borgo (2)
Piston diameter "a" (to be measured at right angles to the gudgeon-pin axis at distance "H" from it)	Standard	Class A (Blue)	86,950 ÷ 86,960	86,960 ÷ 86,970
		Class B (Pink)	86,960 ÷ 86,970	86,970 ÷ 86,980
		Class C (Green)	86,970 ÷ 86,980	86,980 ÷ 86,990
		Class D (Yellow)	86,980 ÷ 86,990	86,990 ÷ 87,000
		Class E (White)	86,990 ÷ 87,000	87,000 ÷ 87,010
	Oversize	1ª	87,144 ÷ 87,160	87,150 ÷ 87,170
		2ª	87,344 ÷ 87,360	87,350 ÷ 87,370
		3ª	87,544 ÷ 87,560	87,550 ÷ 87,570
First compression ring groove height "c"			1,535 ÷ 1,555	1,515 ÷ 1,535
Second compression ring groove height "d"			1,775 ÷ 1,795	
Oil scraper-ring groove height "e"			3,015 ÷ 3,035	
Gudgeon-pin bore in piston "b"			21,004 ÷ 21,008	

(1) H = 13,9 mm (2) H = 11,5 mm

GUDGEON PINS

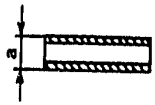

PA123A101

Units: mm

REFERENCE DIMENSIONS	ENGINES 30746 – 30747
Gudgeon pin diameter "a"	20,966 ÷ 21,000
Gudgeon pin end float	0,004 ÷ 0,012

PISTON RINGS

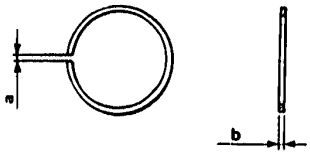

PA123A102

Units: mm

REFERENCE DIMENSIONS		ENGINES 30746 – 30747
Ring thickness "b"	First ring	1,478 ÷ 1,490
	Second ring	1,728 ÷ 1,740
	Oil scraper ring	2,978 ÷ 2,990
Ring gap (1) "a"	First ring	0,30 ÷ 0,50
	Second ring	0,30 ÷ 0,50
	Oilscraper ring	0,25 ÷ 0,50
	Maximum gap for each ring	1

(1) As measured inside measurement ring or cylinder bore

CONNECTING RODS



PA124A101

Units: mm

REFERENCE DIMENSIONS	ENGINES 30746 – 30747
Small end bush bore "a"	21,007 ÷ 21,015
Big end bore "b"	53,696 ÷ 53,708

BIG-END BEARING SHELLS



PA124A102

Units: mm

REFERENCE DIMENSIONS		ENGINES 30746 – 30747
Big-end shell thickness "a"	Blue	1,830 ÷ 1,836
	Red	1,826 ÷ 1,832

CYLINDER HEADS

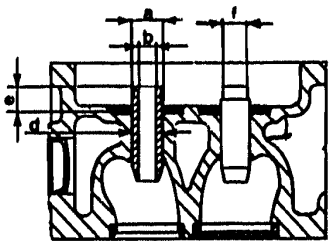

Units: mm

REFERENCE DIMENSIONS			ENGINES 30746 – 30747
Valve guide seat bore "d"			12,000 ÷ 12,018
Valve guide outside diameter "a"	Intake	Standard	12,040 ÷ 12,051
		Oversize	12,240 ÷ 12,251
	Exhaust	Standard	12,050 ÷ 12,068
		Oversize	12,250 ÷ 12,268
Valve guide bore "b"			7,000 ÷ 7,015
Valve oil seal seating diameter "f"			9,75 ÷ 9,85
Valve guide projection "e"			10,35 ÷ 10,65
Maximum parallelism error between cylinder head machined surfaces			0,05
Maximum flatness error, cylinder head joint face			0,03
Surface finish, cylinder head joint face μm			1,6

(1) When skimming heads with hemispherical combustion chambers, the operation must be performed to both heads on the same engine.

VALVES

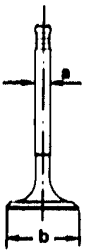

PA126A101

Units: mm

REFERENCE DIMENSIONS		ENGINES 30746 - 30747
Valve stem diameter "a"	Intake	6,965 ÷ 6,98
	Exhaust	
Valve head diameter "b"	Intake	31,8 ÷ 32,0
	Exhaust	25,8 ÷ 26,0

VALVE SEAT REGRINDING ALLOWANCES

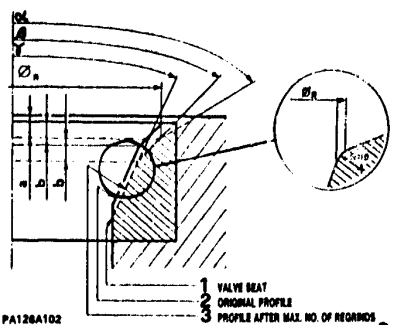

PA126A102

Units: mm

REFERENCE DIMENSIONS		ENGINES 30746 - 30747
Reference diameter "ØR"	Intake	31,0
	Exhaust	24,5
Maximum regrind allowance for upper valve seat band "a"	Intake	0,4
	Exhaust	1,1
Maximum regrind allowance for valve seat contact band	Intake	R = 0,9
	Exhaust	b = 1,1
Maximum upper valve seating angle "α"	Intake	150°
	Exhaust	120°
Maximum valve seat contact band angle "β"		90° ± 20'
Inner valve seat angle "γ"	Intake	75°
	Exhaust	60°

SPRINGS



PA127A101

Units: mm

REFERENCE DIMENSIONS			ENGINES 30746 – 30747
Spring length with valve open "a"	Outer spring	mm	22,9
	Inner spring	mm	20,9
Spring load at length "a"	Outer spring N	(kg)	349,312 ± 9,8 (35,62 ± 1)
	Inner spring N	(kg)	321,830 ± 8,82 (32,79 ± 0,9)

CAMSHAFT BEARINGS AND TAPPETS

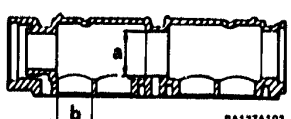

PA127A102

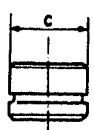

PA127A103

Units: mm

REFERENCE DIMENSIONS	ENGINES 30746 – 30747
Camshaft bearing seat diameter "a"	27,000 ÷ 27,033
Tappet housing diameter "b"	33,000 ÷ 33,025
Tappet diameter "c"	32,975 ÷ 32,959

CAMSHAFT

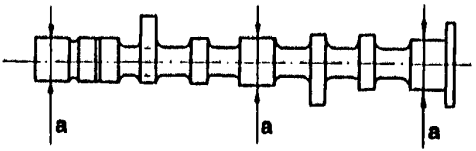

PA127A101

Units: mm

REFERENCE DIMENSIONS		ENGINES 30746 - 30747
Cam lift	Intake	9,00 * 9,50 **
	Exhaust	9,20
Camshaft journal diameter (a)		26,959 ÷ 26,980

* Outer cams ** Inner cams

ASSEMBLY CLEARANCES AND INTERFERENCES

Units: Nm (Kgm)

REFERENCE DIMENSIONS		ENGINES 30746 – 30747
Piston float	Standard	0,04 ÷ 0,06 (*) 0,03 ÷ 0,05 (**)
	Oversize	0,04 ÷ 0,06 (*) 0,03 ÷ 0,05 (**)
Piston ring float	First ring	0,045 ÷ 0,077
	Second ring	0,035 ÷ 0,067
	Oil scraper ring	0,025 ÷ 0,057
Gudgeon pin radial float		0,004 ÷ 0,012
Gudgeon pin play in small-end bush		0,007 ÷ 0,049
Crankshaft main bearing radial float		0,024 ÷ 0,056
Crankpin radial float		0,032 ÷ 0,064
Crankshaft end float		0,056 ÷ 0,248

(*) Mondial piston (**) Borgo piston

(CONTINUED)

ASSEMBLY CLEARANCES AND INTERFERENCES (CONTINUED)

Units: mm

REFERENCE DIMENSIONS		ENGINES 30746 – 30747
Camshaft bearing radial float	Front	0,02 ÷ 0,074
	Centre - Reare	0,02 ÷ 0,074
Radial clearance between tappet bucket and seat in camshaft support		0,041 ÷ 0,05
Valve radial float in guide	Intake	0,02 ÷ 0,05
	Exhaust	0,02 ÷ 0,05
Valve guide/seat interference	Intake	0,022 ÷ 0,051
	Exhaust	0,032 ÷ 0,068

HEATING TEMPERATURES

COMPONENT	ENGINES 30746 – 30747
Cylinder head heating temperature for valve seat insertion	100° ÷ 120 °C
Gear ring heating temperature for fitting to flywheel	120° ÷ 140 °C

ELECTRONIC-INJECTION ENGINE (16 VALVES)

TSN

- TECHNICAL SPECIFICATIONS AND NOTES (Continued)
- SPECIAL TOOLS

TECHNICAL SPECIFICATIONS AND NOTES
CHECKS AND ADJUSTMENTS ..... 01 - 136
FLUIDS AND LUBRICANTS ..... 01 - 137
SEALANTS AND FIXING AGENTS ..... 01 - 137
ABRASIVES ..... 01 - 137
TIGHTENING TORQUES ..... 01 - 138
SPECIAL TOOLS ..... 01 - 140

CHECKS AND ADJUSTMENTS

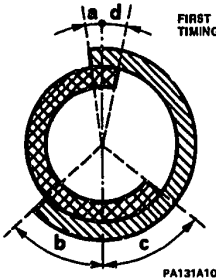

FIRST VALVE PAIR TIMINGS

PA131A101

INTAKE

EXHAUST

PA131A102

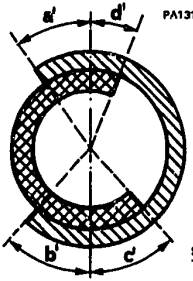

SECOND VALVE PAIR TIMING

PA131A103

VALVE TIMING ANGLES			ENGINES 30745 – 30747
Intake	Opening (before T.D.C.)	a	8°
		a'	35°
	Closing (after T.D.C.)	b	48°
		b'	48°
Exhaust	Opening (before T.D.C.)	c	52°
		c'	42°
	Closing (after T.D.C.)	d	12°
		d'	22°

FLUIDS AND LUBRICANTS

APPLICATION	TYPE	PRODUCT	Q.TY
Engine (sump and filter) for periodical replacement	OIL	AGIP NUOVO SINT 2000 10W/40	3,6 kg (4,0 l)
Engine (sump, filter, manifolds and distribution tanks)		IP SINTIAX Motor Oil 10W/40	4,1 kg (4,6 l)
		SELENIA SPECIAL FORMULA ALFA ROMEO 10W/40	

SEALANTS AND FIXING AGENTS

APPLICATION	TYPE	PRODUCT	Q.TY
Oil sump gasket, block side (1)	MASTIC	DOW CORNING Silastik 732 RTV	–
Cylinder head and block waterway core plugs (1)	MASTIC	LOCTITE 601 (green)	–

(1) Before application remove all traces of old compound and degrease surfaces with trichloroethylene or chloroethane.

ABRASIVES

APPLICATION	TYPE	PRODUCT	Q.TY
Valve and seat lapping	ABRASIVE	SIPAL AREXONS Carbosilicium for valves	–

TIGHTENING TORQUES

Units: Nm (Kgm)

COMPONENT		ENGINES 30746 – 30747
Block front and rear cover mounting bolts		19 ÷ 24 (1,9 ÷ 2,4)
Camshaft sprocket retaining nut (in oil)		63 ÷ 70 (6,4 ÷ 7,1)
Main oearing retaining bolts (in oil)		66 ÷ 73 (6,7 ÷ 7,4)
Main bearing cap bolts (in oil)		40 ÷ 49 (4,1 ÷ 5)
Flywheel mounting bolts (in oil)		94 ÷ 105 (9,6 ÷ 10,7)
Big-end bearing cap bolts		43 ÷ 48 (4,4 ÷ 4,9)
Front crankshaft pulley retaining nut		118 ÷ 144 (12 ÷ 14,7)
Drive shaft/differental shaft union bolts (in oil)		30 ÷ 35 (3,0 ÷ 3,5)
Belt-tensioner retaining nut	With engine cold	37 ÷ 46 (3,8 ÷ 4,7)
	With engine hot	29 ÷ 35 (3 ÷ 3,6)
Oil-pressure switch unit		33 ÷ 41 (3,4 ÷ 4,2)
Bolts holding frony engine cross-member and stabilizer bar to body		66,5 ÷ 83,3 (6,8 ÷ 8,5)
Bots holding stabilizer bar to strute		14,7 ÷ 23,5 (1,5 ÷ 2,4)
Cylinder head bolts		93 ÷ 97 (9,5 ÷ 9,9)

(1) If a torque wrench is used with extension No. 1.822.101.000 to be positioned as shown in the drawing, torque values become:

- with 300 mm torques wrench 65 ÷ 67 Nm (6,6 ÷ 6,8 Kgm)
- with 400 mm torque wrench 70 ÷ 73 Nm (7,1 ÷ 7,4 Kgm)

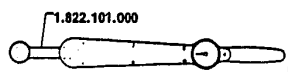

(CONTINUED)

TIGHTENING TORQUES (Cont.)

Units: Nm (Kgm)

COMPONENT	ENGINES
	30746 – 30747
Camshaft bearing block bolts	19 ÷ 24 (1,9 ÷ 2,4)
Water filler pipe screws	19 ÷ 24 (1,9 ÷ 2,4)
Oil pump mounting nuts	19 ÷ 24 (1,9 ÷ 2,4)
Cooling system temperature sensor	15 (1,5)
Oil pump body/support union bolts	8 ÷ 10 (0,8 ÷ 1)
Water pump retaining bolts	19 ÷ 24 (1,9 ÷ 2,4)
Intake manifold nuts	19 ÷ 24 (1,9 ÷ 2,4)
RH head temperature switch	33 ÷ 41 (3,4 ÷ 4,2)
Spark plugs	25 ÷ 34 (2,5 ÷ 3,5)
Gearbox-differential/engine union bolts	39 ÷ 48 (4 ÷ 4,9)
Front cross-member/strut union bolts	53 ÷ 85 (5,4 ÷ 8,7)
Clutch circuit hose to pipe union	15 ÷ 19 (1,5 ÷ 1,9)

SPECIAL TOOLS

1.820.012.000 (A.2.0195)	Cylinder head support clamp	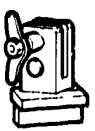 PA138A101
1.820.016.000 (A.2.0226)	Cylinder head support fork	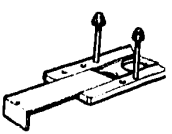 PA138A102
1.821.205.000	Valve assembly tool	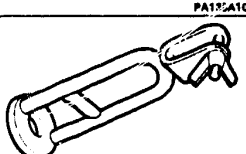 PA138A104
1.821.176.000 (A.3.0641)	Valve guide extractor	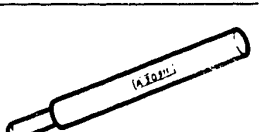 PA138A103

1.821.207.000	Intake valve-guide insertion tool	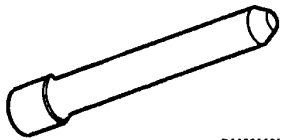 PA136A101
1.821.204.000	Camshaft seal insertion tool	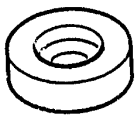 PA136A102
1.821.001.000 (A.3.0103)	Valve assembly bracket	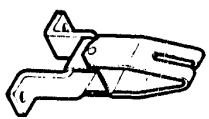 PA136A104
1.821.058.000 (A.3.0324)	Valve assembly lever	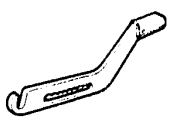 PA136A103

⇩

1.821.063.000 (A.3.0337)	Rear crankshaft oil seal insertion tool	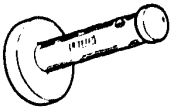 PA137A101
1.821.064.000 (A.3.0338)	Front crankshaft oil seal insertion tool	 PA137A102
1.820.208.000	Engine-transmission unit removal tool	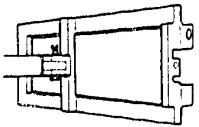 PA137A104
1.820.209.000	Anti-torque flange for electromagnetic coupling	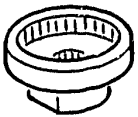 PA137A103



1.821.110.000 (A.3.0469)	Intake valve oil seal insertion tool	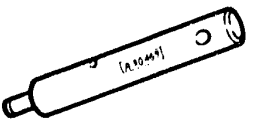 PA138A101
1.822.102.000	Spark plug wrench	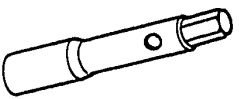 PB140A102
1.822.103.000	Ratchet wrench for spark plugs	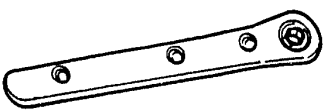 PA138A103
1.820.206.000	Camshaft sprocket locking tool	 PA138A104

⇩

1.820.207.000	Valve removal plate	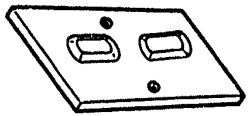 PA139A101
1.822.101.000	Cylinder head bolt key	 PA139A102
1.821.208.000	Valve-guide oil seal extractor	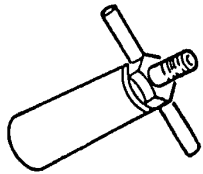 PA139A103

MICROFICHE INDEX

Microfiche 6/15

Group 01 - Turbodiesel engine

DESCRIPTION, LUBRICATING CIRCUIT, ENGINE UNIT REMOVAL AND INSTALLATION....01 - A
ENGINE UNIT REMOVAL AND INSTALLATION (Continued), ENGINE DISASSEMBLY AND ASSEMBLY FROM THE GEARBOX/DIFFERENTIAL UNIT....01 - B
ENGINE, ENGINE DISASSEMBLY....01 - C
ENGINE DISASSEMBLY (Continued), CYLINDER HEADS....01 - D
CHECKS AND INSPECTIONS....01 - E
CHECKS AND INSPECTIONS (Continued)....01 - F
CHECKS AND INSPECTIONS (Continued)....01 - G
ENGINE UNIT RE-ASSEMBLY....01 - H
ENGINE UNIT REASSEMBLY (Continued)....01 - I
ENGINE UNIT REASSEMBLY (Continued)....01 - L
TSN....01 - M
TSN (continued), SPECIAL TOOLS....01 - N

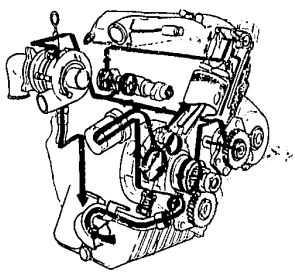

PA146F201

TURBODIESEL ENGINE

LUBRICATING CIRCUIT DESCRIPTION

ENGINE UNIT REMOVAL AND INSTALLATION

DESCRIPTION ..... 01 - 1
LUBRICATING CIRCUIT ..... 01 - 3
ENGINE UNIT REMOVAL AND INSTALLATION ..... 01 - 4

DESCRIPTION

The VM96A three in-line cylinder engine, installed on the 33 TD Intercooler and Sport Wagon TD Intercooler models, operates according to the Diesel cycle with indirect injection, precombustion chamber ① and supercharged by means of an exhaust gas-drive n ② turbocharger.

The main construction features of the engine, the special structure of which allows high performances and remarkably smooth running as well as reduced overall dimensions to be obtained, are the following :

- cast-iron ③ cylinder block with closed lower structure and tunnel-housing of the crankshaft mounted on four journals, three of which are ④ in aluminium;
- two counter-rotating weights ⑤ to balance the first order inertial forces, directly driven by the crankshaft by means of a pair of spur gears and supported by a shaft, fixed to the left-hand side of the ⑥ ⑦ cylinder block:

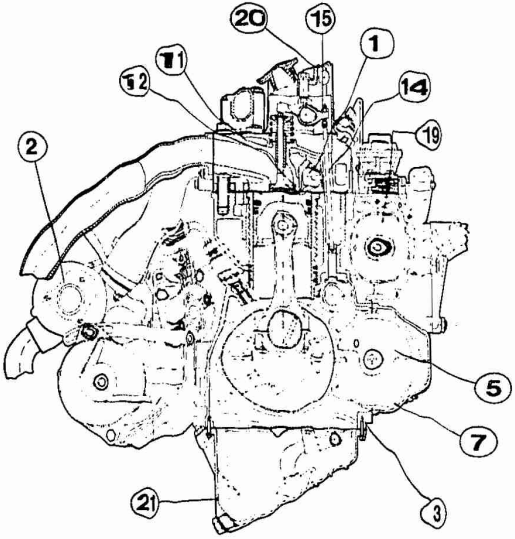

PA001F201

DESCRIPTION (continued)

- cylinders ⑧ integral with the cylinder block, with liners of the wettype which can be withdrawn and interchanged, and pistons ⑨ with the first segment seat of "insert" type. ⑩;
- cylinder heads ⑪ separated for each cylinder, in light alloy with valve seat of "insert" type. ⑫;
- Pressed steel crankshaft ⑬ completely balanced and with hard-facing treatment:
- timing system of rocker arm ⑭ and push rod type ⑮ with camshaft ⑯placed sideways in alloy steel;
- gears with slack automatic take-up for oil pump ⑰, vacuum pump control ⑱, injection pump control ⑲;
- timing system cover ⑳ manufactured in deadening material in order to reduce the noise level.
- special oil sump, designed to allow ㉑ the engine unit to installed with a 30° slant as to the vertical line.

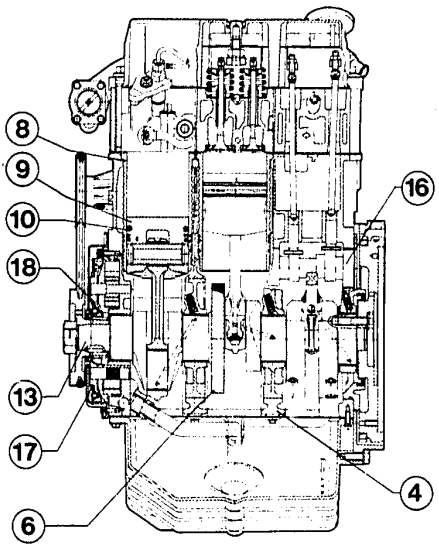

PA002F201

LUBRICATING CIRCUIT

The lubrication is of forced-type with rotor pump and ⑬ total oil filtering. The sump oil is sucked ⑱ by the pump, through a ⑬ suction rose provided with ⑰ a wire gauze, and then, through the check valve, ⑱ the oil is sent to the oil-water exchanger ⑭, the filter ⑫; finally the oil flow, through the main duct returns to the turbosupercharger ③ to the camshaft ⑤ and to the rocker arms ④, to the counterweight shaft ⑨, to the vacuum pump ⑩, to the front main journal ⑪ and the central ones ⑫ anf finally to the main and big end bearings.

Each main bearing is provided with a spray nozzle which supplies an oil ⑦ flow for lubricating the piston pin and cooling the piston crown.

The pressure relief valve allows the oil to circulate even when the filter ⑫ is clogged. The minimum oil pressure sensor causes the lighting up of the warnig light in case of insufficient oil pressure.

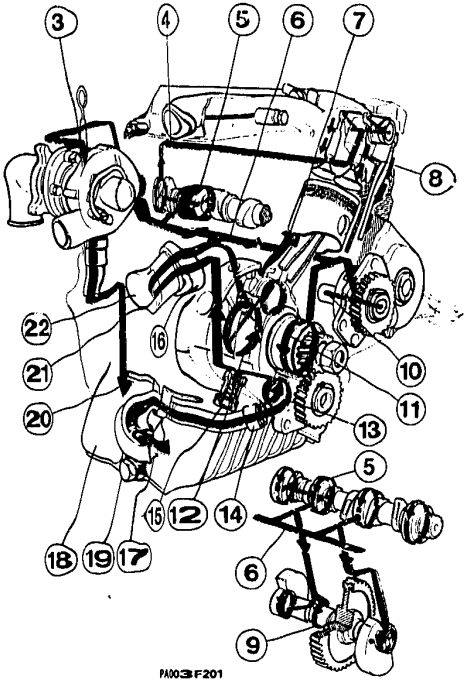

PA003F201

ENGINE UNIT REMOVAL AND INSTALLATION

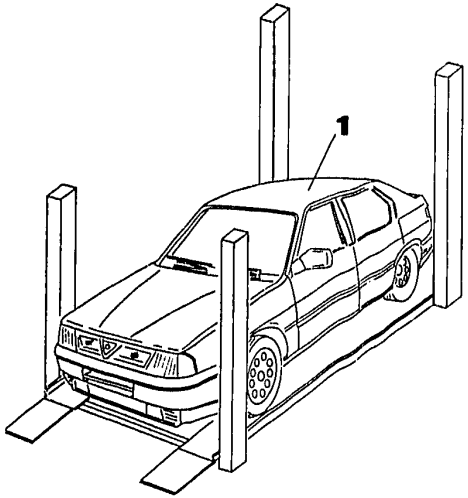

1. Place the vehicle on a lift platform, engage the first speed and actuate the parking brake.
   Remove the engine hood (see **GR. 56**).

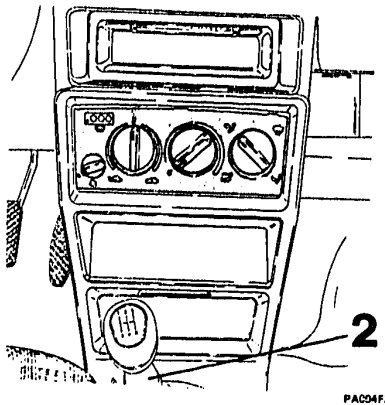

- Disconnect the battery negative cable.
2. By operating inside the passenger compartment, withdraw the gear-shift lever cover and the relevant dust boot.

ENGINE UNIT REMOVAL AND INSTALLATION (continued)

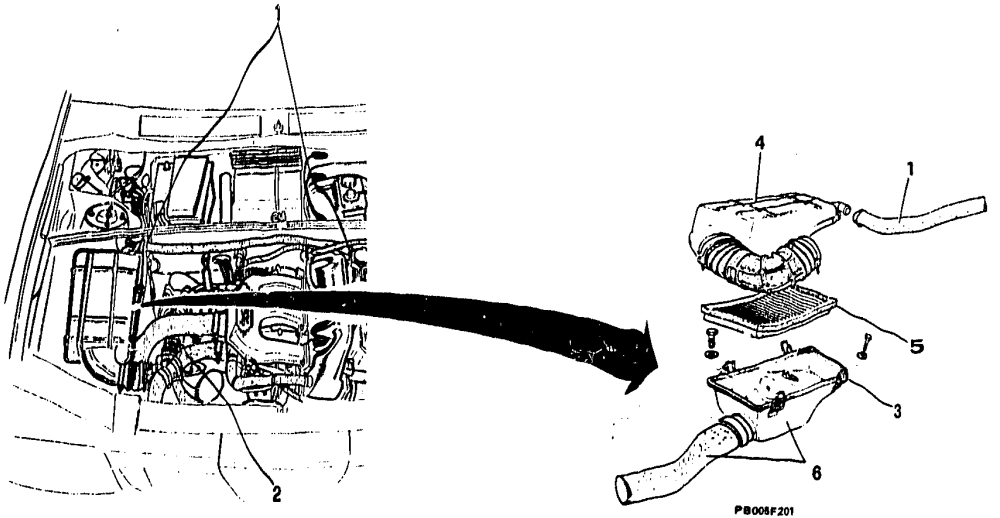

1. Disconnect the oil vapour breather pipe from the air cleaner and from the tappet cover and remove it.
2. Disconnect the turbocharger air delivery sleeve.
3. Release the four clips.
4. Remove the cover complete with sleeve.
5. Remove the air filter.
6. Unscrew the two securing screws and remove the air filter box along with the air intake sleeve.

ENGINE UNIT REMOVAL AND INSTALLATION (continued)

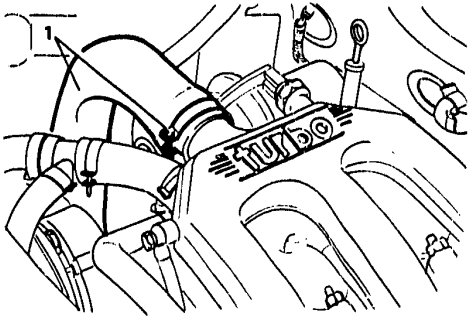

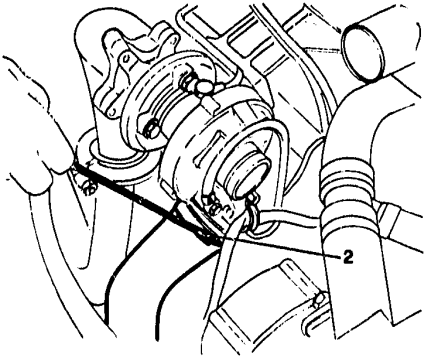

PA006F201

1. Unloose the two fixing clamps and remove the intercooler-to-air intake box air delivery hose.

2. Unloose the two fixing clamps and remove the turbosupercharger-to-intercooler air delivery hose.



ENGINE UNIT REMOVAL AND INSTALLATION (continued)

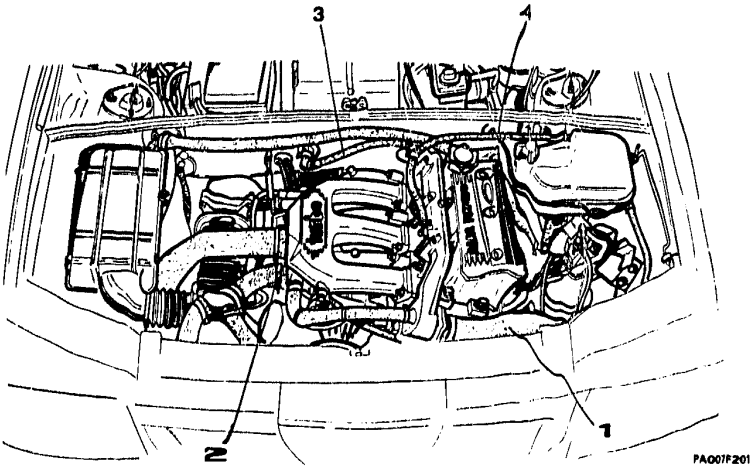

1. Disconnect the coolant delivery sleeve from the radiator.
- Place a suitable container under the vehicle in order to collect all the coolant.
- Disconnect and remove the sleeve (1) from the thermostat.
2. Remove the coolant return sleeve from the pump.
3. Remove the coolant delivery hose to the heater, by disconnetting it from the cylinder head manifold.
4. Remove the cooling circuit bleeding hose by disconnecting it from the cylinder head manifold.



ENGINE UNIT REMOVAL AND INSTALLATION (continued)

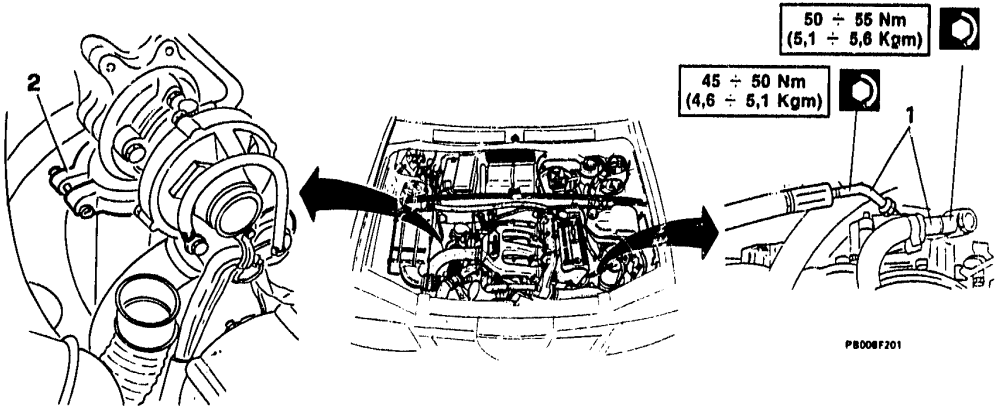

1. Remove the power steering pump delivery and return unions, by suitably positioning them in order to prevent any oil leakage fron the system.

2. Unscrew the fixing bolt and remove the clamp to release the union of the exhaust pipe front part.

ENGINE UNIT REMOVAL AND INSTALLATION (continued)

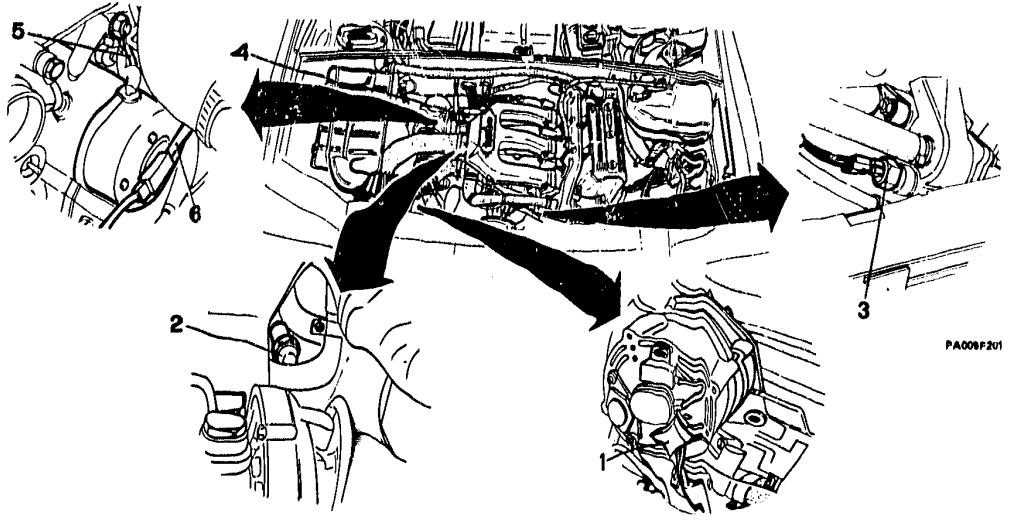

1. Disconnect the alternator and warning light supply cable.
2. Disconnect the oil minimum pressure sensor cable.
3. Disconnect the thermal contact cables from the thermostat.
4. Disconnect the over-boost air pressure warning light sensor cables.
5. Disconnect the cable from the terminal on the cranking motor.
6. Disconnect the cable from the free connector.
- Release the above-mentioned wiring from all clamps and withdraw it from the engine rear side.

ENGINE UNIT REMOVAL AND INSTALLATION (continued)

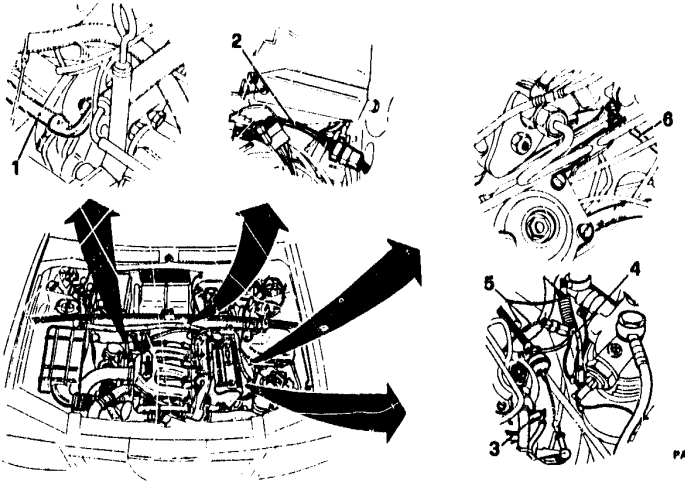

1. Disconnect the earth cable.
2. Disconnect the cable from the odometer sensor connector and withdraw the wiring from the cable runner on the sevice compartment panel.
3. Disconnect the cable from the loading microswitch on the injection pump.
4. Disconnect the electronic rev counter impulse sender cable from its connector.
5. Disconnect the engine shut-down control solenoid cable from its mobile connector.
6. Disconnect the preheating glow-plug supply cable from the attachment on the plug of the third cylinder.

- Withdraw the electrical cables from any clamps and separate them from the engine so that they do not interfere with the removal operations.

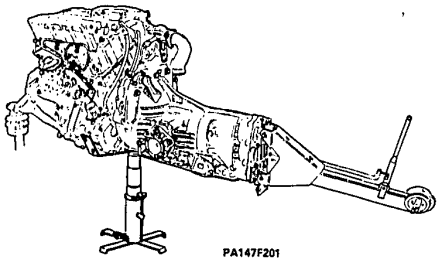

PA147F201

TURBODIESEL ENGINE

ENGINE UNIT REMOVAL AND INSTALLATION (cont.)

ENGINE DISASSEMBLY AND ASSEMBLY FROM THE GEARBOX/DIFFERENTIAL UNIT

ENGINE UNIT REMOVAL AND INSTALLATION..... 01 - 11
ENGINE DISASSEMBLY AND ASSEMBLY FROM THE GEARBOX/DIFFERENTIAL UNIT..... 01 - 20

ENGINE UNIT REMOVAL AND INSTALLATION (continued)

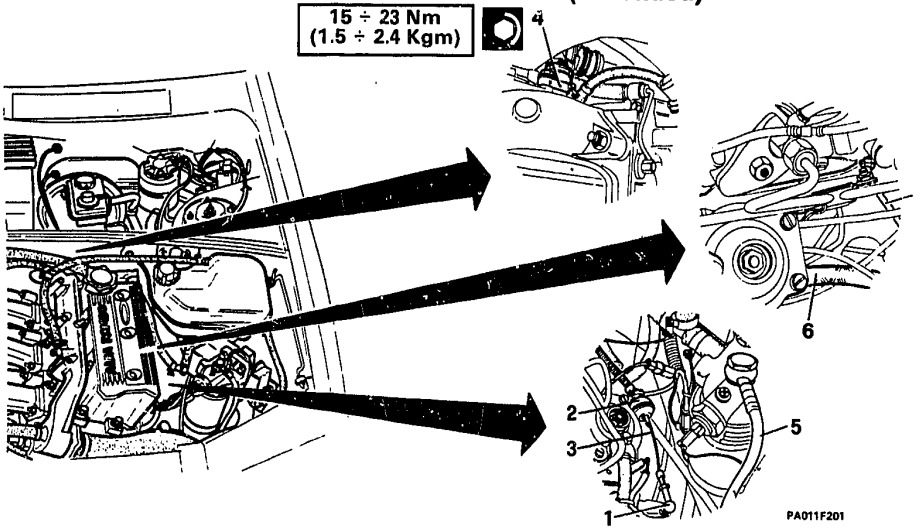

1. Disconnect and remove the clip securing the accelerator ball joint and disconnect it from the lever on the injection pump.
2. Remove the rubber boot from the bracket.
3. Withdraw the accelerator cable complete with ball joint.
4. Unloose the two fixing screws in order to detach the clutch control cylinder from the engine, without disconnecting the pipe.
5. Disconnect and remove the hose from the fuel filter and from the injection pump.
6. Disconnect the hose from the injection pump.

ENGINE UNIT REMOVAL AND INSTALLATION (continued)

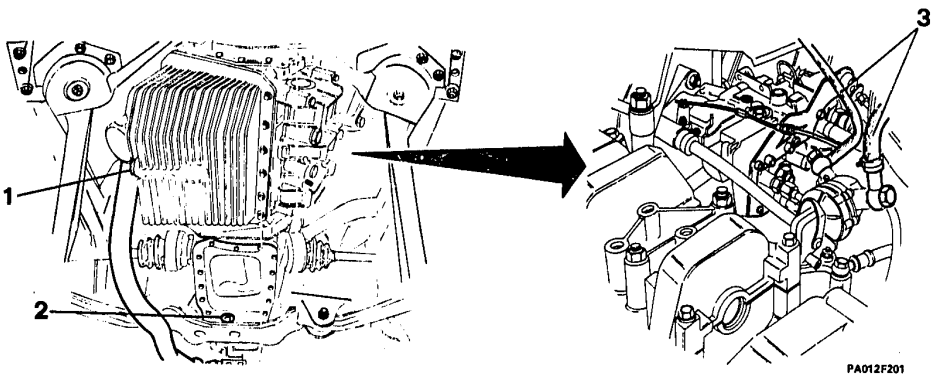

- Place the vehicle on a lift platform anf lift it.

1. Unscrew the plug and drain the engine oil; refit the plug at the end of the operation.
2. Unscrew the plug and drain the gearbox-differential oil, refit the plug at the end of the operation.
3. Unscrew and disconnect the two hose unions from the fuel supply pump.

Keep pipings upwards in order to avoid fuel leakage. Make sure that the workshop is provided with all the safety equipment and suitably follows all safety measures.

ENGINE UNIT REMOVAL AND INSTALLATION (continued)

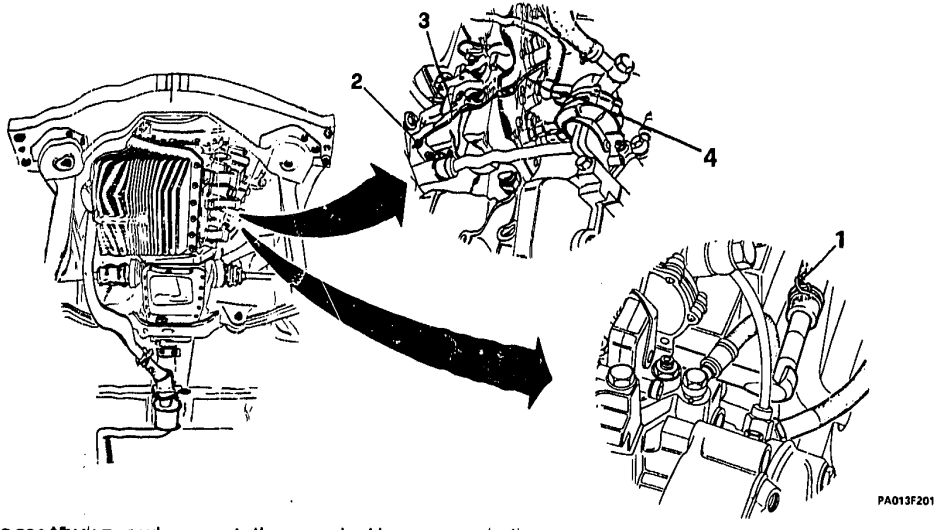

1. Unloose the clamp and separate the power braking vacuum intake hose from the pipe.
2. Unscrew the screw clamp fixing the advance cable.
3. Disconnect the advance cable from the injection pump lever.
4. Unscrew the nut fixing the sheath to the bracket.
- Withdraw the sheath complete with the cable.

ENGINE UNIT REMOVAL AND INSTALLATION (continued)

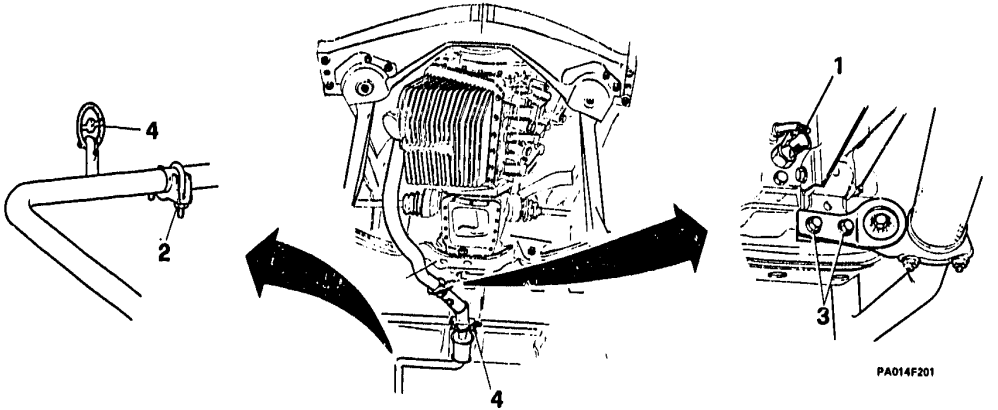

1. Disconnect the reverse light cable.
2. Slacken the clamp securing the exhaust pipe central part to the rear one.
3. Unscrew the bracket fixing screws.
4. Remove the central and front sides of the exhaust pipe at the same time, by releasing them from the spring mounts.

ENGINE UNIT REMOVAL AND INSTALLATION (continued)

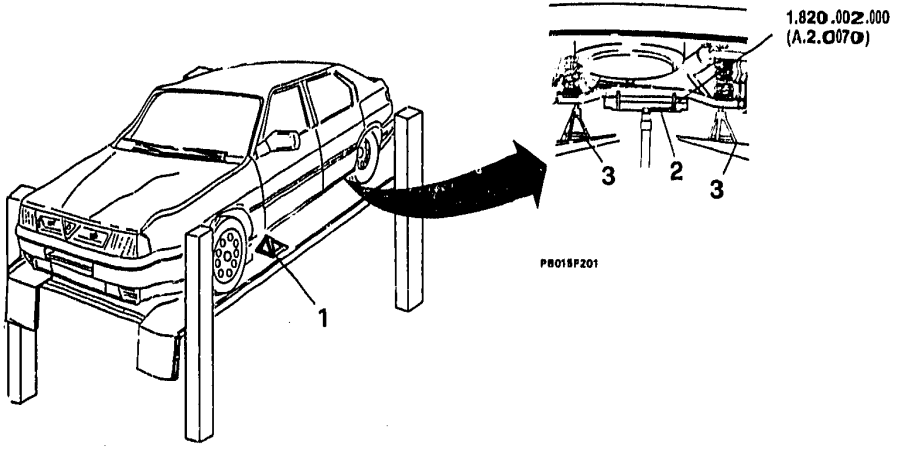

- Place a column-type jack under the central area of the engine front crossmember.

1. Lift the vehicle on the front side and lean it on two safety stands.

Place a suitable wood or rubber block between the lift and the crossmember not to damage the crossmember.

2. Lift the vehicle on the rear side by placing a column-type jack provided with supporting tool N° 1.820.002.000 (A.2.0070)under the axle shaft.
3. Lean the vehicle on other two safety stands.

ENGINE UNIT REMOVAL AND INSTALLATION (continued)

1. Unscrew the nut securing the counterweight shaft casing.
2. Place tool N° 1.820.147.000 (R.4.0193) under the oil sump.
- Partially secure the above-mentioned tool by means of nut (1).
3. By means of the screw indicated in the figure, complete tool fixing operations.
- Place a column-type jack under the pin of tool N° 1.820.147.000 (R.4.0193).
- Operate the jack until the engine is slightly pushed upwards, then secure the tool fulcrum by means of a pin.

Tool N° 1.820.147.000 (R.4.0193), to be used for the engine unit removal must be permanently secured to the engine till the end of the operation.

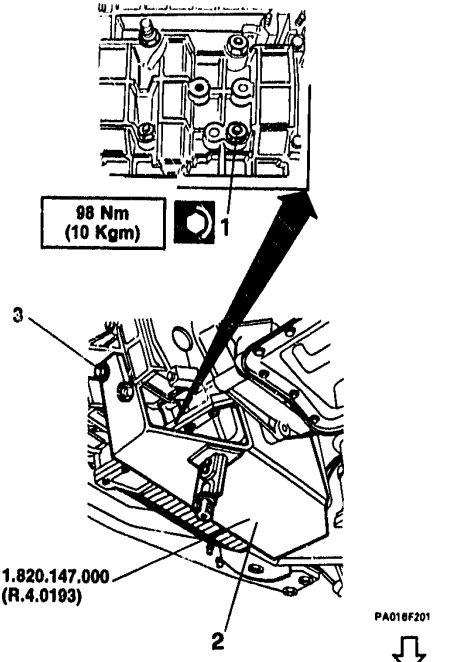

PA016F201

ENGINE UNIT REMOVAL AND INSTALLATION (continued)

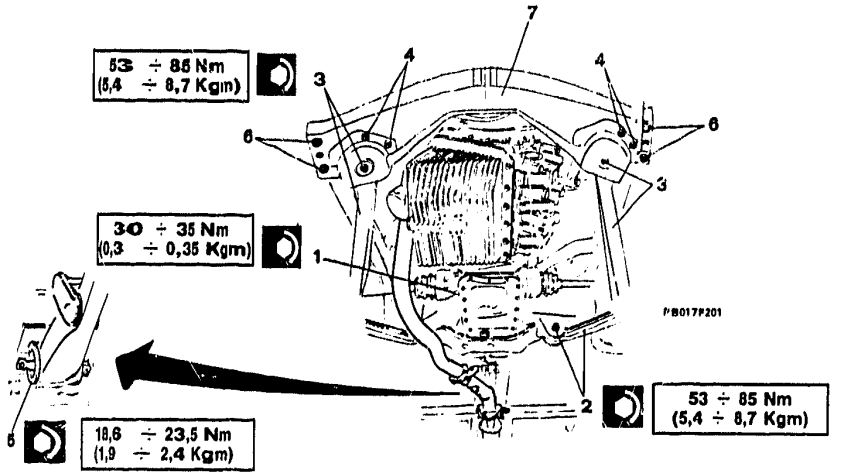

1. Unscrew the drive shafts to differential shafts fixing screws and release the drive shafts.
2. Unscrew and remove the fixing bolts of the transverse links.
3. Unscrew and remove the strut fixing bolts and release the two arms of the front suspensions.
4. Unscrew the fixing nuts of the engine mounts to the front cross member.
5. Remove the fixing screws of the gearbox rear mount.
6. Remove the fixing screws of the front cross member to the body work.
7. Remove the engine front cross member.

ENGINE UNIT REMOVAL AND INSTALLATION (continued)

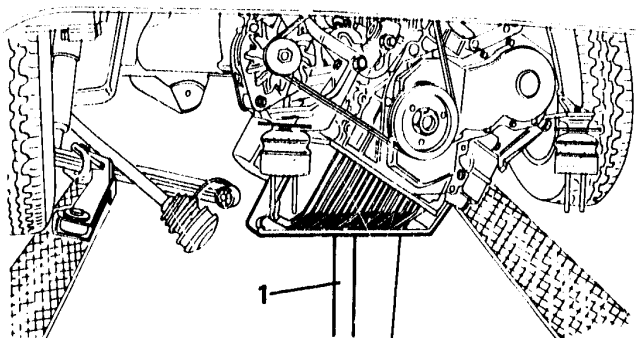

1. Gradually release the column-type jack and lower the complete engine unit.

Verify that the gearshift lever and the gearbox mount are released from the car body.

ENGINE UNIT REMOVAL AND INSTALLATION (continued)

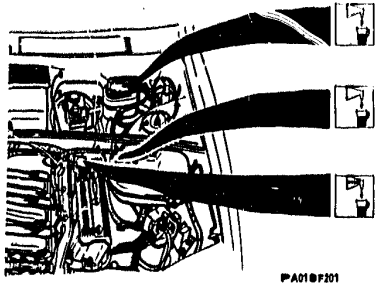

PA019F201

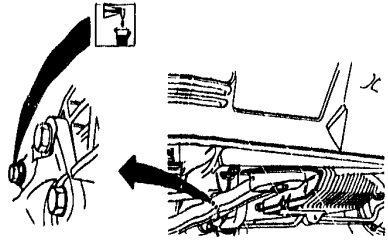

PA019F202

- For the installation, reverse the order of removing operations and observe the following prescriptions:

While inserting the engine unit into its compartment, pay attention that the gearbox mount cross member and the gearshift lever are correctly positioned into their seats.

- Refill the engine unit with the prescribed oils and fluids (see GR. 00).
- Make sure that the advance control lever fully travels till positioning the injection pump lever against the limit stop. Otherwise unloose the advance cable screw clamp and carry out adjusting operations.
- Adjust the accelerator cable (see GR. 04).
- At the end of the installation procedures and after attaining the operating temperature, check the engine regular running at idle speed. For any tune-up operation of the engine (see GR. 00).

ENGINE DISASSEMBLY AND ASSEMBLY FROM THE GEARBOX/DIFFERENTIAL UNIT

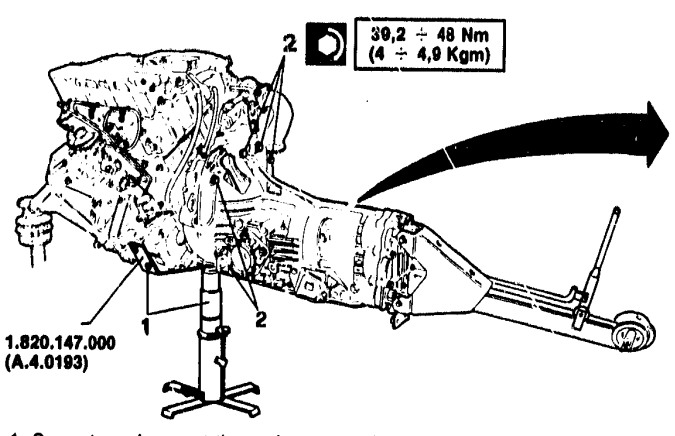

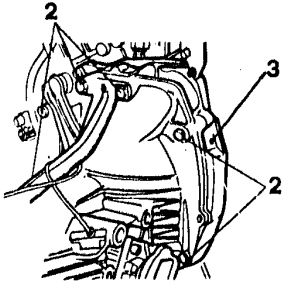

PR02DF201

1. Separate and support the engine group with a suitable column lift and tool N° 1.820.147.000 (R.4.0193).

- Place a suitable support under the gearbox/differential unit.

2. Detach the gearbox/differential box from theengine rear flange.

- Separate the two units by withdrawing them from the dowels.

3. Block the flywheel rotation by inserting tool No. 1.820.078.000 (A.2.0448) into the special hole.

- Mark the clutch unit position as to the flywheel, then remove the clutch housing together with the disc.

To avoid any damage, withdraw the thrust bearing from gearbox.

ENGINE DISASSEMBLY AND ASSEMBLY FROM THE GEARBOX/DIFFERENTIAL UNIT (continued)

When reassembling, make sure the flywheel, the clutch and the clutch pressure plate working surfaces are perfectly clean and dry.

1. Place the clutch disc and the housing onto the engine flywheel.
- By means of tool No. 1.820.108.000 (A.4.0144) center the clutch disc and tighten the screws fixing the clutch housing to the engine flywheel.
2. Block the flywheel rotation and tighten the clutch housing to engine flywheel fixing screws to the specified torque in crossed order.
- Remove tool No. 1.820.078.000 (A.2.0448).
- Lubricate the driven end shaft working surface with the prescribed grease:

ISECO Molykote - Pasta G

- Complete the assembly of the two units by reversing disassembly procedures and tightening the union screws to the prescribed torque.

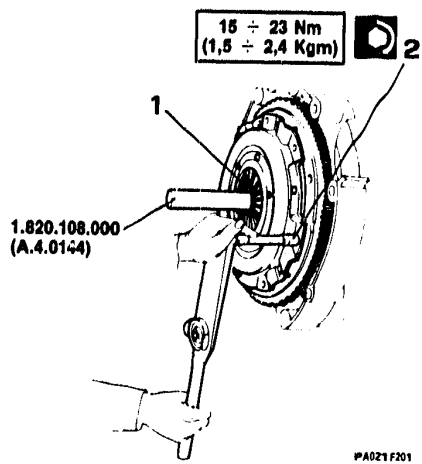

TURBODIESEL ENGINE

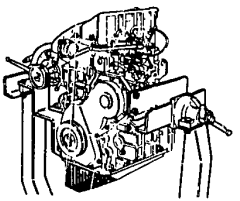

PA148F201

ENGINE
ENGINE DISASSEMBLY

ENGINE

ASSEMBLY ..... 01 - 22
External parts - Accessories ..... 01 - 22
External parts - cylinder block ..... 01 - 24
External parts - cylinder head ..... 01 - 26
Internal parts ..... 01 - 28

ENGINE DISASSEMBLY

PRELIMINARY OPERATIONS ..... 01 - 30
INTAKE AND EXHAUST MANIFOLD ..... 01 - 33
THERMOSTAT UNIT AND COOLING CIRCUIT MANIFOLD ..... 01 - 34
WATER/OIL HEAT EXCHANGER AND CRANKING MOTOR ..... 01 - 35

ENGINE

ASSEMBLY

External parts - Accessories

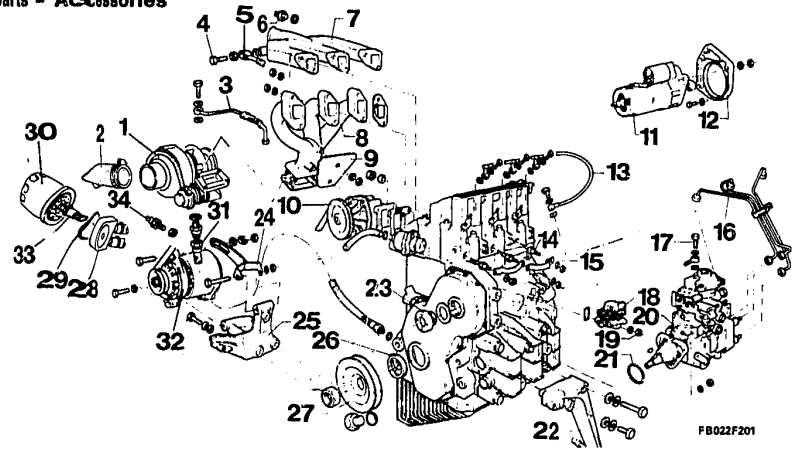

1. Turbosupercharger - 2. Sleeve - 3. Oil delivery pipe to turbosupercharger - 4. Union - 5. LDA pipe - 6. Supercharge pressure sensor - 7. Intake manifold - 8. Exhaust manifold - 9. Heat-proof plate - 10. Water pump - 11. Starting motor - 12. Starting motor attachment flange

13. Diesel return pipe from injectors - 14. Preheating glow-plugs - 15. Glow-plug conductor - 16. Diesel delivery pipe to injectors - 17. Union - 18. Fuel pump - 19. Nut - 20. Injection pump

ENGINE

ASSEMBLY

External parts - Accessories (Continued)

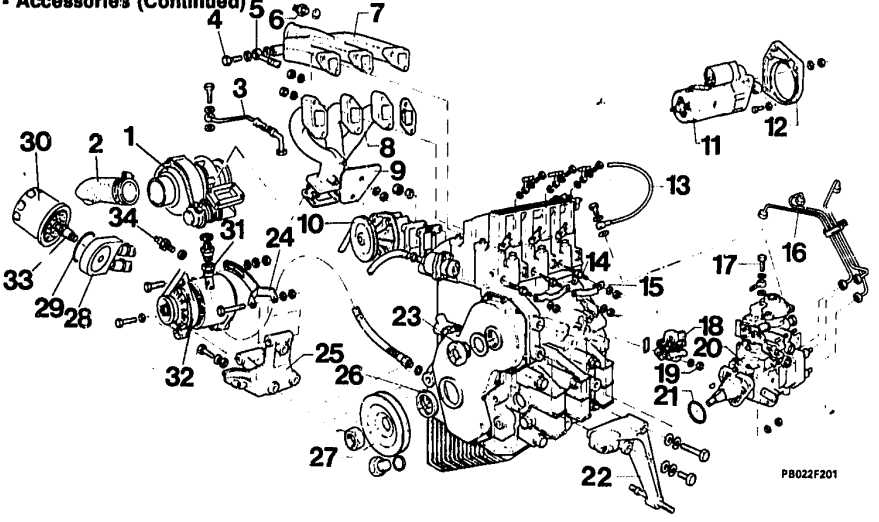

21. Seal ring - 22. Engine support (LH side) - 23. Access plug to nut securing injection pump gear - 24. Bracket - 25. Engine support (RH side) - 26. Seal ring - 27. Engine pulley

28. Water-oil exchanger - 29. Seal ring - 30. Oil filter - 31. Oil return pipe from turbosupercharger - 32. Alternator - 33. Oil filter union - 34. Oil pressure sensor.

ENGINE

ASSEMBLY (Continued)

External parts - Cylinder block

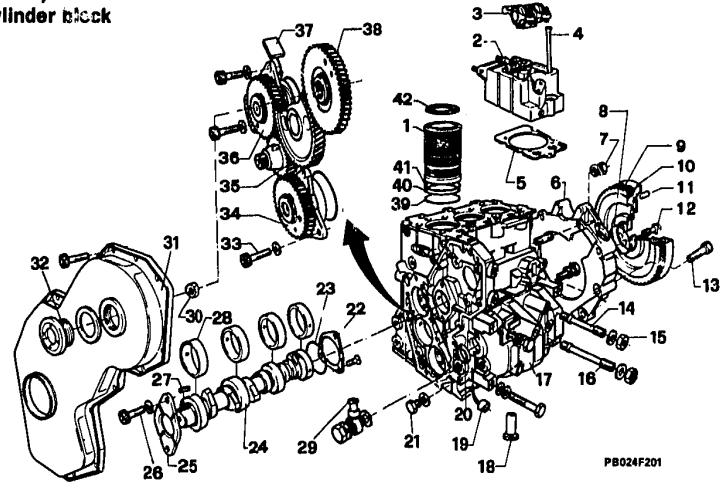

1. Cylinder liner - 2. Cylinder head - 3. Rocker arm unit - 4. Rod - 5. Cylinder head gasket - 6. Clutch flange - 7. Nut securing flange - 8. Seal ring - 9. Ring gear - 10. Flywheel - 11. Dowel - 12. Bolt securing flange

13. Bolt securing flange - 14. Stud bolt - 15. Nut - 16. Stud bolt - 17. Balancing shaft guard - 18. Tappet - 19. Bushing - 20. Plug - 21. Plug - 22. Gasket

ENGINE

ASSEMBLY

External parts - Cylinder block (Continued)

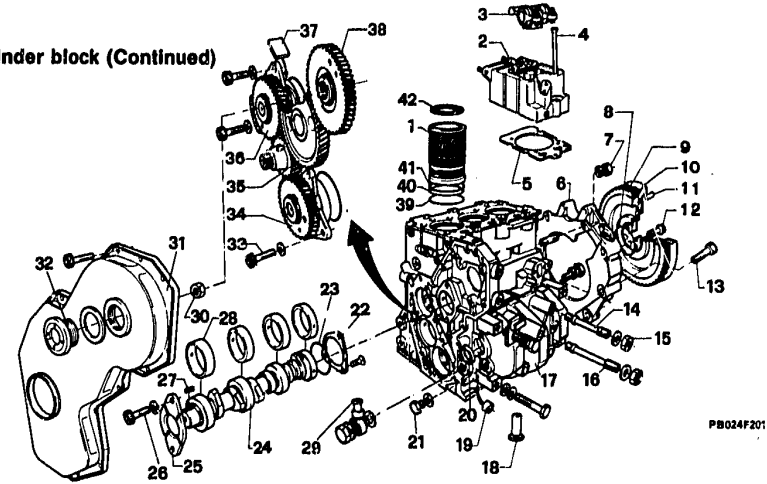

23. Seal ring - 24. Camshaft - 25. Camshaft flange - 26. Bolt securing flange - 27. Key - 28. Camshaft bushing - 29. Union - 30. Nut - 31. Guard - 32. Access plug to nut securing injection pump gear - 33. Bolt - 34. Oil pump gear - 35. Timing gear -

36. Vacuum pump gear - 37. Vacuum pump blade - 38. Injection pump gear - 39. Water seal ring - 40. Water seal ring - 41. Oil seal ring - 42. Water seal ring.

ENGINE

ASSEMBLY (Continued)

External parts - Cylinder head

1. Tappet adjustment locknut
2. Rocker arm
3. Rocker arm bushing
4. Nut securing rocker arm mounting
5. Rocker arm mounting
6. Flexible shoulder device
7. Cotters
8. Upper cap
9. Spring
10. Lower cap
11. Valve guide
12. Cylinder head
13. Stud bolt (intake)
14. Stud bolt (exhaust)
15. Intake valve seat
16. Exhaust valve seat
17. Intake valve
18. Exhaust valve
19. Bolt securing cylinder head
20. Bolt securing cover

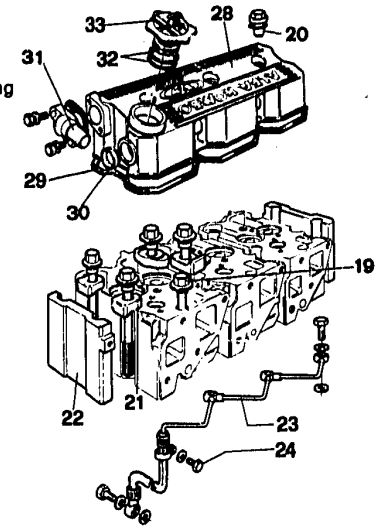

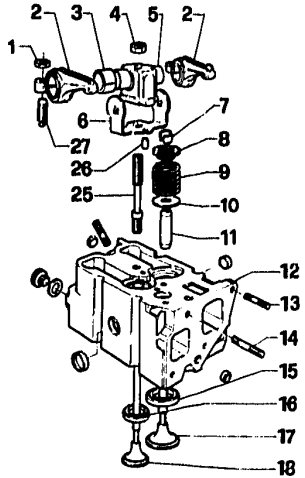

ENGINE

ASSEMBLY

External parts - Cylinder head (Continued)

21. Spacer retainer block
22. Spacer
23. Rocker arm lubrication piping
24. Screw securing piping
25. Stud bolt securing mounting
26. Dowel
27. Tappet adjustment
28. Tappet cover
29. Cover gasket
30. Plug
31. Breather pipe
32. O-Ring
33. Oil refill cap

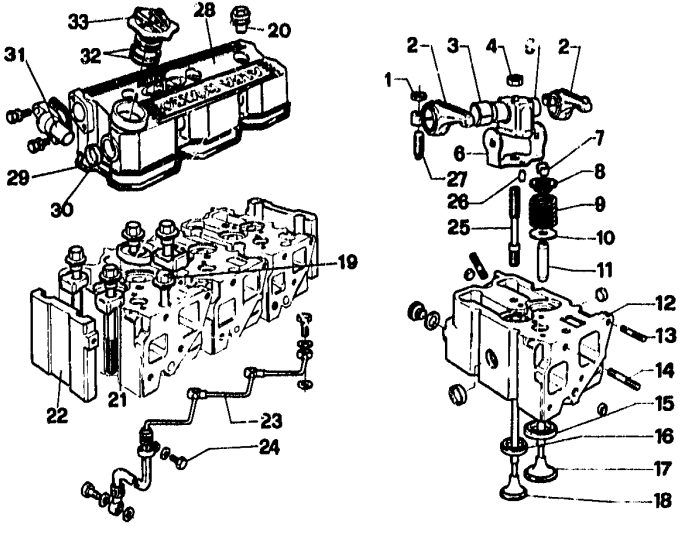

PBG28F201

ENGINE

ASSEMBLY (Continued)

Internal parts

1. Nozzle
2. Crankshaft support
3. Reference dowel
4. Screw
5. Oil pump gear
6. Main half bearings
7. Key
8. Crankshaft
9. Balancing shaft gear
10. Bushing
11. Shim half rings
12. O-Ring
13. Stud bolt
14. Support
15. Washer
16. Spring washer
17. Nut
18. Valve
19. Upper seal ring
20. Lower seal ring
21. Oil scraper ring
22. Piston
23. Snap ring
24. Gudgeon pin
25. Conn. rod

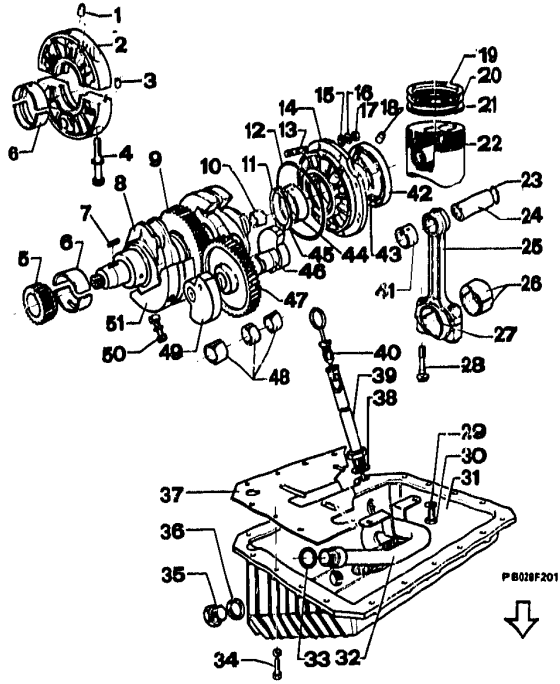

ENGINE

ASSEMBLY

Internal parts (Continued)

26. Crankpin half bearings
27. Conn. rod cap
28. Conn. rod cap screw
29. Spring washer
30. Screw
31. Oil sump
32. Oil suction pipe
33. O-Ring
34. Bolt securing sump
35. Oil drain-off plug
36. Gasket
37. Splash shield
38. Gasket
39. Oil dipstick pipe
40. Oil dipstick
41. Big end bushing
42. Seal ring
43. Shim half ring
44. Bushing
45. Shim half ring
46. Balancing shaft
47. Balancing shaft gear
48. Balancing shaft bushings
49. Counter-rotating weight
50. Bolt securing counterweight
51. Crankshaft counterweight

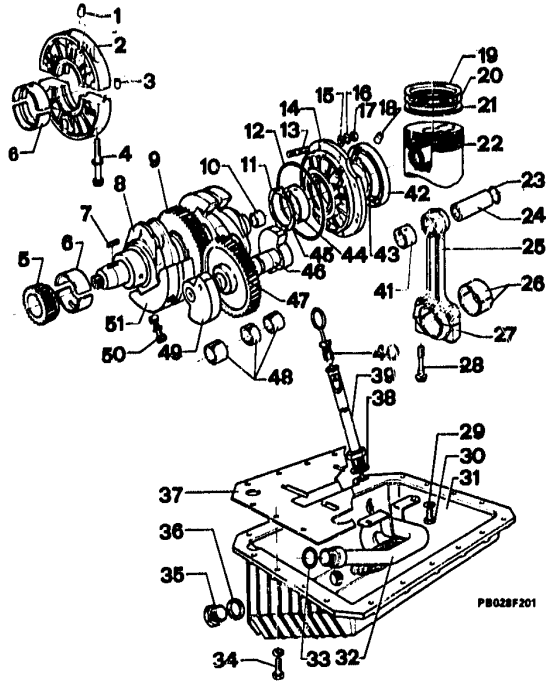

ENGINE DISASSEMBLY

PRELIMINARY OPERATIONS

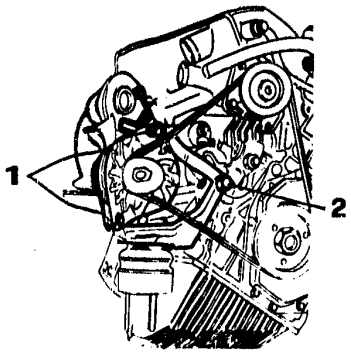

PB030F201

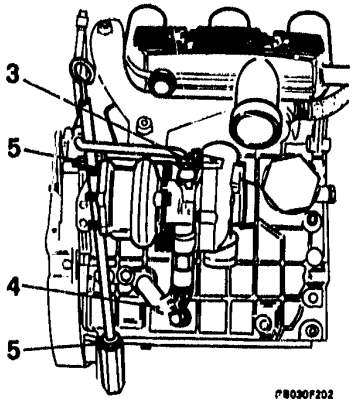

PB030F202

- Sling engine.
- Remove tool N° 1.820.147.000 (H.4.0103), used for removal

1. Unscrew the two screws and remove the alternator.
2. Unscrew the screws and remove the engine support.
3. Unscrew union of oil delivery to turbosupercharger.
4. Unscrew from the turbosupercharger the oil return pipe to engine block.
5. Unscrew the two nuts and remove the oil dipstick.



ENGINE DISASSEMBLY

PRELIMINARY OPERATIONS (continued)

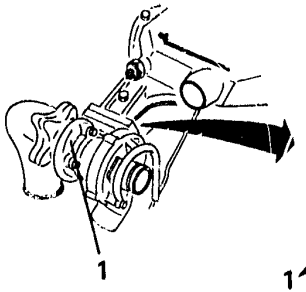

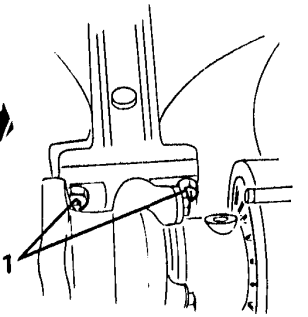

PB031F201

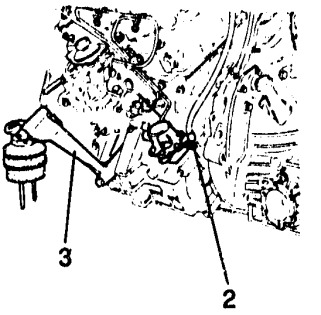

PB031F202

1. Unscrew the four self-locking nuts fixing the turbosupercharger to the exhaust manifold and remove it.
2. Unscrew the fixing nuts and remove the fuel pump.
3. Remove the engine support.

ENGINE DISASSEMBLY

PRELIMINARY OPERATIONS (continued)

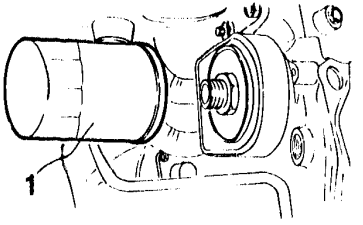

PA028F201

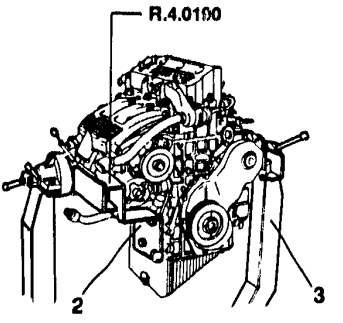

PA028F202

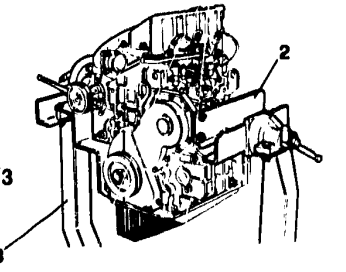

PA028F203

1. Using a suitable wrench, remove the oil filter.
2. Apply the supporting brackets No. (R.4.0190).
3. Secure the engine unit on the relevant overhaul work bench.

ENGINE DISASSEMBLY (continued)

INTAKE AND EXHAUST MANIFOLD

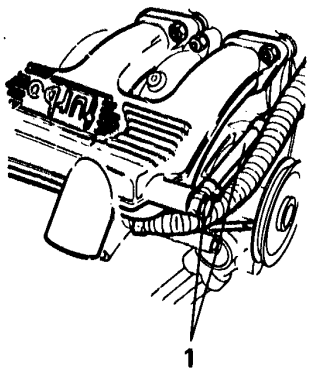

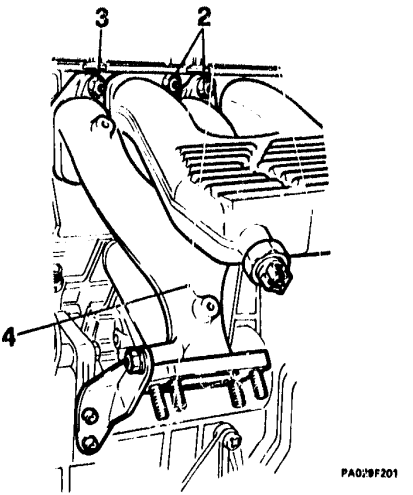

1. Detach the piping by unscrewing the union.
2. Unscrew the six nuts and remove the intake manifold.
3. Unscrew the six self-locking nuts.
4. Unscrew the two screwa and remove the exhaust manifold.

ENGINE DISASSEMBLY (continued)
THERMOSTAT UNIT AND COOLING CIRCUIT MANIFOLD

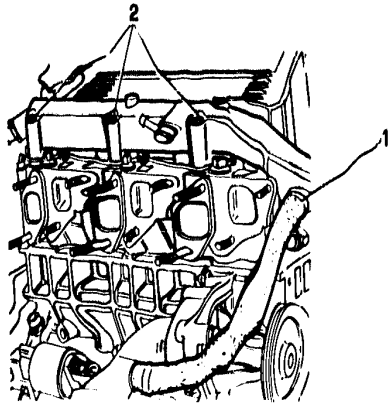

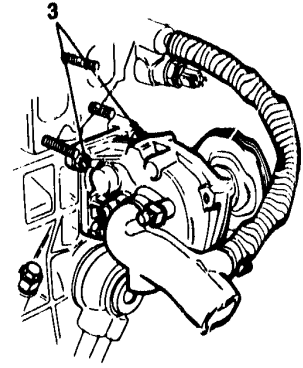

PA-00120-01

1. Loosen the clamp and disconnect the coolant delivery hose.
2. Unscrew the six screws and remove the manifold.
3. Unscrew the four nuts and remove the water pump.

ENGINE DISASSEMBLY (continued)

WATER-OIL HEAT EXCHANGER AND CRANKING MOTOR

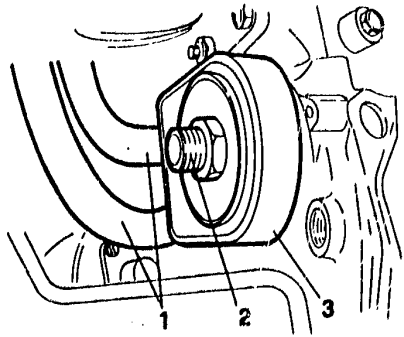

PA031F201

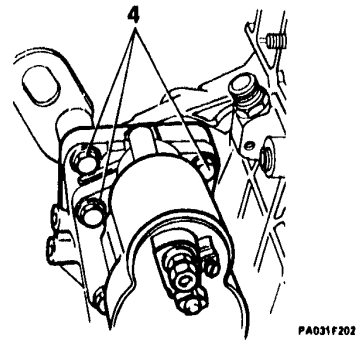

PA031F202

1. Detach the sleeves from the water pump and the cylinder block union respectively.
2. Slacken adn remove the oil filter union.
3. Remove the water-oil heat exchanger.
4. Unscrew the fixing screws and remove the cranking motor.

TURBODIESEL ENGINE

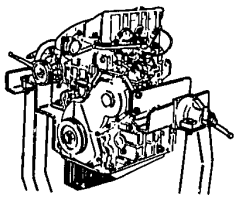

ENGINE DISASSEMBLY (Continued) CYLINDER HEADS

ENGINE DISASSEMBLY

INJECTION PUMP ..... 01 - 36
TAPPET COVER ..... 01 - 38
CYLINDER HEADS ..... 01 - 39
FRONT PULLEY ..... 01 - 41
FRONT COVER, OIL PUMP AND VACUUM PUMP ..... 01 - 42
TIMING SYSTEM CONTROL AND OIL SUMP ..... 01 - 43
COUNTERWEIGHT SHAFT ..... 01 - 45
PISTON-CONNECTING ROD ASSY ..... 01 - 46
CYLINDER LINERS ..... 01 - 47
FLYWHEEL AND REAR JOURNAL ..... 01 - 48
CRANKSHAFT ..... 01 - 49

CYLINDER HEADS

DISASSEMBLY AND ASSEMBLY ..... 01 - 50

ENGINE DISASSEMBLY (continued)

INJECTION PUMP

1. Unscrew the delivery hose connections from the injection pump and the injectors.
2. Detach the injector draining pipe by unscrewing the union placed on the injection pump.
3. Unscrew the three nuts fixing the injectors.
4. Remove the brackets.
5. Remove the spacers.
6. Remove the injectors along with the draining pipe.
7. Slacken the clamp and withdraw the pipe from the union.
8. Block the flywheel rotation by inserting tool No. 1.820.078.000 (A.2.0448) into the special hole machined on the engien-gearbox coupling flange.

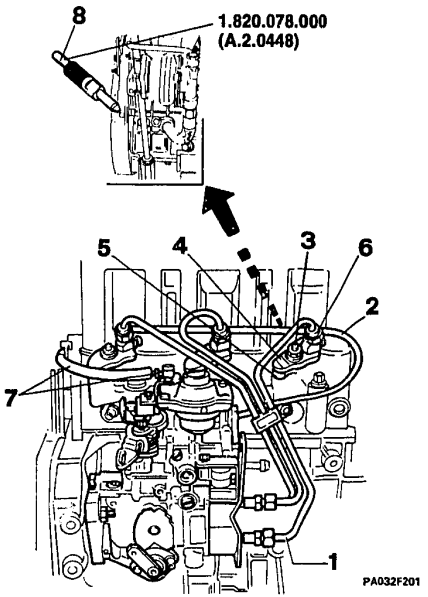

ENGINE DISASSEMBLY

INJECTION PUMP (continued)

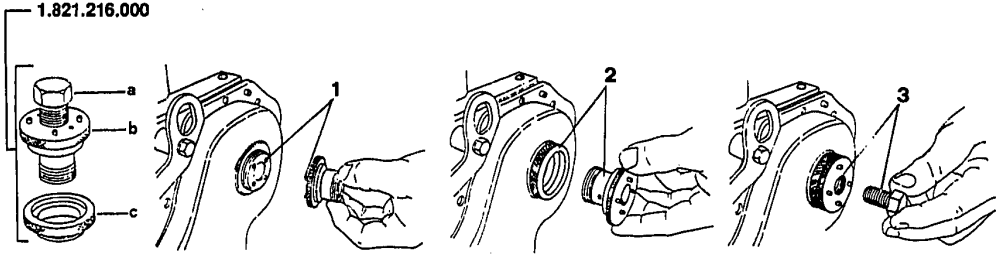

PA033F201

- Match the component (b) of tool No. 1.821.216.000 to the four holes on the plug.

1. Unscrew the plug to gain access to the blocking nut between the drive gear and the pump.
   Remove the above-mentioned nut.
2. Completely tighten the ring nut (c) of tool No. 1.821.216.000to the casing and the component (b) of the same tool to the gear.
3. Put in contact the extraction screw (a) of tool No. 1.821.216.000 with the pump shaft end.

- Unscrew the pump fixing screws and proceed to the removal of the pump.

ENGINE DISASSEMBLY (continued)

TAPPET COVER

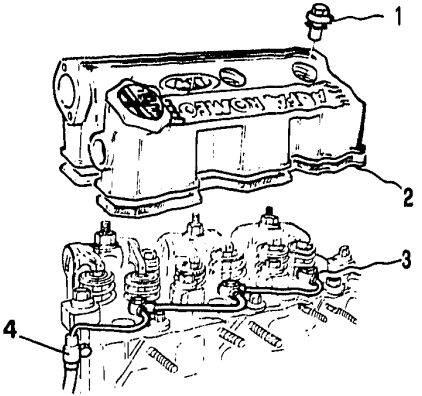

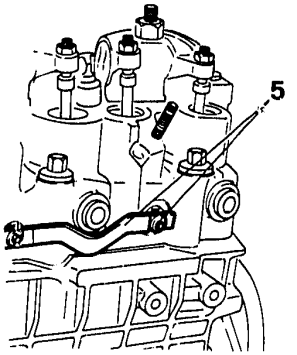

PA034F201

1. Unscrew the nuts fixing the cover to the cylinder heads and remove the cover.
2. Remove the gasket.
3. Detach the unions of the rocker lubrication piping from the cylinder heads and cylinder block.
4. Remove the bracket and the complete piping.
5. Unscrew the nuts and remove the conductors from the pre-heating glow plugs.

ENGINE DISASSEMBLY (continued)
CYLINDER HEADS

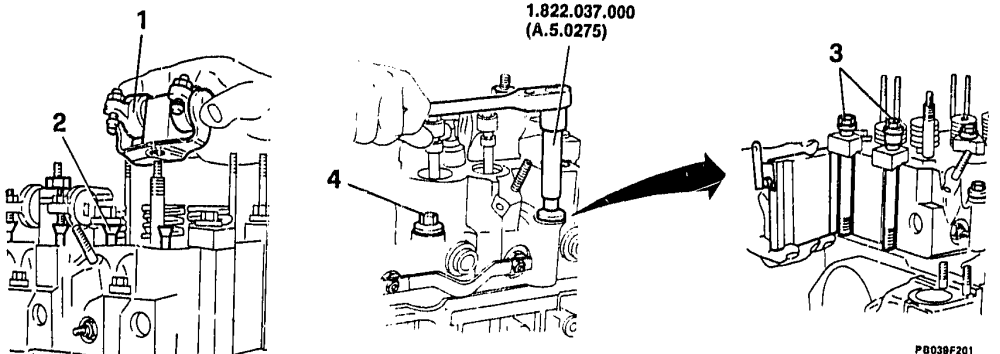

– Mark the cylinder head and rocker holding bracket assembly order.

1. Unscrew the fixing nuts and remove the rocker holding brackets.
2. Withdraw the pushrods of the tappets.
3. By means of wrench No. 1.822.037.000 (A.5.0275) remove the screws and keep the spacers apart.
4. Always by means of tool No. 1.822.037.000 (A.5.0275) remove the outer screws.



ENGINE DISASSEMBLY

CYLINDER HEADS (continued)

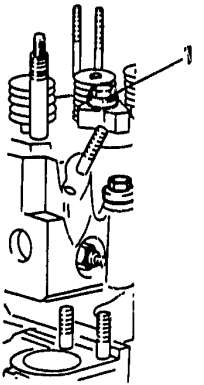

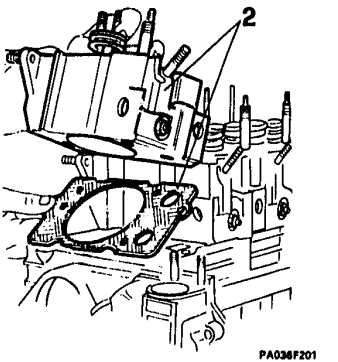

PA036F201

1. By means of tool No. 1.822.037.000 (A.5.0275) remove the inner screws.
2. Remove the cylinder heads along with the relevant gaskets.

When disassembling, mark the correspondance of each cylinder head with its gasket and cylinder, in order to make subsequent assembly operations easier.

ENGINE DISASSEMBLY (continued)

FRONT PULLEY

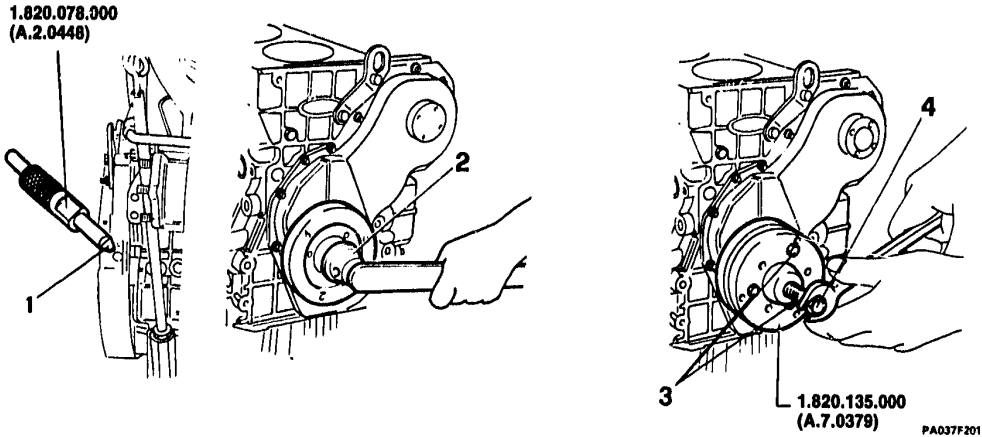

1. Block the flywheel rotation by means of tool No. 1.820.078.000 (A.2.0448) inserted in the special hole.
2. Remove the pulley fixing nut.
3. By means of three screws, secure tool No. 1.820.135.000 (A.7.0379) to the pulley.
4. Turn the screw and withdraw the pulley from its seat.

The tool fixing screws should not be too long not to interfere with the oil seal ring.

ENGINE DISASSEMBLY (continued)

FRONT COVER, OIL PUMP AND VACUUM PUMP

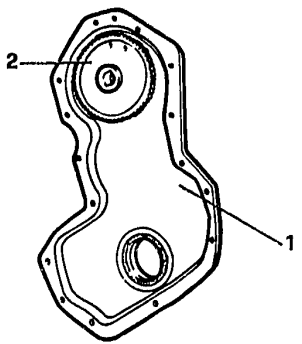

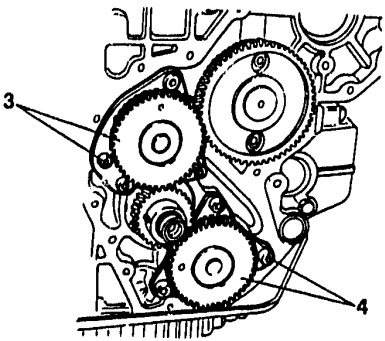

1. Loosen the screws and remove the front cover carefully detaching it from the engine block without bending it: insert a spatula between the engine block and the cover and apply a constant and even pressure until it comes away.

2. Dismantle tool No. 1.821.216.000 from the cover and keep apart the injection pump drive gear.

3. Unscrew the four screws and remove the vacuum pump with its drive gear.
4. Unscrew the three screws and remove the oil pump along with its drive gear.

ENGINE DISASSEMBLY (continued)
TIMING SYSTEM CONTROL AND OIL SUMP

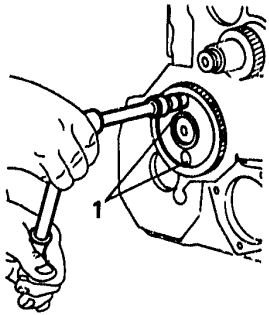

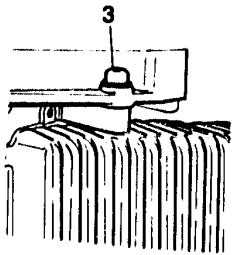

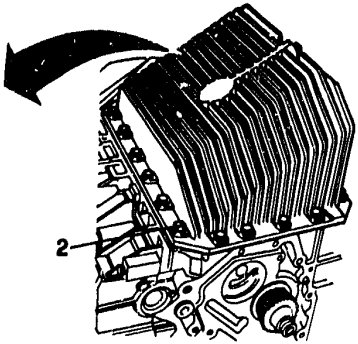

PA039P201

- Upturn the engine.

1. Unscrew the two screws and withdraw the camshaft from the cylinder block.
2. Remove the fixing screws.
3. Remove the screw placed on the engine coupling flange.

ENGINE DISASSEMBLY

TIMING SYSTEM CONTROL AND OIL SUMP (continued)

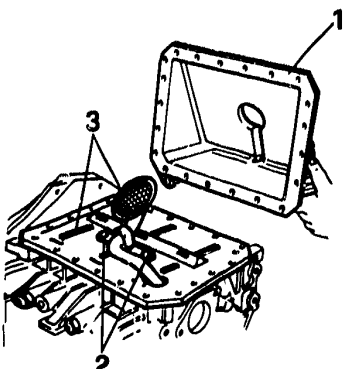

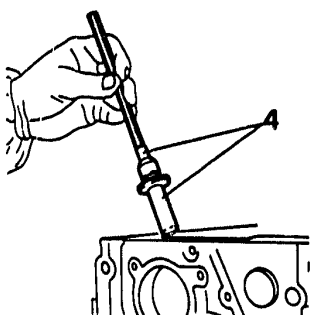

PA040F201

1. Lift and remove the oil sump.
2. Unscrew the two screws fixing the suction rose.
3. Remove the suction rose and the anti-splash plate.
4. By means of a magnetic tool, withdraw the tappets from their seats.

ENGINE DISASSEMBLY (continued)

COUNTERWEIGHT SHAFT

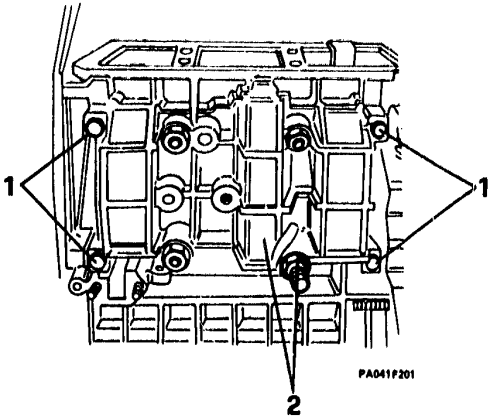

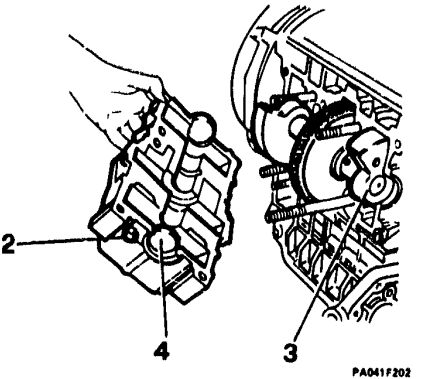

1. Unscrew the four screws fixing the crankcase.
2. Unscrew the four nuts and remove the crankcase and prevent the counterweight shaft from falling through the oil sump.
3. Withdraw the counterweigth shaft.
4. Remove the crankcase end plugs.

ENGINE DISASSEMBLY (continued)

PISTON-CONNECTING ROD ASSY

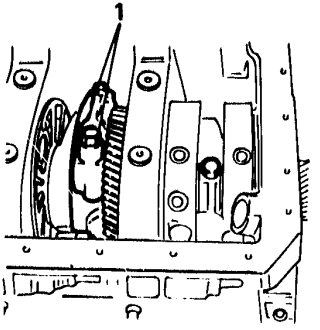

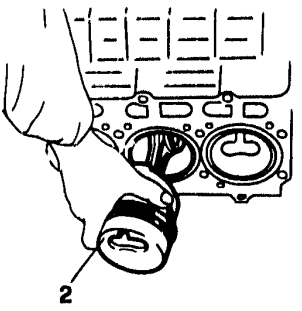

PA042F201

- With a suitable tool installed on the flywheel, rotate the crankshaft in order to reach the fixing screws of the connecting rod caps.

1. Unscrew fixing screws of the connecting rod caps.
2. Withdraw the connecting rods complete with pistons.

- Match the dismantled caps to the relevant connecting rods.

When disassembling, mark the position of the connecting rods according to the number of the cylinders.

ENGINE DISASSEMBLY (continued)

CYLINDER LINERS

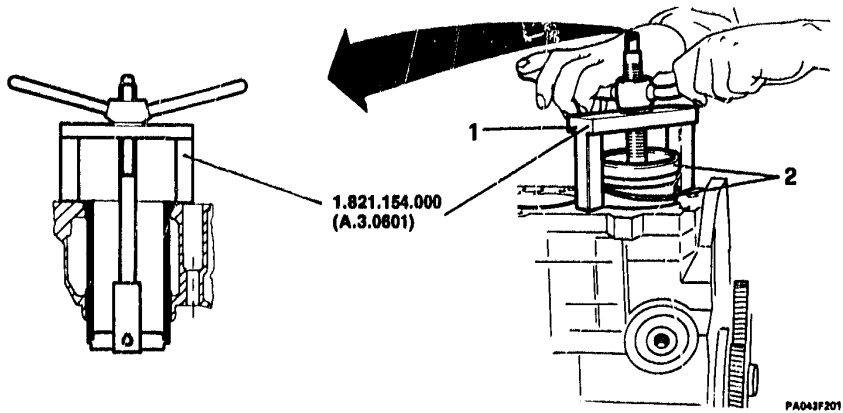

- Place the cylinder liners in an upward direction.
1. Apply tool No. 1.821.154.000 (A.3.0601).
2. Withdraw the liners and the shims and the sealing gaskets.

To extract the liner, position the tool arm according to the cylinder liner diameter.

Mark the liners according to the cylinder reference order.

ENGINE DISASSEMBLY (continued)
FLYWHEEL AND REAR JOURNAL

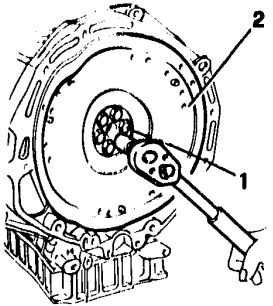

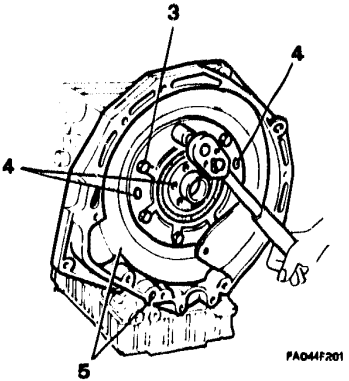

- Rmove from the flywheel the tool for the crankshaft rotation.
- Block the flywheel rotation

Mark flywheel and flange for a correct assembly.

1. Remove the six fixing screws.
2. Remove the blocking tool and the flywheel.
3. Unscrew the eight nuts
4. Insert and screw down two screws till withdrawing the rear journal.
5. Unscrew the four screws and the two nuts fixing the flange and remove it.

ENGINE DISASSEMBLY (continued)

CRANKSHAFT

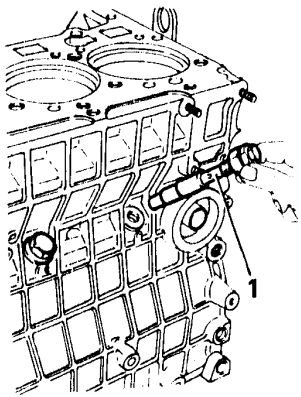

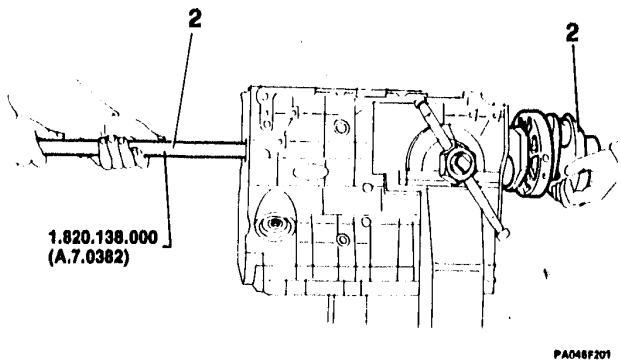

1. Unscrew and remove the lubrication unions.
2. Screw the tool No. 1.820.138.000 (A.7.0382) on the timing system end of the crankshaft.

- Cautiously withdraw the the crankshaft complete wit its journals without bumping into the cylinder block.

CYLINDER HEADS
DISASSEMBLY AND ASSEMBLY

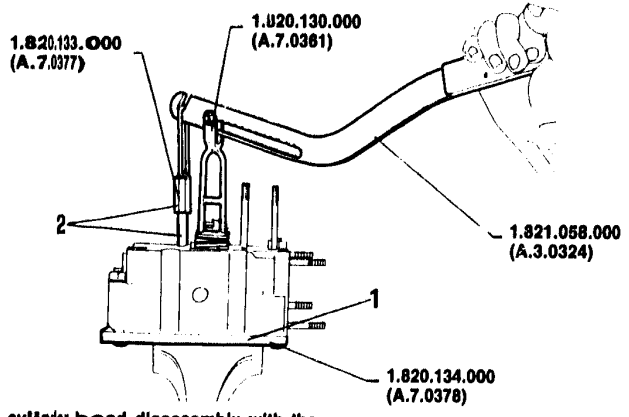

In case of cylinder head disassembly with the engine still on the vehicle, it is recommended never to perform any operation when the engine is hot, in order to avoid deformations.

1. By means of tool No. 1.820. 134.000 (A.7.0378) vice the cylinder head with the valve springs in an upward direction; then secure the head by tightening the bolts of the same tool.
2. Screw down the support No. 1.820.133.000 (A.7.0377) of lever No. 1.821.058.000 (A.3.0324) on the stud bolt fixing the rocker holding bracket.
3. Install cage No. 1.820.130.000 (A.7.0361) on lever No. 1.821.058.000 (A.3.0324).

CYLINDER HEAD
DISASSEMBLY AND ASSEMBLY (continued)

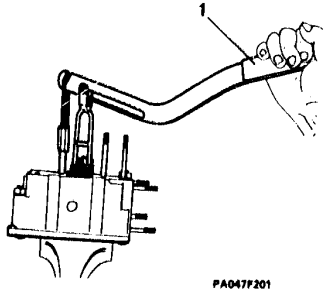

PA047F201

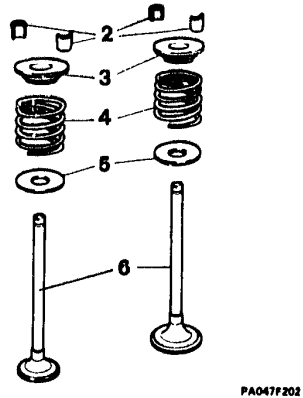

PA047F202

1. Act on the lever to release the cotters from the valve stem.
2. Remove the cotters.
3. Remove the upper cup.
4. Remove the spring.
5. Remove the lower plate.

Keep the removed cotters in a suitable container marked according to the cylinder number.

- Proceed in the same way for the other valve.

6. Take away the tools and remove the head from the support, pay attention to collect the intake and exhaust valves.

TURBODIESEL ENGINE

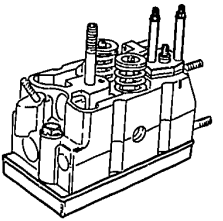

CHECKS AND INSPECTIONS

CHECKS AND INSPECTIONS

TIGHTNESS TEST ..... 01 - 52
CYLINDER HEAD AND VALVE GUIDE ..... 01 - 53
VALVE GUIDE REPLACEMENT ..... 01 - 54
VALVE SEATS ..... 01 - 57
SPRINGS ..... 01 - 61
VALVES ..... 01 - 62

CHECKS AND INSPECTIONS

TIGHTNESS TEST

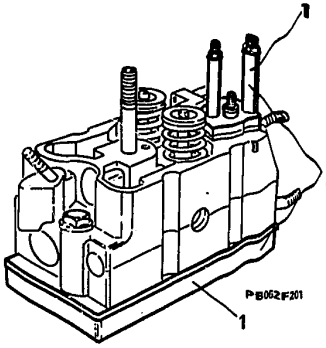

1.820.100.000 (A.2.0473)

Water temperature = 80° ÷ 90°C

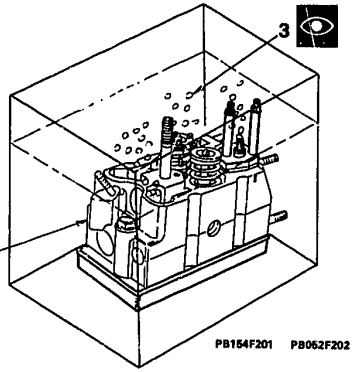

Visually check cylinder head for cracks or flaws.

1. Fit cylinder head to tool N° 1.820.100.000 (A.2.0473), using the screws for securing it to the engine block
- Blow air into cylinder head through check valve at the specified pressure.

Test pressure 7 bar

2. Submerge assembly in hot water.
3. Check that no bubbles form.
- If bubbles appear, there is a crack. It can be located more easily by rotating the assembly.

CHECKS AND INSPECTIONS (continued)

CYLINDER HEAD AND VALVE GUIDE

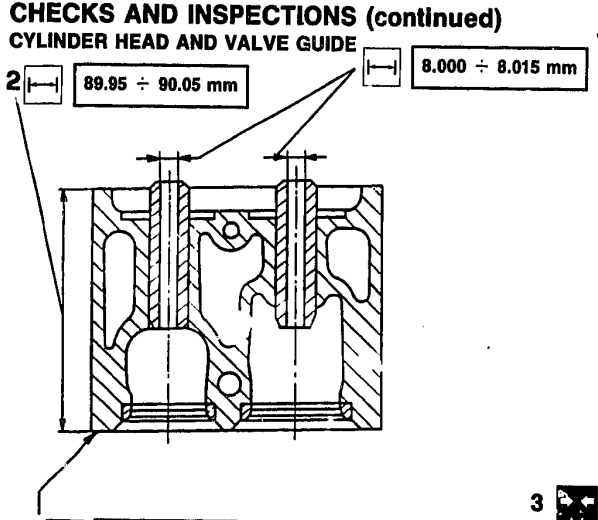

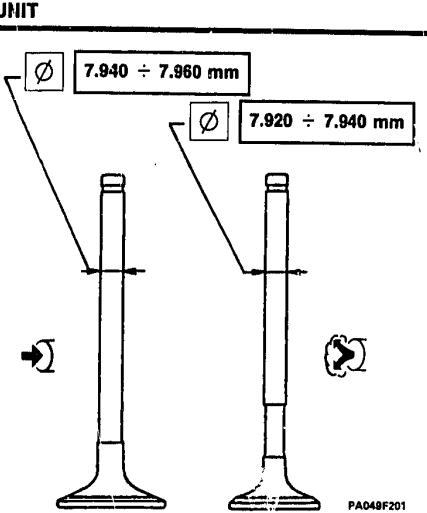

1. Check that the flatness of the cylinder head surface ranges within the prescribed values.
2. Check that the cylinder head height ranges within the prescriibed tolerance values.
3. Check that the clearance between the valve and valve guide ranges within the prescribed values.

CHECKS AND INSPECTIONS (continued)

VALVE GUIDE REPLACEMENT

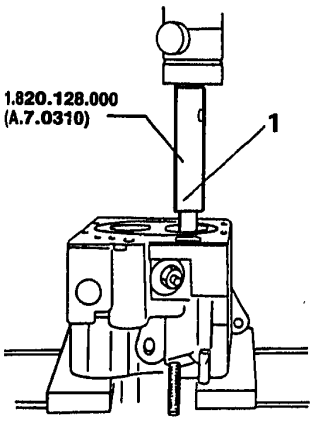

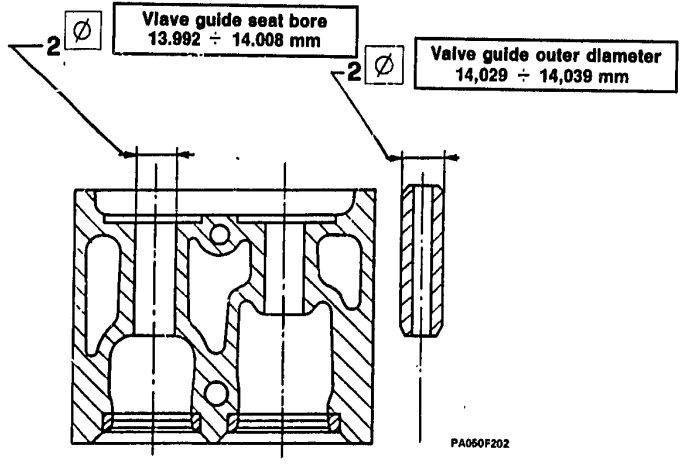

2 Interference between valve guide and seat
0.020 ÷ 0.047 mm

1. By means of tool No. 1.820.128.000 (A.7.0310), extract the worn valve guides.

2. Check that diameters of valve guides and relevant seat boreson the cylinder head are included in the tolerance values and in the prescribed intrference.

CHECKS AND INSPECTIONS

VALVE GUIDE REPLACEMENT (continued)

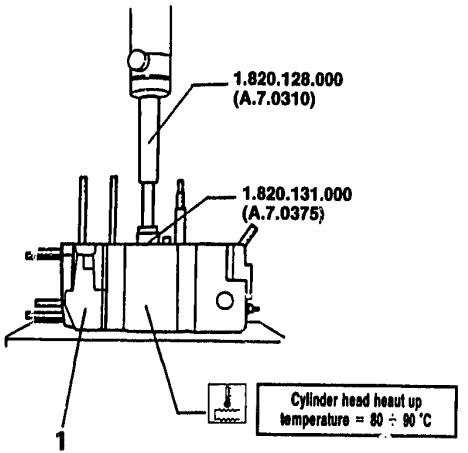

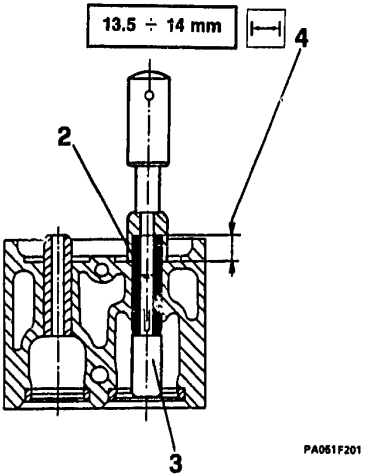

1. Heat up the cylinder head to the prescribed temperature
2. Insert the dowel pin of tool No. 1.820.131.000 (A.7.0375) into the end of the new valve guide.
3. By operating at the press, make use of bushing No. 1.820.131.000 (A.7.0375) and tool No. 1.820.128.000 (A.7.0310) to insert the valve guide till it stops against the bushing.
4. Check that the valve guide protrusion from the spring face is the prescribed one.

CHECKS AND INSPECTIONS
VALVE GUIDE REPLACEMENT (continued)

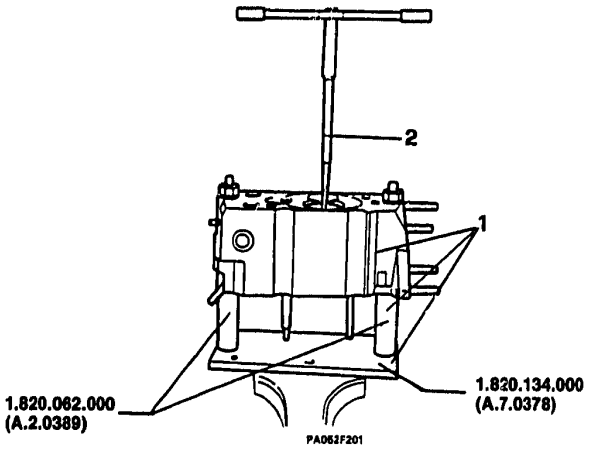

Ø	Valve guide bore reaming:
	Ø 8.000 ÷ 8.015 mm

1. Mount the cylinder head on tool No.1.820.134.000 (A.7.0378), secured in a vice and make use of spacers No. 1.820.062.000 (A.2.0389).
2. Ream the valve guide bore to the prescribbed value and check the side clearance

CHECKS AND INSPECTIONS (continued)

VALVE SEATS

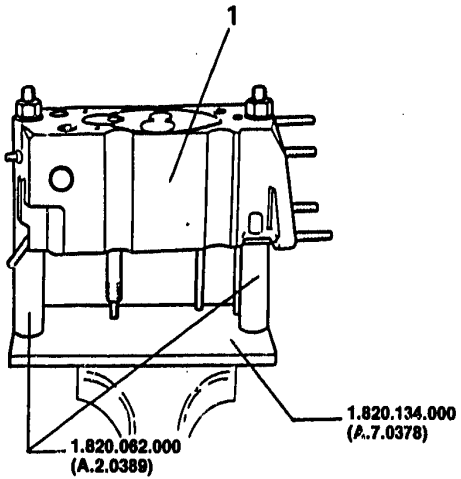

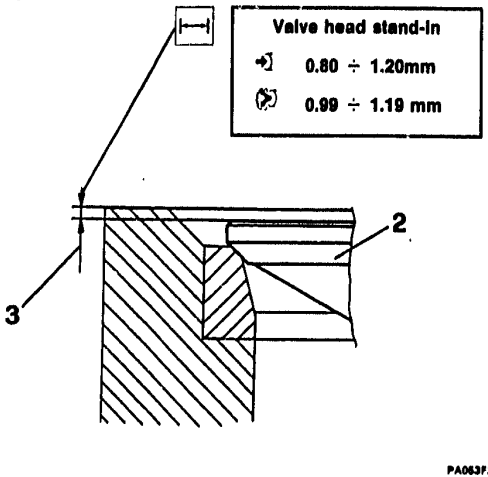

1. Mount the cylinder head on tool No. 1.820.134.000 (A.7.0378), secured in a vice and make use of spacers No. 1.820.062.000 (A.2.0389).
2. Insert the valves in the cylinder head.
3. Check that vaive head stand-in inside the cylinder head is the prescribed one.

CHECKS AND INSPECTIONS

VALVE SEATS (continued)

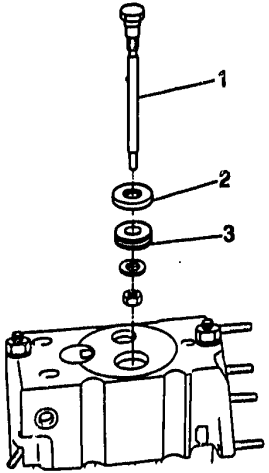

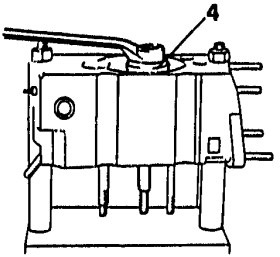

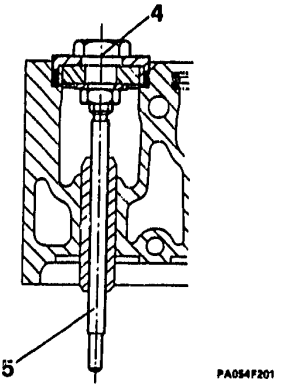

1. Choose a suitable spindle for valve seat oxtraction.
2. Insert a suitable stop ring.
3. Insert a tap dimensioned for the valve seat bore and block it with a nut and washer.
4. Fit the spindle and thread the valve seat till the stop ring abuts the valve seat surface, then loosen by half a turn.
5. Remove the cylinder head from the support and tap the end of the spindle till withdrawing the valve seat.

CHECKS AND INSPECTIONS

VALVE SEATS (continued)

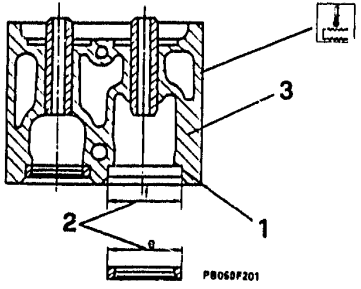

Cylinder head heat up temperature = 150 °C

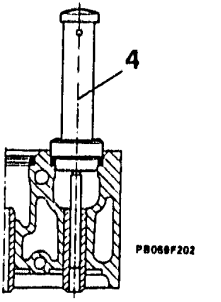

Valve seat-housing interference value	
	0.085 ÷ 0.124 mm
	0.062 ÷ 0.102 mm

Valve seat outer diameter "e"	Standard	Intake	42.070 ÷ 42.086
		Exhaust	36.050 ÷ 36.066
	Oversize	Intake	42.370 ÷ 42.386
		Exhaust	36.350 ÷ 36.366
Valve seat housing diameter "f"	Standard	Intake	41.962 ÷ 41.985
		Exhaust	35.964 ÷ 35.988
	Oversize	Intake	42.262 ÷ 42.285
		Exhaust	36.264 ÷ 36.288

1. Grind the valve seat housing is ovalized.
2. Determine the new valve seat outer diameter (e) and the housing bore (f), and check for the prescribed interference value.
3. Heat up the cylinder head to the prescribed temperature.
4. Insert the new intake and exhaust valve seats.

CHECKS AND INSPECTIONS

VALVE SEATS (continued)

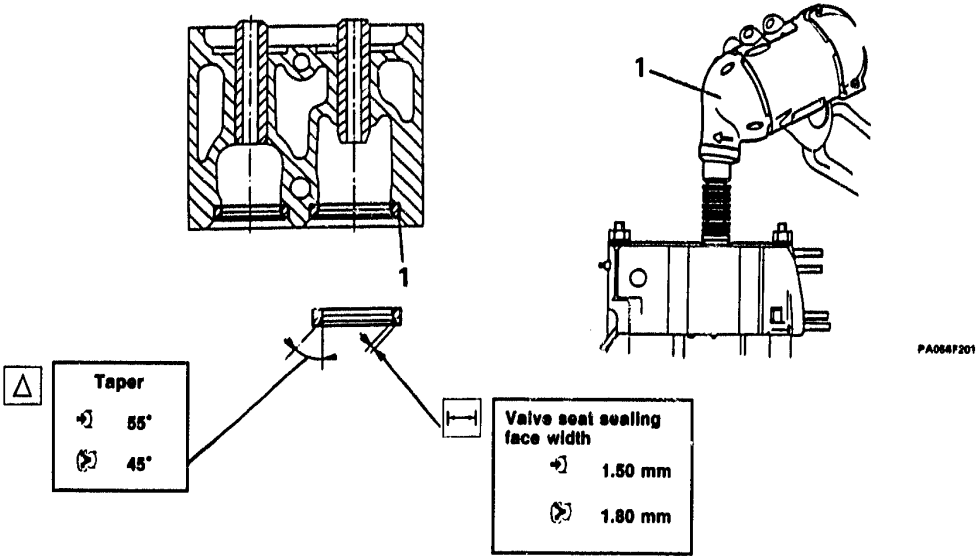

1. Allow the cylinder head to cool down and grind the valve seats to the prescribed values by means of a suitable tool.

CHECKS AND INSPECTIONS (continued)

SPRINGS

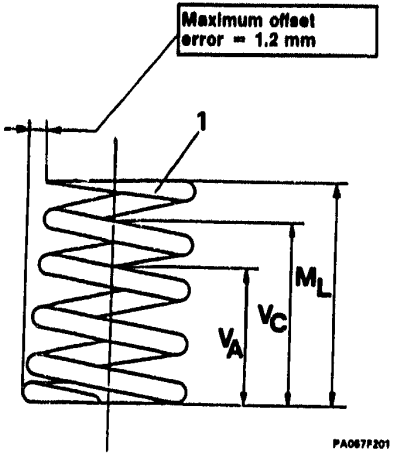

	Length mm	Test load N (Kg)
Unloaded spring length ML	44.65	-
Closed valve Vc	38.6	324 ÷ 343 (33 ÷ 35)
Open valve VA	28.2	883 ÷ 932 (90 ÷ 95)

1. Check that the structural and elastic features of the springs are included within the prescribed values, otherwise replace them.

CHECKS AND INSPECTIONS (continued)

VALVES

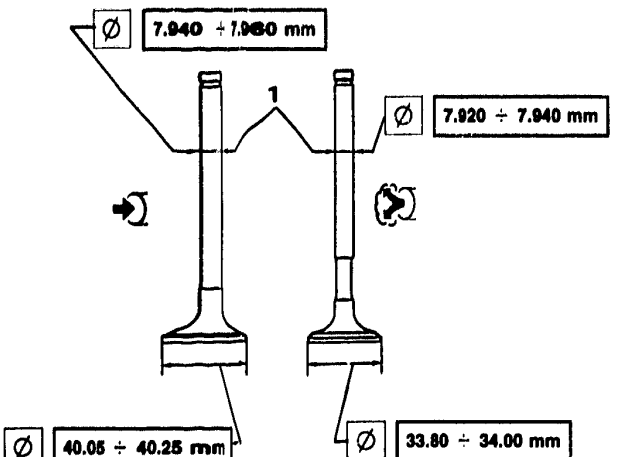

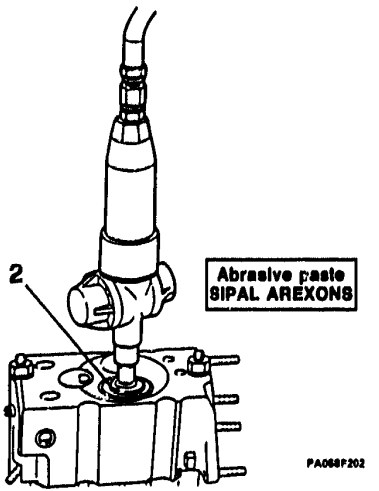

- Clean the valves and check if in perfect conditions.

1. Check that valve dimensions range within the prescribed values, otherwise replace them.
2. Apply the specified abrasive paste to the sealing face of valves and seats. Moisten valve stems with engine oil, apply the suction pad of a pneumatic grinder to the valve head and operate the gringer with the valve being in its seat.

- Thoroughly clean valves and seats.

TURBODIESEL ENGINE

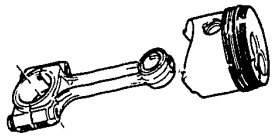

CHECKS AND INSPECTIONS (continued)

CHECKS AND INSPECTIONS

ROCKERS ..... 01 - 63
PUSH RODS AND TAPPETS ..... 01 - 64
CYLINDER LINERS ..... 01 - 65
PISTONS ..... 01 - 66
PISTON-PISTON PIN FIT ..... 01 - 67
PISTON RINGS ..... 01 - 68
CONNECTING RODS ..... 01 - 70

CHECKS AND INSPECTIONS (continued)

ROCKERS

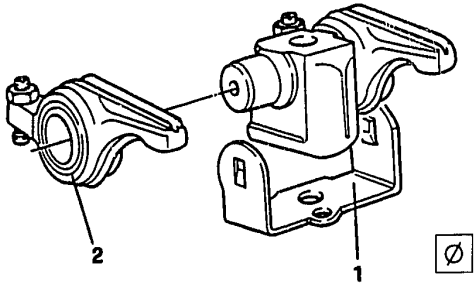

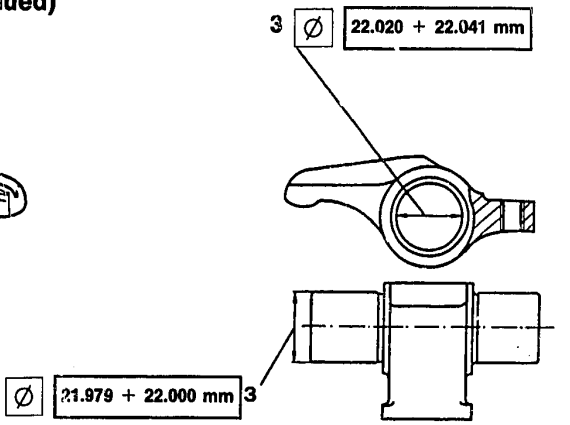

Side clearance between rocker and rocker shaft.

new	0.020 ÷ 0.062 mm
maximum wear	0.20 mm

1. Remove the spring retainer.
2. Withdraw the rockers and clean them.
3. Check for rocker and rocker shaft dimensions.

CHECKS AND INSPECTIONS (continued)

PUSHRODS AND TAPPETS

Side clearance between tappets and seat.
new 0.025 ÷ 0.070 mm
maximum wear 0.10 mm

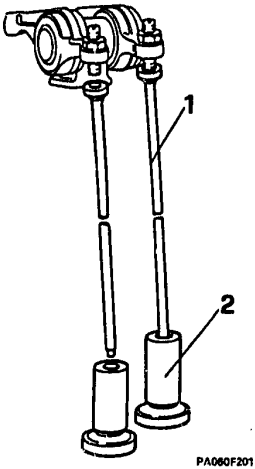

PA060F201

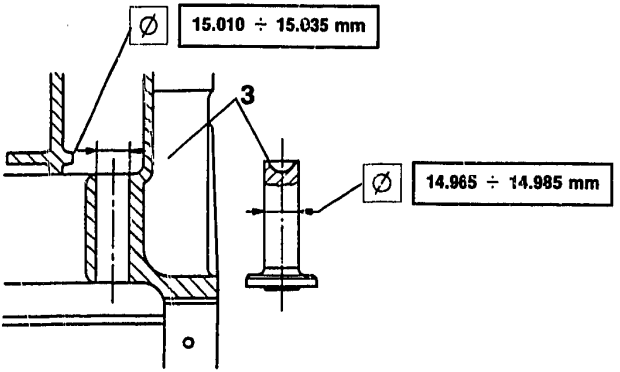

PA060F202

1. Check that the pushrods are straight and the working surfaces are free from dents.
2. Check that the tappet working surfaces are free from scores. light scratches may be removed by using an oil stone.
3. Check that tappet and relevant seat dimensions are the prescribed ones.

CHECKS AND INSPECTIONS (continued)

CYLINDER LINERS

- Remove shims and sealing gaskets from the the cylinder liners.

1. Measure bores "X" and "Y", atright angles from one another, at three different heights indicated in figure and check that the detected values range within the prescribed tolerances.

- If light scratches are detected and the wear does not exceed by 0.010 mm nominal dimensions, simply renew the rings and restore the original roughness by dressing the liner inner surface with fine emery cloth soaked in fuel to be applied in spiral movements until a crossed line roughness of 0.8 ÷ 1.2 µm is obtained.
- If wear exceeds 0,010 mm the liner-piston-ring assembly must be replaced.

Ø	**Cylinder liner diameter (class A)** **92.000 ÷ 92.010 mm**

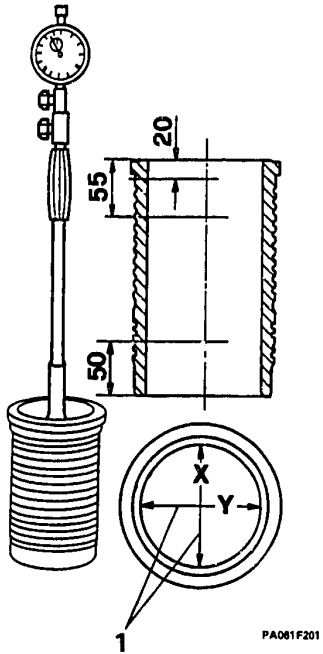

CHECKS AND INSPECTIONS (continued)

PISTONS

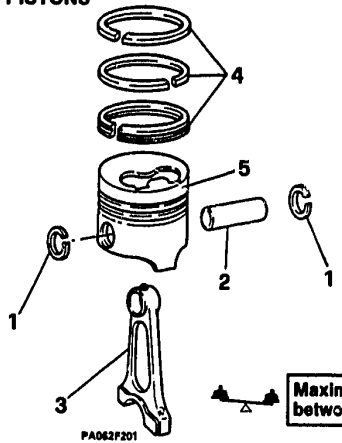

Maximum weight difference between pistons S g

Clearance between piston and liner (at maximum wear) 0.5 mm

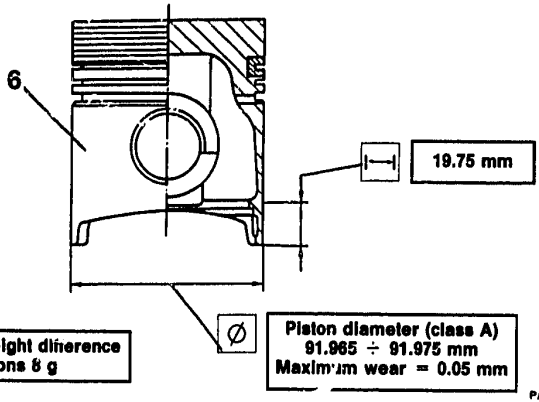

1. Remove the piston pin snap rings.
2. Withdraw the piston pin.
3. Remove and keep apart the connecting rod.
4. Remove the piston rings and the oil scraper ring.
5. Clean the piston and check for the absence of scratches.
6. Determine the piston diameter, at right angle as to the piston pin axis, at a distance of 19.75 mm from the skirt lower edge. Check that this dimension ranges within the prescribed tolerance values.

- Incase the clearance between piston and cylinder liner exceeds the prescribed one, replace the liner-piston-rings assy.
- Check that the difference in weight in a set of four pistons does not exceed 8g.

CHECKS AND INSPECTIONS (continued)

PISTON-PISTON PIN FIT

Check that the piston pin and its housing do not show scratches or seizure marks, otherwise replace them.

1. Check that the piston pin seat hole is not ovalized by more than 0.05 mm (maximum wear).
2. Check that matching diameters of piston pin-seat range within the specified tolerance limits.

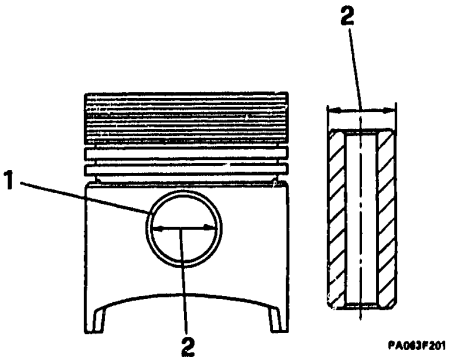

Piston pin seat diameter	Piston pin diameter
30.002 ÷ 30.007 mm	29.990 ÷ 29.996 mm

Piston pin seat maximum ovalization = 0.05 mm

Weight difference between components of a set of three pistons:

≤18 g

CHECKS AND INSPECTIONS (continued)

PISTON RINGS

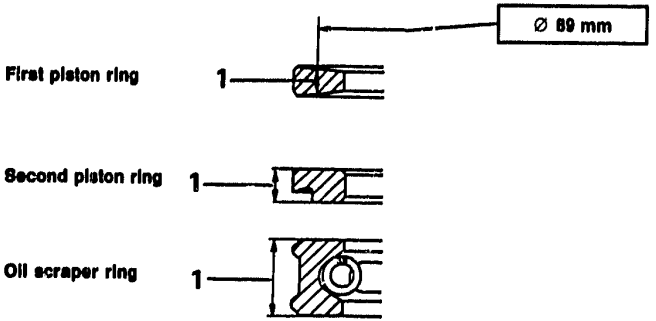

Piston ring and oil scraper ring thickness (mm)	
First piston ring	2.075 ÷ 2.095
Second piston ring	1.978 ÷ 1.990
Oil scraper ring	3.978 ÷ 3.990

1. Check that piston ring and oil scraper ring thickness ranges within the prescribed tolerance values.

Piston ring and oil scraper ring gap (mm)	
First piston ring	0.400 ÷ 0.650
Second piston ring	0.250 ÷ 0.450
Oil scraper ring	0.250 ÷ 0.580

2. Insert the piston rings into the cylinder liner and check that they adhere allong all the circumference, and that the gap ranges within the prescribed tolerances.

CHECKS AND INSPECTIONS

PISTON RINGS (continued)

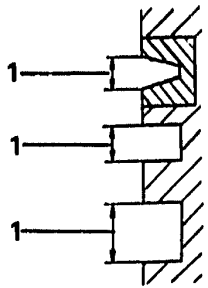

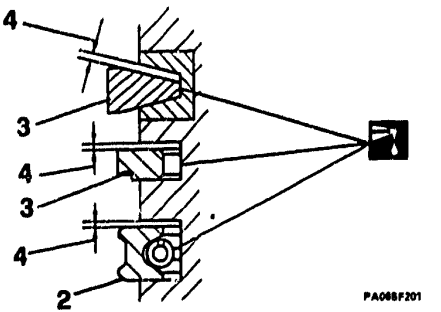

Piston ring seat height (mm)	
First piston ring	2.175 ÷ 2.205
Second piston ring	2.060 ÷ 2.080
Oil scraper ring	4.020 ÷ 4.040

Piston rings - seats axial clearance (mm)	
First piston ring	0.080 ÷ 0.130
Second piston ring	0.070 ÷ 0.102
Oil scraper ring	0.030 ÷ 0.062

1. Remove all carbon deposits from the piston grooves and check that the groove heights range within the tolerance values.
2. Refit the oil scraper ring with the spring junction staggered by 180° as to the ring gap.
3. Refit the second and first piston ring with the gaps staggered by 90°.
4. Check that the piston ring axial clearance ranges within the prescribed tolerance values.

CHECKS AND INSPECTIONS (continued)

CONNECTING RODS

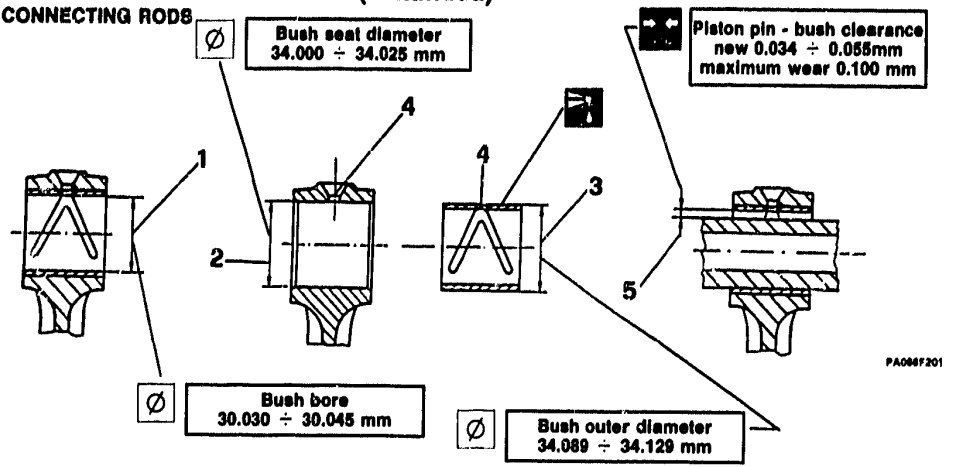

- Check the connecting rods for traces of wear or cracks.

1. Check that the small end bush bore ranges within the prescribed tolerance values, otherwise replace the bush.

NOTE The spare small end bushes are supplied with a 0.2 mm of machining allowance.

2. Check that the small end bush seat bore is the prescribed one.
3. Check that the bush outer diameter is the prescribed one.
4. Insert the new bush by matching the lubrication hole with the one on the connecting rod.
   - Ream the bush bore till obtaining the prescribed value.
5. Check that the piston pin - bush clearance is the prescribed one.

CHECKS AND INSPECTIONS

CONNECTING RODS (continued)

Maximum weight difference between connecting rods ≤ 10 g

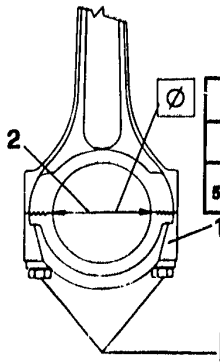

Bearing seat bore.		
Standard	Undersize 1st	Undersize 2nd
53.977 ÷ 54.016	53.725 ÷ 53.764	53.475 ÷ 53.514

// Parallelism maximum error between connecting rods = 0.05 mm

79.4 ÷ 84.3 Nm (8 ÷ 8.6 Kgm) with Molyguard LMP/180 oil

P8071F201

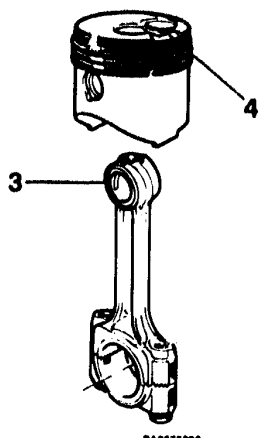

PA067F202

1. Mount the cap on the connecting rod by matching the reference marks.
2. Check that the bearing seat bore in the big end, measured at three different points, is the prescribed one: if the diameter is larger by 0.02 mm than specified, replace the connecting rods.

- Check axis alignment of each connecting rod, misalignement should not exceed 0,05 mm measured outside the small end at a distance of 100 mm from the connecting rod body.
- Check that weight difference between connecting rods does not exceed 10 g.

3. Locate the notch on the connecting rod small end.
4. Assemble piston and connecting rod so that the combustion chamber results to be opposed to the small end notch.

NOTE **Slightly heat up the piston in order to make piston pin insertion easier.**

TURBODIESEL ENGINE

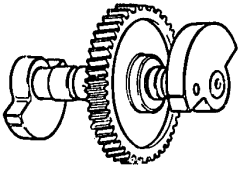

CHECKS AND INSPECTIONS (continued)

CHECKS AND INSPECTIONS

CRANKSHAFT ..... 01 - 72
MAIN BEARINGS ..... 01 - 75
CONNECTING ROD BEARINGS ..... 01 - 76
PISTON LUBRICATING VALVES ..... 01 - 77
SHIM RINGS ..... 01 - 78
CAMSHAFT ..... 01 - 79
CYLINDER BLOCK AND FRONT COVER ..... 01 - 82
FLYWHEEL ..... 01 - 83
COUNTERWEIGHT SHAFT ..... 01 - 84
LUBRICATION SYSTEM COMPONENTS ..... 01 - 85
Oil pump ..... 01 - 85
Suction rose and oil pressure relief valve ..... 01 - 87

CHECKS AND INSPECTIONS (continued)

CRANKSHAFT

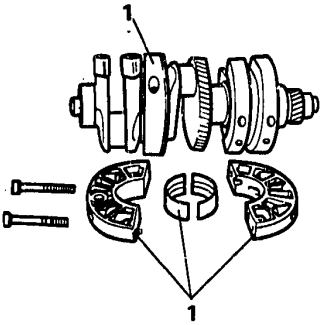

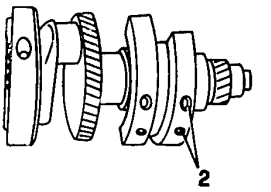

PA068F201

1. Remove the two journals from the crankshaft, by keeping apart the bearings.

Only of strictly necessary, remove the counterweights, as even the replacement of one screw requires the shaft to be re-balanced.

2. If necessary, remove the counterweights by unscrewing the screws indicated in the figure.

CHECKS AND INSPECTIONS
CRANKSHAFT (continued)

1. Should the replacement of crankshaft gear be necessary, operate by means of tool No. 1.821.049.000 (A.3.0306).

- Check the crankshaft in all its parts and replace it if necessity will be.

The oil seal rings shall be replaced in any case.

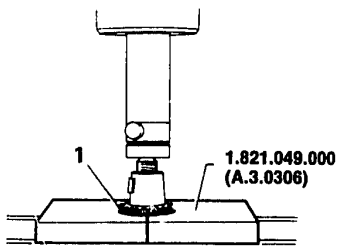

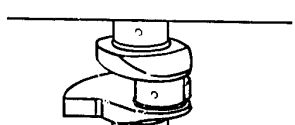

PA069F201

CHECKS AND INSPECTIONS

CRANKSHAFT (continued)

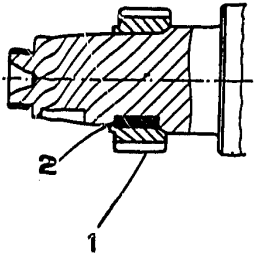

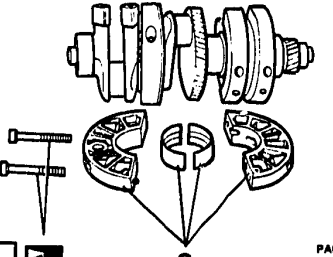

Timing system control gear heat up temperature = 180 ÷ 200 °C

- Carry out the crankshaft dimensional checks according to the data specified in the TECHNICAL DATA AND SPECIFICATIONS. Should main journal and crankpin ovality and taper exceed the prescribed values, grind the crankshaft to the undersize values indicated, and mount the corresponding undersize bearings.
- Replace the oil seal rings.

1. Heat the ceankshaft gear to a temperature of 180 ÷ 200 °C.
2. Press the gear fully home on the crankshaft, taking care to align the key with the keyway.
3. Mount the main journals complete with main bearings, with the lubricating valves facing onwards.

CHECKS AND INSPECTIONS (continued)

MAIN BEARINGS

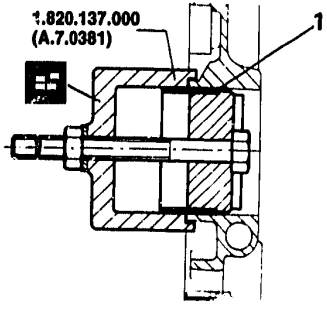

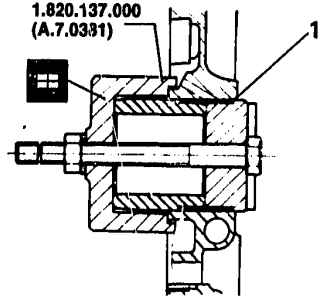

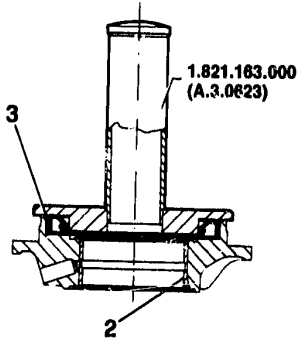

PA071F201

NOTE Standard or undersize main bearings are supplied according to the customer's requirement and do not need any reaming operation.

- Carry out the dimensional checks on the main bearings according to the data specified in the TECHNICAL DATA AND SPECIFICATIONS; measurements must be carried out on two diameters at right angles.

1. Replacement of cylinder block front main bearing must be carried out by means of tool No. 1.820.137.000 (A.7.0381).
2. The rear main bearing is supplied complete with main journal.
3. Insert the oil seal ring in the rear main journal by means of tool No. 1.821.163.000 (A.3.0623).

CHECKS AND INSPECTIONS (continued)

CONNECTING ROD BEARINGS

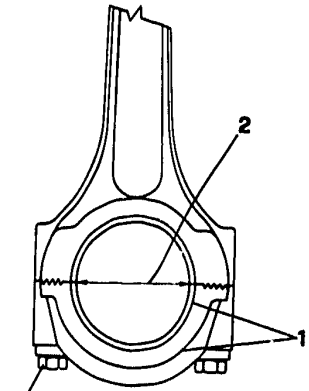

Ø	Connecting rod bearing bore		
	Standard bearing		53.977 ÷ 54.016 mm
	Undersize bearing	1st	53.725 ÷ 53.764 mm
		2nd	53.475 ÷ 53.514 mm

Radial clearance between crankpins and bearings	
new	0.022 ÷ 0.076 mm
maximum wear	0.200 mm

1. Fit the bearings in the connecting rod big ends and tighten the cap fixing screws.
2. Measure bearing bore diameter in two different points at right angles and check if the values range within the prescribed tolerances.

- Check that the side clearance between crankpins and bearings ranges within the prescribed limits.

CHECKS AND INSPECTIONS (continued)
PISTON LUBRICATING VALVES

Piston lubricating valve opening pressure:
147 ÷ 196 kPa (1.5 ÷ 2 Kg/cm²)

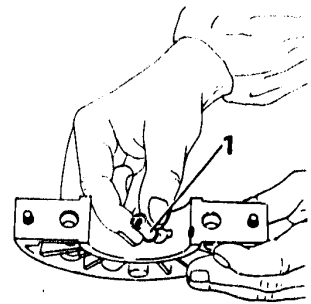

PA073F201

1. Using a compressed air line, check that piston lubricating valves, located on central and rear main journals, open at the specified pressure.
- In case of valve removal from the central main journals, remove the chamfer and extract the valve by means of a punch;after inserting the new valve, perform three caulking at three equidistant points (120°).
- Should the valve on the rear main journal fail to operate, it is necessary to replace the whole main journal.

CHECKS AND INSPECTIONS (continued)

SHIM RINGS

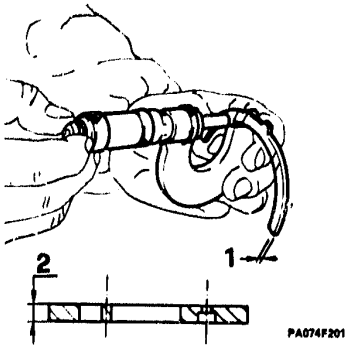

Shim ring thickness		
Standard		2.311 ÷ 2.362 mm
Oversize	1st	2.411 ÷ 2.462 mm
	2nd	2,511 ÷ 2,562 mm

Shoulder flange thickness
7.90 ÷ 8.10 mm

1. Check shim ring thickness at four diametrically opposed points.

NOTE Thickness must be oven and correspond to the values specified in the table.

2. Check that the crankshaft shoulder flange thickness ranges within the prescribed tolerance values.

CHECKS AND INSPECTIONS (continued)

CAMSHAFT

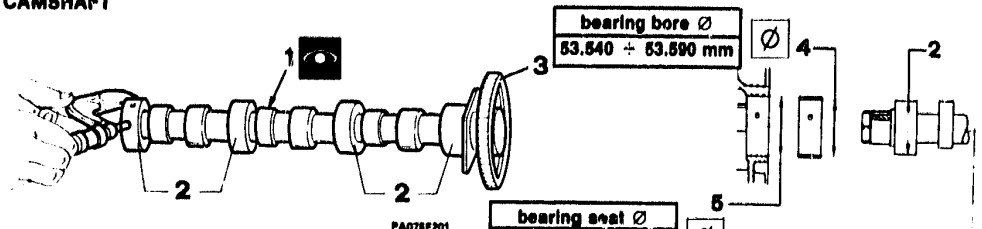

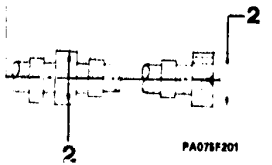

Side clearance between journals and bearings	
New	0.040 ÷ 0.110 mm
Maximum wear	0.200 mm

Journals
53.480 ÷ 53.500 mm

1. Check the camshaft for integrity.
2. Measure the diameter of the camshaft journals and check that the values range within the prescribed ones.
   - Light scratches or dents may be removed by using an extra-fine oil stone.
3. Should it be necessary, replace the gear.
4. Check that the main bearing bore diameter ranges within the prescribed values.
5. Check that main bearing seat diameter ranges within the prescribed values.

CHECKS AND INSPECTIONS

CAMSHAFT (continued)

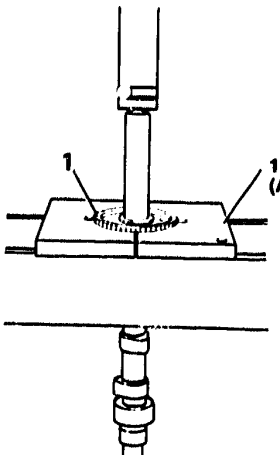

1. Extract the camshaft gear by using two half plates No. 1.821.039.000 (A.3.0295) and a punch.
2. Keep apart the abutment flange and check that its thickness,measured at four diametrically opposed points, ranges within the prescribed values; otherwise replace it.

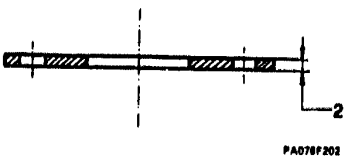

Abutment flange thickness
3.950 ÷ 4.050 mm

Timing gear heat up temperature = 180 ÷ 200 °C

- Fit the plate on the camshaft.
- Heat the new gear up to 180 ÷ 200 °C and install it.
- Check that the flange rotates freely after the gear has cooled down.

CHECKS AND INSPECTIONS

CAMSHAFT (continued)

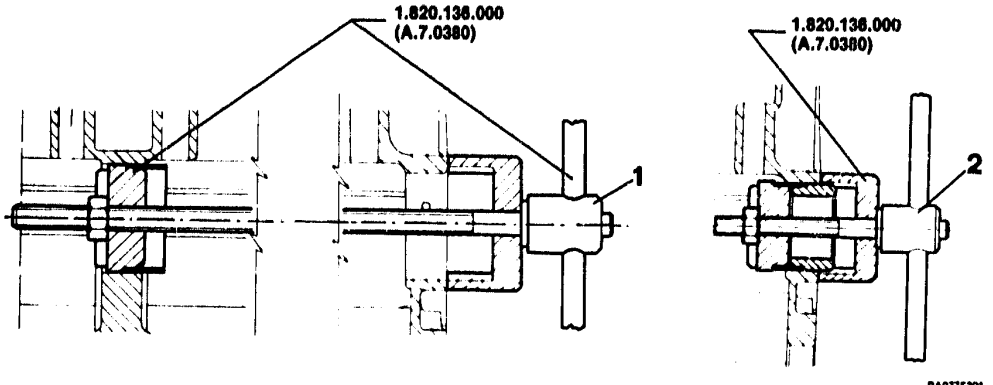

1. Extract the bearings by means of tool No. 1.820.136.000 (A.7.0380).

2. Refit new bearings by using the same tool and paying attention to match the lubricating ports with the ones on the cylinder block.

CHECKS AND INSPECTIONS (continued)
CYLINDER BLOCK AND FRONT COVER

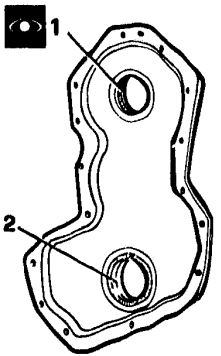

PA07BF201

- Carefully clean the cylinder block and check the cylinder liner and head faces for integrity.
- Ensure that the threaded holes are free from foreign matters and dents and that the lubricating ducts are absolutely clean.

- Clean the mating surfaces of the cover and engine block and grease.
- Clean and grease the cover.

1. Examine the thread and if it is damaged, replace the cover.
2. Remove the oil seal ring and check the conditions of its seat.

- Refit a new oil seal ring.

CHECKS AND INSPECTIONS (continued)

FLYWHEEL

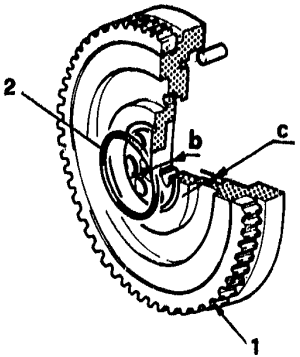

PA079F201

nominal dimension "b" between clutch driven disc mating surface and flywheel contact face with crankshaft $29\ ^{0}_{-0.10}$ mm
removal of material "c": max 1 mm
dimension "b" after grinding: min. $28\ ^{0}_{-0.10}$ mm
Roughness of flywheel clutch disc contact face 1,2 µm

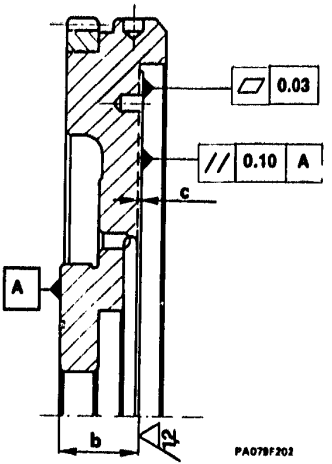

PA079F202

1. Check that crown gear teeth are in good conditions, should it be necessary, remove it by means of a suitable tool.
- Refit a new crown gear by hot interference fit, at a temperature of 190 ÷ 210 °C, obtained by keeping the crown gear in an oven for maximum 20 minutes.
- Check the mating surface with the shims, smooth it if necessary.
2. Check the conditions of the O-ring and its seat.
- In case of grinding of the clutch driven disc mating surface, observe the values in the drawing.

CHECKS AND INSPECTIONS (continued)

COUNTERWEIGHT SHAFT

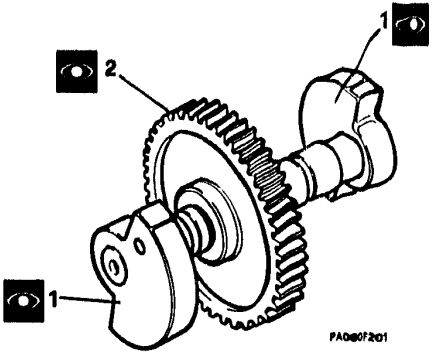

Replacement of weights or drive gear always needs re-balancing of the shaft.

1. Check balancing weights for integrity, should replacement be necessary, make use of a press and, to refit new weights, heat them before installation.
2. Check drive gear for integrity and replace it if necessary.

- Check counterweight shaft dimensions by referring to the data specified in the TECHNICAL DATA AND SPECIFICATIONS

LUBRICATION SYSTEM COMPONENTS

Oil pump

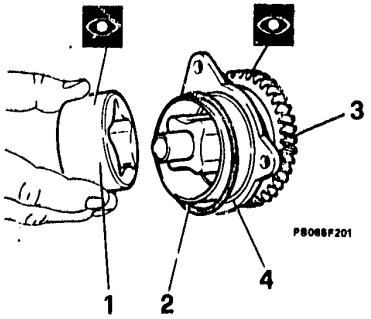

1. Remove the outer rotor and check its integrity.
2. Remove the oil seal ring.
3. Check the pump drive gear for integrity.
4. Check the support for integrity.
- Check that the above-mentioned dimensions range within the prescribed tolerances; otherwise replace the whole pump unit.

LUBRICATION SYSTEM COMPONENTS
Oil pump (continued)

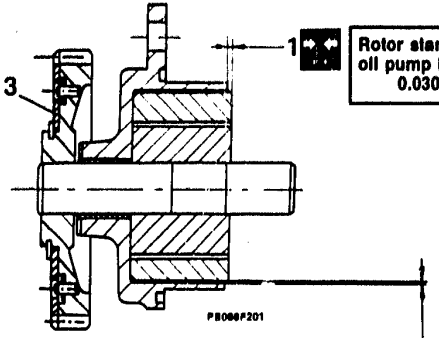

Rotor stand-out from oil pump housing
0.030 ÷ 0.073 mm

Clearance between outer and inner rotor
0.070 ÷ 0.20 mm

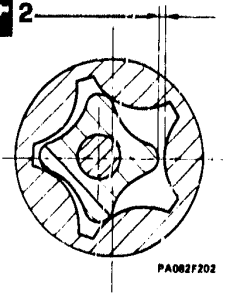

End float between gear and pump body
0.05 ÷ 0.07 mm

4

Clearance between oil pump outer rotor and housing
New 0.130 ÷ 0.185 mm
Maximum wear 0.50 mm

1. Install the outer rotor with the chamfer facing towards the gear and check that the rotor stand-out from the oil pump housing is the prescribed one.
2. Check the backlash between inner and outer rotors of the oil pump.
3. Check the load of backlash take-up gear ring.
4. Check that the clearance between housing and oil pump outer rotor.
   - Fit the new oil seal in the groove.

LUBRICATION CIRCUIT COMPONENTS (continued)

Suction rose and oil pressure relief valve

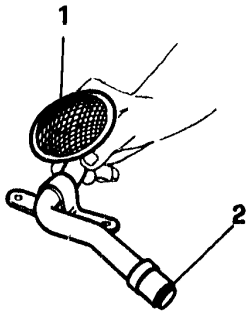

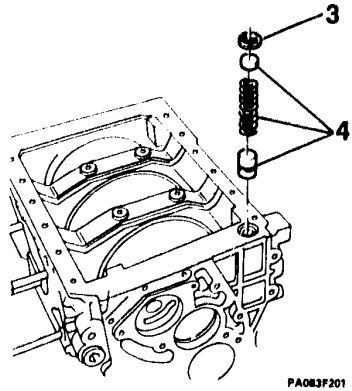

1. Check that the wire gauze is not clogged.
2. Replace the oil seal ring.
- In order to gain access to the pressure relief valve, dismantle the oil sump
3. Remove the retaining ring.
4. Withdraw the plate, the spring and the plunger.

- Check that the spring load ranges within the prescribed values specified in the TECHNICAL DATA AND SPECIFICATIONS
- Check that the plunger slides properly in its seat and for the integrity of the seal side surface.

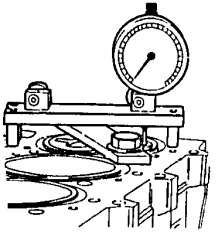

TURBODIESEL ENGINE

ENGINE UNIT RE-ASSEMBLY

ENGINE UNIT - RE-ASSEMBLY

ENGINE UNIT - GEARBOX COUPLING FLANGE
CRANKSHAFT AND FLYWHEEL ..... 01 - 88
CRANKSHAFT END FLOAT ..... 01 - 91
CYLINDER LINERS ..... 01 - 92
PISTON-CONNECTING ROD ASSY ..... 01 - 95
CYLINDER HEAD GASKET ..... 01 - 98
INTAKE AND EXHAUST MANIFOLDS ..... 01 - 100
TIGHTENING CYLINDER HEADS ..... 01 - 101

ENGINE UNIT RE-ASSEMBLY

ENGINE UNIT - GEARBOX COUPLING FLANGE. CRANKSHAFT AND FLYWHEEL

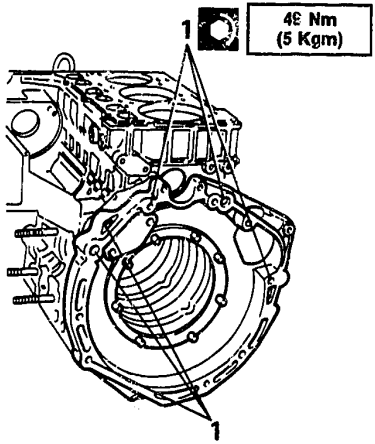

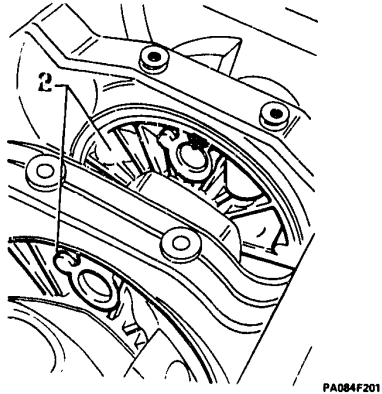

1. Install and secure the flange by tightening the nuts and the screws to the prescribed torque.
- By using the special tool No. 1.820.138.000 (A.7.0382) insert the crankshaft complete with its journals into the cylinder block

2. Rotate the central main journals till positioning downwards the hole indicated in figure, then insert and tighten the lubrication valves into the cylinder block.

ENGINE UNIT RE-ASSEMBLY

ENGINE UNIT - GEARBOX COUPLING FLANGE. CRANKSHAFT AND FLYWHEEL (continued)

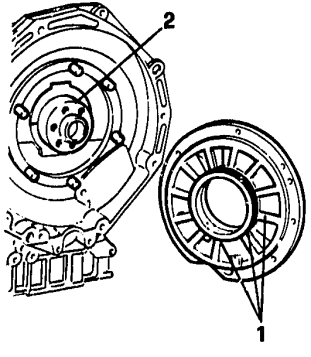

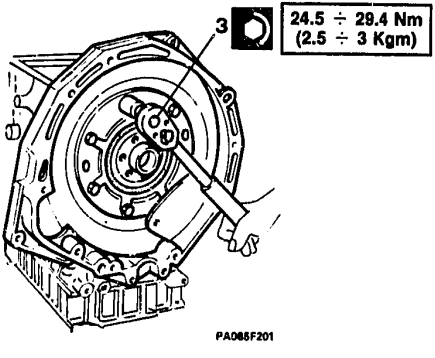

1. Fit a new gasket and a new oil seal ring on the rear main journal.
2. Install the shim rings.
3. Install the rear main journal and match the lubrication hole with the one machined on the cylinder block and tighten the eight nuts to the prescribed torque.



ENGINE UNIT RE-ASSEMBLY

ENGINE UNIT - GEARBOX COUPLING FLANGE. CRANKSHAFT AND FLYWHEEL (continued)

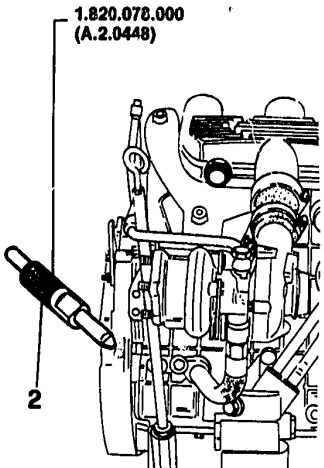

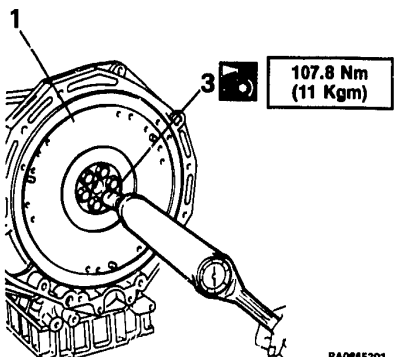

1. Install the flywheel and position it so as to match the reference marks engraved when disassembling.
2. Block flywheel rotation by inserting tool No. 1.820.078.000 (A.2.0448) in the special hole machined on the engine unit - gearbox coupling flange.
3. Moisten the fixing screws with oil and tighten them to the prescribed torque.

ENGINE UNIT RE-ASSEMBLY (continued)

CRANKSHAFT END FLOAT

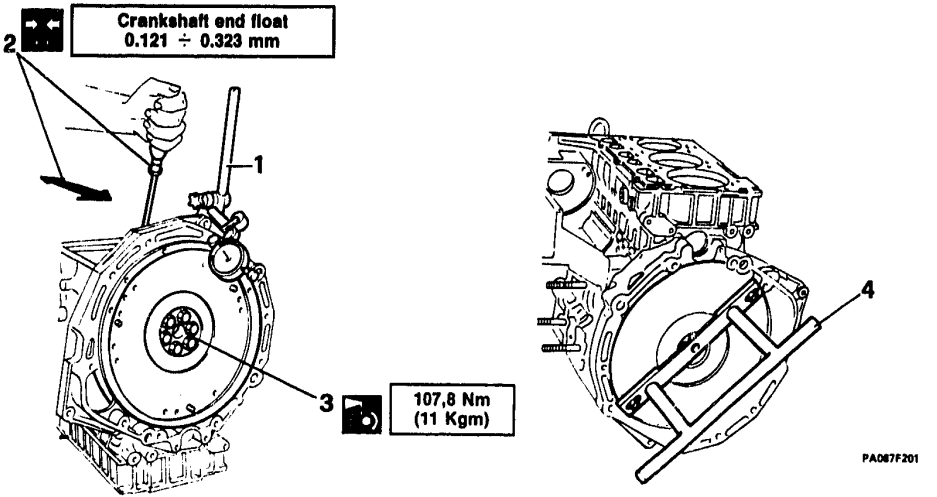

1. Install a magnetic-base comparator.
2. By acting with a screwdriver, check that the end float ranges within the prescribed values; should the detected value be higher, replace the shim rings with thicker ones.
3. Tighten the flywheel fixing screws to the prescribed torque and remove the tool No. 1.820.078.000 (A.2.0448)
4. Install the tool for the crankshaft rotation.

ENGINE UNIT RE-ASSEMBLY (continued)

CYLINDER LINERS

- Clean the cylinder liners and engine block of residues of LOCTITE resulting from the previous fitting.
- Degrease the engine block around the mating surfaces with the cylinder liner.

1. Position the cylinder liner in the engine block, rotating it by ~ 45° in both directions to ensure that it is positioned correctly.

- Apply a centesimal dial gauge to the gauge N°1.825.017.000.

2. Using the dial gauge, check that the liner recess is within the specified limits.

A = 0,09 ÷ 0,23 mm

Value measured on the precombustion chamber side

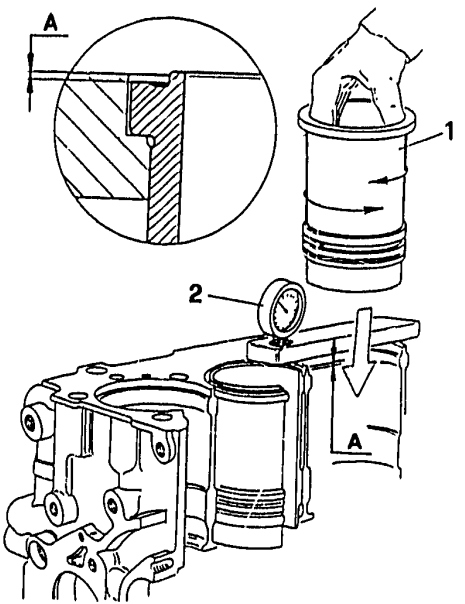

ENGINE UNIT RE-ASSEMBLY

CYLINDER LINERS (continued)

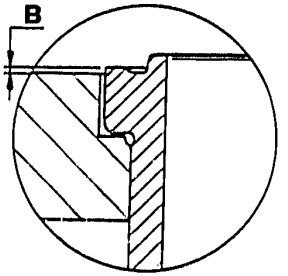

- Choose the thickness of the shim on the basis of value "A" in order to obtain the correct protrusion value.

B = 0.01 ÷ 0.06 mm

1. Remove the liner and insert the shim and sealing gaskets.

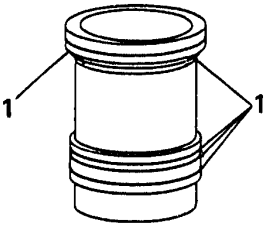

ENGINE REASSEMBLY

CYLINDER LINERS (continued)

1. Wipe the engine block with engine oil in the centering area below the liner.
2. Spread an even layer of sealant on the cylinder liners in the area indicated in the diagram.
3. Install the liner in the engine block taking care to ensure that the shim-gasket stays in its seating.
4. Tighten the liners to the engine block using the clamps securing the head and tightening the screws to the correct torque.

- Clean the surfaces of the engine block of LOCKTITE and check that the cylinder liner protrusion is within the specified values.

After fitting the cylinder liners wait for 6 hours before starting the engine.
If the installation and tightening of the cylinder head is not carried out immediately, the load should be maintained on the cylinder liners for approx. 12 hours.

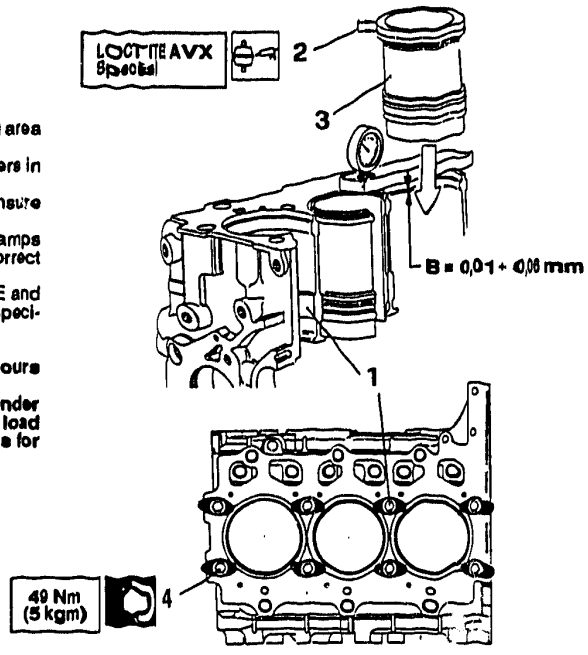

ENGINE UNIT RE-ASSEMBLY (continued)
PISTON - CONNECTING ROD ASSY

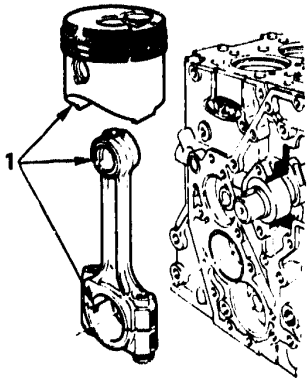

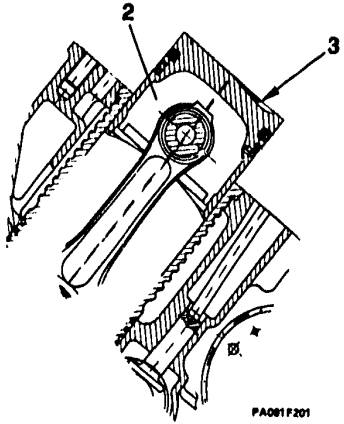

1. Lubricate the piston-connecting rod assy with engine oil.
2. Insert the piston-connecting rod assy by observing the cylinder reference order marked when disassembling.
3. Position the pistons with the combustion chamber facing towards the camshaft.

ENGINE UNIT RE-ASSEMBLY

PISTON-CONNECTING ROD ASSY (continued)

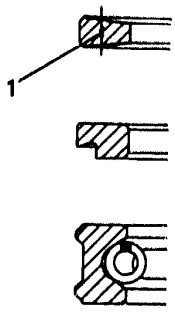

PA082F201

79.4 ÷ 84.3 Nm (8 ÷ 8.6 Kgm)	2
Lubricant MOLIGUARD LMP/180	

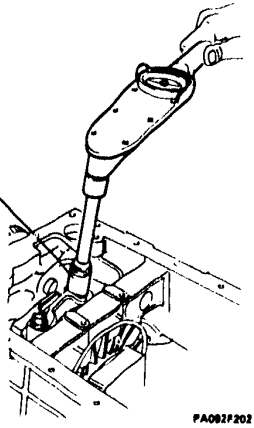

PA082F202

- Position the gaps of the piston rings and oil scraper ring staggered by 120°.

1. The upper piston ring gap must be positioned at the opposite side of the chamber machined in the piston crown.

- Rotate the engine on the stand by approx. 50° and position the pistons at the B.D.C.
- Fit the caps on the relevant connecting rods, paying attention to match the correct reference marks.

2. Lubricate the screws and tighten them to the prescribed torque.

ENGINE UNIT RE-ASSEMBLY (continued)

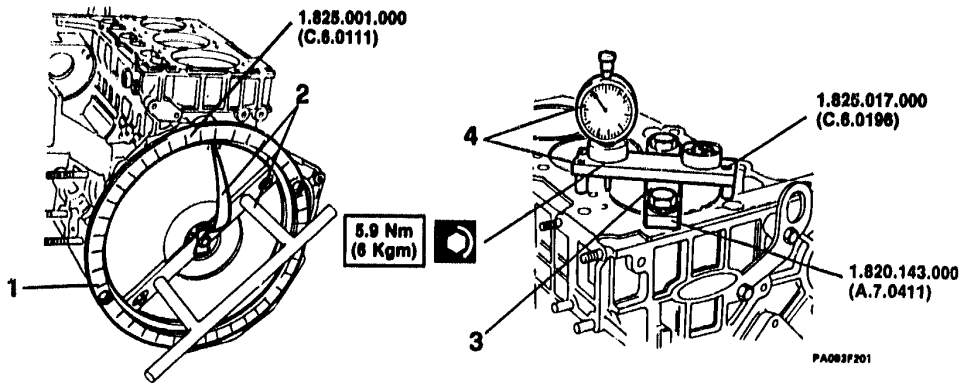

- Position the engine with the cylinder liners facing upwards.
1. Install goniometer No. 1.825.001.000 (C.6.0111) on the engine-gearbox coupling flange and tighten the fixing screws.
2. Fixx a suitable pointer on the tool for the crankshaft rotation.
3. Secure the support No. 1.820.143.000 (A.7.0411) to the cylinder block, in correspondance with the 1st cylinder, tightening the screws to the prescribed torque.

NOTE Remove the liner retainer of the 1st cylinder before securing the tool.

- Position the piston of the 1st cylinder to the T.D.C.
4. By means of the comparator installed on gauge No. 1.825.017.000 (C.6.0196) check the correct position of the piston and reset the goniometer pointer.

ENGINE UNIT RE-ASSEMBLY (continued)

CYLINDER HEAD GASKETS

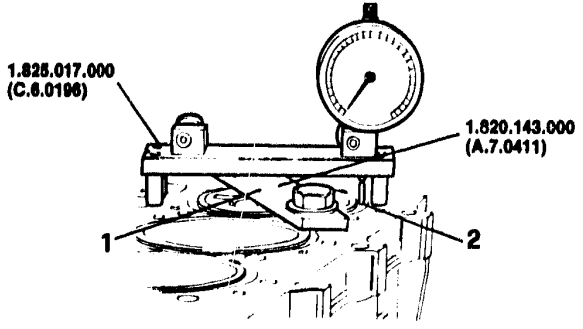

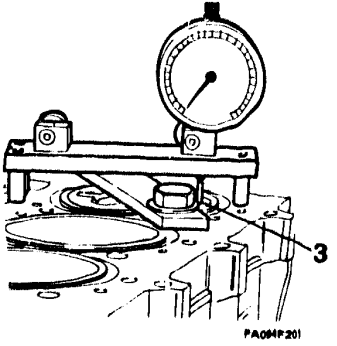

1. Keep the piston of the 1st cylinder at the T.D.C. with its liner blocked by the support No. 1.820.143.000 (A.7.0411).
2. Make use of gauge No. 1.825.017.000 (C.6.0196) and reset the comparator on the liiner outer edge.
3. Moove the gauge feeler onto the piston and determine the height difference.

ENGINE UNIT RE-ASSEMBLY

CYLINDER HEAD GASKETS (continued)

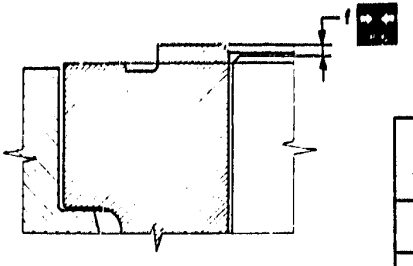

Cylinder head gasket thickness	Piston stand-out from liner outer edge (f) at T.D.C.	Identification
1.42	0.48 ÷ 0.57	0 - NOTCHES
1.52	0.58 ÷ 0.67	2 - NOTCHES
1.62	0.68 ÷ 0.77	1 - NOTCH

- Match each gasket to the relevant cylinder according to the (f) value.

ENGINE UNIT RE-ASSEMBLY (continued)
INTAKE AND EXHAUST MANIFOLDS

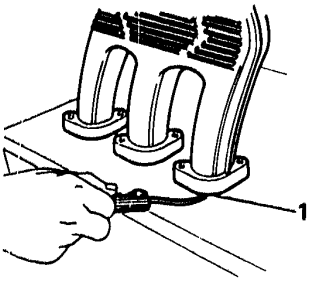

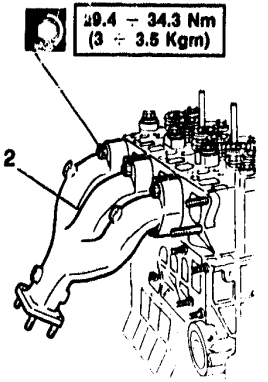

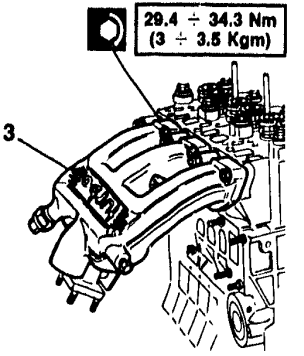

PA096F201

1. Check planarity of the manifold flanges and surface them if necessary.
- Install the cylinder heads with the relevant gaskets, insert the screws without tightening them.
2. Install the exhaust manifold with a new gasket by tightening the nuts to the prescribed torque.
3. Install the intake manifold with new gaskets and tighten the nuts to the prescribed torque.

ENGINE UNIT RE-ASSEMBLY (continued)

TIGHTENING CYLINDER HEADS

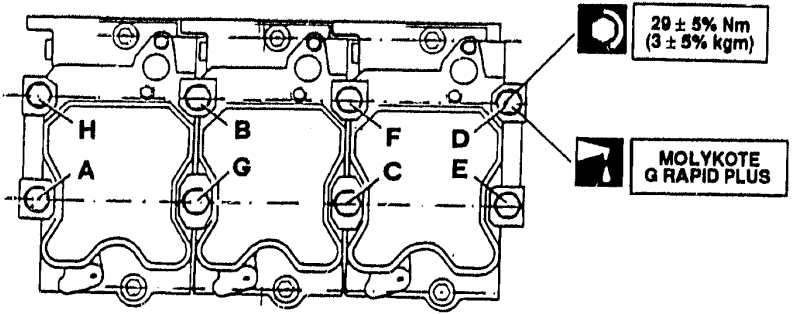

- Lubricate the thread of the screws in the cylinder head and resting surface of the screw heads with the specified oil.
- Draw together the inner screws A, B, C, D, E, F, G, H and in alphabetical order proceed as follows:
- Using a dynamometer spanner tighten the screws in alphabetical order to 29 ± 5% Nm (3 ± 5% kgm).
- using a dynamometer spanner check that all the screws are tightened to 29 ± 5% Nm (3 ± 5% kgm).

ENGINE UNIT RE-ASSEMBLY

TIGHTENING CYLINDER HEADS (continued)

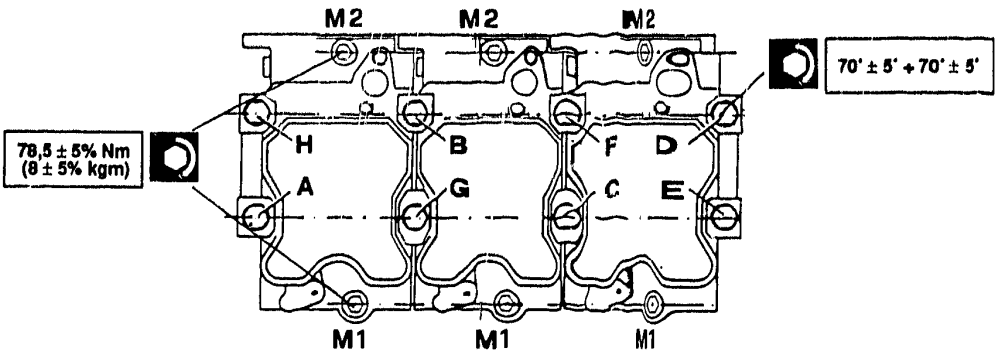

- using a socket spanner fitted with a goniometer tighten again with an angular rotation of 70° ± 5° in alphabetical order.
- Further tighten with a rotational angle of 70° ± 5° in alphabetical order.
- Lubricate the threads of the outer screws of the cylinder head and the relative resting base of the screw heads with engine oil.

- For the outer screws M1 tighten with a dynamometer spanner to 78,5 ± 5% Nm (8 ± 5% kgm); there is no particular tightening sequence applicable to this operation.
- Tighten the external screws M2 to the same value as the M1 screws.

ENGINE UNIT RE-ASSEMBLY

TIGHTENING CYLINDER HEADS (continued)

- When installation has been completed the engine must be run for ~ 20 minutes
- Switch off the engine and let it cool down.
- When the engine is cold, after removing the tappet cover, re- tighten as follows:
- For the inner screws (A, B, C, ...), in alphabetical order, fully loosen one screw at a time and re-tighten using a dynamometer spanner to 29,5 ± 5% Nm (3 ± 5% kgm) and then tighten further to a rotational angle of 120° ± 5°.
- Without loosening, tighten the outer screws M1 to a torque of 88 ± 5% Nm (9 ± 5% kgm) with a dynamometer spanner and then tighten the outer screws M2 to the same torque.

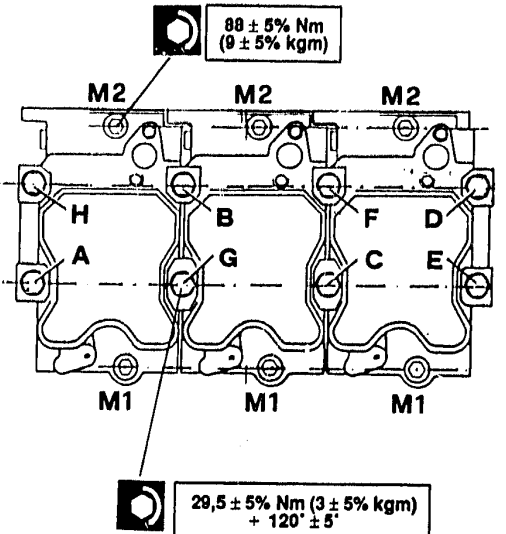

TURBODIESEL ENGINE

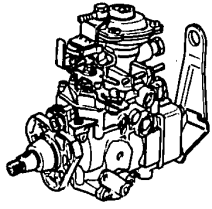

ENGINE UNIT RE-ASSEMBLY (continued)

ENGINE UNIT RE-ASSEMBLY

VACUUM PUMP ..... 01 - 104
OIL PUMP AND CAMSHAFT ..... 01 - 105
OIL SUMP ..... 01 - 106
COUNTERWEIGHT SHAFT ..... 01 - 107
TAPPET PUSH RODS AND ROCKER HOLDING BRACKETS ..... 01 - 109
INTAKE AND EXHAUST VALVE CLEARANCE ADJUSTMENT ..... 01 - 110
LUBRICATING PIPE OF ROCKER ARMS AND GLOW PLUGS ..... 01 - 111
INJECTION PUMP ..... 01 - 112
INJECTORS AND FUEL DELIVERY PIPES ..... 01 - 114
FRONT COVER AND CRANKSHAFT PULLEY ..... 01 - 115
TURBOSUPERCHARGER LUBRICATING UNION, OIL DIPSTICK AND CRANKING MOTOR ..... 01 - 116

ENGINE UNIT RE-ASSEMBLY (continued)

VACUUM PUMP

1. Insert the blades in the rotor.
2. Fit a new O-ring on the flange.
3. Insert the vacuum pump on its housing by matching the reference marks engraved on the two gears.
4. Tighten the vacuum pump screws to the prescribed torque.

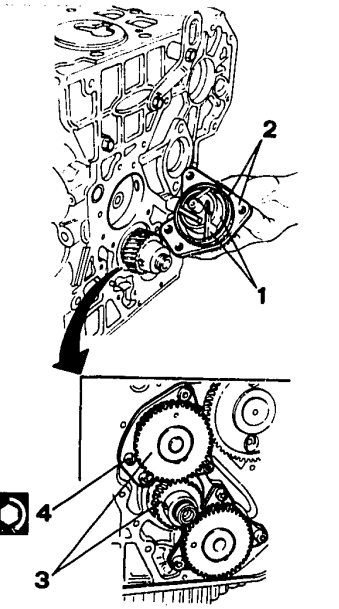

PA098F201

ENGINE UNIT RE-ASSEMBLY (continued)

OIL PUMP AND CAMSHAFT

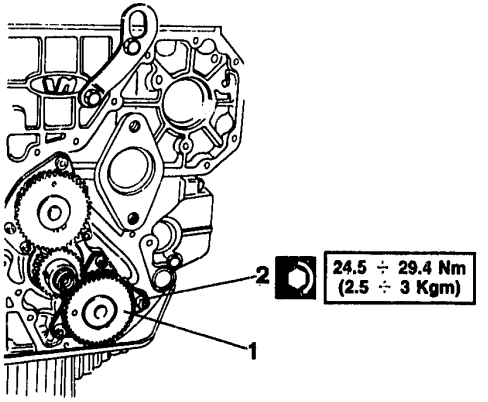

1. Fit a new gasket then install the oil pump without necessarily caring about the reference marks engraved on the gear.
2. Tighten the three fixing screws to the prescribed torque.

- Overturn the engine and insert the timing system tappets through the oil sump compartment.

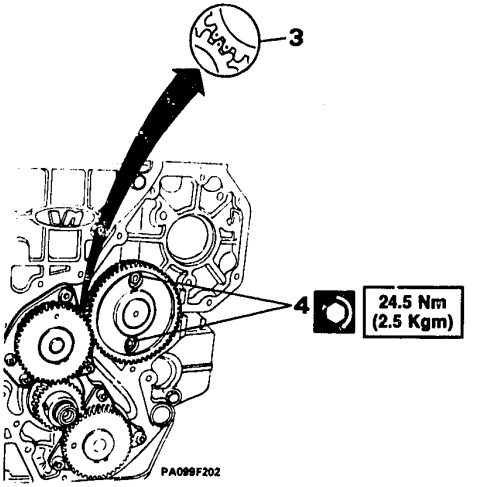

3. Lubricate the bushes and insert the camshaft, by matching the reference marks of the two gears.
4. Tighten the camshaft fixing screws to the prescribed torque.

ENGINE UNIT RE-ASSEMBLY (continued)

OIL SUMP

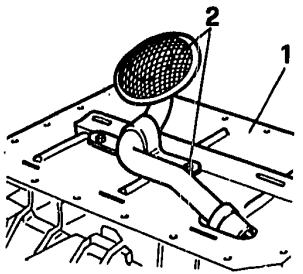

PA100F201

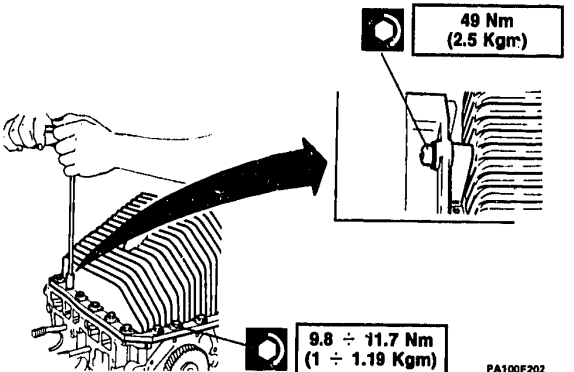

PA100F202

- Smear a thin layer of glue DOW CORNING Q3-7091 on the cylinder block surface and lean the anti-splash plate on the same surface.

1. Center the anti-splash plate.
2. Fit a new gasket on the suction rose piping. Insert the gasket into its seat and tighten the fixing screws.

- Smear a layer of glue DOW CORNING Q3-7091 on the oil sump edge and install the sump on the cylinder block.
- Insert all the fixing screws by starting with the two rear ones; tighten all the screws to the prescribed torque.

NOTE **One of the two rear screws must be removed when coupling the gearbox unit with the engine unit.**

ENGINE UNIT RE-ASSEMBLY (continued)

COUNTERWEIGHT SHAFT

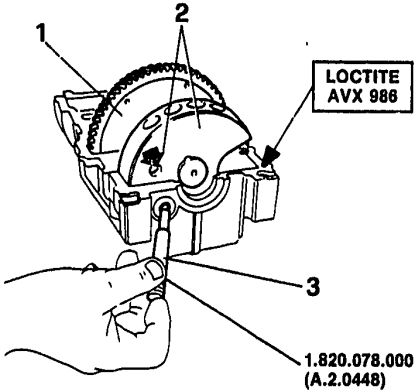

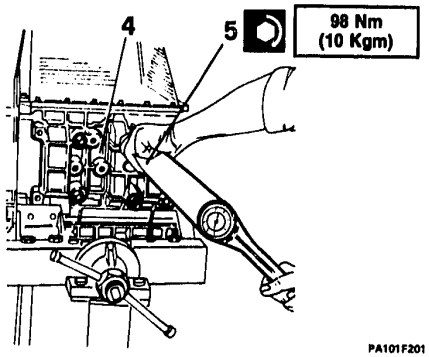

- Set the piston of the 1st cylinder to the T.D.C. in injection stroke.

1. Lubricate the shaft bearings with engine oil, then install it inside the crankcase.
2. Rotate the shaft till matching the hole machined on the counterweight mass with the one on the crankcase.
3. Check the alignment of the holes by inserting tool No. 1.820.078.000 (A.2.0448); let the tool insertedd in order to block th shaft in the stroke.
4. Install the crankcase on the cylinder block.
5. Tighten the crankcase fixing nuts to the prescribed torque.

ENGINE UNIT RE-ASSEMBLY

COUNTERWEIGHT SHAFT (continued)

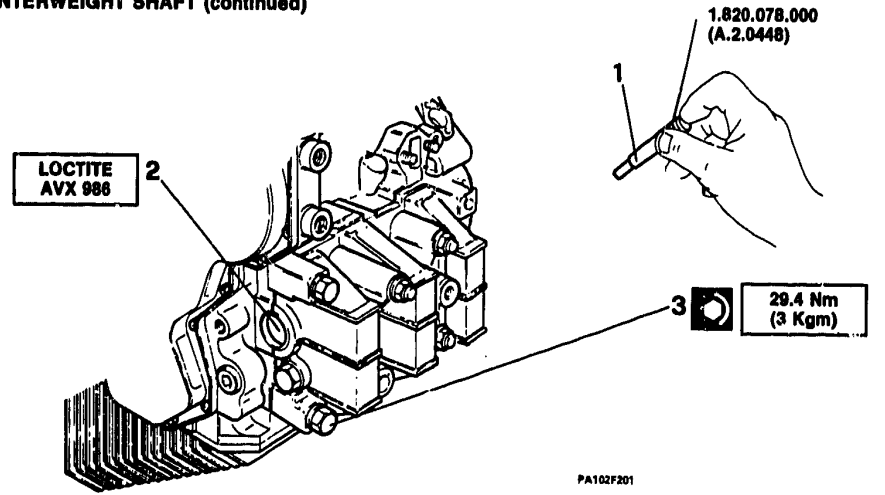

1. Remove the tool No. 1.820.078.000 (A.2.0448).
2. Install the two plugs and seal the relevant surfaces.
3. Insert and tighten the outer screws to the prescribed torque.

NOTE **After the crankcase installation, check the correct timing of the camshaft by rotating the crankshaft by 30°, thus settingthe 1st cylinder to the T.D.C.. In this position, check the insertion of tool No. 1.820.078.000 (A.2.0448) in the timing hole.**

ENGINE UNIT RE-ASSEMBLY (continued)

TAPPET PUSHRODS AND ROCKER HOLDING BRACKETS

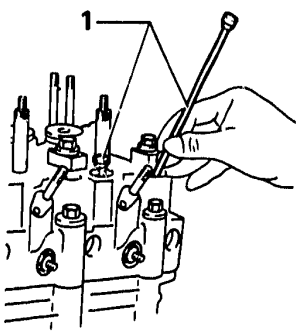

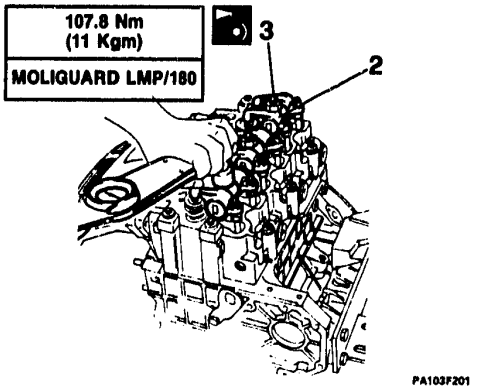

1. Insert the pushrods in the relevant seats.
2. Mount the rocker holding brackets by observing the coupling order with the cylinder heads marked at disassembly.
3. Lubricate and tighten the fixing nuts of the rocker holding brackets to the prescribed torque.

NOTE For rocker installation, position the camshaft cam, corresponding to the cylinder on which the rocker shall be installed, in its rest radius.

ENGINE UNIT RE-ASSEMBLY (continued)

INTAKE AND EXHAUST VALVE CLEARANCE ADJUSTMENT

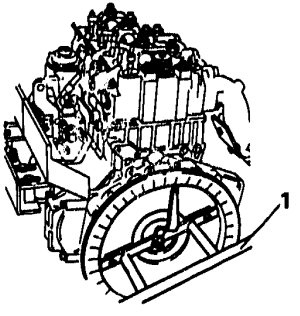

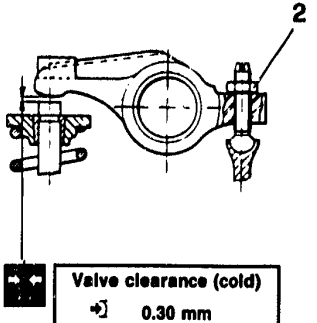

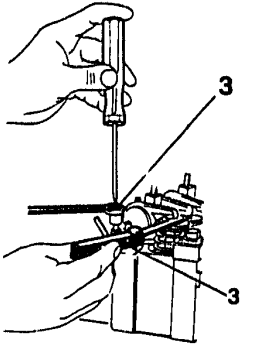

PB106F201

PA104F201

1. Rotate the crankshaft till positioning the cylinder No. 1 in the injection stroke.
2. Adjust the valve clearance of the cylinder No. 1 by slackening the nut of the adjusting screw.
3. Adjust the screw by inserting a feeler gauge of suitable thickness between tappets and the valve.
   - Tighten the nut of the adjusting screw and check the clearance.
   - By adopting the same procedure, check the valve clearance of the other cylinder valves.

ENGINE UNIT RE-ASSEMBLY (continued)

LUBRICATING PIPE OF ROCKER ARMS AND GLOW PLUGS

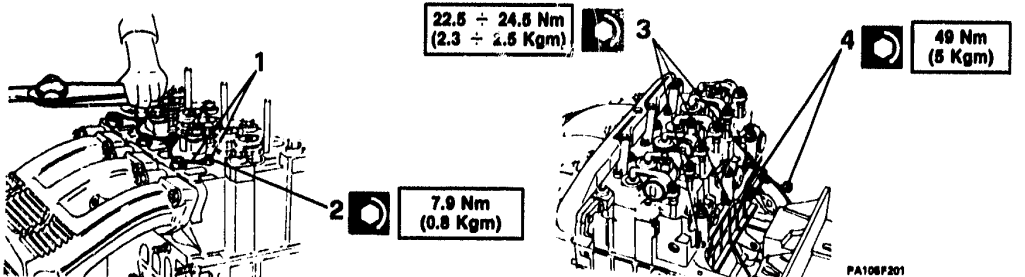

1. Refit the rocker arm lubrication hose and insert a new copper washer on each connection.
2. Tighten the pipe unions to the prescribed torque.
3. Insert the preheating glow-plugs in their seats and tighten them to the correct torque.
4. Fit the conducting plates and tighten the fixing nuts to the prescribed torque.

ENGINE UNIT RE-ASSEMBLY (continued)

INJECTION PUMP

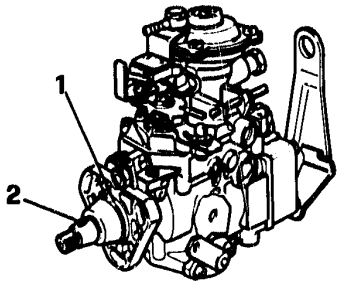

PA106F201

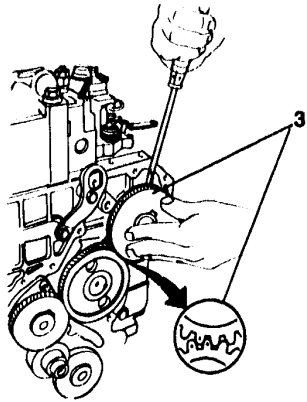

PA106F202

1. Replace the sealing ring.
2. Position the pump shaft so that the key will point towards the cylinder No. 1 delivery.
   - Position the cylinder No. 1 at the T.D.C. in injection stroke, then rotate the crankshaft in the operation opposite direction by 30°.
   - Install the injection pump by screwing down the fixing nuts without tightening them.
3. Install the drive gear by matching the reference marks engraved on the teeth.

NOTE **As the engine has an advance of 30° the marks on the teeth do not match up.**

ENGINE UNIT RE-ASSEMBLY

INJECTION PUMP (continued)

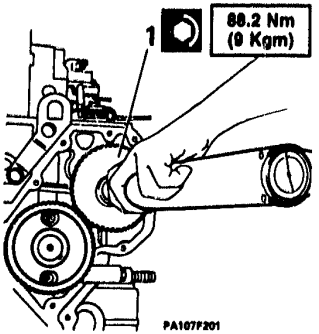

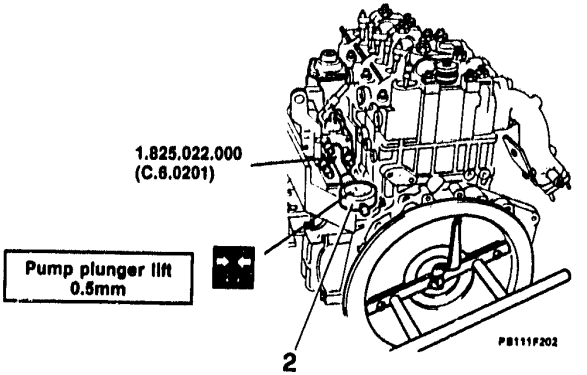

1. Secure the gear by tightening the nut to the prescribed torque.
2. Remove the plug and the gasket placed in the middle of the delivery unions and fit tool No. 1.825.022.000 (C.6.0201) provided with a comparator.

- Rotate by 30°, in the advance direction, the crankshaft so as to release the pump plunger and reset the comparator.
- Rotate in a C.C.W. direction till 8° before the T.D.C. of the cylinder No. 1 and check that the comparator detectsthe correct plunger lift.
- Rotate the pump till obtaining a correct reading, then tighten the fixing nuts to the prescribed torque.

29.4 ÷ 31.3 Nm (3 ÷ 3.2 Kgm)

- At the T.D.C., check that the overal stroke corresponds to 1.00 ÷ 1.03 mm.
- Remove the tool and the comparator and refit plug and gasket.

ENGINE UNIT RE-ASSEMBLY (continued)

INJECTORS AND FUEL DELIVERY PIPES

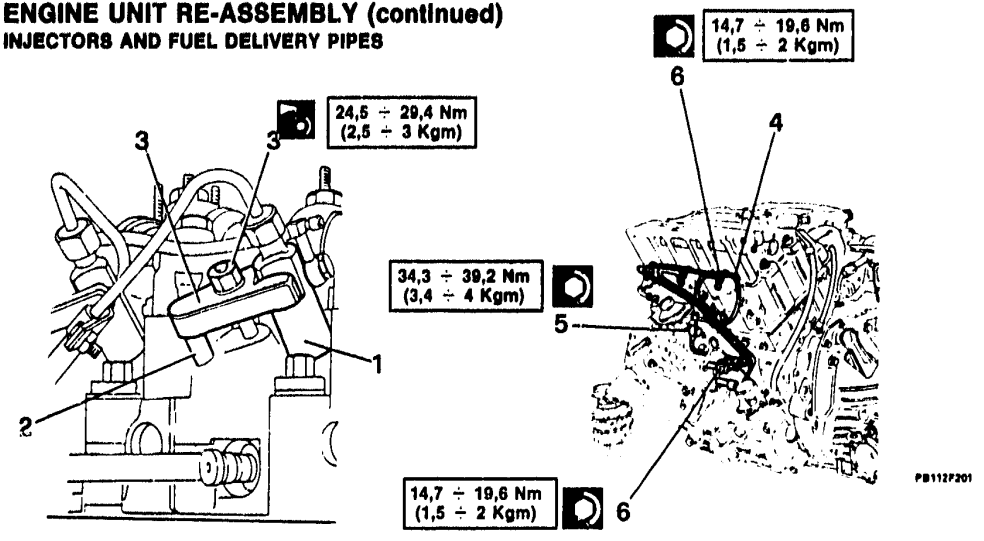

1. Insert the injectors complete with new gaskets.
2. Position the pawls.
3. Install the brackets and tighten the nuts to the prescribed torque.
4. Refit the fuel recycling pipe.
5. Reconnect the hose carrying diesel fuel to the injection pump and tighten the connection to the correct torque.
6. Connect the fuel delivery pipes to the relevant unions and tighten to the prescribed torque.

In case of replacement of fuel delivery pipes, when re-assembling, it is recommended to position them as shown in figure.

ENGINE UNIT RE-ASSEMBLY (continued)

FRONT COVER AND CRANKSHAFT PULLEY

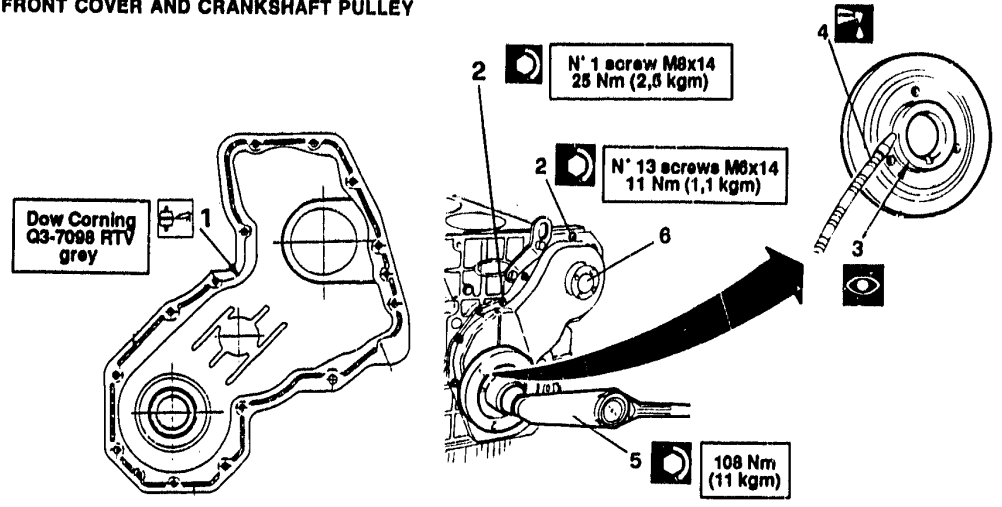

1. Run silicone sealant of the specified type to a thickness of 3 - 6 mm around the perimeter of the cover as shown by the dotted line in the illustration.
2. Fit the cover and tighten the screws to the correct torque.
3. Check the working surfaces of the oil seal on the engine pulley for damage.
4. Lubricate and install the pulley.
5. Apply LOCTITE 222 to the thread and tighten the nut to the correct torque.
6. Insert a new gasket, fit the cap and tighten it using tool N° 1.821.216.000.

- Wait for at least 4 hours before starting the engine.

ENGINE UNIT RE-ASSEMBLY (continued)

TURBOSUPERCHARGER LUBRICATING UNION. OIL DIPSTICK AND CRANKING MOTOR

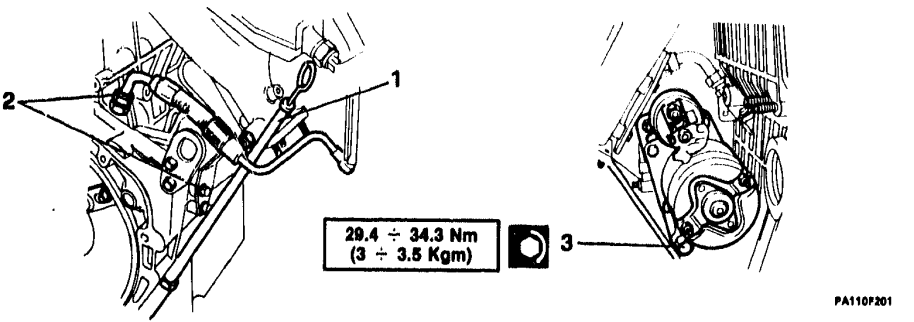

1. Refit the oil dipstick along with the relevant gasket.
2. Refit the oil-to turbosupercharger delivery pipe by tightening the union and fixing the bracket.
3. Refit the cranking motor by tightening the three screws to the prescribed torque.

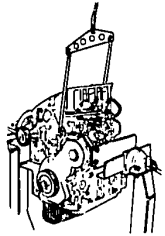

TURBODIESEL ENGINE

ENGINE UNIT RE-ASSEMBLY (continued)

ENGINE UNIT RE-ASSEMBLY

COOLING CIRCUIT MANIFOLD AND
WATER/OIL HEAT EXCHANGER ..... 01 - 117
WATER PUMP, THERMOSTAT
UNIT AND LDA PIPING..... 01 - 118
TAPPET COVER AND OIL RETURN
PIPING FROM TURBOSUPERCHARGER..... 01 - 119

ENGINE UNIT RE-ASSEMBLY (continued)

COOLING CIRCUIT MANIFOLD AND WATER/OIL HEAT EXCHANGER

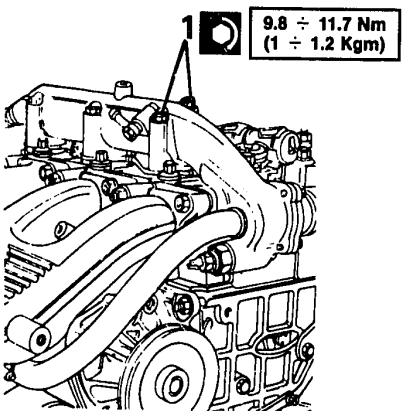

PA111F201

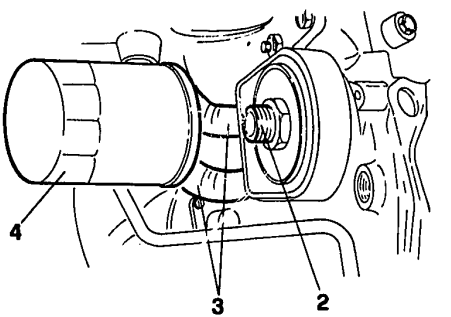

PA111F201

1. Fit a new gasket, refit the manifold and tighten the fixing screws to the prescribed torque.
2. Install the heat exchanger and fit a new oil seal ring, by securing the unit with the union for the oil filter.
3. Connect the two sleeves.
4. Install a new oil filter, lubricate its gasket and hand tighten.

ENGINE UNIT RE-ASSEMBLY (continued)

WATER PUMP, THERMOSTAT UNIT AND LDA PIPING

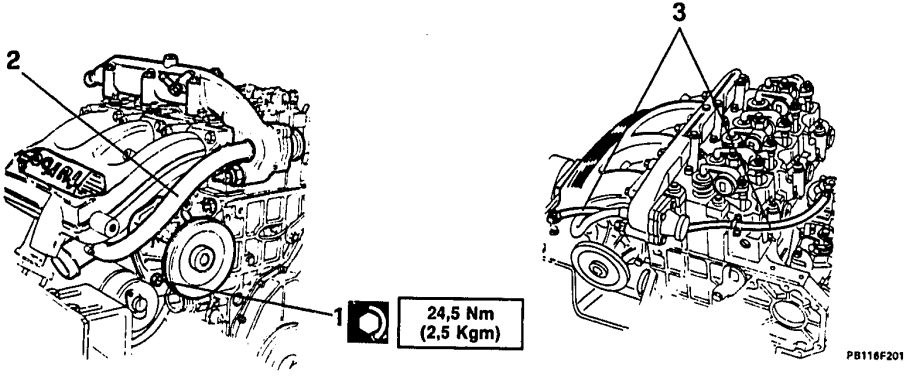

1. Refit the water pump and tighten the four nuts to the correct torque.
2. Connect the hose to the manifold and to the thermostat by fixing it with the clamps.
3. Refit the LDA hose securing the clamp to the head and the connections on the injection pump and intake manifold.

ENGINE REASSEMBLY (Continued)

TAPPET COVER AND OIL RETURN PIPING FROM TURBOSUPERCHARGER

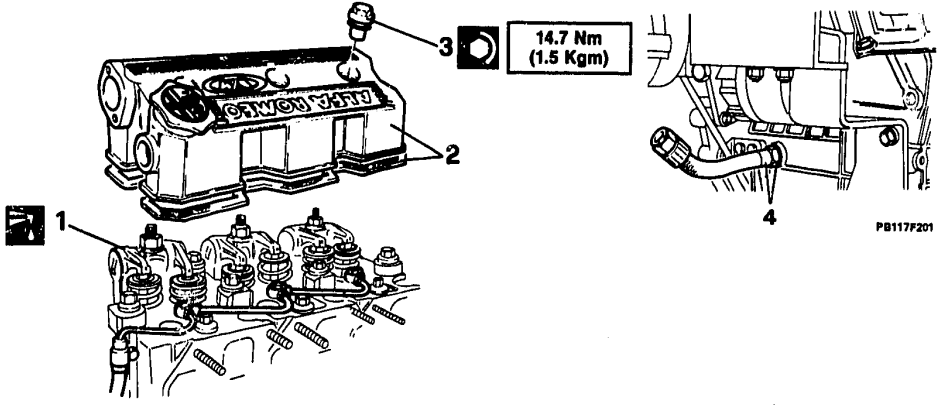

1. Oil the rocker arms and timing drive components.
2. Mount a new gasket on the tappet cover.
3. Mount the cover on the cylinder heads, tightening the three nuts to the specified torque.
4. Refit the hose carrying oil away from the turbocharger, fit a new copper washer and tighten the connection onto the engine block.

ENGINE UNIT RE-ASSEMBLY (continued)

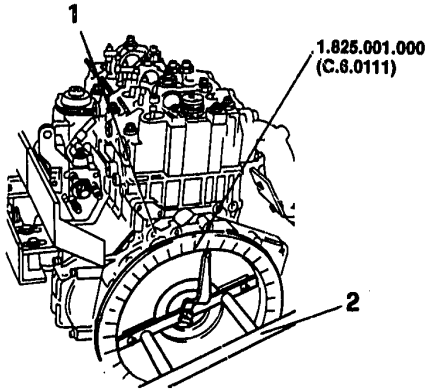

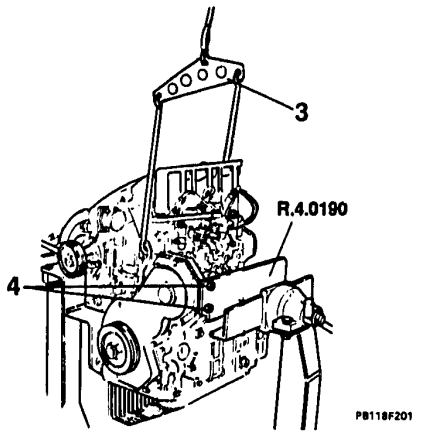

1. Remove goniometer No. 1.825.001.000 (C.6.0111) from the flange.
2. Remove from the flywheel the tool for the crankshaft rotation.
3. Hook the engine to a suitable sling by means of the anchoring brackets and keep it slightly lifted by using a crane.
4. Unscrew and remove the fixing bolts of the supporting brackets R.4.0190 on the overhaul stand.

ENGINE UNIT RE-ASSEMBLY (continued)

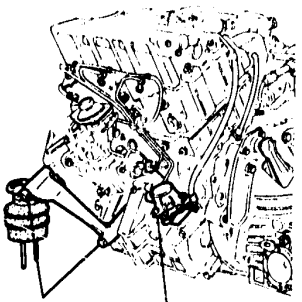

44.5 ÷ 55 Nm (4.5 ÷ 5.5 Kgm)

88.7 ÷ 98 Nm (9 ÷ 10 Kgm)

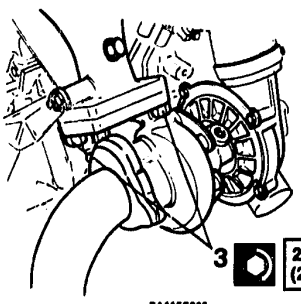

24.5 ÷ 27.4 Nm (2.5 ÷ 2.8 Kgm)

- Lift the engine and lean it on the work bench, without unhooking the sling.
- Remove the brackets from the cylinder block.

1. Assemble the left-side support by tightening the screws to the prescribed torque.
2. Refit the fuel pump by tightening the fixing nuts to the prescribed torque.
3. Re-install the turbosupercharger unit by inserting a new gasket and tightening the four self-locking nuts to the prescribed torque.

ENGINE UNIT RE-ASSEMBLY (continued)

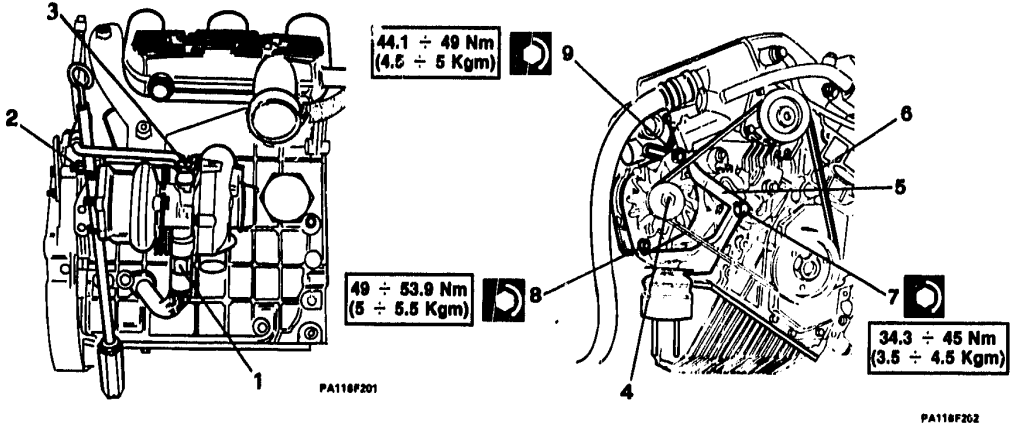

1. Re-connect the oil return hose to the turbocharger and tighten the connection.
2. Refit the bracket of the oildipstick, by tightening the nut.
3. Pour a small amount of oil in the turbosupercharger through the inlet hole, then secure the oil delivery piping on the same hole.
4. Refit the alternator.
5. Mount the right-side support.
6. Fit and adjust the belt (see **GR. 00**).
7. Tighten the right-side support screw to the prescribed torque.
8. Tighten the alternator fixing bolt to the prescribed torque.
9. Tighten the belt tension adjusting bolt to the prescribed torque.

- Join the gearbox to the engine unit.
- Unite the gearbox and engine (see "ENGINE DISASSEMBLY AND ASSEMBLY FROM THE GEARBOX/DIFFERENTIAL UNIT").

TURBODIESEL ENGINE

TSN

TECHNICAL SPECIFICATIONS AND NOTES

TECHNICAL SPECIFICATIONS AND NOTES

ENGINE TECHNICAL DATA ..... 01 - 123
ENGINE BLOCK AND MAIN BEARINGS ..... 01 - 124
CRANKSHAFT ..... 01 - 125
FLYWHEEL ..... 01 - 126
OIL PUMP ..... 01 - 127
OIL PRESSURE RELIEF VALVE SPRING ..... 01 - 127
CYLINDER LINERS ..... 01 - 128
CAMSHAFT ..... 01 - 129
TAPPETS AND ROCKER ARMS ..... 01 - 129
PISTONS (WITH INSERT) ..... 01 - 130
PISTON PINS AND PISTON RINGS ..... 01 - 131
CONN. RODS AND BEARINGS ..... 01 - 132
CYLINDER HEADS ..... 01 - 133
VALVES AND SPRINGS ..... 01 - 134
COUNTERWEIGHT SHAFT ..... 01 - 135

TECHNICAL SPECIFICATIONS AND NOTES

ENGINE TECHNICAL DATA

FEATURES		VM96A
Cycle		Diesel. 4-stroke comet IV pre-combustion chamber
Number of cylinders and arrangement		3 in line
Fuel supply		indirect injection
Bore - stroke Displacement	mm cm³	92 × 89.2 1779
Combustion chamber volume	cm³	23.2 ÷ 24.3
Compression ratio		22:1
Maximum power DIN	kW (CV)	62 (84) at 4200 r.p.m.
Maximum torque DIN	Nm (Kgm)	178 (18.2) at 2400 r.p.m.

ENGINE BLOCK AND MAIN BEARINGS

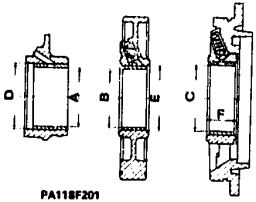

PA118F201

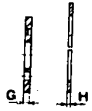

PA118F202

Unit of measure: mm

INSPECTION DATA			ENGINE VM96A
Front main bearing housing bore "D" in engine block			67.025 ÷ 67.050
Front main bearing inner diameter "A" in engine block	Standard		63.056 ÷ 63.110
	Undersize	1st	62.810 ÷ 62.860
		2nd	62.560 ÷ 62.610
Intermediate main bearing housing diameter "E" in split rings (1)			66.670 ÷ 66.687
Intermediate main bearing inner diameter "B" in split rings (2)	Standard		63.050 ÷ 63.093
	Undersize	1st	62.800 ÷ 62.843
		2nd	62.550 ÷ 62.593
Rear main bearing inner diameter "C" in split ring	Standard		70.060 ÷ 70.085
	Undersize	1st	69.800 ÷ 69.825
		2nd	69.550 ÷ 69.575
Rear main bearing shoulder distance "F"			33.060 ÷ 33.130
Crankshaft abutment flange thickness "g"			7.90 ÷ 8.10
Shim rings thickness "h"	Standard		2.311 ÷ 2.362
	Oversize	1st	2.411 ÷ 2.462
		2nd	2.511 ÷ 2.562

(1) For this measurement, fit retaining tool No. 1.820.143.000 (A.7.0411) and tighten the screws to 59 Nm (6 kgm)
(2) To be measured with main bearing split ring screws tightened to 39 ÷ 44 Nm (4 ÷ 4.5 kgm)

CRANKSHAFT

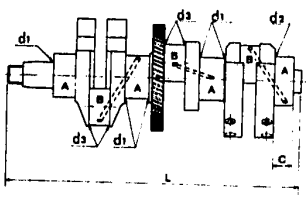

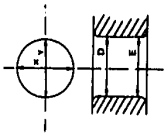

PA119F201

OVALITY X-Y

TAPER D E

Unit of measure: mm

INSPECTION DATA				ENGINE VM96A
Main journal diameter "A"	Front and intermediate	Standard	Front	62.995 ÷ 63.010
			Interm.	63.005 ÷ 63.020
		Undersize	1st	62.730 ÷ 62.750
			2nd	62.480 ÷ 62.500
	Rear	Standard		69.985 ÷ 70.000
		Undersize	1st	69.730 ÷ 69.750
			2nd	69.480 ÷ 69.500
Crankpin diameter "B"		Standard		53.940 ÷ 53.995
		Undersize	1st	53.670 ÷ 53.690
			2nd	53.420 ÷ 53.440
Rear main journal length "C"				27.975 ÷ 28.025
Fillet radius	Front and intermediate main journals		"d1"	2.7 ÷ 3
	Rear main journals		"d2"	2.7 ÷ 3
	Crankpins		"d3"	2.7 ÷ 3
Main journal and crankpin surface roughness			µm	0.12
Max. main journal and crankpin ovality at wear limit				0.010
Max. main journal and crankpin taper at wear limit				0.10
Max. main journal eccentricity				0.03
Final dimension			"L"	430.5

NOTE: Renitride crankshaft after grinding

FLYWHEEL

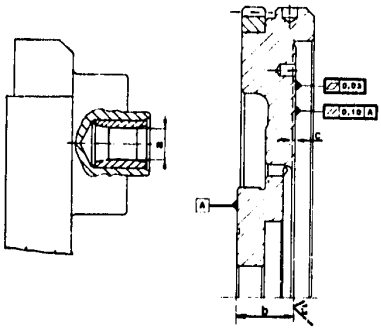

PA120F201

Unit: mm

INSPECTION DATA		ENGINE VM96A
Crankshaft rear bush diameter	"a"	16.065 ÷ 16.080
Nominal dimension between driven disc contact face and flywheel-to-crankshaft mounting face	"b"	$29\ ^{0}_{-0.10}$
Max. removal of material	"c"	1
Max. misalignement between driven disc contact face and flywheel-to-crankshaft mounting face		0.10
Max. planarity erroe of driven disc contact face		0.03
Surface roughness of driven disc contact face	µm	1.2

OIL PUMP

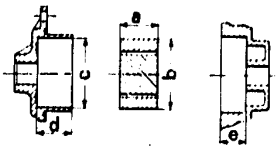

PA121F201

Unit: mm

INSPECTION DATA	ENGINE VM96A
Oil pump rotor height "a"	24.887 ÷ 25.000
Oil pump outer rotor outer diameter "b"	57.950 ÷ 58.000
Rotor housing bore "c" in pump body	58.130 ÷ 58.180
Rotor housing depth "d" in pump body	28.030 ÷ 28.060
Oil pump housing depth "e" in cylinder block	18.000 ÷ 18.025
Rotor stand-out from housing on pump body	0.030 ÷ 0.073

OIL PRESSURE RELIEF VALVE SPRING

INSPECTION DATA		ENGINE VM96A
Unloaded spring length	mm	57.5
Spring length with closed valve	mm	46
Corresponding load	N (kg)	131 (13.36)
Spring length with a 3 mm opened valve	mm	40.5
Corresponding load	N (kg)	193.5 (19.72)
Spring length at valve opening start	mm	43.5
Corresponding load	N (kg)	159.3 (16.24)

CYLINDER LINERS

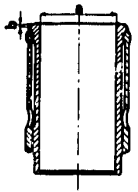

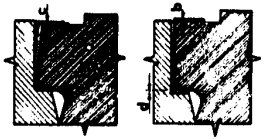

PA122F201

Unit: mm

INSPECTION DATA		ENGINE VM96A
Cylinder liner diameter "a"	Class A	92.000 ÷ 92.010
Cylinder liner outer edge stand-out from cylinder block (1) "c"		0.11 ÷ 0.23
Cylinder head outer edge stand-out from cylinder block (1) "b"		0.00 ÷ 0.05
Max. cylinder liner ovalization and taper (at wear limit)		0.010
Cylinder liner inner surface roughness (new)		0.8 ÷ 1.2

(1) For the measurement, install the cylinder liner retainer N. 1.820.1No. 1.820.143.000 (A.7.0411) and tighten the screws to 59 Nm (6 kgm)

DETERMINATION OF GASKET THICKNESS BETWEEN LINER AND CYLINDER BLOCK

Unit: mm

CYLINDER LINER OUTER EDGE STAND-IN FROM CYLINDER BLOCK "C"	ENGINE VM96A
	Gasket thickness "d"
0.11 ÷ 0.14	0.15
0.15 ÷ 0.20	0.20
0.21 ÷ 0.23	0.23

CAMSHAFT

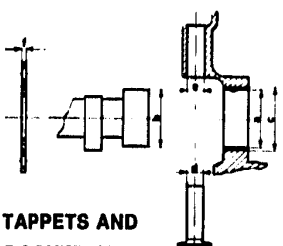

PA123F201

TAPPETS AND ROCKER ARMS

Unit: mm

INSPECTION DATA	ENGINE VM96A
Camshaft bearing bore diameter "a"	53.540 ÷ 53.590
Camshaft journal diameter "b"	53.480 ÷ 53.500
Camshaft bearing housing diameter "c"	57.005 ÷ 57.030
Tappet outer diameter "d"	14.965 ÷ 14.985
Tappet housing diameter in cylinder block "e"	15.010 ÷ 15.035
Camshaft flange thickness "f"	3.950 ÷ 4.050

Unit: mm

INSPECTION DATA	ENGINE VM96A
Rocker shaft diameter "g"	21.979 ÷ 22.000
Rocker bush bore diameter "h"	22.020 ÷ 22.041
Rocker bush housing bore diameter "i"	25.000 ÷ 25.033

PISTONS (with insert)

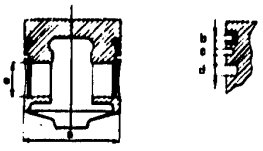

Unit: mm

INSPECTION DATA		ENGINE VM96A
Piston diameter (1) "a"	Class A	91.965 ÷ 91.975
First piston ring seat height "b"		2.175 ÷ 2.205
Second piston ring seat height "c"		2.060 ÷ 2.080
Oil scraper ring seat height "d"		4.020 ÷ 4.040
Piston pin hole diameter "e"		30.002 ÷ 30.007
Piston skirt maximum wear		0.050
Piston pin hole max. ovalization (at maximum wear)		0.050
Weight difference between pistons		≤0.08 N (8 g)

(1) To be measured at right angles as to the piston pin axis, at 19.75 mm from the skirt lower edge.
(2) For the measurement, install cylinder liner retainer No. 1.820.143.000 (A.7.0411) and tighten the screws to 59 Nm (6 Kgm)

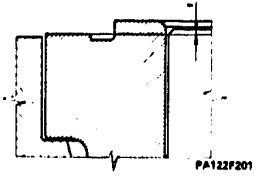

MEASUREMENT OF CYLINDER HEAD GASKET THICKNESS

Unit: mm

Cylinder head gasket thickness	Piston stand-out at its T.D.C. from cylinder liner outer edge (f)	Identification (notches or holes)
1.420	0.480 ÷ 0.570	0
1.520	0.580 ÷ 0.670	2
1.620	0.680 ÷ 0.770	1

PISTON PINS AND PISTON RINGS

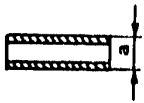

PA126F201

Unit: mm

INSPECTION DATA	ENGINE VM96A
Piston pin diameter "a"	29,990 ÷ 29,996

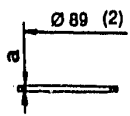

PB129F203

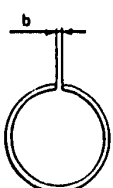

PB129F202

Unit: mm

INSPECTION DATA		ENGINE VM96A
Piston ring thickness "a"	First piston ring (2)	2.075 ÷ 2.095
	Second piston ring	1.978 ÷ 1.990
	Oil scraper ring	3.978 ÷ 3.990
Ring gap (1) "b"	First piston ring	0.40 ÷ 0.65
	Second piston ring	0.25 ÷ 0.45
	Oil scraper ring	0.25 ÷ 0.58

(1) To be measured in the check ring nut or inside the cylinder liner

(2) Value to measure at Ø 89 mm

CONNECTING RODS AND BEARINGS

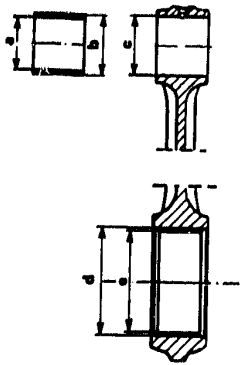

PA126P201

Unit: mm

INSPECTION DATA			ENGINE VM96A
Connecting rod small end bearing bore "a"			30.030 ÷ 30.045
Connecting rod small end bearing diameter "b"			34.089 ÷ 34.129
Connecting rod small end bearing seat diameter "c"			34.000 ÷ 34.025
Connecting rod big end bore diameter (1) "d"			57.563 ÷ 57.582
Connecting rod big end bearing bore (1) "e"	Standard		53.977 ÷ 54.016
	Undersize	1st	53.725 ÷ 53.764
		2nd	53.475 ÷ 53.514
Weight difference between connecting rods			⩽0.1 N (10 g)

(1) To be measured with connecting rod scres tightened to 79.4 ÷ 84.3 Nm (8 ÷ 8.6 kgm)

CYLINDER HEADS

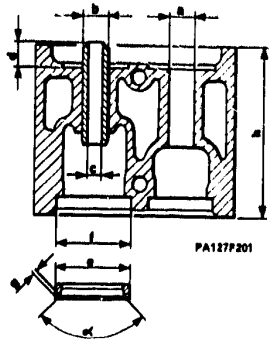

Unit: mm

INSPECTION DATA			ENGINE VM96A
Valve seat diameter "a"			13.992 ÷ 14.008
Valve guide outer diameter "b"			14.028 ÷ 14.039
Valve guide inner diameter (installed) "c"			8.000 ÷ 8.015
Valve guide stand-out "d"			13.5 ÷ 14
Valve seat outer diameter "e"	Standard	Intake	42.070 ÷ 42.086
		Exhaust	36.050 ÷ 36.066
	Oversize	Intake	42.370 ÷ 42.386
		Exhaust	36.350 ÷ 36.366
Valve seat housing diameter "f"	Standard	Intake	41.962 ÷ 41.985
		Exhaust	35.964 ÷ 35.988
	Oversize	Intake	42.262 ÷ 42.285
		Exhaust	36.264 ÷ 36.288
Valve seat taper (1) "α"		Intake	55°
		Exhaust	45°
Valve seat beat length (1) "g"		Intake	1.50
		Exhaust	1.80
Cylinder head height "h"			89.95 ÷ 90.05

(1) With valve seat installed

VALVES AND SPRINGS



Unit: mm

INSPECTION DATA		ENGINE VM96A
Valve stem diameter "a"	Intake	7.940 ÷ 7.960
	Exhaust	7.920 ÷ 7.940
Valve head diameter "b"	Intake	40.05 ÷ 40.25
	Exhaust	33.80 ÷ 34.00
Valve head embedding "c"	Intake	0.80 ÷ 1.20
	Exhaust	0.99 ÷ 1.19

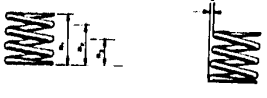

PA128F201

INSPECTION DATA		ENGINE VM96A
Valve spring length with unloaded spring "n1"	mm	44.65
Valve spring length with closed valve "n2"	mm	38.6
Load corresponding to length "n2"	N (kg)	324 ÷ 343 (33 ÷ 35)
Valve spring length with opened valve "n3"	mm	28.2
Load corresponding to length "n3"	N (kg)	883 ÷ 932 (90 ÷ 95)
Out-of-square maximum error with unloaded valve spring "e"	mm	1.2

COUNTERWEIGHT SHAFT

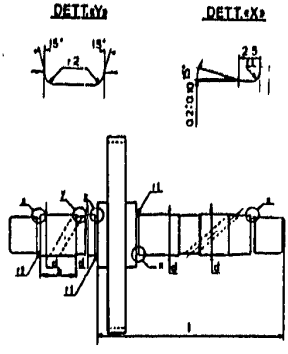

Unit: mm

INSPECTION DATA			ENGINE VM96A
Main journal diameter "d"	Standard		31.92 ÷ 31.94
	Undersize	1st	–
		2nd	–
Taper on diameter along portion "a"			0.0175 ÷ 0.0225
Fillet radii	Main journals (r1)		1
	Lubrication groove (r2)		1
Main journal roughness		µm	0.2
Crown gear excentricity		µm	0.04
Distance between reference plane and crown gear rear shoulder (1)			155.45 ÷ 155.55
Crown gear shoulder roughness			0.2

NOTE After crankshaft grinding, it is necessary to restore the SUR-SULF treatement.

TURBODIESEL ENGINE

TSN

TECHNICAL SPECIFICATIONS AND NOTES (continued)

SPECIAL TOOLS

TECHNICAL SPECIFICATIONS AND NOTES

CLEARANCES AND INTERFERENCE FITS..... 01 - 136
HEAT UP TEMPERATURES..... 01 - 138
CHECKS AND ADJUSTMENTS ..... 01 - 139
FLUIDS AND LUBRICANTS..... 01 - 140
ABRASIVES..... 01 - 140
SEALANTS AND FIXING AGENTS ..... 01 - 141
TIGHTENING TORQUES..... 01 - 142
ENGINE SPEED AND V-BELT TENSIONING..... 01 - 145
SPECIAL TOOLS..... 01 - 146

CLEARANCES AND INTERFERENCE FITS

Unit: mm

PART		ENGINE VM96A
Cylinder liner/piston clearance	New	0.025 ÷ 0.045
	At wear limit	0.5
Ring/groove end float	First piston ring	0.080 ÷ 0.130
	Second piston ring	0.070 ÷ 0.102
	Oil scraper ring	0.030 ÷ 0.062
Piston pin/piston bore clearance		0,006 ÷ 0,017
Piston pin/small end bush bore clearance	New	0.034 ÷ 0.055
	At wear limit	0.100
Side clearance between main journals and main bearings (new)	Rear main journal	0.060 ÷ 0.105
	Front main journal	0,050 ÷ 0,115
	Intermediate main journal	0.050 ÷ 0.113
Side clearance between crankpins and big end bearings	New	0.022 ÷ 0.076
	At wear limit	0.200
Crankshaft end float		0.121 ÷ 0.323
Big end end float		0.20 ÷ 0.40
Side clearance between camshaft journals and bearings	New	0.040 ÷ 0.110
	At wear limit	0.200

(CONTINUED)

CLEARANCES AND INTERFERENCE FITS (continued)

Unit: mm

ITEM		ENGINE
		VM96A
Side clearance between rocker bushing and shaft	New	0.020 ÷ 0.062
	Maximum wear	0.200
Side clearance between tappets and seat	New	0.025 ÷ 0.070
	Maximum wear	0.100
Side clearance between valve stem and guide	Intake	0.040 ÷ 0.075
	Exhaust	0.060 ÷ 0.085
Interference between valve seat and housing	Intake	0.085 ÷ 0.124
	Exhaust	0.062 ÷ 0.102
Interference between valve guide and valve		0.020 ÷ 0.047
Rotor stand-out from the oil pump seat		0.030 ÷ 0.073
Maximum side clearance between oil pump inner and outer rotor		0.070 ÷ 0.200
Clearance between seat and oil pump outer rotor	New	0.130 ÷ 0.185
	Maximum wear	0.50
End float between gear and oil pump body		0.05 ÷ 0.07

HEAT UP TEMPERATURES

Unit: °C

COMPONENT	ENGINE
	VM96A
Cylinder head temperature for valve seat installation	150
Cylinder head temperature for valve guide installation	80 ÷ 90
Camshaft drive pinion temperature for installation on crankshaft	180 ÷ 200
Drive gear temperature for installation on camshaft	180 ÷ 200
Flywheel temperature (for 20' max)	190 ÷ 210

CHECKS AND ADJUSTMENTS

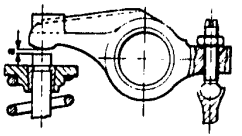

PA133F201

Unit: mm

TIMING DATA (1)

		ENGINE
		VM96A
Backlash "a"	Intake	0.30
	Exhaust	0.30
Rated cam lift	Intake	10,3
	Exhaust	11

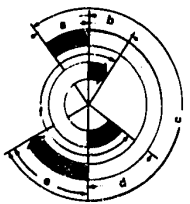

PA133F202

VALVE TIMING DIAGRAM (1)

(crankshaft clockwise rotation - front view)

				ENGINE
				VM96A
Actual diagram	Intake	Opens (before T.D.C.)	"a"	22° ±5°
		Closes (after B.D.C.)	"e"	48° ±5°
		Intake angular value	"c"	250°
	Exhaust	Opens (before B.D.C.)	"d"	60° ±5°
		Closes (after T.D.C.)	"b"	24° ±5°
		Exhaust angular value	"f"	264°
Check diagram	Intake	Check clearance	mm	1.2
		Opens (after T.D.C.)		3° ±2°
		Closes (after B.D.C.)		20° ±3°
	Exhaust	Check clearance	mm	1.65
		Opens (before B.D.C.)		26° ±3°
		Closes (before T.D.C.)		10° ±2°

(1) All the values are intended at cold engine

FLUIDS AND LUBRICANTS

APPLICATION	TYPE	DENOMINATION	Q.TY
Engine (sump and filter) for periodical replacement	OIL	AGIP SINT TURBODIESEL 10W/40	4,6 kg (5,25 l)
Engine (sump, filter, manifolds and distribution tanks)		IP SINTIAX TURBODIESEL 10W/40	5,1 kg (5,75 l)
Crankshaft oil seal rings (front and rear) – Outer surface	OIL	AGIP SINT TURBODIESEL 10W/40 IP SINTIAX TURBODIESEL 10W/40	–
– Sealing lip	GREASE	ISECO MOLYKOTE BR2	–
Threading – Cylinder head-to-cylinder block fixing screws – Connecting rod cap fixing screws – Rocker arm supporting bracket fixing nuts	Lubricant	MOLIGUARD LMP/180	–

ABRASIVES

APPLICATION	TYPE	DENOMINATION	Q.TY
Valves and seats grinding	ABRASIVE	SIPAL AREXONS Carbosilicon for valves	–

SEALANTS AND FIXING AGENTS

APPLICATION	TYPE	DENOMINATION	Q.TY
Oil sump gasket, cylinder block-side (1) Crankshaft pulley fixing nuts (1)	MASTIC	DOW CORNING Silastik 732 RTV	–
Counterweight shaft case (1) Upper contact band between liner and cylinder block (1)	MASTIC	LOCTITE AVX 986	–
Coupling surface between oil sump and cylinder block	MASTIC	LOCTITE 510	–
Mating surfaces on front cover and engine block	MASTIC	DOW CORNING Silastik Q3-7098 RTV grey	–

(1) Before the application, completely remove all traces of old compound and degrease the surfaces by means of trichloroethylene or trichloroethane

TIGHTENING TORQUES

Unit: Nm (kgm)

ITEM	ENGINE
	VM96A
Screws securing front cover to engine block (M6x14)	11 (1,1)
Screws securing front cover to engine block (M8x14)	25 (2,5)
Nut securing crankshaft pulley, lubricated with engine oil	108 (11)
Oil filter support union	34,3 ÷ 39,2 (3,5 ÷ 4)
Plug for oil - to - filter delivery	34,3 ÷ 39,2 (3,5 ÷ 4)
Screws securing cylinder heads to engine block (with lubricant MOLIGUARD LMP/180)	

- Lubricate the threads of the cylinder head inner screws and relative resting surface of the screw heads using the specified oil.
- Draw together the inner screws A, B, C, D, E, F, G, H and, in alphabetical order, proceed as follows:
- tighten each screw in alphabetical order using a dynamometer spanner to 29 ± 5% Nm (3 ± 5% kgm).
- using the dynamometer spanner check that all the screws are tightened to 29 ± 5% Nm (3 ± 5% kgm).
- using a socket spanner fitted with a goniometer, further tighten with an angular rotation of 70° ± 5° in alphabetical order.
- further tighten to an angular rotation of 70° ± 5°, once again in alphabetical order.
- Lubricate the threads of the outer cylinder head screws and relative resting surface of the screw heads with engine oil.
- For the outer screws M1 tighten with a dynamometer spanner to 78.5 ± 5% Nm (8 ± 5% kgm); no particular tightening sequence is necessary for this operation.
- successively tighten the outer screws M2 to the same torque value as the M1 screws.
- When the engine has been fitted in the vehicle, it must be run for ~ 20 minutes.
- Switch off the engine and let it cool down.
- When the engine is cold remove the tappet cover and tighten as follows:
- For the inner screws (A, B, C, ...), in alphabetical order, fully loosen one screw at a time and retighten using a dynamometer spanner to 29.5 ± 5% Nm (3 ± 5% kgm) and then further tighten to a rotational angle of 120° ± 5°.
- Using a dynamometer spanner, and without loosening the screws, tighten the outer M1 screws to a torque of 88 ± 5% Nm (9 ± 5% kgm) and then tighten the M2 screws to the same torque.

TURBOCHARGER-SIDE

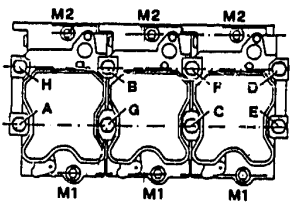

INJECTION PUMP-SIDE

TIGHTENING TORQUES (continued)

Unit: Nm (Kgm)

PART	ENGINE VM96A
Connecting rod cap fixing screws (with MOLIGUARD LMP/180 lubricant)	79.4 ÷ 84.3 (8 ÷ 8.6)
Crankshaft intermediate main journals fixing screws (in oil)	44.1 ÷ 49 (4.5 ÷ 5)
Engine-gearbox coupling flange screws and nuts (in oil)	49 (5)
Rear main journal fixing nuts	24.5 ÷ 29.4 (2.5 ÷ 3)
Engine flywheel fixing screws (in oil)	107.8 (11)
Vacuum pump fixing screws	24.5 ÷ 29.4 (2.5 ÷ 3)
Oil pump fixing screws (in oil)	24.5 ÷ 29.4 (2.5 ÷ 3)
Camshaft fixing screws	24.5 (2.5)
Oil sump fixing screws (M6)	9.8 ÷ 11.7 (1 ÷ 1.19)
Oil sump fixing screws (M10)	49 (5)
Counterweight shaft case fixing nuts	98 (10)
Counterweight shaft case outer screws	29.4 (3)
Rocker spring retainers fixing nuts (in oil)	107.8 (11)
Rocker lubrication piping unions	7.8 (0.8)
Glow plugs	22.5 ÷ 24.5 (2.3 ÷ 2.5)
Glow plugs conductor fixing nuts	49 (5)
Cooling circuit manifold fixing screws	9.8 ÷ 11.7 (1 ÷ 1.19)
Tappet cover fixing nuts	14.7 (1.5)

(CONTINUED)

TIGHTENING TORQUES (continued)

Unit: Nm (Kgm)

PART	ENGINE
	VM96A
Exhaust manifold fixing nuts	29.4 ÷ 34.3 (3 ÷ 3.5)
Intake manifold fixing nuts	29.4 ÷ 34.3 (3 ÷ 3.5)
Injection pump gear fixing nut	88.2 (9)
Injection pump fixing nuts	29.4 ÷ 31.3 (3 ÷ 3.2)
Injector fixing nuts (1)	24.5 ÷ 29.4 (2.5 ÷ 3)
Delivery unions to the injectors	14.7 ÷ 19.6 (1.5 ÷ 2)
Recycling pipe union	34.3 ÷ 39.2 (3.4 ÷ 4)
Fuel pump fixing nuts	88.7 ÷ 98 (9 ÷ 10)
Turbocharger fixing nuts	24.5 ÷ 27.4 (2.5 ÷ 2.8)

(1) With engine oil

ENGINE SPEED AND V-BELT TENSIONING

Unit: r.p.m.

INSPECTION DATA	ENGINE
	VM96A
Engine idle speed (1)	875 ÷ 925
Engine max. r.p.m. (empty)	4000

(1) To be determined at hot engine, gearbox in neutral, clutch engaged

TENSIONING	UNIT	ALTERNATOR WATER PUMP	POWER STEERING
At assembly	N	380 ÷ 430	380 ÷ 430
Minimum (cold after running-in)	N	380 ÷ 430	380 ÷ 430
Re-tensioning (cold)	N	300	300

SPECIAL TOOLS

1.820.002.000 (A.2.0070)	Rear axle support	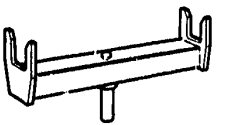 PA139F201
1.820.077.000 (A.2.0447)	Goniometer for cylinder head screw tightening	 PA139F202
1.820.078.000 (A.2.0448)	Retainer for engine flywheel	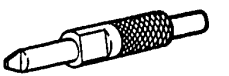 PA139F203
1.820.062.000 (A.2.0389)	Cylinder head fixing tool	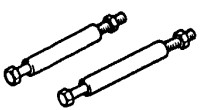 PA139F204

⇩

SPECIAL TOOLS (continued)

1.821.039.000 (A.3.0295)	Half-plates for camshaft gear removal	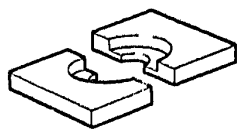 PA140F201
1.821.049.000 (A.3.0306)	Crankshaft gear extractor	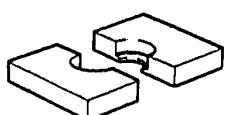 PA140F202
1.821.058.000 (A.3.0324)	Pulling/driving lever for cylinder head valves	 PA140F203
1.821.154.000 (A.3.0601)	Cylinder liner extractor	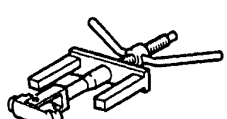 PA140F204

⇩

SPECIAL TOOLS (continued)

1.821.163.000 (A.3.0823)	Oil seal ring driver on rear main journal	 PA141F201
1.820.108.000 (A.4.0144)	Spindle for clutch disc centering	 PA141F202
1.821.216.000	Injection pump extractor	 PA141F203
1.822.037.000 (A.5.0275)	Wrench for cylinder head tightening	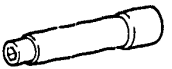 PA141F204

⇩

SPECIAL TOOLS (continued)

1.820.128.000 (A.7.0310)	Valve guide extractor	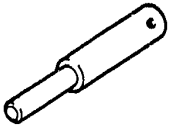 PA142F201
1.820.130.000 (A.7.0361)	Cage for inserting/extracting cylinder head valves	 PA142F202
1.820.131.000 (A.7.0375)	Spacer for valve guide insertion	 PA142F203
1.820.133.000 (A.7.0377)	Support for inserting/extracting valves	 PA142F204

⇩

SPECIAL TOOLS (continued)

1.820.134.000 (A.7.0378)	Cylinder head support	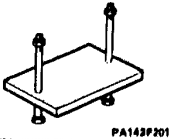 PA143F201
1.820.136.000 (A.7.0380)	Driver/puller of camshaft bushes from cylinder block	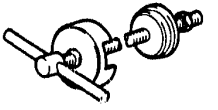 PA143F202
1.820.137.000 (A.7.0381)	Driver/puller of crankshaft front bearing	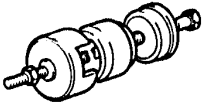 PA143F203
1.820.138.000 (A.7.0382)	Tool for crankshaft assembly/disassembly	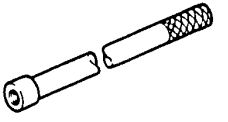 PA143F204

⇩

SPECIAL TOOLS (continued)

1.825.017.000 (C.6.0196)	Gauge for measuring clearance volume and liner stand-out	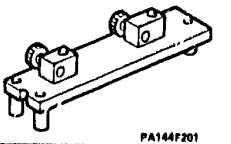 PA144F201
1.825.022.000 (C.6.0201)	Holder for injection pump timing (timing check on vehicle)	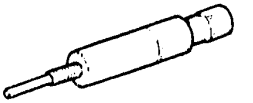 PA144F202
1.820.147.000 (R.4.0193)	Engine supporting plate	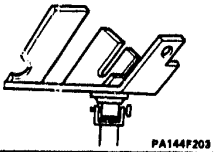 PA144F203
(R.4.0190)	Engine supporting brackets	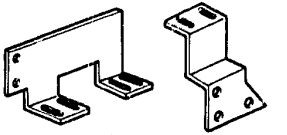 PA144F204

⇩

SPECIAL TOOLS (continued)

1.820.135.000 (A.7.0379)	Front pulley extractor	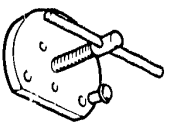 PA148F201
1.820.143.000 (A.7.0411)	Cylinder liner retaining support	 PA148F202
1.825.001.000 (C.6.0111)	Timing goniometer	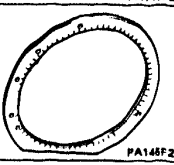 PA148F203

MICROFICHE INDEX

Microfiche 7/15 Groups: 04-05-07 - Twin carburettor engines - Electronic injection engines (LE3 - Jetronic)



Group 04 - Fuel supply system

TWIN CARBURETTOR ENGINE
FUEL SUPPLY SYSTEM, AIR FILTER, AIR MIXER ..... 04 - A
CARBURETTORS, ACCELERATOR CONTROL ADJUSTMENT ..... 04 - B
FUEL SUPPLY SYSTEM, EXHAUST SYSTEM ..... 04 - C
TDS, SPECIAL TOOLS ..... 04 - D
ELECTRONIC INJECTION ENGINES (LE3 - Jetronic)
INJECTION SYSTEM WIRING, AIR FILTER, AIR FLOW METER, ADDITIONAL AIR SOLENOID VALVE, THROTTLE VALVE BODY, SUPPLY MANIFOLD ..... 04 - E
FUEL SUPPLY CIRCUIT ..... 04 - F
FUEL VAPOUR EMISSION CONTROL SYSTEM, CHECKS AND ADJUSTMENTS ..... 04 - G
CHECKS AND ADJUSTMENTS (Continued), ELECTRIC/ELECTRONIC COMPONENTS ..... 04 - H
EXHAUST SYSTEM ..... 04 - I
TDS, SPECIAL TOOLS ..... 04 - L



Group 05 - Ignition, charging system

TWIN CARBURETTOR ENGINES
IGNITION, CHARGING SYSTEM, TDS ..... 05 - M
ELECTRONIC INJECTION ENGINES (LE3 - Jetronic)
IGNITION, CHARGING SYSTEM, TDS ..... 05 - N



Group 07 - Engine cooling system

TWIN CARBURETTOR ENGINE
COOLING SYSTEM, TDS ..... 07 - O
ELECTRONIC INJECTION ENGINES (LE3 - Jetronic)
COOLING SYSTEM, TDS ..... 07 - P

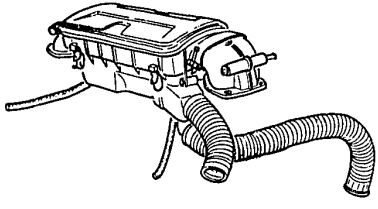

TWIN CARBURETOR ENGINE

FUEL SUPPLY SYSTEM

AIR FILTER

AIR MIXER

FUEL SUPPLY SYSTEM

DESCRIPTION ..... 04 - 1
IMPORTANT GENERAL INFORMATION ..... 04 - 2

AIR FILTER

ASSY ..... 04 - 3
REMOVAL - INSTALLATION ..... 04 - 4
DISASSEMBLY - ASSEMBLY ..... 04 - 5

AIR MIXER

DESCRIPTION ..... 04 - 6
CHECKS AND INSPECTIONS ..... 04 - 7
Hot air intake closing temperature ..... 04 - 7
Cold air intake closure temperature ..... 04 - 8
THERMOSTAT REPLACEMENT ..... 04 - 9

FUEL SUPPLY SYSTEM

DESCRIPTION

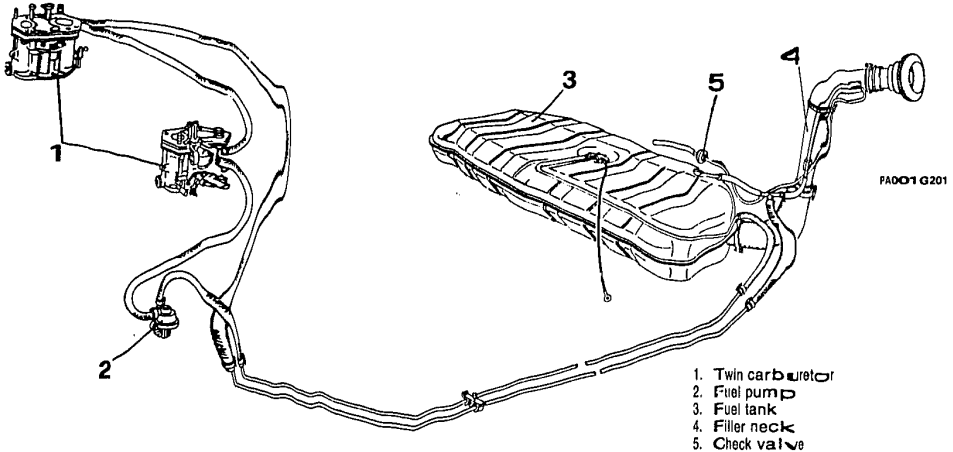

1. Twin carburetor
2. Fuel pump
3. Fuel tank
4. Filler neck
5. Check valve

- All versions are equipped with single suction carburetors.
- The fuel pump is driven by a cam on the oil pump drive shaft.
- For the engine correct operation, the use of "Prime grade" or "R.O.N. ≥ 95." unleaded petrol is recommended.

IMPORTANT GENERAL INFORMATION

- Never disconnect the battery when the engine is running or when the ignition key is set to "Mar" position: in this case serious and irreversible damage may occur to the electric and electronic components.
- Before starting the engine, make sure the battery leads are properly tightened.
- Do not make use of "fast-charging" power supplier to crank the engine.
- Completely disconnect the battery from the electrical system before submitting it to charging operations.
- Do not start the engine, if some electric connections are interrupted or components have been removed.
- Do not earth any low/high voltage point and do not interrupt any connection when the engine is running.
- In case of installation of accessories on vehicle, it is suggested to always disconnect the electronic control unit and perform an operational check of the new components. Never shunt, in any case, connections from the electronic control unit wiring.
- Before intervening on the various system components, make sure that no connectors are unplugged, clamps unloosened, and pipes are cut or clogged.
- Never connect or disconnect the plug from the electronic control unit leads when the ignition key is set to "On".
- Make sure that the shielded wire connectors are properly plugged in.
- Also make sure of the ignition system integrity, checking the spark plugs and the distributor cap for traces of humidityor cracks; also check that the wires between coil and distributor and between distributor and spark plugs are properly connected and that the insulating material is free from traces of burnout or scoring.
- In case of fuse replacement, remove the key from the ignition switch; should a fuse repeatedly blow, troubleshoot the short-circuit and never replace the fuse with a piece of cable.
  It is recommended to replace the blown fuse with a spare one bearing the same amperage.

AIR FILTER ASSY

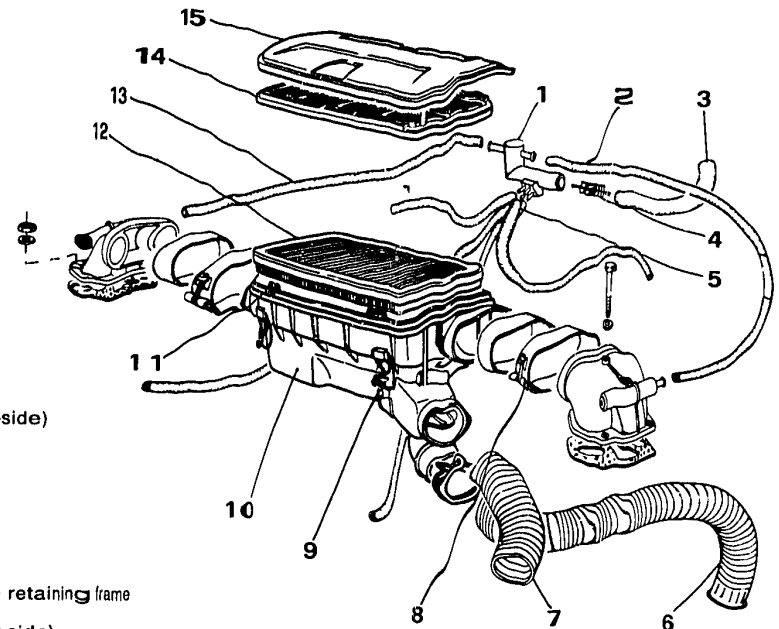

1 Blow-by union
2 Max. blow-by hose (left-side)
3 Blow-by hose
4 Flame trap
5 Min. blow-by hose
6 Hot air intake sleeve
7 Cold air intake sleeve
8 Clamp
9 Cover spring clip
10 Air filter body
11 Spring of filter cartridge retaining frame
12 Cartridge
13 Max. blow-by hose (right-side)
14 Filter cartridge retaining frame
15 Cover

PA003U201

AIR FILTER (continued)

REMOVAL - INSTALLATION

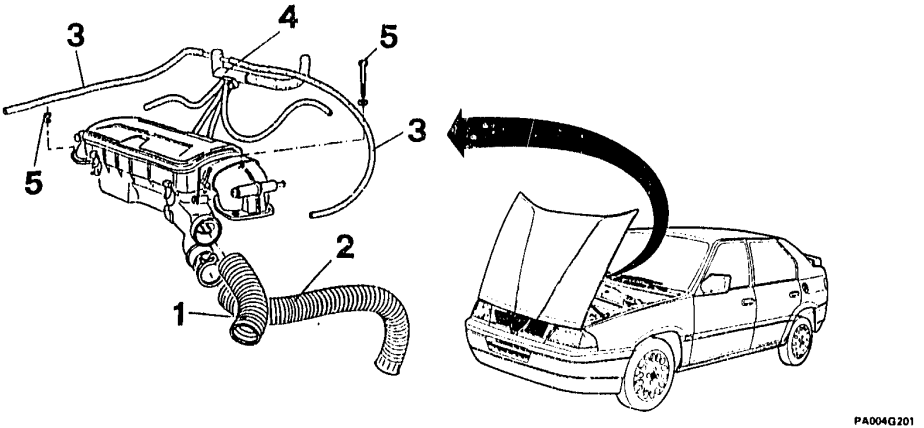

1. Disconnect the cold air intake sleeve from the air filter body.
2. Disconnect the hot air intake sleeve from the air filter body.
3. Disconnect the max. blow-by hoses from the air intake boxes.
4. Separate the blow-by union from the filter body.
5. Unscrew nuts and screws from the air intake boxes, then remove the complete filter body.

AIR FILTER (continued)

DISASSEMBLY - ASSEMBLY

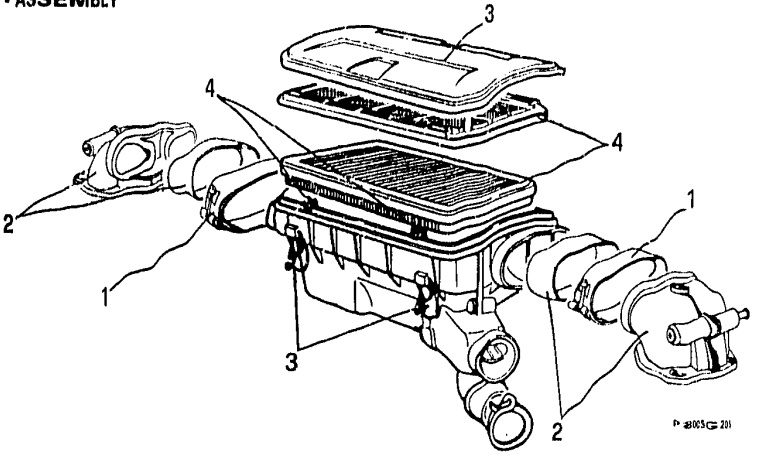

1. Remove the two side clamps.
2. Separate the air intake boxes and relevant gaskets from the filter body.
3. Release the four spring clips retaining the cover and remove the cover.
4. Release the four springs securing the cartridge retaining frame, then remove the frame along with the cartridge.

- Clean the filtering element and the frame by means of low-pressure compressed air, should it be necessary, replace the cartridge.
- When assembling, position the filtering element with the outer plastic edge facing upwards.

AIR MIXER

DESCRIPTION

The air mixer is mainly composed of a thermostat **1** which monitors the engine intake air temperature and consequentlydrives the opening and closure of valve **2** placed in the intake duct of the air filter. The valve mixes the outer cold air with the hot air intake, located on the exhaust pipes, under the left cylinder head; reversely, its operation can be in complete closure or opening position.

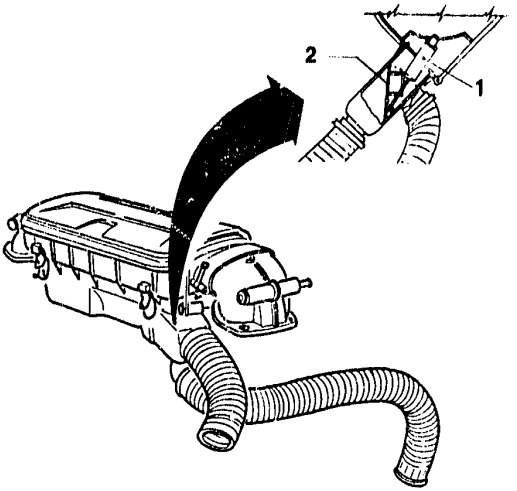

PA0060201

AIR MIXER (continued)

CHECKS AND INSPECTIONS

Hot air intake closing temperature

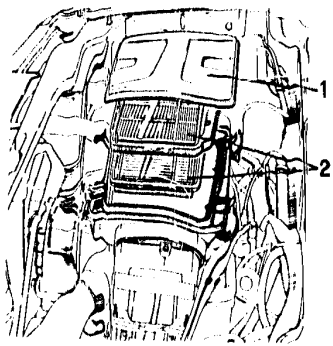

PA007G001

Temperature of hot air intake complete closure
> 24°C

- Warm up the engine till its operating temperature, then turn it off.

1. Remove the air filter body cover.
2. Remove the filter retaining frame and the cartridge.

- Apply a thermometer close to the thermostat and check that (with the hot air intake being closed) the valve opens completely at the prescribed temperature.

AIR MIXER

CHECKS AND INSPECTIONS (continued)

Cold air intake closure temperature

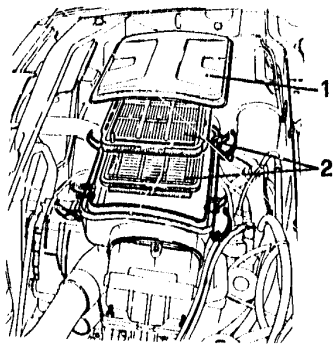

PA008G201

Temperature of cold air intake complete closure
18° + 22°C

1. By operating with cold engine, remove the air filter body cover.
2. Remove the cartridge retaining frame and the cartridge.

- Apply a thermometer close to the thermostat and check that (with the cold air intake being closed) the valve closes completely at the prescribed temperature.

AIR MIXER (continued)
THERMOSTAT REPLACEMENT

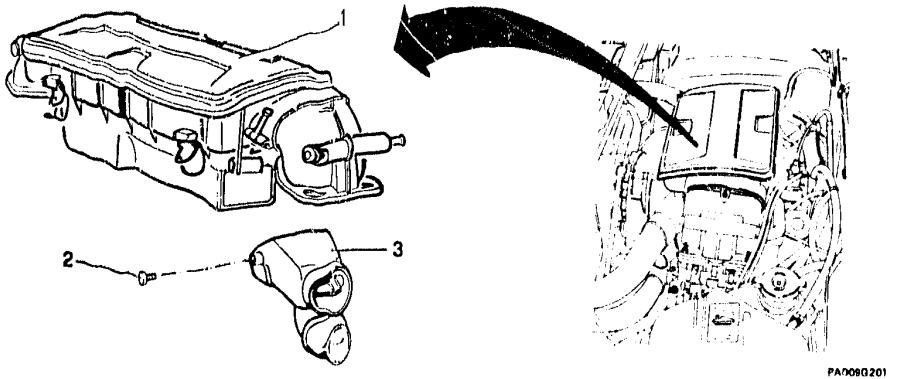

1. Remove the air filter
2. Remove the screw securing the air intake to the filter body.
3. Replace the air intake complete with the thermostat unit.

- Connect the air intake to the filter body by screwing down the relevant screw.
- Re-install the air filter on the engine.

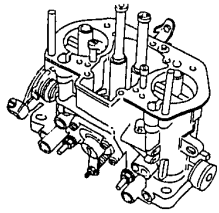

TWIN CARBURETOR ENGINE

CARBURETORS

ACCELERATOR CONTROL ADJUSTMENT

CARBURETORS (DELL'ORTO) TWIN CARBURETOR TYPE)

REMOVAL - INSTALLATION ..... 04 - 10
CHECKS AND ADJUSTMENTS ..... 04 - 11
Float leveling ..... 04 - 11
Needle valve tightness ..... 04 - 12
Accelerating pump adjustment at the bench ..... 04 - 13
Accelerating pump adjustment on vehicle ..... 04 - 14

CARBURETORS (WEBER TWIN CARBURETOR TYPE)

REMOVAL - INSTALLATION ..... 04 - 16
CHECKS AND ADJUSTMENTS ..... 04 - 17
Float leveling ..... 04 - 17
Needle valve tightness ..... 04 - 18
Accelerating pump adjustment at the bench ..... 04 - 19
Accelerating pump adjustment on vehicle ..... 04 - 20

ACCELERATOR CONTROL ADJUSTMENT ..... 04 - 22

CARBURETORS (DELLORTO TWIN CARBURETOR TYPE)

REMOVAL - INSTALLATION

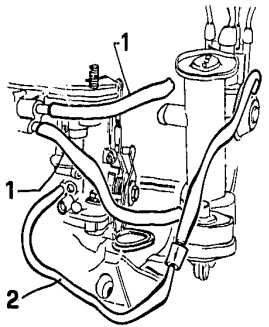

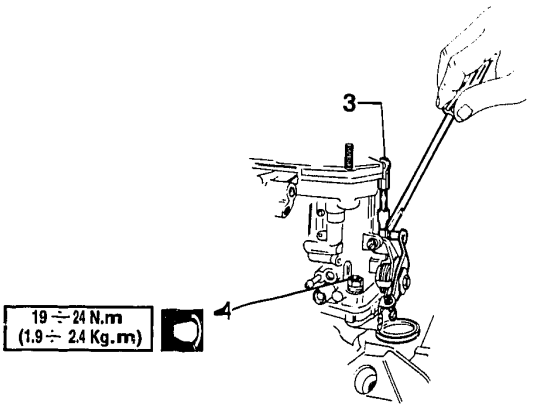

PA010G201

- Remove the sir filter complete assy
1. Disconnect the fuel delivery pipes from the carburetor.
2. As for the left carburetor, also disconnect the vacuum advance hose.
3. Detach the carburetor drive tie-rod from the idle levers.
4. Unscrew the carburetor fixing nuts then remove the carburetor.

CARBURETORS (DELLORTO TWIN CARBURETOR TYPE) (continued)

CHECKS AND ADJUSTMENTS

Float levelling

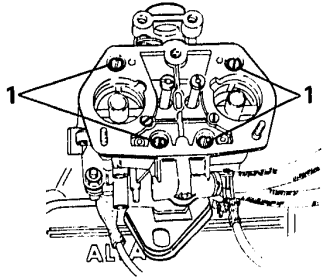

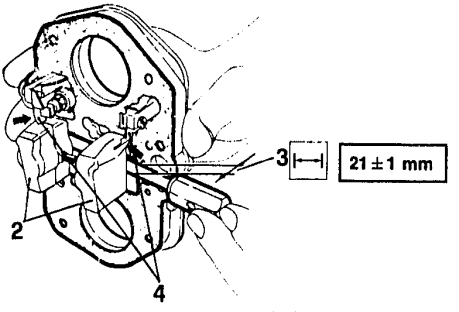

PA011G201

1. Operate on vehicle and after detaching the complete air filter assy, disassemble the float chamber cover by removing the four fixing screws.
2. Check that the float weights as prescribed and specified on the same component.

- Keep the float chamber cover in an upright position so that the float is slightly in contact with the needle valve.

3. Check that the distance between the float and the chamber cover surface with gasket installed is the prescribed one.
4. Should it be necessary to correct the dimension, suitably bend the half-float structure where indicated in figure.

CHECKS AND ADJUSTMENTS (continued)

Needle valve tightness

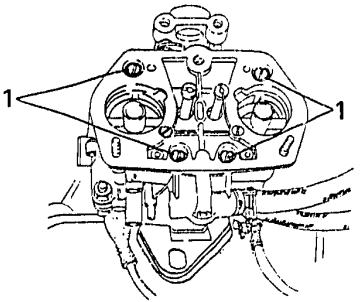

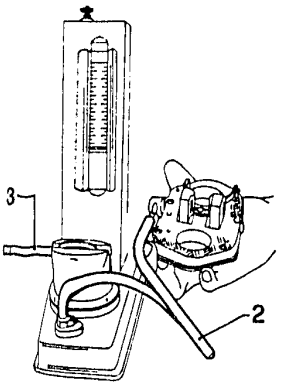

PB012G201

- Remove the complete air filter assy.
1. Remove the float chamber cover by unscrewing the four fixing screws.
2. Connect the plastic hose of a vacuum gauge to the fuel intake union of the float chamber cover, paying attention to keep it in a horizontal overturned position.
3. By acting on the instrument cam, load the air pump with a consequent rise of the mercury in the column.
- The column level will have to be steady for at least ten seconds, otherwise replace the needle valve.

CHECKS AND ADJUSTMENTS (continued)

Accelerating pump adjustment at the bench

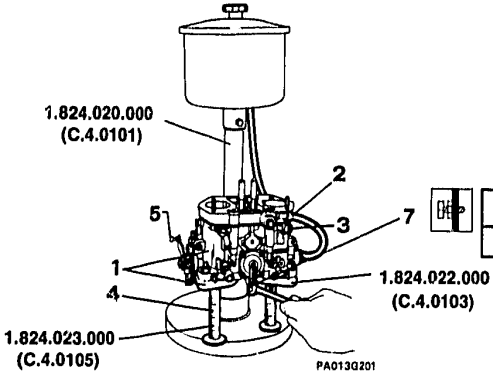

Petrol volume corresponding to 20 strokes
6 ± 0.5 cm³

screw down	+ petrol delivery
unscrew	- petrol delivery

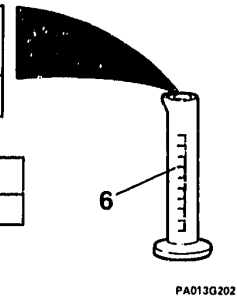

1. Secure the carburetor on support No. 1.824.022.000 (C.4.0103) of dial gauge No. 1.824.020.000 (C.4.0101).
2. Supply the carburetor by connecting it to the instrument furl tank.
3. Plug the hole of the recycling hose.
4. Place two graduated measuring tubes No. 1.824.023.000 (C.4.0105)under the exhaust pipies of the support.
5. Carry out twenty strokes by acting on the control lever.
6. Check that the volume of petrol collected in each measuring tube corresponds to the prescribed value.
7. Should the volume value outrange the prescribed ones, suitably correct the pump delivery by acting on the adjusting nut of the pump control tie rod.

CHECKS AND ADJUSTMENTS (continued)

Accelerating pump adjustment on vehicle

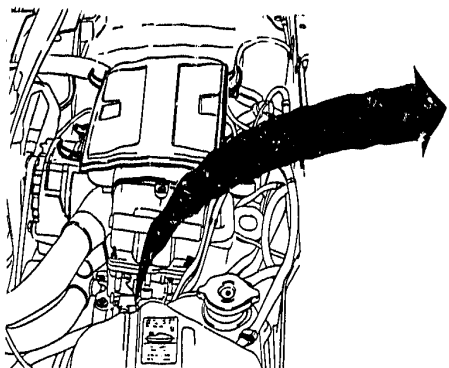

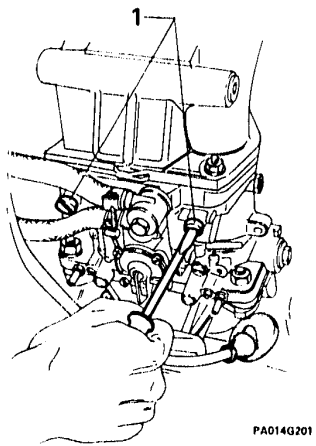

- It is possible to adjust the accelerating pump on vehicle by means of the test tool No. 1.824.028.001 (C.4.0122).

1. Unscrew the two pump jet plugs and remove the jets from the carburetor.

CHECKS AND ADJUSTMENTS

Accelerating pump adjustment on vehicle (continued)

1. Install the equipment No. 1.824.028.001 (C.4.0122) on vehicle by tightening the unions on the plug threaded seats.
2. Insert the jets, previously removed from the carburetor, on the hose ends.
- Completely fill the carburetor float chamber by shortly running the engine.
3. Bleed the air from the hoses by acting on the accelerator.
- Drain the fuel from the burettes.
- Work the accelerator pedal until the fuel level coincides with the "O" mark on the burettes.

- Perform twenty strokes by acting on the control lever.

4. Check that the petrol volume collected in each measuring tube ranges within the prescribed values. Otherwise correct the pump delivery. Dismantle the test equipment and proceed to the re-assembly by reversing disassembly operations.

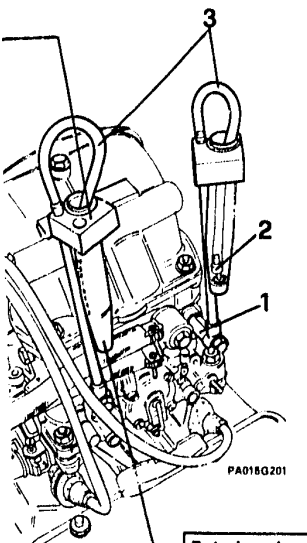

Petrol volume corresponding to 20 strokes
6 ± 0.5 cm³

CARBURETORS (WEBER TWIN CARBURETOR TYPE)

REMOVAL - INSTALLATION

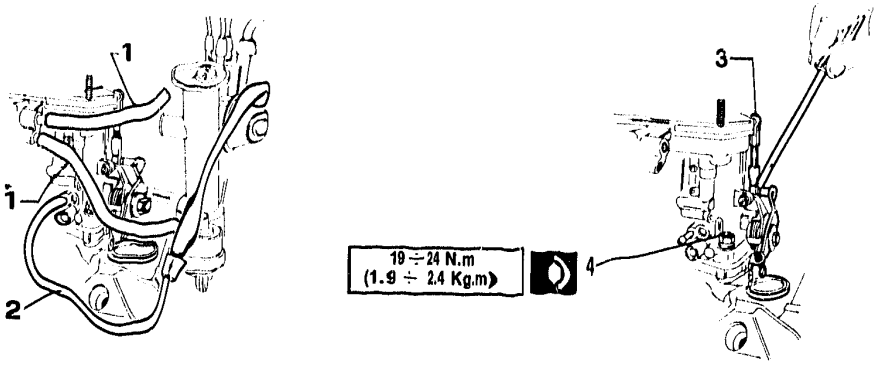

- Detach the complete air filter assy
1. Disconnect the petrol delivery hoses from the carburetor.
2. As for the left carburetor, also disconnect the vacuum advance hose.
3. Detach the carburetor control tie rods from the idle levers.
4. Unscrew the carburetor fixing nuts, then remove the carburetor.

CARBURETORS (WEBER TWIN CARBURETOR TYPE) (continued)

CHECKS AND ADJUSTMENTS

Float levelling

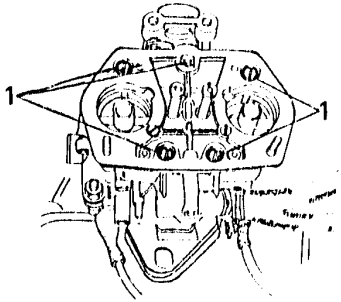

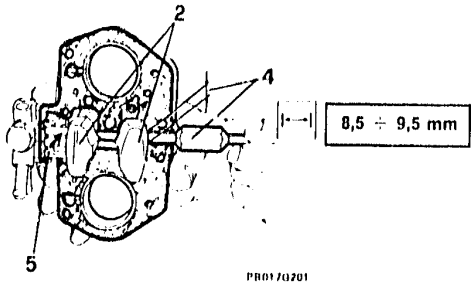

1. Operate on vehicle and, after detaching the complete air filter assy, dismantle the float chamber cover by removing the fixing screws.
2. Check that the float weights as prescribed and specified on the same component.

- Keep the float chamber cover in an upright position.

4. By means of a graduated punch, check that the distance between float and float chamber cover with gasket installed is as specified.
5. To perform any correction of the dimension, replace the washer under the needle plug or suitably bend the half-float structure where indicated in figure.

CHECKS AND AJUSTMENTS (Continued)

Needle valve tightness

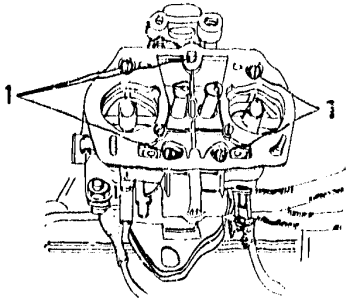

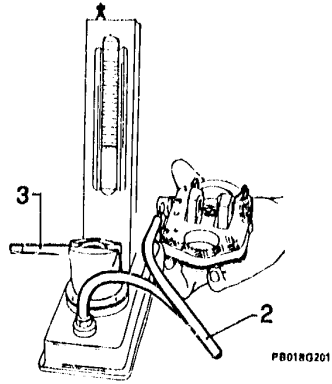

- Remove the complete air cleaner
1. Remove the cover of the tank by unscrewing the five screws.
2. Connect the plastic pipe of the vacuum gauge to the petrol entry pipette of the tank cover, taking care to hold it in position horizontally reversed.
3. Working on the cam of the instrument, load the pump with air so that the mercury column rises.
- The column should remain stable for at least ten seconds; otherwise, replace the needle valve.

CHECKS AND ADJUSTMENTS (continued)

Accelerating pump adjustment at the bench

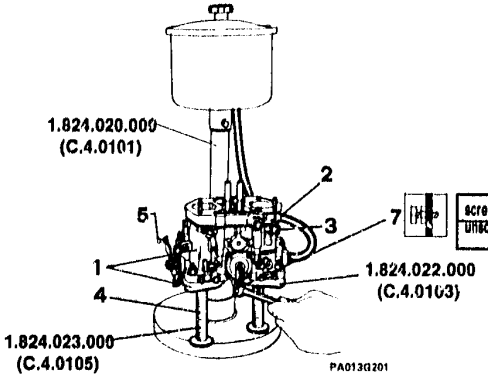

screw down	+ delivery
unscrew	- delivery

Petrol volume corresponding to 20 strokes	
Engine 30743	5 ÷ 8 cm³
Engines 30732 30734	6 ÷ 9 cm³

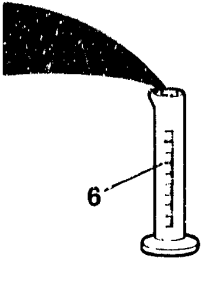

1. Secure the carburetor on support No. 1.824.022.000 (C.4.0103) of test instrument No. 1.824.020.000 (C.4.0101).
2. Supply the carburetor by connecting it to the instrument's tank.
3. Plug the hole of the recycling hose.
4. Place two graduated measuring tubes No. 1.824.023.000 (C.4.0105)under the support exhaust pipes.
5. Carry out twenty strokes by acting on the control lever.
6. Check that the petrol volume collected in each measuring tube corresponds to the prescribed value.
7. Should this volume value outrange the prescribed one, suitably correct the pump delivery by acting on the adjusting nut of the pump control tie rod.

CHECKS AND ADJUSTMENTS (continued)

Accelerating pump adjustment on vehicle

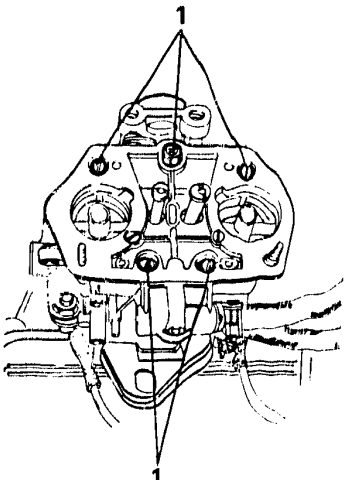

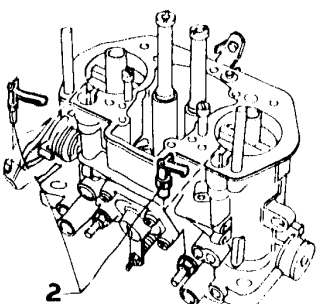

PA020Q201

- Remove the complete air filter assy
1. Unscrew the five fixing screws of the float chamber cover and remove the cover with the relevant gasket.

2. Extract from the carburetor the two jets of the accelerating pump.

CHECKS AND ADJUSTMENTS

Accelerating pump adjustment on vehicle (continued)

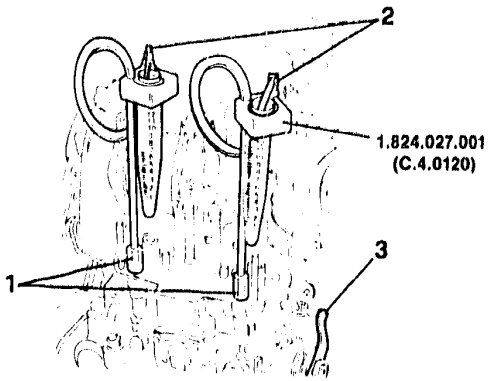

PA021G201

Petrol volume corresponding to 20 strokes	
Engine 30743	5 – 8 cm³
Engines 30732 30734	6 – 9 cm³

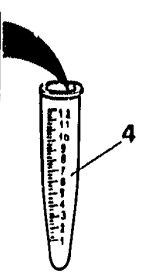

PA021G202

1. Fit the unions of the test instrument No. 1.824.027.001 (C.4.0120) into the jet seats.
2. Insert the accelerating pump jets on the ends of the hoses.
- Make sure that the carburetor float chamber is completely filled with petrol.
- Bleed the air from the hoses by repeatedly acting on the accelerator.
- Drain the fuel from the burettes.
3. Carry out twenty strokes by acting on the control lever.
4. Check that the volume of fuel collected in each burette is within the specified limits.
- Should it be necessary, suitably correct the pump delivery.
- Remove the test instrument and proceed to the re-assembly by reversing disassembly operations.

ACCELERATOR CONTROL ADJUSTMENT

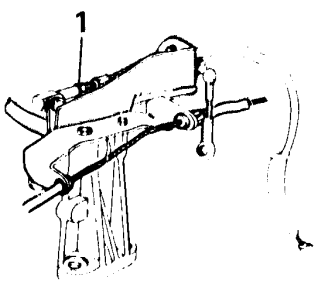

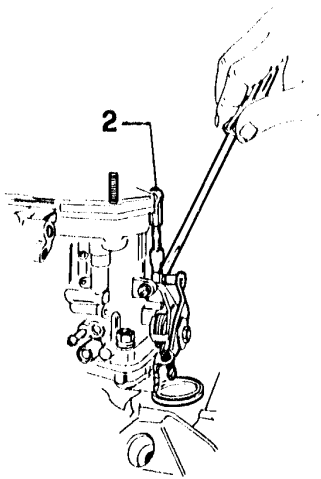

PA022Q201

1. Disconnect the accelerator cable from the left lever of the throttle valve control shaft.

2. Disconnect the tie rods from the accelerator control idle levers, by acting on the relevant joints.



ACCELERATOR CONTROL ADJUSTMENT (continued)

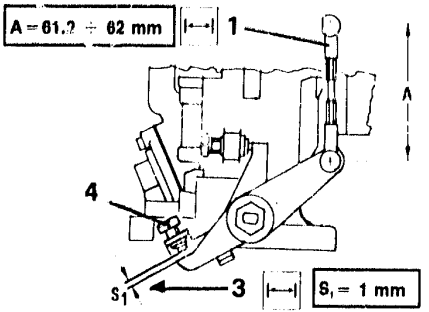

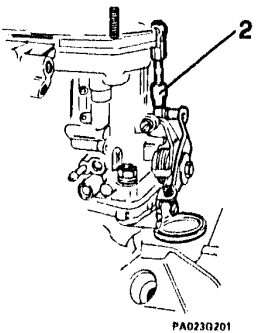

1. Check that length "A" of the idle lever control tierod corresponds to the prescribed value.
- If necessary, proceed to the adjustment by screwing down or unscrewing the tie rods till reaching the prescribed "A" dimension.
2. Fit the tie rods on levers.
3. Check that clearance "S1" between limit stop screw and idle lever is the prescribed one.
4. If necessary, proceed to the adjustment by acting on the limit stop screw.

ACCELERATOR CONTROL ADJUSTMENT (continued)

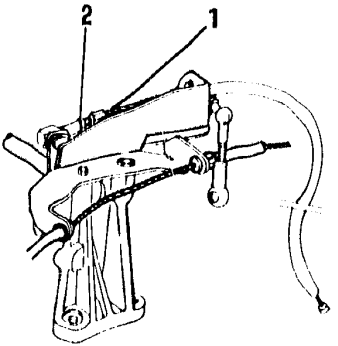

PA024G201

Clearance between lever and limit stop	1 mm

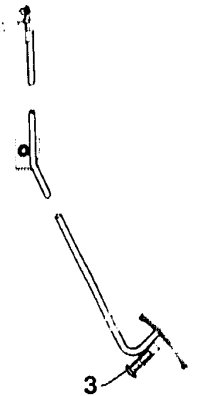

PA024G202

1. Connect the accelerator flexible cable, paying attention to respect the prescribed clearance between idle levers and limit stop screws.
2. If necessary, adjust the accelerator cable clearance by acting on the adjusting screw.
   - With the accelerator control pedal pressed to its limit stop position, check that the clearance between throttle valve control lever and relevant limit stop is the prescribed one.
3. If necessary, proceed to the adjustment by acting on the pedal limit stop screw.

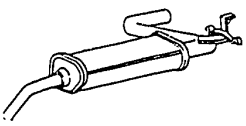

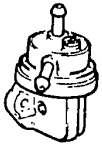

TWIN CARBURETOR ENGINE

FUEL SUPPLY SYSTEM

EXHAUST SYSTEM

FUEL SUPPLY SYSTEM

ASSY ..... 04 - 25
FUEL TANK ..... 04 - 26
Removal - Installation ..... 04 - 26
Disassembly - Reassembly ..... 04 - 28
CHECKS AND INSPECTIONS ..... 04 - 29
FUEL PUMP ..... 04 - 30
Removal - Installation ..... 04 - 30
CHECKING FUEL DELIVERY PRESSURE AND SEALING ..... 04 - 31

EXHAUST SYSTEM

ASSEMBLY (Specific for 4x2 models) ..... 04 - 32
ASSEMBLY (Specific for 4x4 models) ..... 04 - 33
FRONT PART ..... 04 - 34
CENTRAL PART ..... 04 - 35
REAR PART ..... 04 - 36
HOT AIR INTAKE ..... 04 - 37
CHECK AND ADJUSTMENT OF EXHAUST GAS EMISSION ..... 04 - 38

FUEL SUPPLY SYSTEM

ASSY

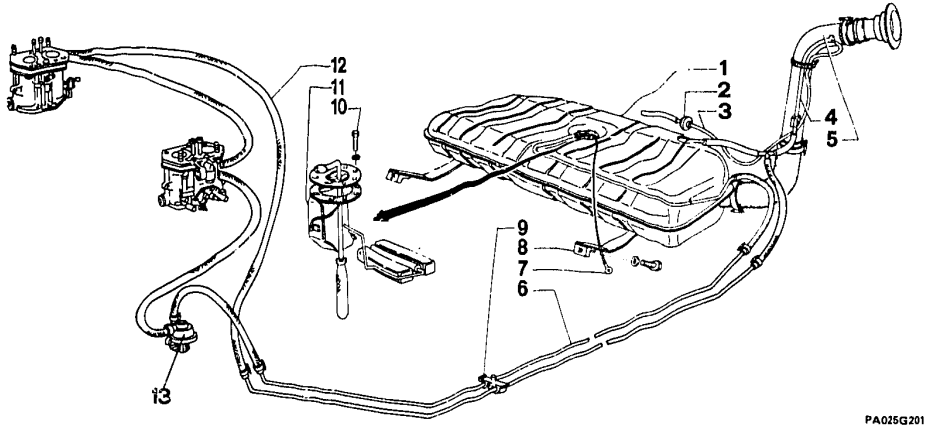

1 Fuel tank
2 Check valve
3 Breather hose
4 Breather hose when filling
5 Filler neck
6 Fuel feed pipe
7 Ground cable
8 Strap
9 Fuel feeding pipe holding clamps
10 Float securing screw
11 Float assy
12 Fuel return pipe
13 Fuel pump

FUEL SUPPLY SYSTEM (continued)

FUEL TANK

Removal - Installation

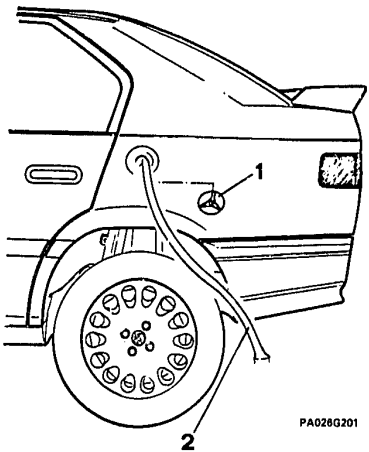

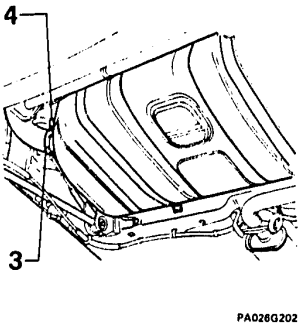

- Disconnect the battery ground cable.
1. Remove the filler cap from the fuel filler neck.
2. Suck all the petrol out of the fuel tank by means of a pump.
3. Loosen the clamp securing the fuel filling sleeve to the tank.
4. Loosen the clamp securing the pipe to the fuel feeding hose.



FUEL TANK

Removal - Installation (Continued)

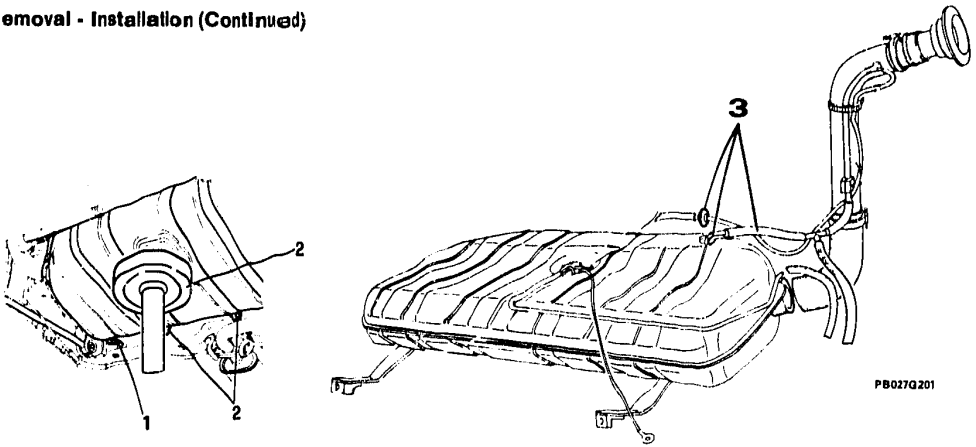

1. Unscrew and remove the screw fastening the earth cable to the body.
2. Support the tank, using a hydraulic column-type jack and unscrew the screws fastening the two supporting straps to the body.
- Lower the jack slightly.
3. Disconnect the breather tube with the attached check valve.
- Remove the entire tank, lowering the jack.
- If necessary, remove the fuel supply piping, loosening the connecting clamps and releasing them from the supporting clips.

FUEL TANK (Continued)
Disassembly - Reassembly

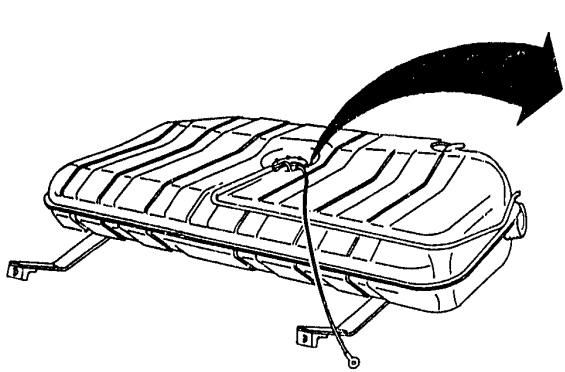

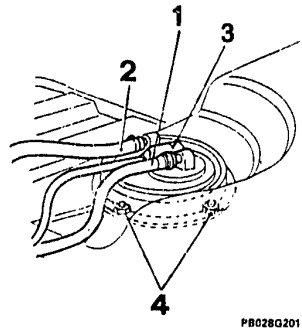

1. Disconnect the fuel delivery pipe from the filler neck on the float.
2. Disconnect the fuel return pipe from the filler neck on the float.
3. Disconnect the electrical wiring from the float.
4. Unscrew the six screws securing the float to the tank, then remove the float with its gasket.

- When reassembling, replace the gasket with a new one.

FUEL SUPPLY SYSTEM (continued)
CHECKS AND INSPECTIONS

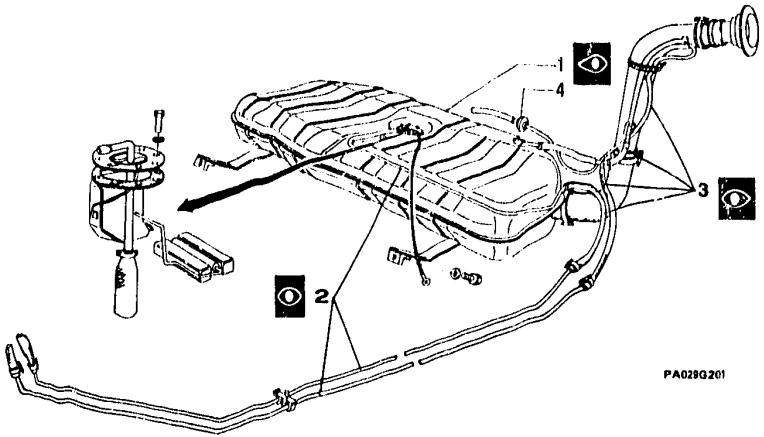

1. Check the fuel tank for integrity.
2. Check that the pipes do not show any evidence of oxidation, clogging or dents.
3. Check that the hoses are not porous and do not show any evidence of wear.
4. Check that the retaining valve is working correctly as follows:

a. Blow a jet of air into the valve through the union on the neck side and check that it offers a slight resistance to the flow of air.
b. Blow a jet of air into the valve through the union on the external side and check that the valve offers no resistance to the flow of air.

FUEL PUMP
Removal - Installation

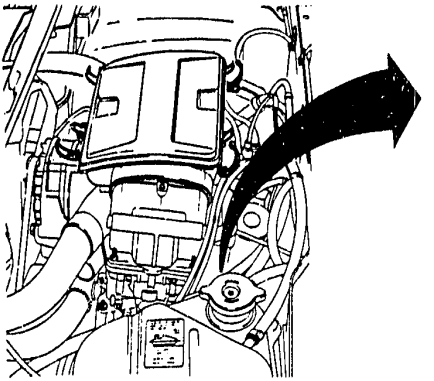

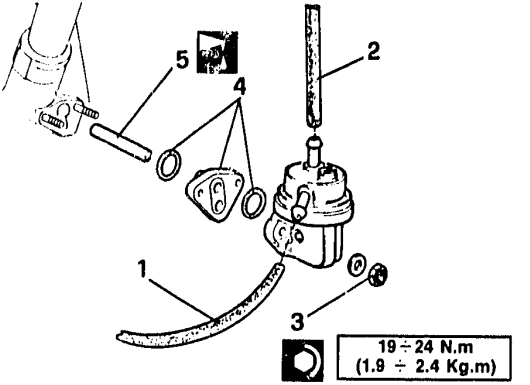

PA030Q201

1. Disconnect the fuel inlet pipe from the fuel pump.
2. Disconnect the fuel delivery pipe from the pump.
3. Unscrew the two fixing nuts and remove the fuel pump from the engine rear cover.
4. Remove the spacer with the relevant gaskets.
5. Remove the control cap.

CHECKING FUEL DELIVERY PRESSURE AND SEALING

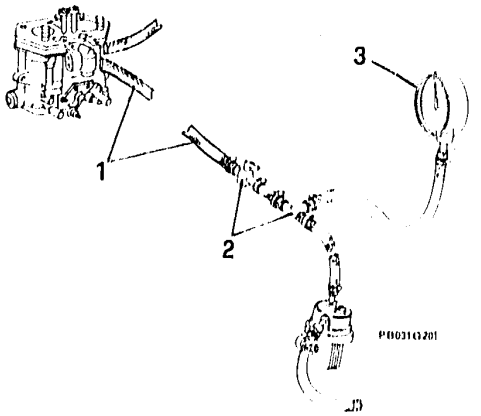

FISPA pump	17.7 ÷ 29.4 kPa (0.177 ÷ 0.294 bar at 5000 r.p.m. 0.18 ÷ 0.30 Kg/cm²)
SAVARA - GILARD pump	17.7 ÷ 29.4 kPa (0.177 ÷ 0.294 bar at 6000 r.p.m. 0.18 ÷ 0.30 Kg/cm²)

1. Detach the fuel supply hose between the pump and the left carburetor.
2. Insert a pipe with a T union and a cutoff cock between pump and carburetor.
3. Connect a pressure gauge to the other end of the pipe.

- Start the engine and check that the pump delivery pressure is as specified, with the cutoff cock downstream the pressure gauge being closed and the pressure gauge being held at the same height as the pump.
- Should the detected values be different from the prescribed ones, replace the pump.

EXHAUST SYSTEM

ASSEMBLY (Specific for 4x2 models)

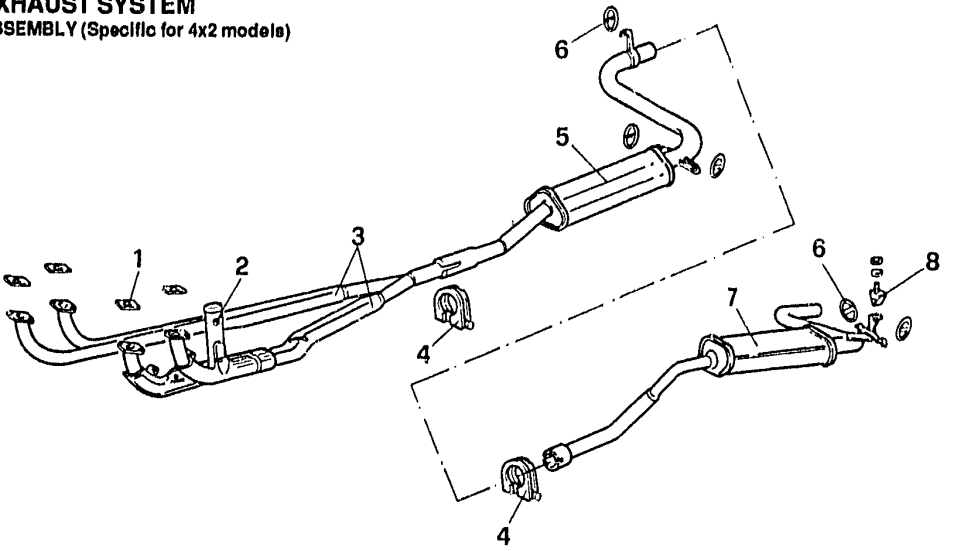

1 Gasket
2 Hot air intake
3 Front part manifolds
4 Clamp
5 Muffler- central part
6 Supporting spring ring
7 Muffler - rear part
8 Buffer

EXHAUST SYSTEM (continued)

ASSEMBLY (Specific for 4x4 models)

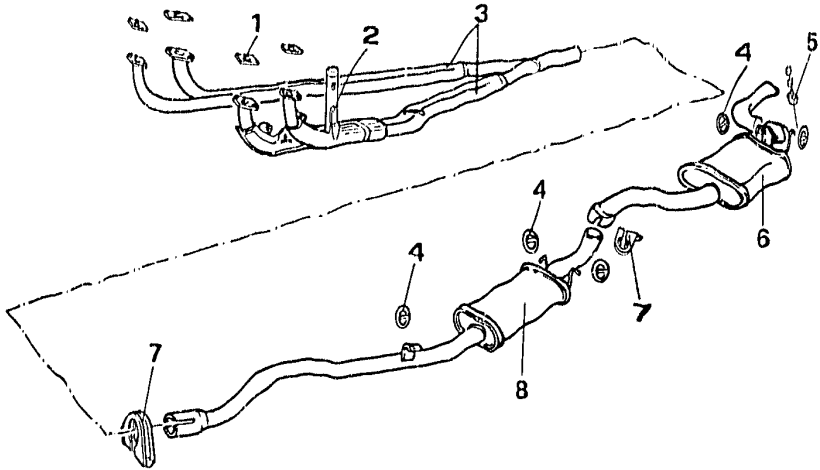

1 Gasket
2 Hot air intake
3 Front part manifolds
4 Rubber supporting ring
5 Rubber pad
6 Rear part silencer
7 Clamp
8 Central part silencer

EXHAUST SYSTEM (continued)

FRONT PART

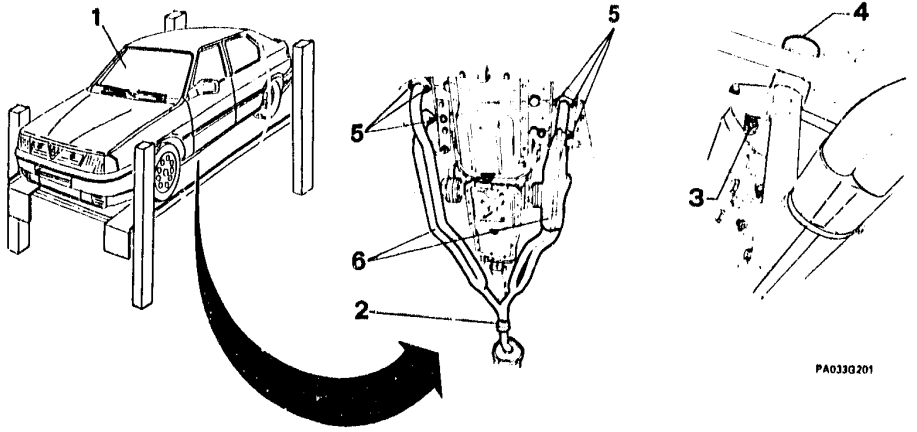

1. Place the vehicle on a lift platform and lift it.
2. Unloose the clamp connecting the front part to the central one and move it aside.
3. Unscrew the nut fixing the hot air intake bracket to the cylinder head.
4. Withdraw the hot air intake sleeve.
5. Unscrew the nuts fixing the manifold flanges to the cylinder heads.
6. Remove the forward section of the exhaust pipe.

EXHAUST SYSTEM (continued)

CENTRAL PART

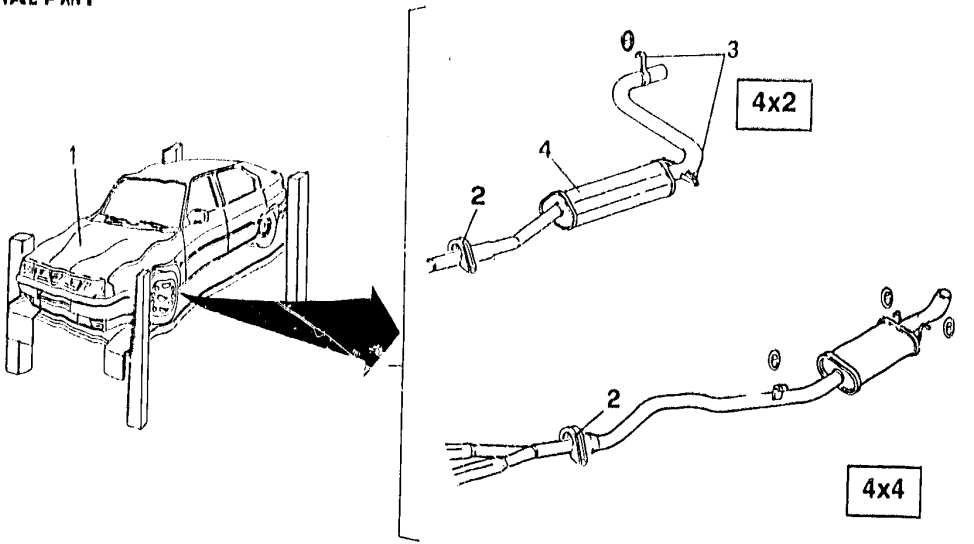

1. Lift the vehicle placed on the lift platform.
   - Remove the rear section of the exhaust pipe.
2. Unloose the clamps securing the central to the front part of the exhaust pipe.
3. Remove the spring rings from the supporting brackets.
4. Remove the central part of the exhaust pipe.

EXHAUST SYSTEM (continued)

REAR PART

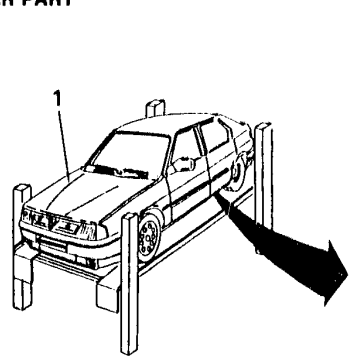

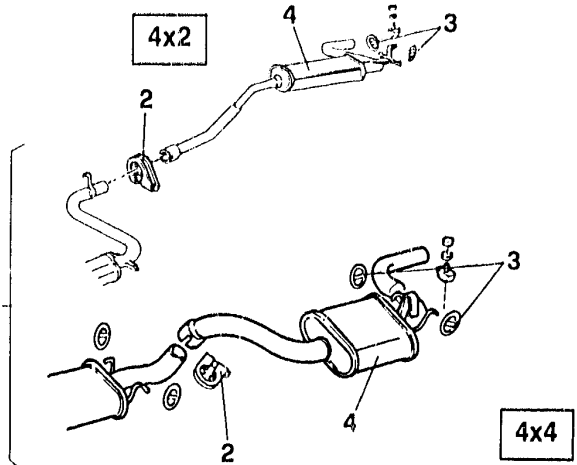

1. Raise vehicle on lift.
2. Slacken clamp connecting central section to tail section.
3. Release the supporting brackets from the rubber rings.
4. Remove the rear part.

EXHAUST SYSTEM (continued)

HOT AIR INTAKE

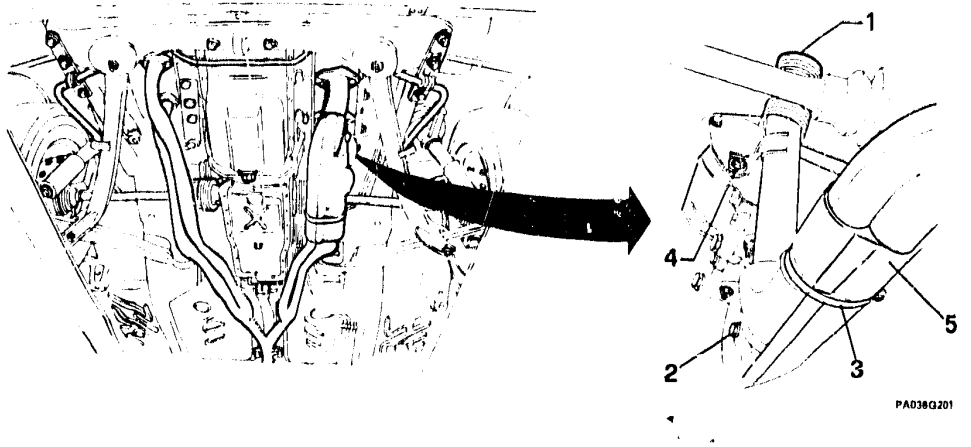

- Lift the vehicle placed on the lift platform.
1. Withdraw the sleeve from the hot air intake.
2. Unscrew the bolt for the connection to the manifolds.
3. Remove the clamp.
4. Unscrew the nut fixing the supporting bracket to the left cylinder head.
5. Remove the hot air intake.

CHECK AND ADJUSTMENT OF EXHAUST GAS EMISSION

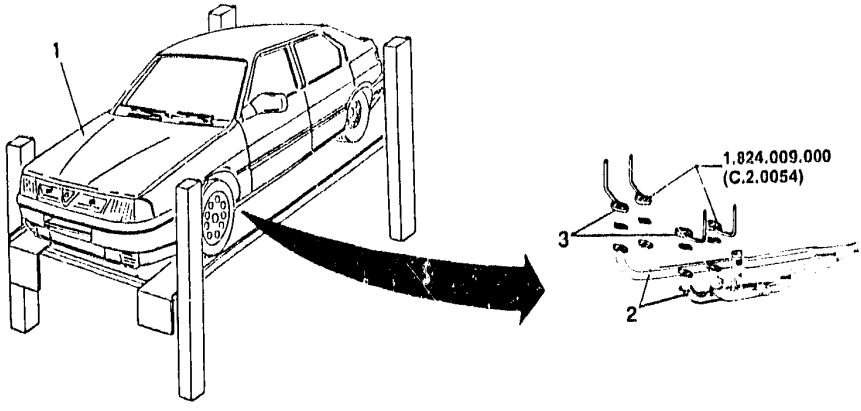

- Before proceeding with the operation, check that the accelerator cable is correctly adjusted (see 04-22).
1. Raise the vehicle on a lift.
2. Disconnect the exhaust manifolds from the heads.
3. Between each flange of the exhaust manifold and the relative attachment on the heads insert a flangette N. 1.824.009.000 (C.2.0054) and connect the manifold to the heads.

NOTE **Four pipettes lead into the engine compartment and when fitted with plugs can be used to check the exhaust emissions for each cylinder.**

CHECK AND ADJUSTMENT OF EXHAUST GAS EMISSION (continued)

1. Connect an electronic rev counter to the engine.
2. Open the two vacuum intakes of each carburettor.
3. Connect the exhaust gas tester to each tube a pipetta of tool N. 1.824.009.000 (C. 2.0054).
4. Connect the intakes of the vacuum mercury gauge to each of the vacuum intakes.

- Connect the gas extractor to the end of the exhaust pipe.
- Start the engine and run it until it reaches normal operating temperature.
- Check that the idle speed and the percentage of exhaust CO are within the specified limits.

Idle speed	850 - 1 000 r.p.m.
%CO in volume	1.5 - 3.5

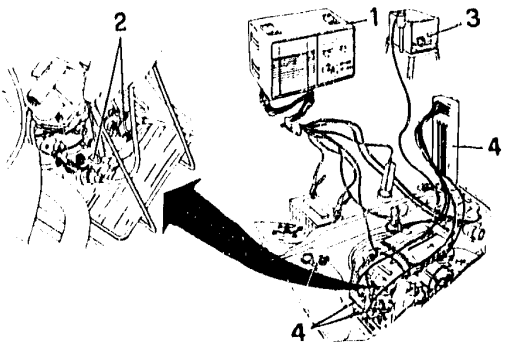

CHECK AND ADJUSTMENT OF EXHAUST GAS EMISSION (continued)

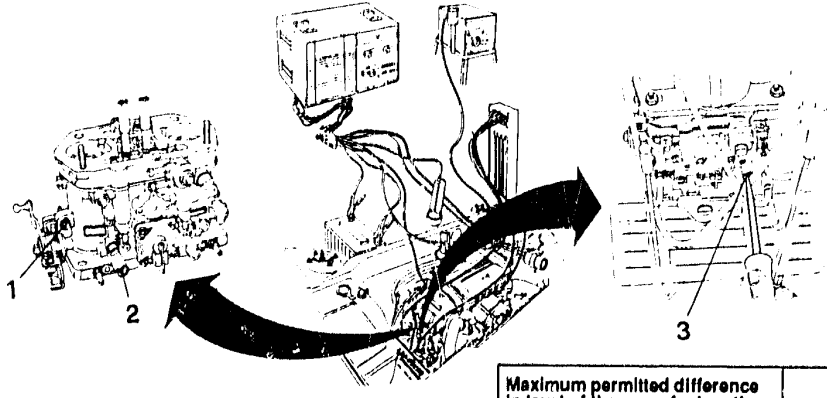

Maximum permitted difference in level of the same fuel on the gas valves	40 mmHg

- Nel caso la percentuale di CO rilevata fosse superiore a quella ammessa operare come segue:

1. Act on the gas valve adjustment screws in order to obtain the idle speed and the alignment of the gas valves between the right and left carburettors as specified.

If the cylinders of the same carburettor are out of line it is necessary to overhaul or replace the carburettor.

2. Remove the seal caps from the mixing valve seats.
3. Act on the mixing valves on each cylinder until the specified exhaust gas CO percentage is reached.

- Check that the engine idle speed is regular.
- Disconnect the previously installed equipment.

TDS

TWIN CARBURETOR ENGINE

TECHNICAL DATA AND SPECIFICATIONS

SPECIAL TOOLS

TECHNICAL DATA AND SPECIFICATIONS
CHECKS AND ADJUSTMENTS ..... 04 - 41
Fuel pump ..... 04 - 41
Accelerator control ..... 04 - 42
Hot - cold air automatic mixer ..... 04 - 42
Checking idle speed and exhaust emissions ..... 04 - 42
CARBURETORS ..... 04 - 43
FLUIDS AND LUBRICANTS ..... 04 - 46
TIGHTENING TORQUES ..... 04 - 46
SPECIAL TOOLS ..... 04 - 47

TECHNICAL DATA AND SPECIFICATIONS

CHECKS AND ADJUSTMENTS

Fuel pump

Model	TYPE	ALFA ROMEO Part Number	Pump pressure	Pump Delivery
FISPA	Mechanical	60504214	17.7 ÷ 29.4 kPa (0.177 ÷ 0.294 bar) (0.18 ÷ 0.30 kg/cm²) at 5000 r.p.m.	null
SAVARA-GILARD		60504287	17.7 ÷ 29.4 kPa (0.177 ÷ 0.294 bar) (0.18 ÷ 0.30 kg/cm²) at 6000 r.p.m.	null

CHECKS AND ADJUSTMENTS (Continued)

Accelerator control

Length of carburetor idle lever control tie rod		
A	mm	61.2 ÷ 62
Play between limit stop screw and throttle valve control idle lever		
S_1	mm	1
Play between carburetor lever and maximum opening limit stop		
S_2	mm	1

Hot-cold air automatic mixer (*)

Complete closure of hot air intake with engine temperature °C thermostat temperature (1)	hot > 24°
Complete closure of hot air intake with engine temperature °C thermostat temperature (1)	cold < 18° ÷ 22°

(*) Adjustment check must be performed with the engine stopped

(1) Temperature close to the thermostat inside the air filter

Checking idle speed and exhaust emissions

Engine idle r.p.m. (with engine warm, gearbox in neutral and clutch engaged)	r.p.m.	850 ÷ 1000
Percentage of exhaust CO at idle speed	% in vol.	1,5 ÷ 3,5

CARBURETORS

ENGINE	Engine capacity	1.200	
	Type	30743	
CARBURETOR	Model	Weber twin carburetor 40IDF69-40IDF68	Dellorto twin carburetor DRLA40FD-DRLA40FS
	Position	Right (1) Left (1)	Right (1) Left (1)
Choke tube	Ø mm	32	32
Primary main jet	Ø *	140	142
Corrector jet	Ø *	190	180
Diffuser code number		-	9164.4
Idling jet	Ø *	50	52
Idling corrector jet	Ø *	195	220
Hole diameter progression	Ø *	100-120-130-140-150	100-140-140-140-140
Pump jet	Ø *	35	35
Needle plug	Ø *	175	150
Float weight	g	11.8	10
Starting jet	Ø *	0.90	0.80
Starting diffuser		F.7	7482
Accelerating pump petrol volume for 20 strokes per duct	cu.cm	5 ÷ 8	6 ± 0.5
Float chamber leveling	mm	-	21 ± 1

(1) Carburetor with sealed idle mixture adjusting screw
(*) Dimensions 10^{-2} mm

CARBURETORS (Continued)

ENGINE	Engine capacity	1.350	
	Type	30732	
CARBURETOR	Model	Webwe twin carburetor 40IDF83-40IDF82	Dellorto twin carburetor DRLA40FD-DRLA40FS
	Position	right (1) left (1)	right (1) left (1)
Choke tube	Ø mm	28	28
Main jet	Ø *	122	118
Corrector jet	Ø *	190	175
Diffuser code number		F67	9164.01
Idling jet	Ø *	50	46
Idling corrector jet	Ø *	195	220
Hole diameter progression	Ø *	100-120-130-140-150	100-140-140-140-140
Pump jet	Ø *	35	33 35 (2)
Needle plug	Ø *	175	150
Float weight	g	11.8	10
Starting jet	Ø mm	COF5	0.95
Starting diffuser		-	7482.03
Accelerating pump petrol volume for 20 strokes per duct	cu.cm	6 ÷ 9	6 ± 0.5
Float chamber leveling	mm	-	21 ± 1

(1) Carburetor with sealed idle mixture adjusting screw (2) Starting from chassis No 5803275
(*) Dimensions 10^{-2} mm

CARBURETORS (Continued)

ENGINE	Engine capacity	1.500	
	Type	30734	
CARBURETOR	Model	Weber twin carburetor 40IDF85-40IDF84	Dellorto twin carburetor DRLA40FD-DRLA40FS
	Position	right (1) left (1)	right (1) left (1)
Choke tube	Ø mm	30	30
Main jet	Ø *	135	135
Corrector jet	Ø *	190	200
Diffuser code number		F71	9164.01
Idling jet	Ø *	50	46
Idling corrector jet	Ø *	195	220
Hole diameter progression	Ø *	100-120-130-140-150	100-140-140-140-140
Pump jet	Ø *	33	33 35 (2)
Needle plug	Ø *	175	150
Float weight	g	-	10
Starting jet	Ø mm	80F5	95
Starting diffuser		-	7482.03
Accelerating pump petrol volume for 20 strokes per duct	cu.cm	6 ÷ 9	6 ± 0.5
Float chamber leveling	mm	-	21 ± 1

(1) Carburetor with sealed idle mixture adjusting screw (2) Starting from chassis No 5803275
(*) Dimensions 10^-2 mm

FLUIDS AND LUBRICANTS

Application	Type	Denomination	Q.ty
Spacer on accelerator pedal pin	GREASE	AGIP F1 Grease 15	-

TIGHTENING TORQUES

Part (Unit of measurement)	N.m	Kg.m
Carburetor fixing nuts	19 ÷ 24	1.9 ÷ 2.4
Carburetor pump fixing nuts	19 ÷ 24	1.9 ÷ 2.4

SPECIAL TOOLS

Identification number	Denomination	
1.824.020.000 (C.4.0101)	Carburetor pump test tool	 PA046G201
1.824.022.000 (C.4.0103)	Twin carburetor support	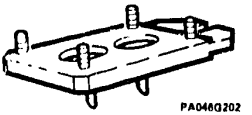 PA046G202
1.824.023.000 (C.4.0105)	Beaker for carburetor pump tests	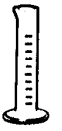 PA046G203

SPECIAL TOOLS (continued)

Identification number	Denomination	
1.824.027.000 (C.4.0120)	Weber carburetor pump test equipment	 PA047G201
1.824.028.001 (C.4.0122)	Dellorto carburetor pump test equipment	 PA047G202

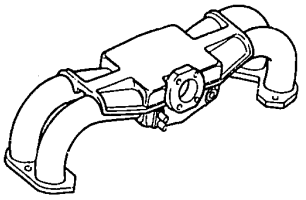

ELECTRONIC INJECTION
ENGINES (LE3 - Jetronic)

INJECTION SYSTEM WIRING
AIR FILTER
AIR FLOW METER
ADDITIONAL AIR SOLENOID VALVE
THROTTLE VALVE BODY
SUPPLY MANIFOLD

INJECTION SYSTEM WIRING
(LE3 - Jetronic SYSTEM) ..... 04 - 49
DESCRIPTION ..... 04 - 51
IMPORTANT GENERAL INFORMATION ..... 04 - 52

AIR FILTER
ASSY ..... 04 - 53
REMOVAL - INSTALLATION ..... 04 - 54

AIR FLOW METER
REMOVAL - INSTALLATION ..... 04 - 55

ADDITIONAL AIR SOLENOID VALVE
REPLACEMENT ..... 04 - 56
CHECKS AND INSPECTIONS ..... 04 - 58

THROTTLE VALVE BODY
REMOVAL - INSTALLATION ..... 04 - 59

SUPPLY MANIFOLD
ASSY ..... 04 - 61
REMOVAL - INSTALLATION ..... 04 - 62

INJECTION SYSTEM WIRING (LE3 Jetronic SYSTEM) - TAB. 1

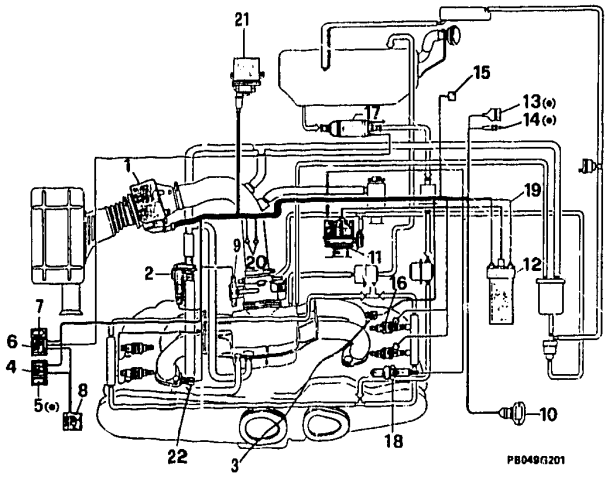

1 Airflow meter, injection ECU and intake air temperature sensor
2 Auxiliary air device
3 Engine coolant temperature sensor
4 Main relay
5 Lambda probe fuse (7.5 A) (●)
6 Fuel pump relay
7 Fuel pump fuse
8 Car body connection
9 Throttle min. and max. opening switch
10 Power module
11 Distributor

(●) Only for vehicles with catalyzer

INJECTION SYSTEM WIRING (LE3 Jetronic SYSTEM) - TAB. 2

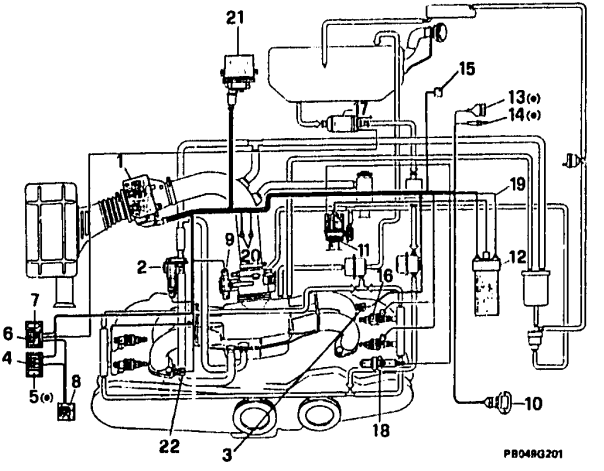

12 Ignition coil
13 Lambda probe resistance connector (●)
14 Lambda probe connector (●)
15 Alfa Tester connector
16 Electroinjectors
17 Fuel pump
18 Spark plugs
19 Engine r.p.m. reading
20 Centralized earthing points
21 Ignition ECU
22 Coolant temperature thermal contact

(●) Only for vehicles with catalyzer

DESCRIPTION

The electronic LE3 Jetronic system is composed by a fuel intermittent, indirect injection system equipped with an electronic control unit.
The parameters necessary to perform all different controls are monitored by special sensors and turned into electrical signals.
The electronic control unit collects all the data and computes the electroinjector opening time in relation to the temporary conditions of speed and load of the engine.

After computation, the control unit opens the electroinjectors for the scheduled time. As the difference between fuel pressure and air pressure in the manifold is kept constant by a regulator, the delivered fuel quantity is proportional to the injection time duration.

Furthermore, each time the injection control unit is able tomake the most suitable interventions in relation to the engine special running conditions (example: electroinjectors at cold starting, fuel cutt-off when releasing the accelerator pedal).
The injection control unit also controls the fuel pump delivery.
All vehicles equipped with catalytic converter, also feature a Lambda and relevant wiring and control unit which determines the difference of oxygen content between the exhaust gas and the outside air.

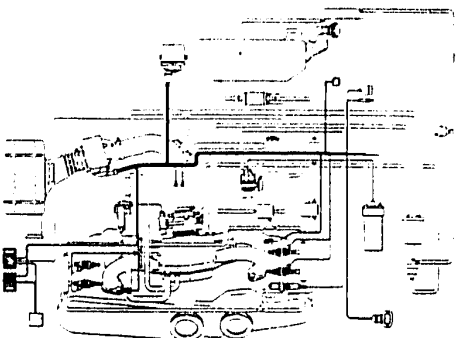

PB051G201

IMPORTANT GENERAL INFORMATION

- Never disconnect the battery when the engine is running or when the contact is made (ignition key set to "Mar" position); otherwise serious and irreversible damage may occur to the electric and electronic components of the system control unit.
- Before starting the engine, make sure the the battery leads are properly tightened.
- Do not make use of "fast-charging" power supplier to crank the engine.
- Completely disconnect the battery from the electrical system before submitting it to charging operations.
- Do not start the engine if some electric connections are interrupted or components have been removed.
- Do not earth any low/high voltage point and do not interrupt any connection when the engine is running.
- In case of installation of accessories on vehicle, it is suggested to always disconnect the electronic control unit and perform an operational check of the new components. Never shunt, in any case, connections from the electronic control unit wiring.
- Before intervening on the various system components, make sure that no connectors are unplugged, clamps unloosened, and pipes are cut or clogged.
- Never connect or disconnect the plug from the electronic control unit leads when the ignition key is set to "On".
- Make sure that the shielded wire connectors are properly plugged in.
- Also make sure of the ignition system integrity, checking the spark plugs and the distributor cap for traces of humidity or cracks; also check that the wires between coil and distributor and between distributor and spark plugs are properly connected and that the insulating material is free from traces of burnout or scoring.
- In case of fuse replacement, remove the key from the ignition switch; should a fuse repeatedly blow, troubleshoot the short-circuit and never replace the fuse with a piece of cable.
  It is recommended to replace the blown fuse with a spare one bearing the same amperage.

AIR FILTER
ASSY

1 Air filter cover
2 Clamp
3 Air flow meter/control unit
4 Corrugated sleeve
5 Air filter box fixing screw to the car body
6 Air filter box
7 Rubber mount
8 Spacer
9 Air intake sleeve
10 Filtering element

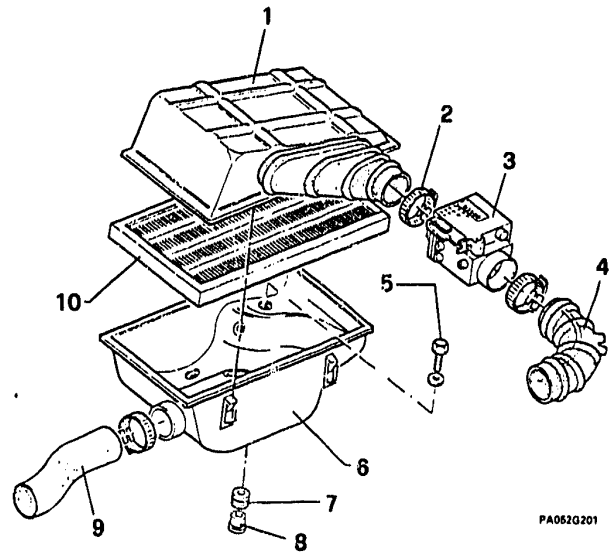

AIR FILTER (continued)

REMOVAL - INSTALLATION

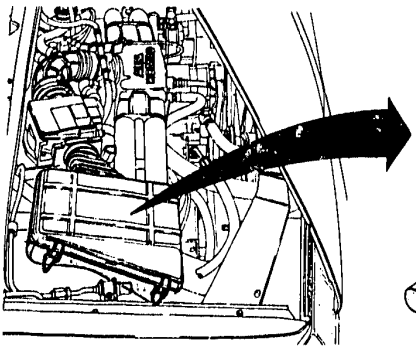

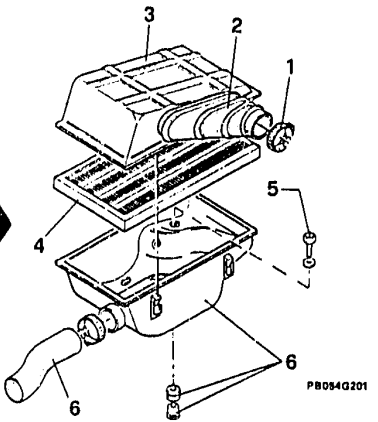

1. Unloose the clamp.
2. Disconnect the sleeve from the air flow meter cover.
3. Unhook the four spring clips fixing the cover, then remove the cover.
4. Remove the filtering element.
5. Unscrew the three screws fixing the filter box to the car body.
6. Remove the air filter box with its spring mounts and spacers after disconnecting the sleeve from the air intake.

- When re-assmbling, position the filtering element with its projecting pleated side facing downwards.

AIR FLOW METER

REMOVAL - INSTALLATION

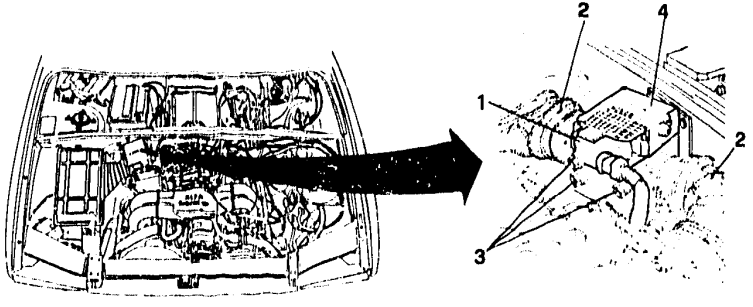

PA064Q201

- Disconnect the battery negative cable.
1. Disconnect the multi-pole connector from the air flow meter body.
2. Unloose the sleeve fixing clamps then disconnect the sleeves from the air flow meter
3. Unscrew the three screws and remove the air flow meter.
4. Should it be necessary to gain access to the electronic control unit, unscrew the four fixing screws and remove the cover from the air flow meter.

Check the correct operation of the air flow meter by pressing on the vane to verify its free rotation.

ADDITIONAL AIR SOLENOID VALVE

REPLACEMENT

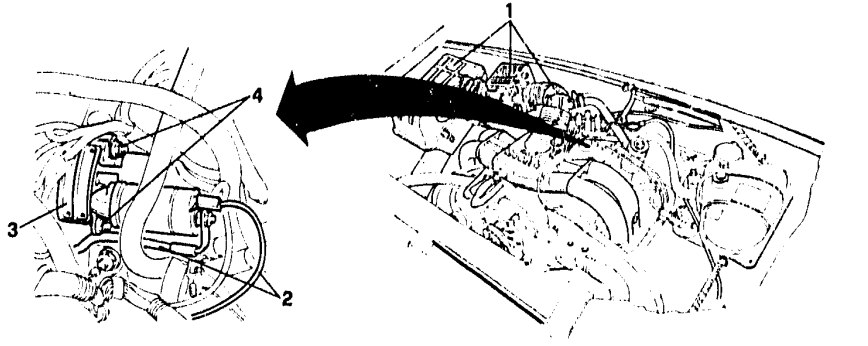

PA06RG201

- Disconnect the battery negative cable.
1. Remove the air filter cover, the air flow meter and the corrugated sleeve.
2. Disconnect the power supply and energizing cables from the starting motor.
3. Remove the plastic cover.
4. Unscrew the two bolts fixing the starting motor, then remove it.

ADDITIONAL AIR SOLENOID VALVE

REPLACEMENT (continued)

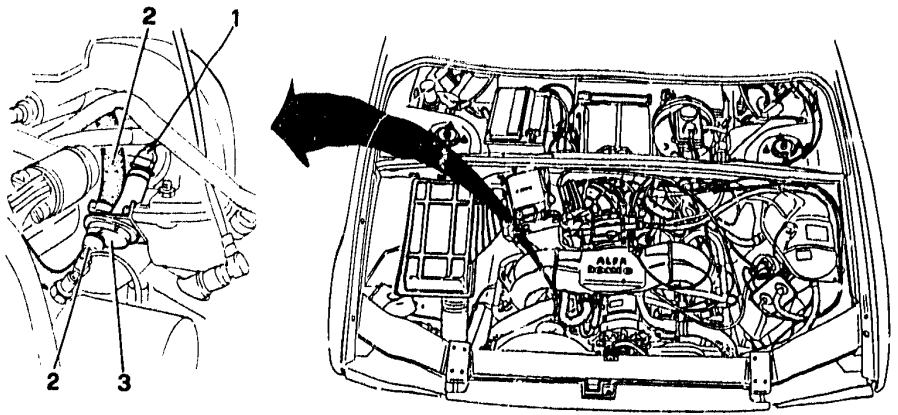

PB067Q201

1. Disconnect connector of solenoid valve command lead.
2. Loosen clamps and disconnect solenoid valve pipes.
3. Unscrew fastening screws and remove air device.
- Reinstall a new auxiliary air device, reversing removal procedure.

ADDITIONAL AIR SOLENOID VALVE (continued)

CHECKS AND INSPECTIONS

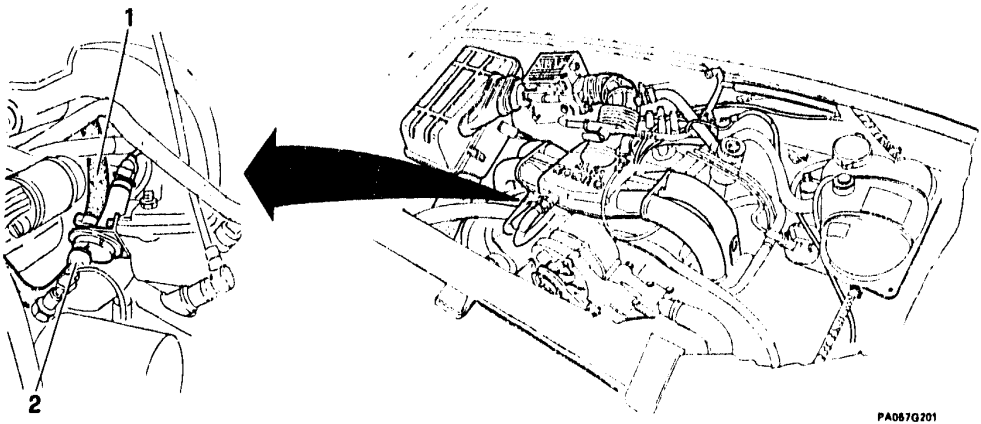

1. With cold engine, start up the engine then block the air flow by repeatedly squeezing the solenoid valve outlet tube.
   - Check that the engine r.p.m. decreases sharply at first and then more slowly as time passes.
2. Also check that, with the engine at its operating temperature, by squeezing the solenoid valve outlet tube, the engine r.p.m. does not decrease.

THROTTLE VALVE BODY
REMOVAL - INSTALLATION

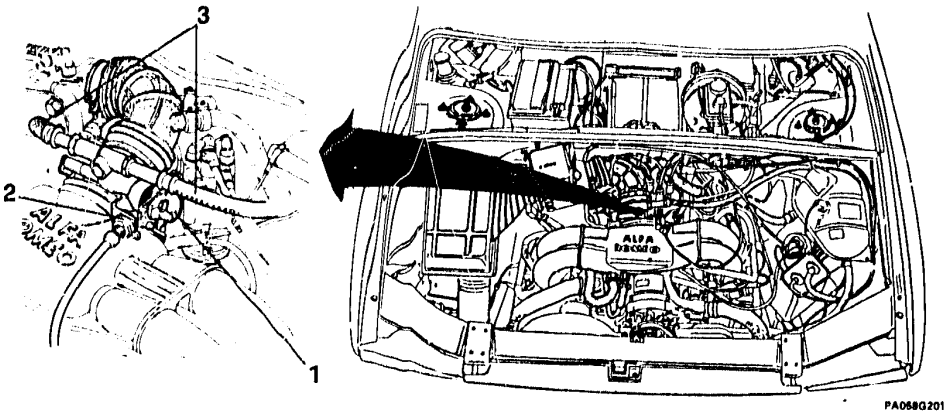

PA058G201

1. Rotate the accelerator control lever and withdraw the control cable pawl.
2. Remove the retaining ring and withdraw the sheath end from the bracket.
3. Unloose the clamps and disconnect the tubes from the throttle body.

THROTTLE VALVE BODY

REMOVAL - INSTALLATION (continued)

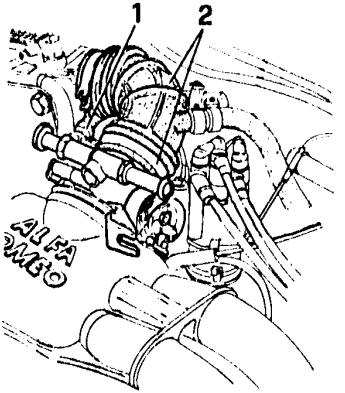

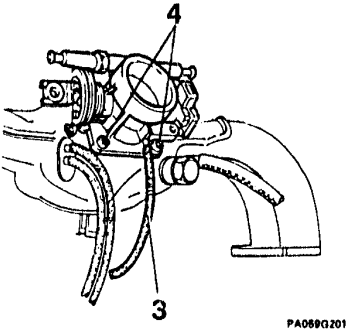

1. Disconnect the connector from the min and max throttle valve position switch.
2. Unloose the fixing clamp and remove the sleeve from the throttle valve body.
3. Disconnect the vacuum intake hose.
4. Unscrew the four fixing screws and remove the throttle valve body with its gasket.

- When re-assembling, insert a new gasket between throttle valve body and fuel supply manifold.

SUPPLY MANIFOLD
ASSY

1 Supply manifold
2 By-pass tube for idle speed adjustment
3 Additional air inlet tube
4 Power brake vacuum intake tube union
5 Gaskets
6 Throttle valve switch wiring
7 Cooling circuit breather pipe
8 Accelerator cable sheath fixing bracket
9 Throttle valve body-to-manifold fixing screw
10 Corrugated sleeve
11 Accelerator control cable
12 Snap ring
13 Accelerator cable sheath
14 Vacuum intake tube for ignition advance pneumatic adjuster
15 Throttle valve body
16 Gasket
17 Vacuum intake tube for fuel pressure regulator
18 Vacuum intake tube for carbon canister (only for models with catalytic converter)
19 Engine lifting bracket
20 Supply manifold fixing nut

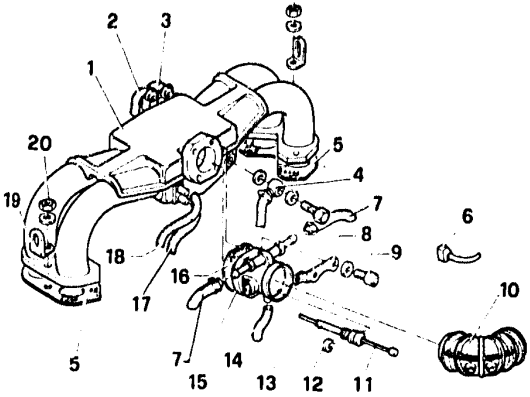

PA060G201

SUPPLY MANIFOLD (continued)
REMOVAL - INSTALLATION

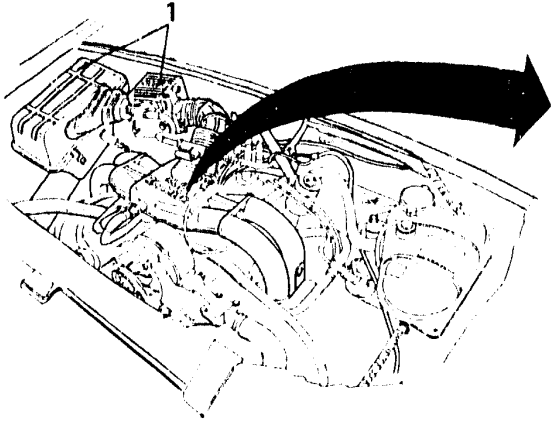

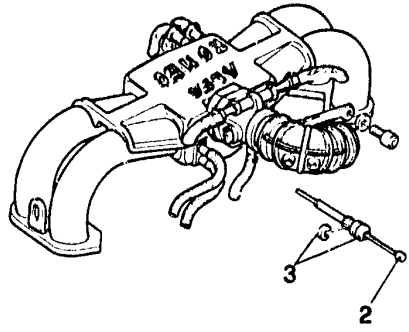

PA0810201

1. Remove the air filter cover and the air flow meter.
2. Rotate the accelerator control lever and release the pawl at the accelerator cable end.
3. Remove the snap ring and release the sheath from the bracket.
- Disconnect the throttle valve switch wiring.



REMOVAL - INSTALLATION (continued)

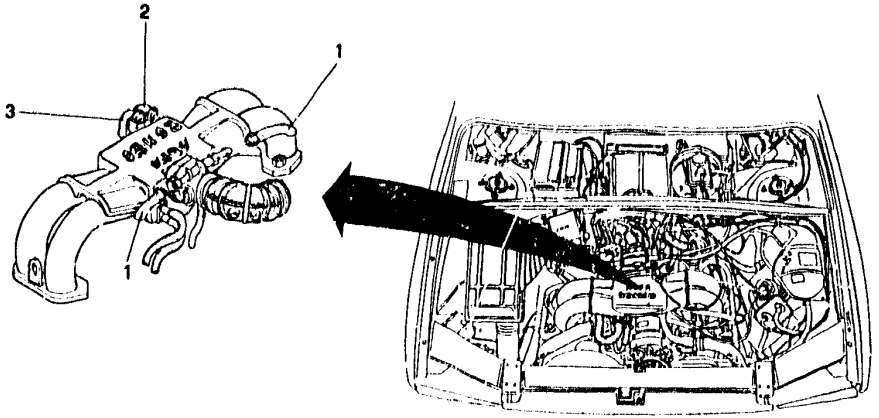

PA062G201

1. Disconnect the cooling circuit breather pipes from the throttle valve body.
2. Unloose the clamp and disconnect the additional air inlet tube from the manifold.
3. Unloose the clamp and disconnect the by-pass hose from the manifold.

REMOVAL - INSTALLATION (continued)

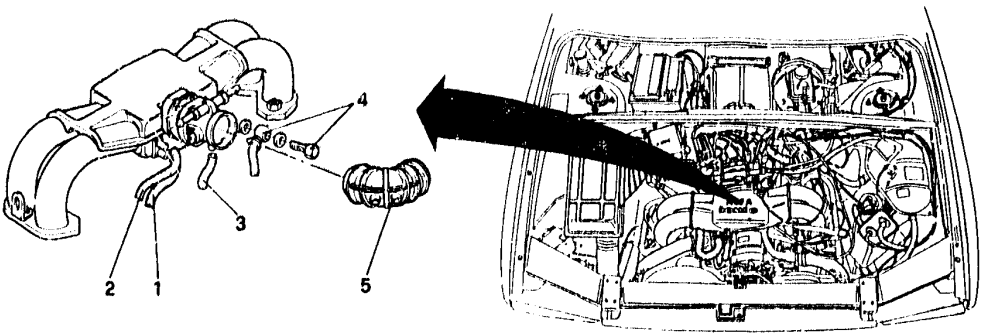

PA063G201

1. Disconnect the vacuum intake hose to the carbon canister(only for models with catalytic converter).
2. Disconnect the vacuum intake hose to the fuel pressure regulator.
3. Disconnect the vacuum intake hose to the ignition advance pneumatic regulator.
4. Unscrew the union and separate the power brake vacuum intake hose from the manifold.
5. Unloose the clamp and disconnect the corrugated sleeve from the throttle valve body.

REMOVAL - INSTALLATION (continued)

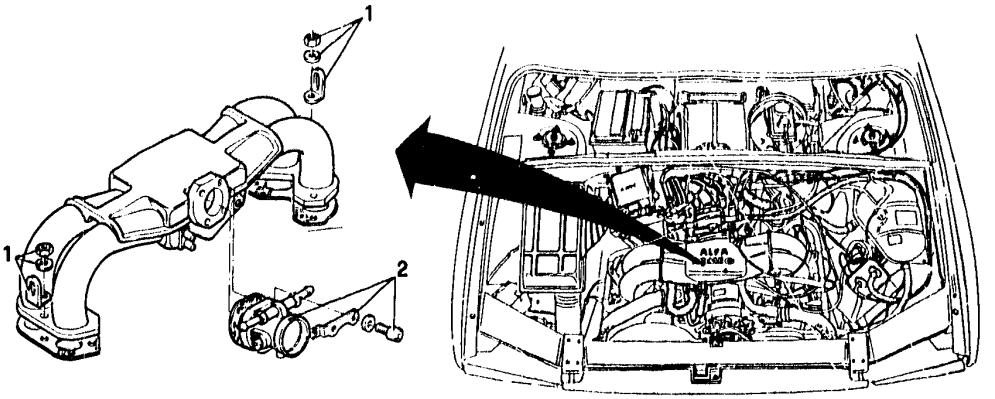

1. Unscrew the three nuts on both manifold ends, then remove the manifold with its gaskets.
2. Should it be necessary to separate the throttle valve body from the manifold, unscrew the four fixing screws.

- When re-assembling:
- Insert new gaskets between throttle valve body - manifold and between manifold - ducts on cylinder heads.
- Check the accelerator cable and adjust if necessary (see CHECKS AND ADJUSTMENTS).
- Perform a check and relevant adjustment of the engine idle r.p.m. (see **GR. 00**).

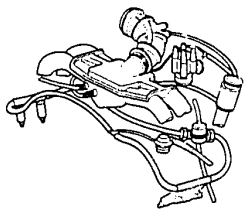

ELECTRONIC INJECTION ENGINES (LE3 - Jetronic)

FUEL SUPPLY CIRCUIT

FUEL SUPPLY CIRCUIT

ASSY ..... 04 - 66
FUEL TANK ..... 04 - 67
Removal - Installation ..... 04 - 67
Disassembly - Reassembly ..... 04 - 69
CHECKS AND INSPECTIONS ..... 04 - 70
FUEL PUMP ..... 04 - 71
Removal - Installation ..... 04 - 71
PULSE DAMPER ..... 04 - 72
Removal - Installation ..... 04 - 72
ELECTROINJECTORS ..... 04 - 73
Removal - Installation ..... 04 - 73
PRESSURE REGULATOR ..... 04 - 74
Removal - Installation ..... 04 - 74
FUEL FILTER REPLACEMENT ..... 04 - 75

FUEL SUPPLY CIRCUIT

ASSY

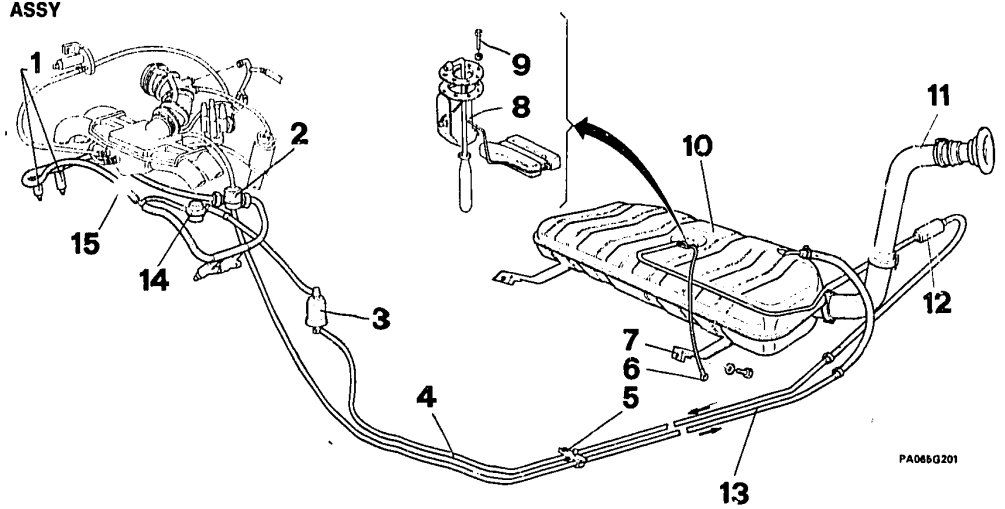

1 Electroinjectors
2 Fuel pressure regulator
3 Fuel filter
4 Fuel delivery pipe
5 Pipe holding clamp
6 Ground cable
7 Fuel tank strap
8 Float assy
9 Float fixing screws
10 Fuel tank
11 Filler neck
12 Fuel pump
13 Exceeding fuel return pipe
14 Pulse damper
15 Fuel distributor manifold

FUEL SUPPLY CIRCUIT (continued)

FUEL TANK

Removal - Installation

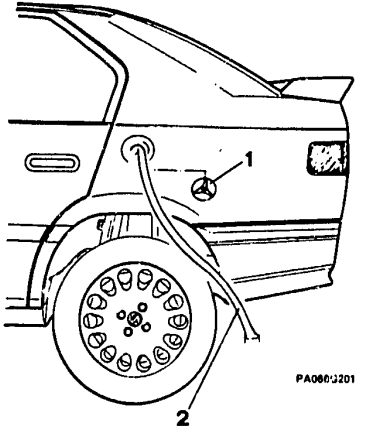

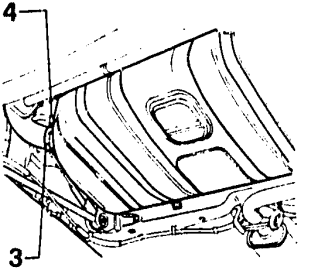

- Disconnect the battery negative cable.
1. Remove the cap from the fuel tank filler neck.
2. Suck out all the petrol by means of a suitable pump.
3. Unloose the clamp fixing the fuel filling sleeve to the fuel tank.
4. Unloose the connecting clamp of the fuel supply pipe to the hose.

⇩

FUEL TANK

Removal - Installation (Continued)

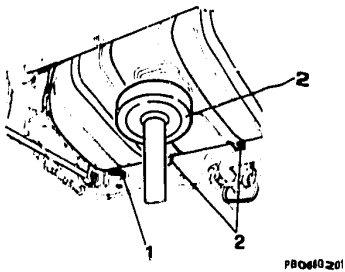

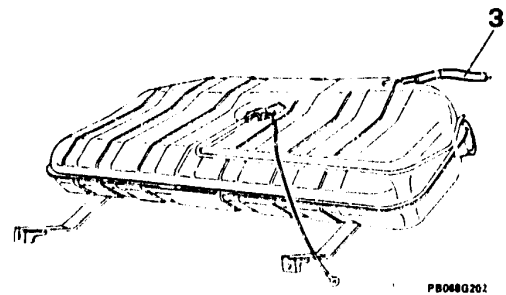

1. Unscrew and remove screw fastening the earth lead to the car body.
2. Support the fuel tank, using a column-type jack and unscrew the screws securing the two supporting straps to the car body.

- Lower the jack slightly.

3. Remove the excess fuel return pipe.

- Remove fuel tank by lowering the jack.
- If necessary, remove the fuel supply piping by loosening the clamps and uncoupling them from the supporting grips.

FUEL TANK (Continued)
Disassembly - Reassembly

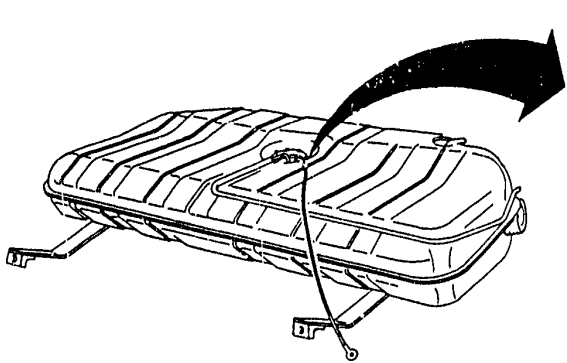

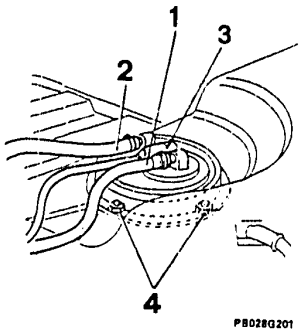

1. Disconnect the fuel delivery pipe from the filler neck on the float.
2. Disconnect the fuel return pipe from the filler neck on the float.
3. Disconnect the electrical wiring from the float.
4. Unscrew the six screws securing the float to the tank, then remove the float with its gasket.

- When reassembling, replace the gasket with a new one.

FUEL SUPPLY CIRCUIT (continued)

CHECKS AND INSPECTIONS

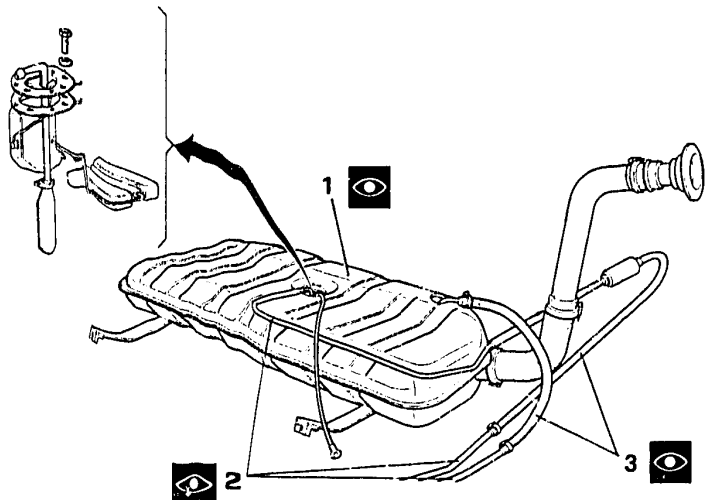

1. Check the fuel tank for integrity.
2. Checks that the pipes are not oxidized, clogged or dented.
3. Check that the hoses are not porous and do not show traces of wear.

FUEL SUPPLY CIRCUIT (continued)

FUEL PUMP

Removal - Installation

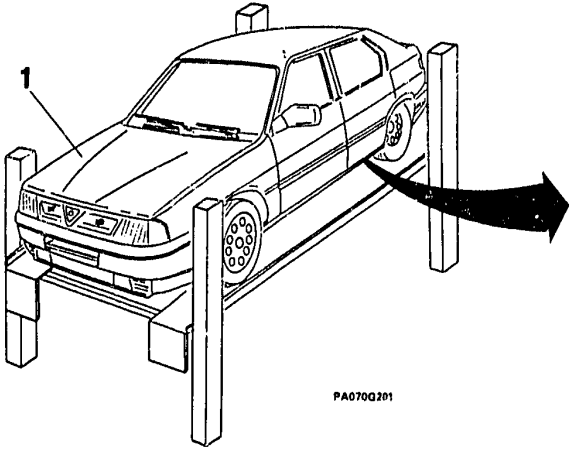

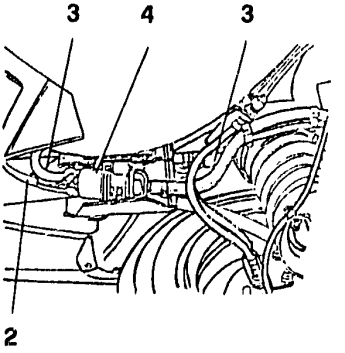

1. Place the vehicle on a lift platform and disconnect the batteyr negative cable.
2. By operating under the vehicle, disconnect the fuel pump power supply cables.
3. Block the fuel inlet and outlet pipes by means of pliers and disconnect the pipes after having slackened the clamps.
4. Unloose the clamp and remove the pump.

FUEL SUPPLY CIRCUIT (continued)

PULSE DAMPER

Removal - Installation

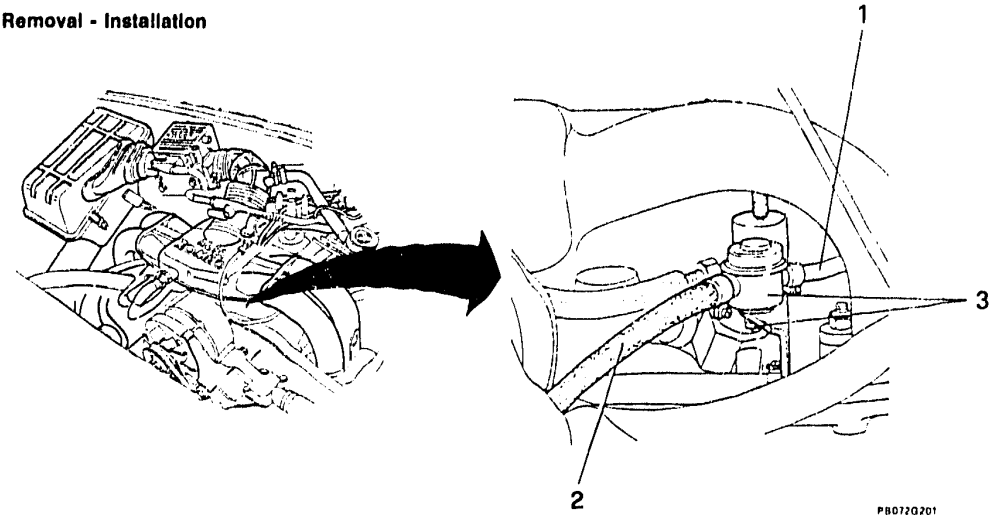

1. Unloose the clamp and disconnect the fuel inlet pipe from the damper.
2. Unloose the clamp and disconnect the outlet pipe from the damper.
3. Unscrew the fixing nut and remove the damper from its supporting bracket.

FUEL SUPPLY CIRCUIT (continued)

ELECTROINJECTORS

Removal - Installation

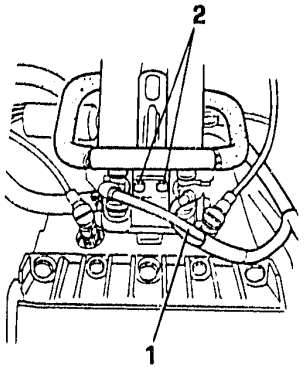

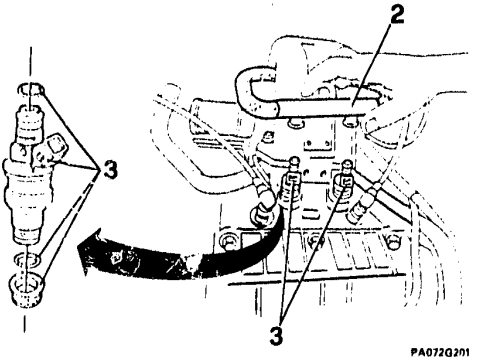

- Disconnect the battery negative cable.
1. Disconnect the power supply wiring connectors from the electroinjectors.
2. Unscrew the fixing screws and lift the fuel distributor manifold by releasing it from the electroinjectors.
3. Remove the electroinjectors complete with O-rings and gaskets.
- When assembling, renew the O-rings and the gaskets.

FUEL SUPPLY CIRCUIT (continued)

PRESSURE REGULATOR

Removal - Installation

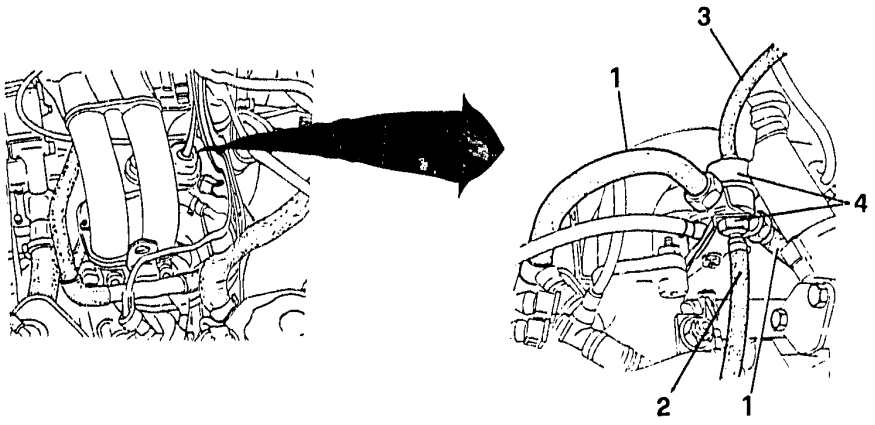

Operate with caution: the fuel supply circuit may be under pressure.

1. Detach the two connection unions of the fuel distributor manifold to the pressure regulator.
2. Disconnect the exceeding fuel return tube.
3. Disconnect the vacuum intake hose from the regulator.
4. Unscrew the nut and remove the pressure regulator.

FUEL SUPPLY CIRCUIT (continued)

FUEL FILTER REPLACEMENT

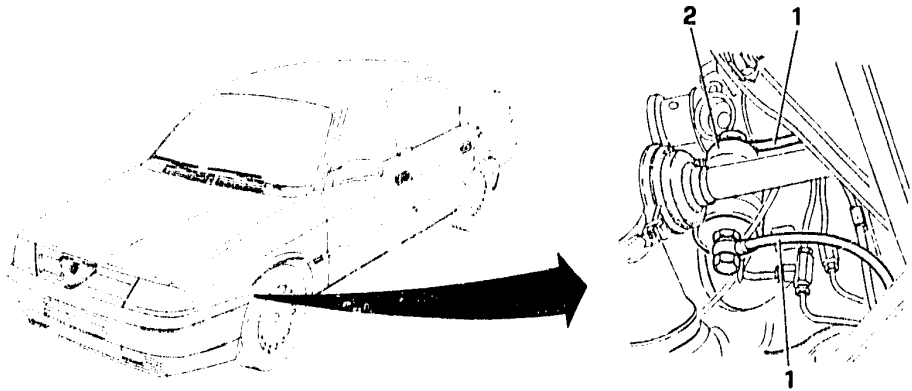

1. Unscrew the unions of the fuel delivery and arrival hoses and recover the gaskets.

Suitably plug the unions to prevent fuel leakages.

2. Unloose the clamp and remove the filter.

Install the new filter by paying attention that the arrow engraved on the filter body must be pointing in the fuel delivery direction.

- Complete the filter re-assembly by reversing the removal operations.

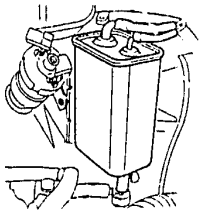

ELECTRONIC INJECTION ENGINES (LE3 - Jetronic)

FUEL VAPOUR EMISSION CONTROL SYSTEM

CHECKS AND ADJUSTMENTS

FUEL VAPOUR EMISSION CONTROL SYSTEM (Specific for vehicle with catalytic converter) ..... 04 - 76
DESCRIPTION ..... 04 - 77
FUEL VAPOUR SEPARATOR ..... 04 - 79
Removal - Installation ..... 04 - 79
COMPENSATING VALVE ..... 04 - 80
Removal - Installation ..... 04 - 80
BLOW-OFF VALVE ..... 04 - 81
Removal - Installation ..... 04 - 81
FUEL VAPOUR FILTER ..... 04 - 82
Removal - Installation ..... 04 - 82
CHECKS AND ADJUSTMENTS ..... 04 - 83
AIR FLOW RATE TEST ..... 04 - 83

FUEL VAPOUR EMISSION CONTROL SYSTEM
(Specific for vehicles with catalytic converter)

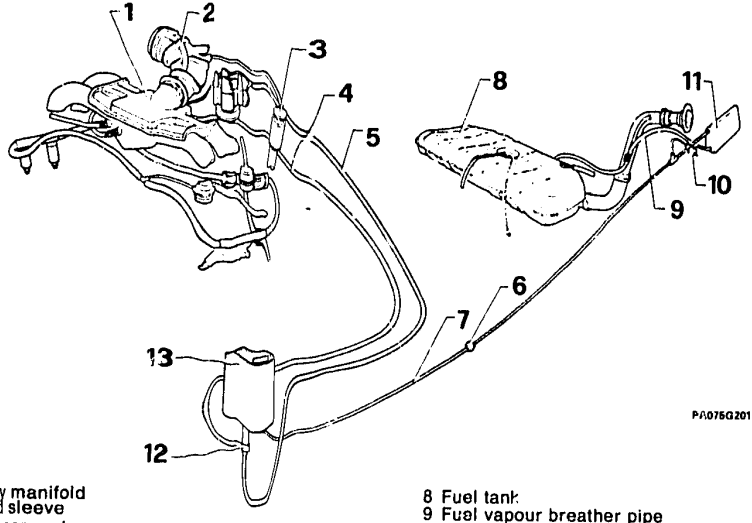

1 Fuel supply manifold
2 Corrugated sleeve
3 Oil vapour separator
4 Fuel vapour intake pipe
5 Vacuum intake pipe
6 Check valve
7 Fuel vapour recycling pipe
8 Fuel tank
9 Fuel vapour breather pipe
10 Compensating valve
11 Fuel vapour separator
12 Bleed valve (fuel vapour flow check)
13 Fuel vapour carbon (canister)

DESCRIPTION

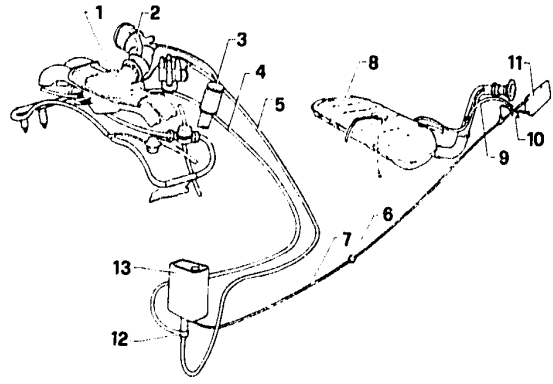

The fuel vapours exuded by the fuel tank **8** are collected, through a special piping **9**, in a vapour-liquid separator **11** which, thanks to its structure, allows the condensed fuel to return to the fuel tank.

To prevent fuel vapour emission into the atmosphere, a fuel tank sealed cap has been designed.

The fuel vapours from separator **11** are sent to the fuel vapour carbon canister, through the upper outlet **13**.

A check valve **6** is installed on the piping **7** between the separator **11** and the fuel vapour carbon canister **13** the purpose of which is to prevent fuel leakages in the case of vehicle overturning.

The vapour flow is controlled by a valve **12** which allows or blocks the vapour flow to manifold **1** in relation to the vacuum pressure present upstream the throttle valve body.

Whenever the vacuum presseure is lower than the prescribed value (for example with engine turned off or idling) the bleed valve is closed to block the vapour flow to the manifold **1**. In any other case (engine start up in normal conditions) the valve is opened thus allowing the vapours to flow into the manifold **1**.

Due to the pressure difference existing inside the carbon canister, the carbons are "washed" by the air stream.

DESCRIPTION (continued)

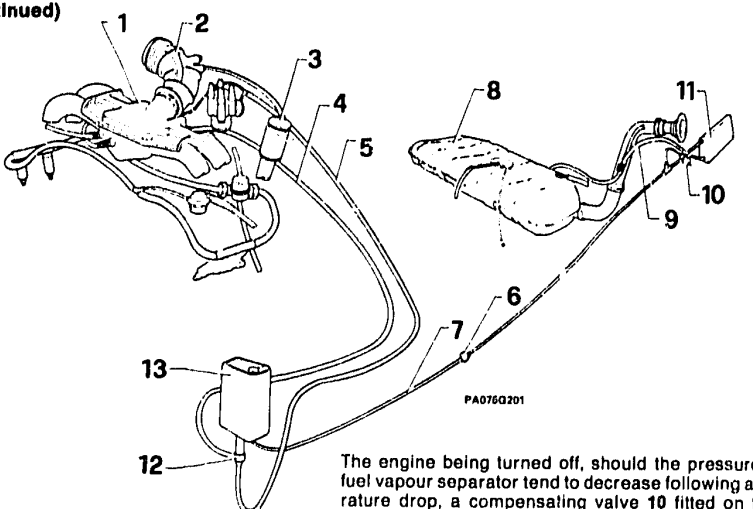

The vacuum pressure is taken upstream and downstream the throttle valve body.
During the "washing" action, the fuel vapours are mixed with the outside air and sent to the supply manifold where are added to the engine supply air.

The engine being turned off, should the pressure in the fuel vapour separator tend to decrease following a temperature drop, a compensating valve **10** fitted on the fuel vapour recycling piping **7** between separator **11** and carbon canister **13**, allows the outside air to enter the circuit, thus keeping the system at the atmospheric pressure.
The bleed valve **12** is fitted with an inner spring set to open in the case of excessive vapour pressure in the fuel tank. In this case the fuel vapours will be directly sent to the carbon canister **13** and fixed on the actived carbon inside the filter.

FUEL VAPOUR SEPARATOR

Removal - Installation

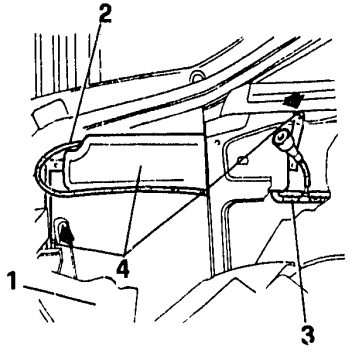

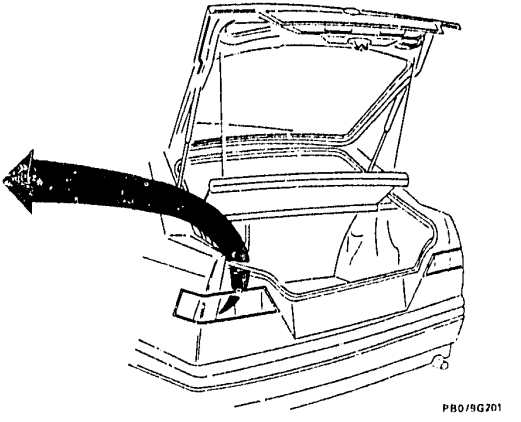

1. Move aside the side trimming of the boot.
2. Unloose the clamp and disconnect the fuel vapour recycling pipe from the separator.
3. Unloose the clamp and disconnect the breather pipe from the separator.
4. Unscrew the two fixing nuts and remove the separator.

- Should it be necessary to clean the separator before the re-assembly, blow compressed air in the inside.

COMPENSATING VALVE

Removal - Installation

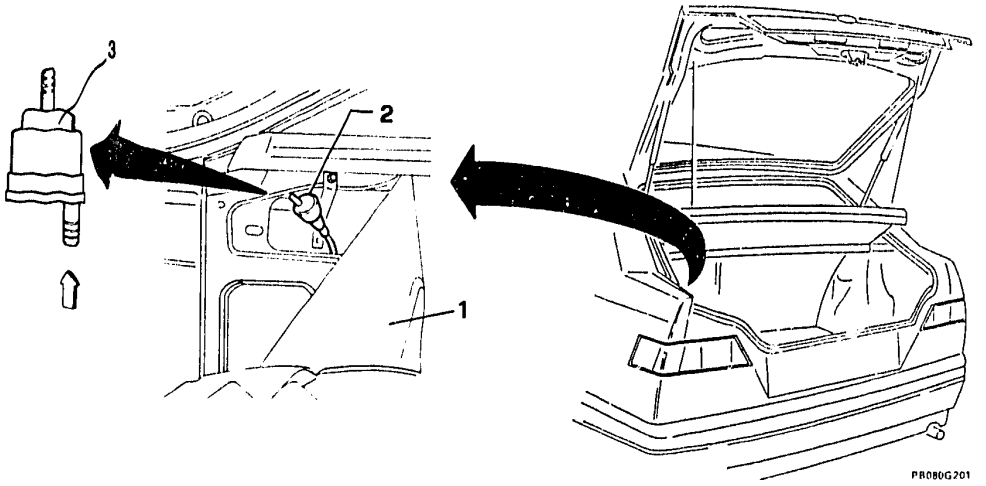

1. Slightly move apart the left-side trimming of the boot.
2. Disconnect the valve from the fuel vapour recycling pipe.
3. Check the valve correct operation, which means that the air flow must be allowed in the indicated direction only.
   Otherwise replace the compensating valve.

BLOW-OFF VALVE

Removal - Installation

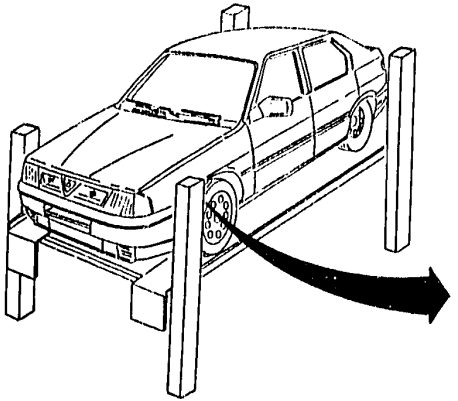

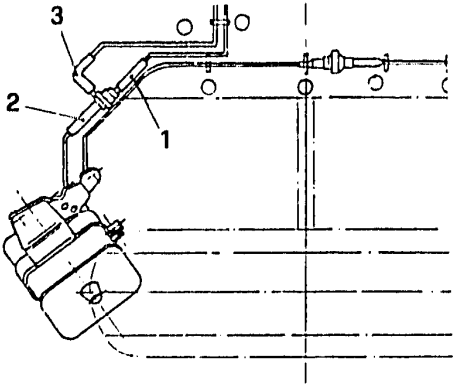

- Place the vehicle on a lift and raise it.
1. Working from underneath the vehicle, disconnect the vacuum intake hose from the blow-off valve.
2. Disconnect the fuel vapour hose (attached to the filter) from the blow-off valve.
3. Disconnect the fuel vapour delivery hose from the blow-off valve and remove it.

FUEL VAPOUR FILTER
Removal - Installation

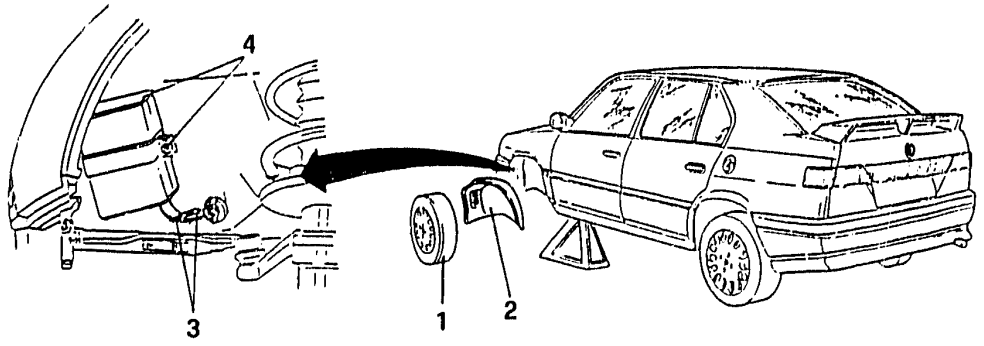

1. Remove the front left-hand wheel.
2. Remove the wheel housing.
3. Disconnect the vapour inlet and outlet hoses from the fuel vapour filter.
4. Loosen the screw of the clamp and remove the fuel vapour filter.

CHECKS AND ADJUSTMENTS

AIR FLOW RATE TEST

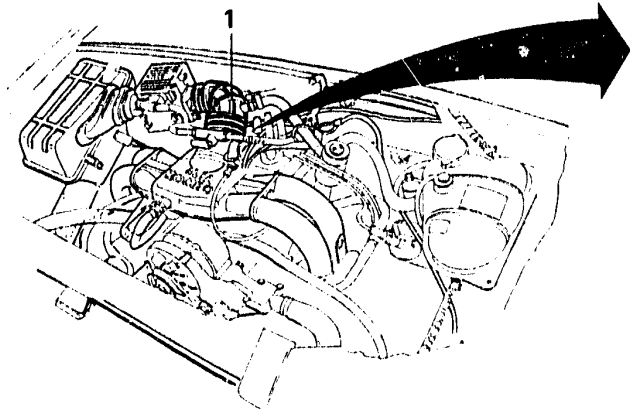

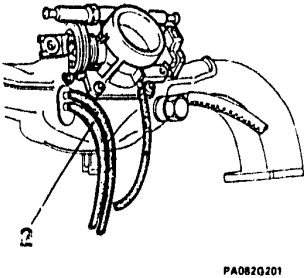

1. Unloose the clamp and disconnect the corrugated sleeve from the throttle valve body.
2. Disconnect the vacuum intake pipe and plug the relevant union.

CHECKS AND ADJUSTMENTS

AIR FLOW RATE TEST (continued)

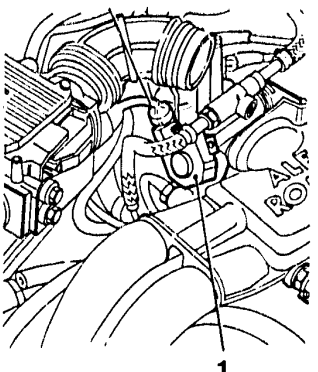

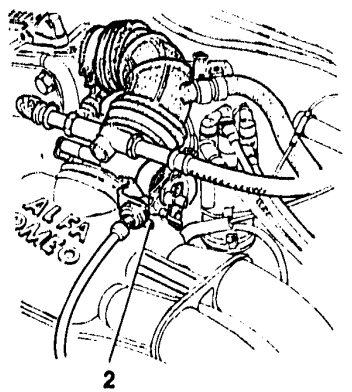

1. Unloose the switch fixing screws on the throttle valve body.
2. Disconnect the accelerator control cable.

CHECKS AND ADJUSTMENTS

AIR FLOW RATE TEST (continued)

Throttle air leakage with accelerator in closed position (Solex flowmeter)
400 ± 10 on N scale

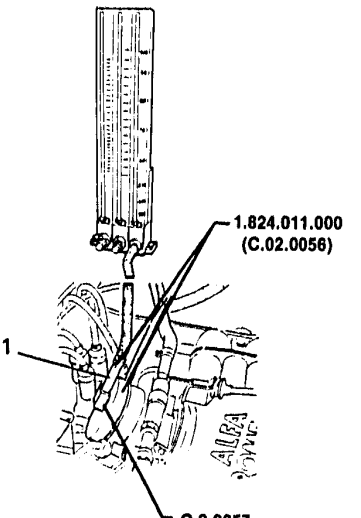

PA084G201

1. Connect the flowmeter to pad No. 1.824.011.000 (C.2.0056) complete with union C.2.0057 and connect them to the throttle valve body.

- Measure the air flow passing through the throttle valve and check if the detected value ranges within the prescribed ones.

CHECKS AND ADJUSTMENTS

AIR FLOW RATE TEST (continued)

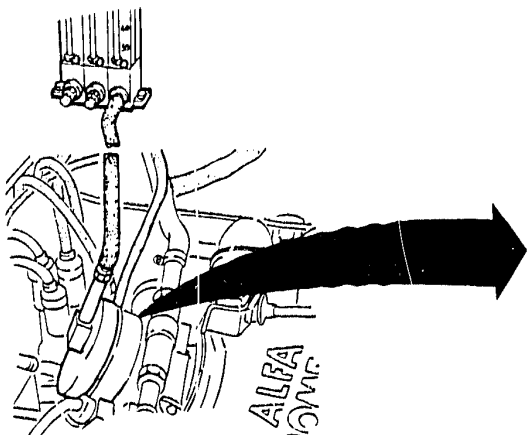

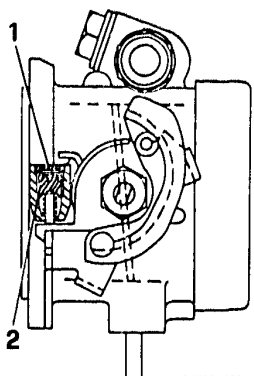

- In the case of incorrect values, proceed to the adjustment.

1. Break the seal.
2. Act on the adjusting screw till obtaining the prescribed air flow value.

- Seal the adjusting screw with its special plug, then refit the previously disconnected components.

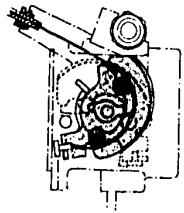

ELECTRONIC INJECTION ENGINES (LE3 - Jetronic)

CHECKS AND ADJUSTMENTS (continued)

ELECTRIC/ELECTRONIC COMPONENTS

CHECKS AND ADJUSTMENTS

THROTTLE VALVE SWITCH ..... 04 - 87
ACCELERATOR CONTROL ..... 04 - 88
FUEL VAPOUR EMISSION CONTROL SYSTEM TIGHTNESS CHECK ..... 04 - 89
FUEL SUPPLY PRESSURE CHECK AND CIRCUIT TIGHTNESS CHECK ..... 04 - 91
CHECKING AND ADJUSTING THE IDLE SPEED ..... 04 - 93
CHECKING AND ADJUSTING THE EXHAUST GAS EMISSIONS (For models without catalytic converter) ..... 04 - 94
CHECKING AND ADJUSTING THE EXHAUST EMISSIONS (For models with catalytic converter) ..... 04 - 96
Sampling downstream of the catalytic converter .... 04 - 96
Sampling upstream of the catalytic converter ..... 04 - 98
Alternative solution ..... 04 - 100

ELECTRIC/ELECTRONIC COMPONENTS

ELECTRONIC CONTROL UNIT ..... 04 - 101
THROTTLE VALVE SWITCH ..... 04 - 102

CHECKS AND ADJUSTMENTS (continued)

THROTTLE VALVE SWITCH

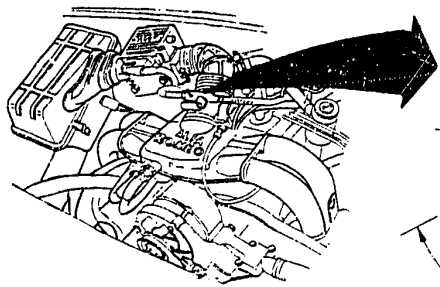

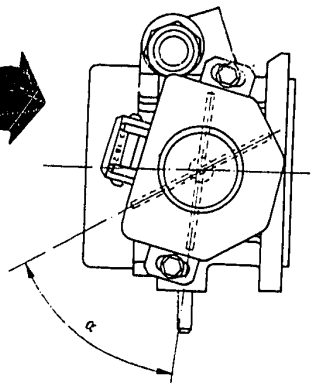

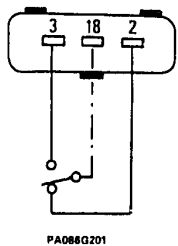

Before carrying out the following calibration, make sure the throttle valve is correctly adjusted

- Unplug the connection from the throttle valve min. and max. opening switch.
- Apply the multimeter probes to the leads **2** **18** and check for continuity **(0 Ω)** when the throttle opening angle ranges within **0°** (complete closure) and **1°**. When the opening angle exceeds **1°**, the circuit opens and the multimeter reading will be resistance ∞.

NOTE: Otherwise, unloose the two fixing screws and rotate the switch till restoring the correct position.

- Completely rotate the throttle valve to an angle α **60° ± 4°** and apply the multimeter probes to the leads **3** and **18**; the multimeter reading shall indicate electric continuity. **(0 Ω)**.

NOTE: Otherwise, check the accelerator control or replace the throttle valve switch.

CHECKS AND ADJUSTMENTS (continued)

ACCELERATOR CONTROL

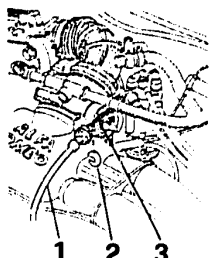

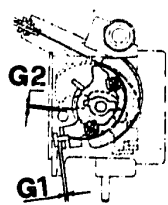

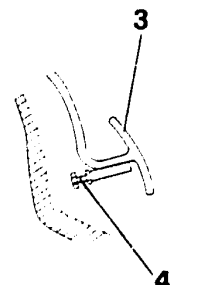

PA08CG201

Cable end float	G1 = 1 ÷ 2 mm
Throttle valve max. opening	G2 = 1 ÷ 2 mm

1. Check that the accelerator control cables runs freely in its sheath.
- With the accelerator pedal released, check that the relevant cable on the control lever features the prescribed end float **G1**
2. Should it be necessary, proceed to the cable end float adjustment by removing the adjusting ring, then restore the prescribed end float, finally refit the adjusting ring in the new position.
3. With the accelerator pedal fully pressed, check that the accelerator control cam can still rotate by **G2**.
4. If necessary, proceed to the adjustment by acting on the pedal limit stop screw.

CHECKS AND ADJUSTMENTS (continued)

FUEL VAPOUR EMISSION CONTROL SYSTEM TIGHTNESS CHECK

For a tightness check, make use of the equipment No. 1.824 .013.000 (C.2.0126) (already existing) and No. 1.824.020.000 (C.4.0101) composed of pressure gauge (A), needle adjsuting valve (B) and "T" union pipes T" (C):

- Fully tighten the cocks of the pressure reducer N° 1.824.013.000 (C.2.0126) and valve B.

1. Connect the union of the equipment No. 1.824.013.000 (C.2.0126) to a compressed air source.
2. Connect pipe C to the air inlet valve, placed in the boot compartment.
3. By acting on pressure roducer No. 1.824.013.000 (C.2.0126) decrease the system pressure to approx. 0.2 bar (20 kPa).
4. Slightly open the valve B.
5. Act on reducer No. 1.824.013.000 (C.2.0126) to adjust the fuel vapour system pressure to the value of 0.025 bar (2,49 kPa) corresponding to 250 mm on the pressure gauge graduated column A.

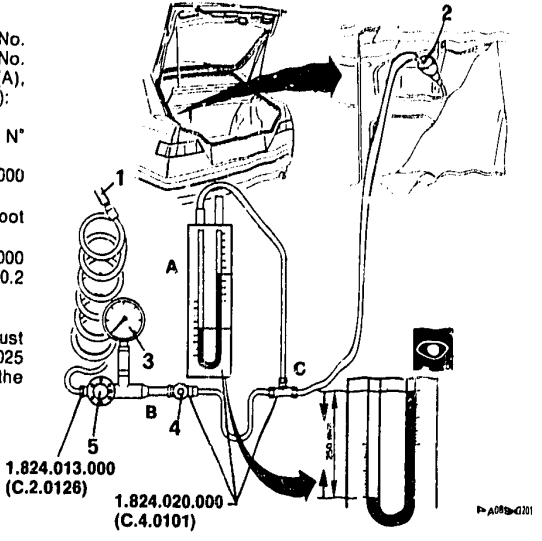

FUEL VAPOUR EMISSION CONTROL SYSTEM TIGHTNESS CHECK (continued)

1. Wait for approx. 2 minutes and tighten valve B, thus settling the circuit pressure to the above-mentioned value.
2. Measure the pressure drop in the system, which should not exceed, in 10 minutes, the value of 0.0012 bar (0.12 kPa), corresponding to 12 mm on the pressure gauge column.

- If the pressure drop exceeds the prescribed value, localize the leakages by spraying soaped water on the union and connection points of the circuit: air bubbles will denounce the presence of leakages.
- If necessary, replace the faulty components and repeat the check.

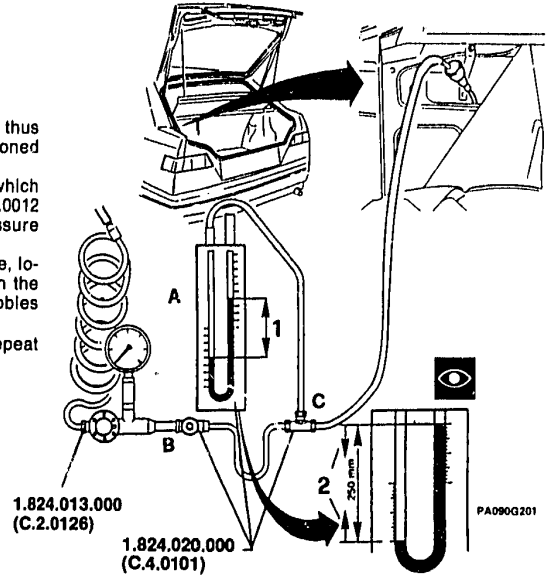

CHECKS AND ADJUSTMENTS (continued)

FUEL SUPPLY PRESSURE CHECK AND CIRCUIT TIGHTNESS CHECK

Fuel pressure
280 ÷ 320 kPa (2.8 ÷ 3.2 bar; 2.9 ÷ 3.3 Kg/cm2)

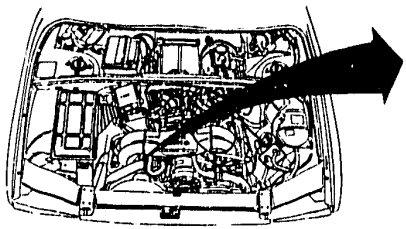

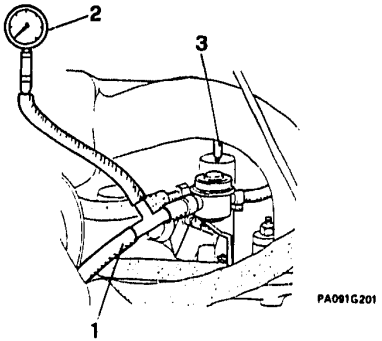

1. Disconnect the fuel delivery pipe downstream the pulse damper.
2. Connect a pressure gauge, by means of a "T" adapter, between the pulse damper and the previously disconnected pipe.
3. Detach the tube from the pressure regulator. This is to avoid that possible irregularity of the engine idle speed, may cause irregular readings.

- Start up the engine; at idle speed check that the pressure value is the prescribed one.
- Re-connect the tube to the pressure regulator; at idle speed, the fuel pressure must decrease of approx. 0.5 bar and then increase again when the throttle valve opens.If this does not occur, troubleshoot any possible leakage in the vacuum pipe.

FUEL SUPPLY PRESSURE CHECK AND CIRCUIT TIGHTNESS CHECK (continued)

Max. check pressure
400 kPa (4 bar; 4.1 Kg/cm²)

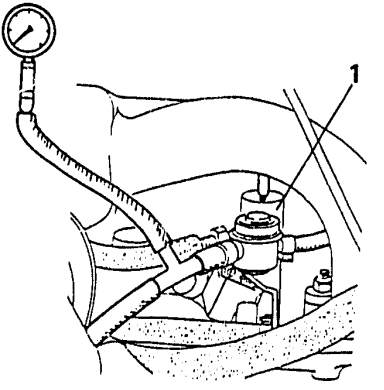

PA092Q201

1. By keeping the pressure gauge connected, and the engine at idle speed, squeeze the delivery pipe immediately downstream the pressure regulator, measuring the pressure increase up to the max. check pressure(avoid that pressure exceeds this value).
   - At a pressure of 2.5 bar, check that the fuel supply unions and pipes do not show the presence of leakages.
   - If the fuel pressure does not reach the above value and no leaks have been discovered, check the filter and/or the fuel pump.

CHECKS AND ADJUSTMENTS (continued)

CHECKING AND ADJUSTING THE IDLE SPEED

- Connect a rev counter to the engine.
- Connect the toxic gas extractor to the end of the exhaust pipe.
- Start the engine and run it until it reaches normal operating temperature (engine oil temperature: 75 - 80°C).
- With the gearbox in neutral and all users and the electric fan switched off check that the engine idle speed is within the specified limits.

Idle speed	
Models without catalytic converter	800 - 900 r.p.m.
Models with catalytic converter	900 - 1050 r.p.m.

- If the correct values are not obtained, adjust the idle speed as follows:

1. Loosen the counter nut and rotate the screw until the correct engine r.p.m. is obtained.

- Lock the counter nut.

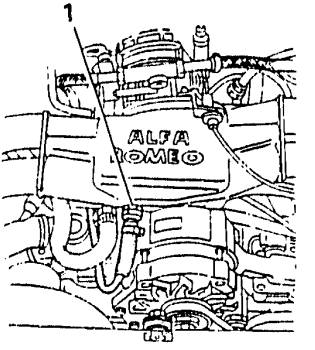

CHECKS AND ADJUSTMENTS (continued)

CHECKING AND ADJUSTING THE EXHAUST GAS EMISSIONS

For models without catalytic converter

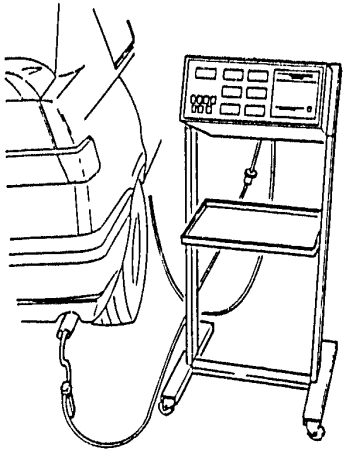

Start the workshop toxic gas extractor, start the engine on the vehicle and run it until it reaches normal operating temperature.

- Using a suitable exhaust gas analyzer and with the engine at idle speed, check that the percentage of CO leaving the end of the exhaust pipe is within the specified limits.

permitted %CO in volume	0.7 - 1.7

CHECKING AND ADJUSTING THE EXHAUST GAS EMISSIONS

For models without catalytic converter (continued)

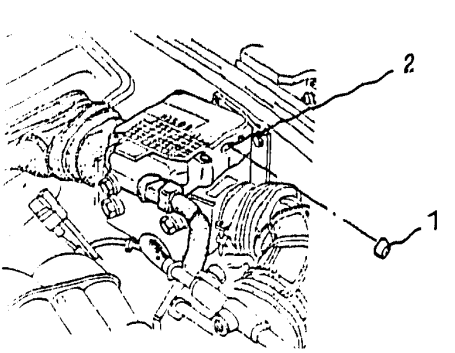

- If the percentage of CO is above the permitted limits, proceed as follows:

1. Remove the seal cap.
2. Carefully adjust the regulation screw until the specified values are obtained.

- When the operation has been completed, install a new seal cap.
- Check that the idle speed is within the specified limits. If it is not within the limits, carry out the procedure given in the section "Checking idle speed"

The percentage of exhaust CO should be adjusted, when necessary, only when the air flow meter and/or the electronic control unit have been replaced.

CHECKING AND ADJUSTING THE EXHAUST EMISSIONS (continued)
For models with catalytic converter

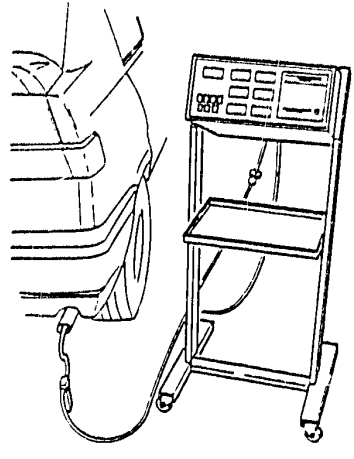

Sampling downstream of the catalytic converter.

Switch on the workshop toxic gas extractor, start the engine and run it until it reaches normal operating temperature.

- Using a suitable exhaust gas analyzer and with the engine at idle speed, check that the percentage of CO and the quantity of unburnt hydrocarbons (HC) leaving the exhaust pipe is below the specified limit.

permitted %CO in volume	≤ 0.5
HC	≤ 50 p.p.m.

CHECKING AND ADJUSTING THE EXHAUST EMISSIONS

For models with catalytic converter

Sampling downstream of the catalytic converter (continued)

- If the percentage of CO and HC is not within the permitted limits, proceed as follows:

1. Remove the seal cap.
2. Carefully adjust the regulation screw until the correct values are obtained.

- When the operation has been completed, install a new seal cap.
- Check that the idle speed is within the specified limits. If it is not within the limits, carry out the procedure given in the section "Checking idle speed"

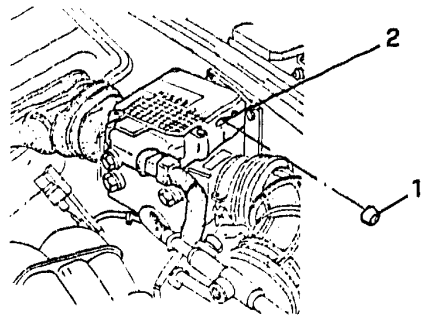

- The percentage of exhaust CO should be adjusted, when necessary, only when the air flow meter and/or the electronic control unit have been replaced.
- For vehicles destined for the Swiss market regulation of the exhaust emissions (CO%) is carried out during production and as a result the regulation screw is closed and cannot be adjusted.

CHECKING AND ADJUSTING THE EXHAUST EMISSIONS
For models with catalytic converter (continued)

Sampling upstream of the catalytic converter

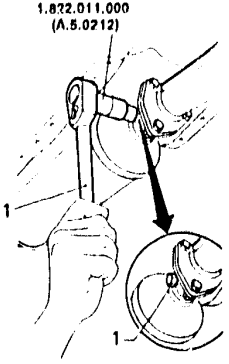

- Disconnect the wiring from the lambda probe.
1. Using spanner N° 1.822.011.000 (A.5.0212) unscrew the cap located at the entrance to the catalytic exhaust.
2. Install tool N° 1.824.007.000 (C.2.0051) on the union for exhaust gas sampling and connect it to the hose of the exhaust gas analyzer.

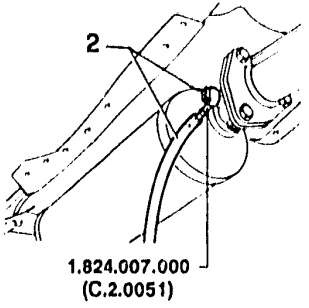

- Start the engine on the vehicle and check that the percentage of CO and the quantity of unburnt hydrocarbons at idle speed is below the permitted limit.

%CO in volume	0,6 - 10
HC	≤ 300 p.p.m.

CHECKING AND ADJUSTING THE EXHAUST EMISSIONS

For models with catalytic converter

Sampling upstream of the catalytic converter (continued)

- If the percentage of CO and HC is above the permitted limits, proceed as follows:

1. Remove the seal cap.
2. Carefully adjust the regulation screw until the specified values are obtained.

- When the operation has been completed, install a new seal cap.
- Check that the idle speed is within the specified values and if not, carry out the procedures given in the section "Checking idle speed".

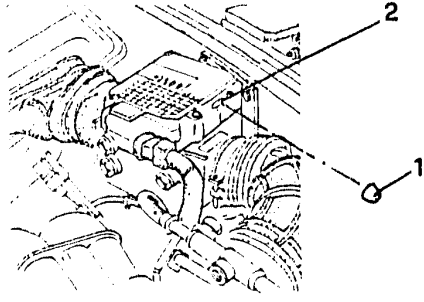

- The percentage of exhaust CO should be adjusted, when necessary, only when the air flow meter and/or the electronic control unit have been replaced.
- For vehicles destined for the Swiss market regulation of the exhaust emissions (CO%) is carried out during production and as a result the regulation screw is closed and cannot be adjusted.

CHECKING AND ADJUSTING THE EXHAUST EMISSIONS

For models with catalytic converter

Alternative solution

- This procedure has been simplified and is applicable to the engines that have a FIAT-TESTER socket fitted to the wiring system. Use the wiring shown in the diagram.
- Run the engine until it reaches normal operating temperature.

1. Remove the connector from the min/max switch device (wiring side).
2. Remove the three-way connector from the tool.

- Insert the connector of the tool in the three-way connector of the diagnostic apparatus.
- Check that the LED diode is working correctly and adjust the screw of the potentiometer located on the air flow meter in a sealed seating. The optimal conditions are obtained when the pulsations of the LED are the same for the "IGNITION" and "OUT" times. After checking this condition re-seal the "CO" screw seating.

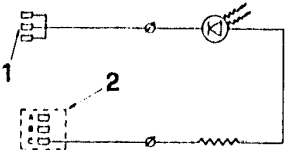

For vehicles destined for the Swiss market regulation of the exhaust emissions (CO%) is carried out during production and as a result the regulation screw is closed and cannot be adjusted.

ELECTRIC/ELECTRONIC COMPONENTS

ELECTRONIC CONTROL UNIT

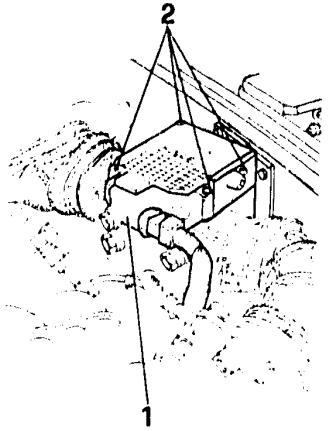

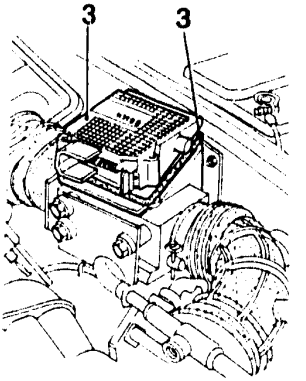

PA0930201

- Disconnect the negative cable from the battery.
1. Disconnect the multi-pole connector.
2. Loosen the four retaining screws one of which is located under the seal cap.
3. Remove the electronic contro unit and the sealing gasket.

- When re-assembling, fit a new seal plug, and in the case of control unit replacement, proceed to check and adjust the exhaust CO percentage.

ELECTRIC/ELECTRONIC COMPONENTS (continued)

THROTTLE VALVE SWITCH

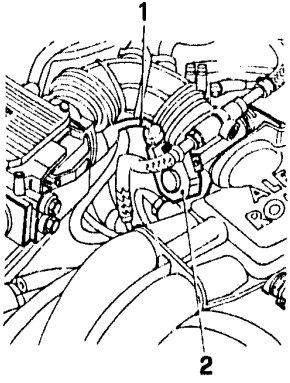

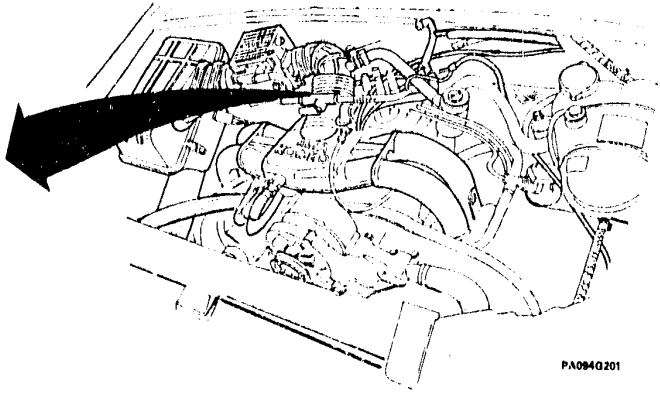

- Disconnect the negative cable from the battery.
1. Unplug the connector from the switch.
2. Unscrew the two fixing screws and remove the switch from the throttle valve body.

- After completing the re-assembly, adjust the throttle valve switch.

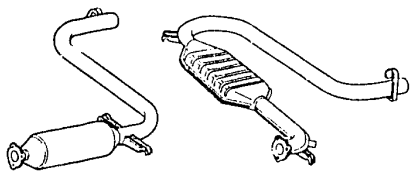

ELECTRONIC INJECTION ENGINES (LE3 - Jetronic)

EXHAUST SYSTEM

EXHAUST SYSTEM (For vehicles equipped with catalytic converter)

ASSY - 4x2 MODELS ..... 04 - 103
ASSY - 4x4 MODELS ..... 04 - 104
FRONT PART ..... 04 - 105
INTERMEDIATE PART ..... 04 - 106
REAR PART ..... 04 - 107
LAMBDA PROBE REPLACEMENT ..... 04 - 108

EXHAUST SYSTEM (For vehicles without catalytic converter)

ASSY - 4x2 MODELS ..... 04 - 109
ASSY - 4x4 MODELS ..... 04 - 110
FRONT PART ..... 04 - 111
INTERMEDIATE PART ..... 04 - 112
REAR PART ..... 04 - 113

EXHAUST SYSTEM (for vehicles equipped with catalytic converter)

ASSY - 4x2 MODELS

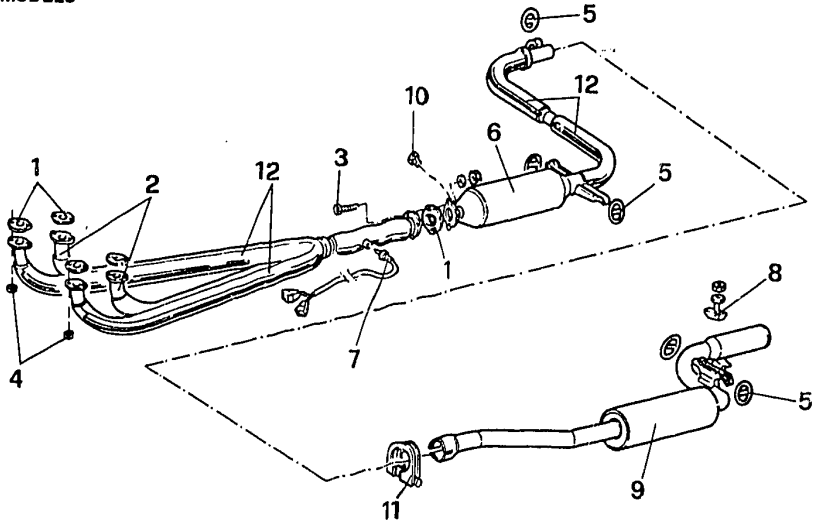

1 Gaskets
2 Manifolds - front part
3 Bolt
4 Manifold-to-cylinder heads fixing nuts
5 Rubber supporting ring
6 Catalytic muffler - central part
7 Lambda probe
8 Buffer
9 Rear part silencer
10 Cap for exhaust gas intake seating
11 Clamp
12 Heat shielding

EXHAUST SYSTEM (for vehicles equipped with catalytic converter) (continued)

ASSY - 4x4 MODELS

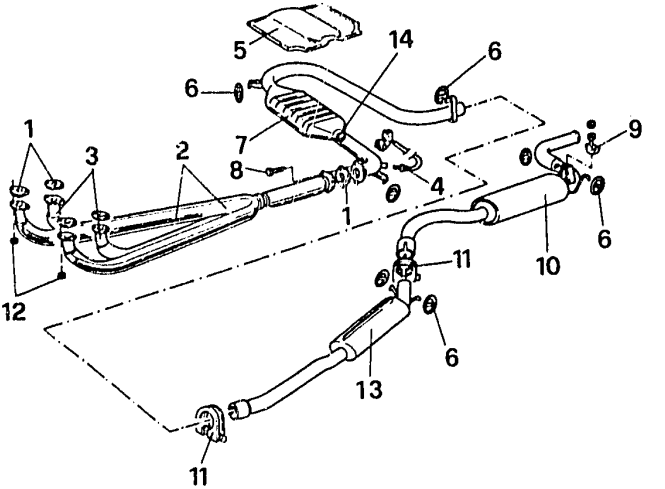

1 Gasket
2 Protection
3 Manifolds - front part
4 Lambda probe
5 Heat guard
6 Rubber supporting ring
7 Catalytic muffler - central part
8 Bolt
9 Buffer
10 Rear silencer
11 Clamp
12 Manifold-to-cylinder head fixing nut
13 Central silencer
14 Cap for exhaust gas intake seating

EXHAUST SYSTEM (For vehicles with catalytic converter) (continued)

FRONT PART

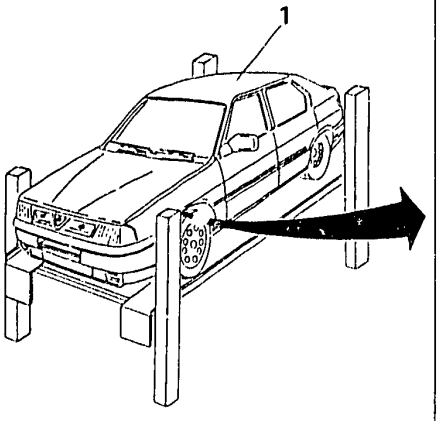

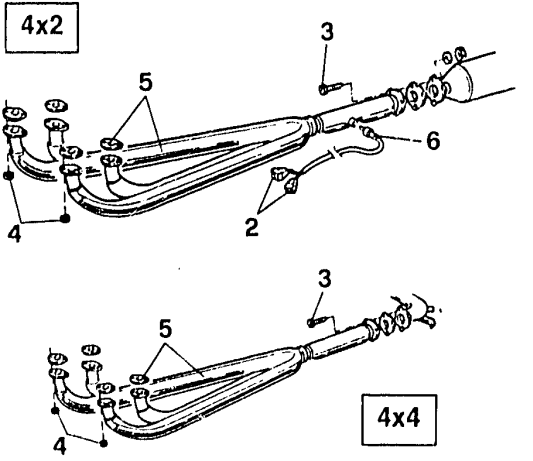

1. Place the vehicle on a lift.
2. By operating in the engine compartment of 4x2 vehicles, unplug the lambda probe connectors and release the wiring from the holding clamps.
3. Raise the vehicle and disconnect the manifolds from the catalytic exhaust by uncrewing the relative bolts.
4. Unscrew the manifold-to-cylinder head fixing nuts.
5. Remove the manifolds with the relevant gaskets.
6. For the 4x2 vehicles, if necessary remove the lambda probe on a bench.

INTERMEDIATE PART

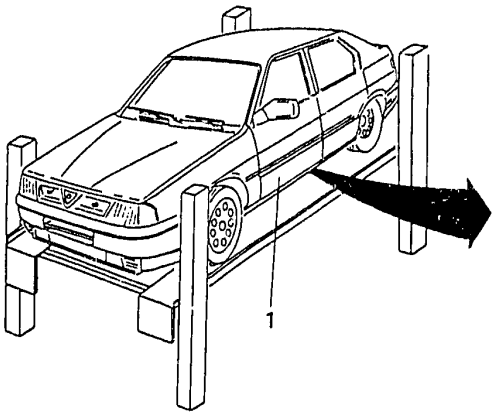

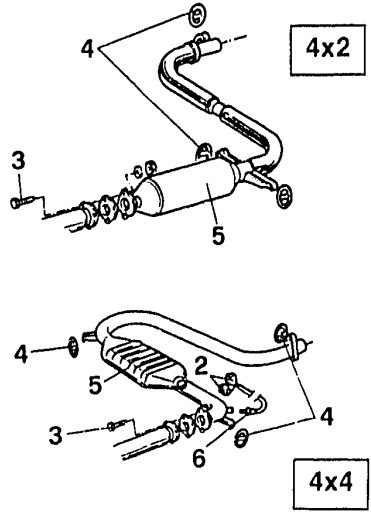

1. Place the vehicle on a lift.
2. By operating in the engine compartment of 4x4 vehicles, unplug the lambda probe connectors and release the wiring from the clamps.
- Raise the vehicle and disconnect the rear section of the exhaust pipe.
3. Unscrew the fixing bolts between the catalytic muffler and the exhaust manifold.
4. Release the supporting brackets from the rubber rings.
5. Remove the intermediate part of the exhaust pipe.
6. For the 4x4 vehicles, if necessary remove the lambda probe on a bench.

REAR PART

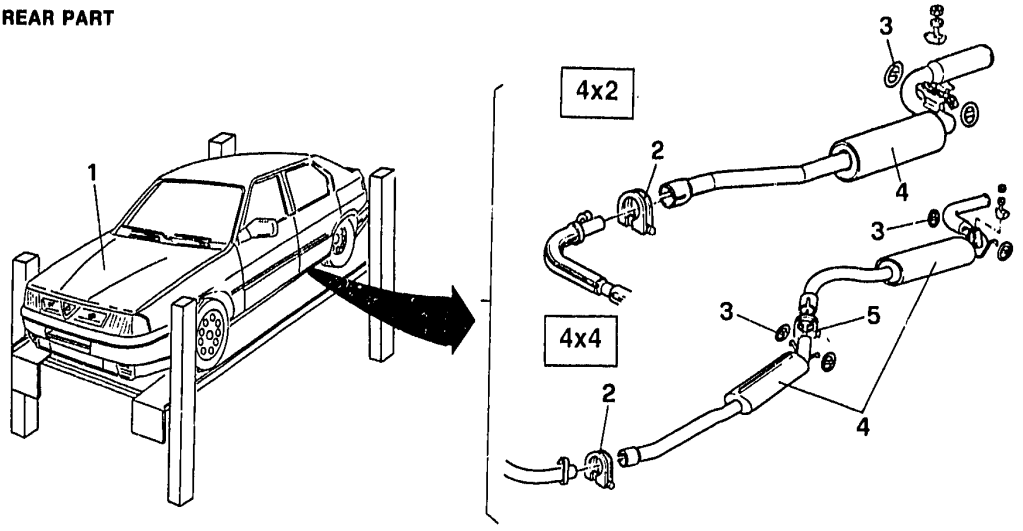

1. Lift the vehicle placed on a lift platform.
2. Unloose the intermediate part-to-rear part connecting clamp.
3. Release the supporting brackets from the rubber rings.
4. Remove the rear part of the exhaust pipe.
5. In the 4x4 vehicles, it is possible to dismantle the exhaust tail pipe by unloosing the relevant fixing clamp.

EXHAUST SYSTEM (for vehicles equipped with catalytic converter (continued)

LAMBDA PROBE REPLACEMENT

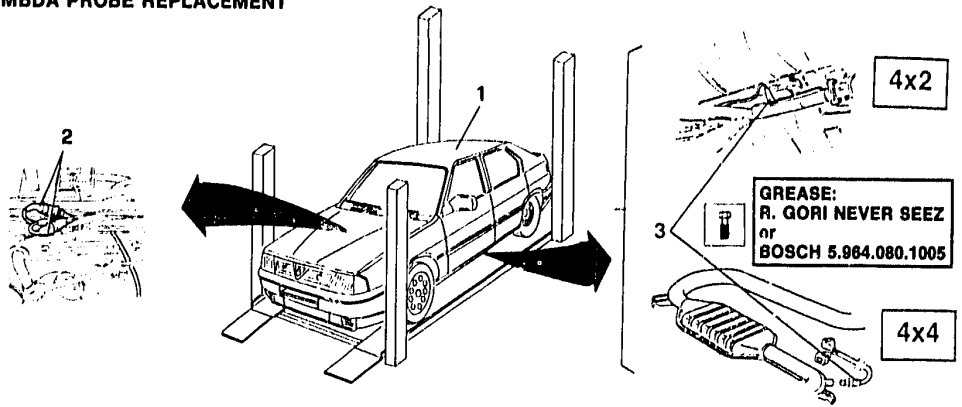

1. Place the vehicle on a lift platform.
2. By operating in the engine compartment, unplug the Lambda probe connectors and release the wiring from the clamps.
3. By operating under the vehicle, unscrew and remove the Lambda probe.

- When re-assembling, smear the Lambda probe threading with the prescribed grease, then fully tighten the probe.
- Restore the connections to the Lambda probe in the engine compartment.

EXHAUST SYSTEM (for vehicles without catalytic converter)

ASSY - 4x2 MODELS

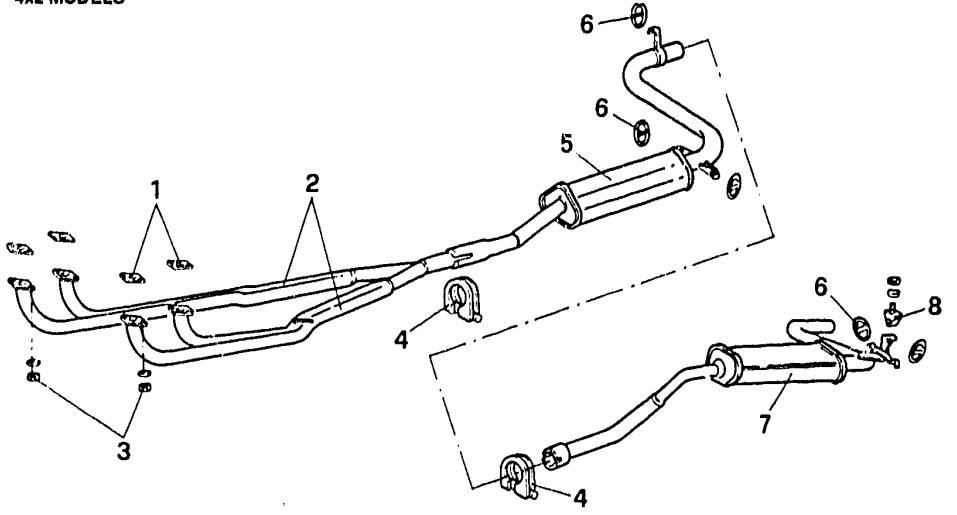

1 Gasket
2 Manifolds - front part
3 Manifold-to-cylinder heads fixing nuts
4 Clamp
5 Silencer - intermediate part
6 Rubber supporting ring
7 Silencer - rear part
8 Buffer

EXHAUST SYSTEM (for vehicles without catalytic converter) (continued)

ASSY - 4x4 MODELS

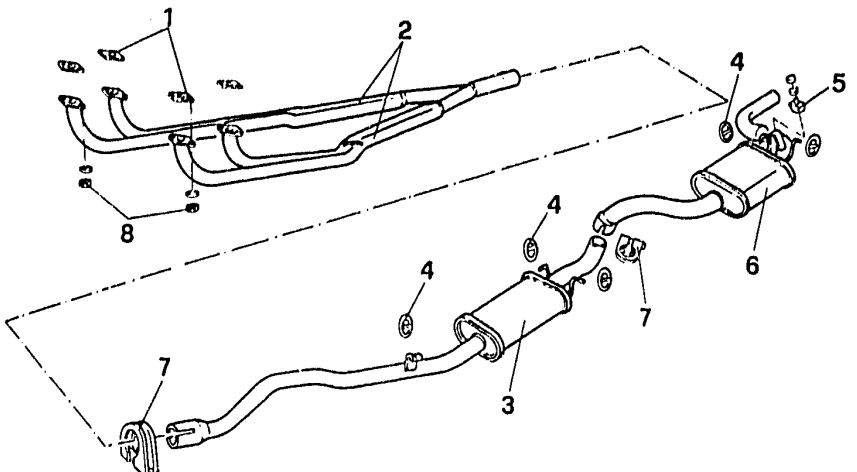

1 Gasket
2 Manifolds - front part
3 Silencer - central part
4 Rubber supporting ring
5 Buffer
6 Rear silencer
7 Clamp
8 Manifold-to-cylinder heads fixing nuts

EXHAUST SYSTEM (For vehicles without catalytic converter) (continued)

FRONT PART

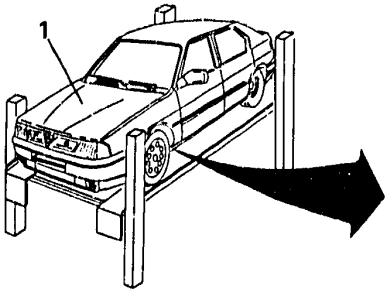

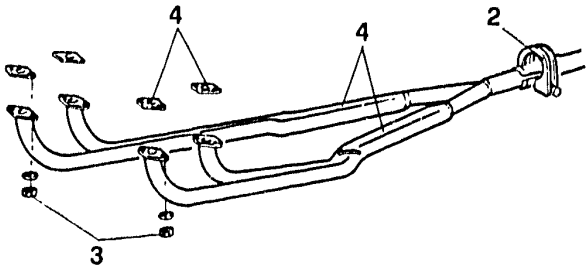

1. Lift the vehicle placed on a lift platform.
2. Unloose the front part-to-intermediate part connecting clamp and move it aside from its seat.
3. Unscrew the manifold-to-cylinder head flange fixing nuts.
4. Remove the front part with the relevant gaskets.

INTERMEDIATE PART

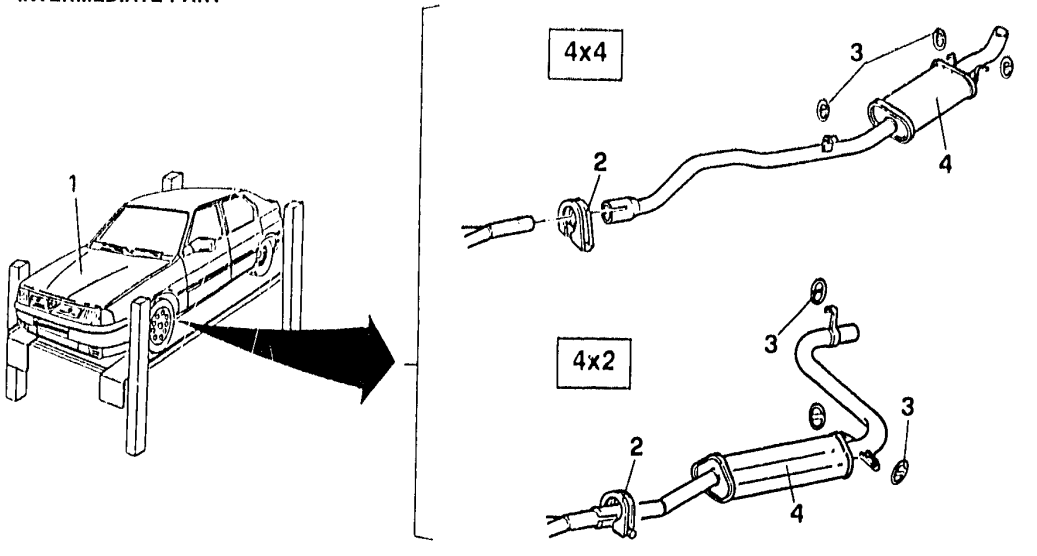

1. Lift the vehicle placed on a lift platform.
- Remove the rear part
2. Unloose the intermediate part-to-front part connecting clamp.
3. Release the supporting brackets of the rubber rings.
4. Remove the intermediate part.

REAR PART

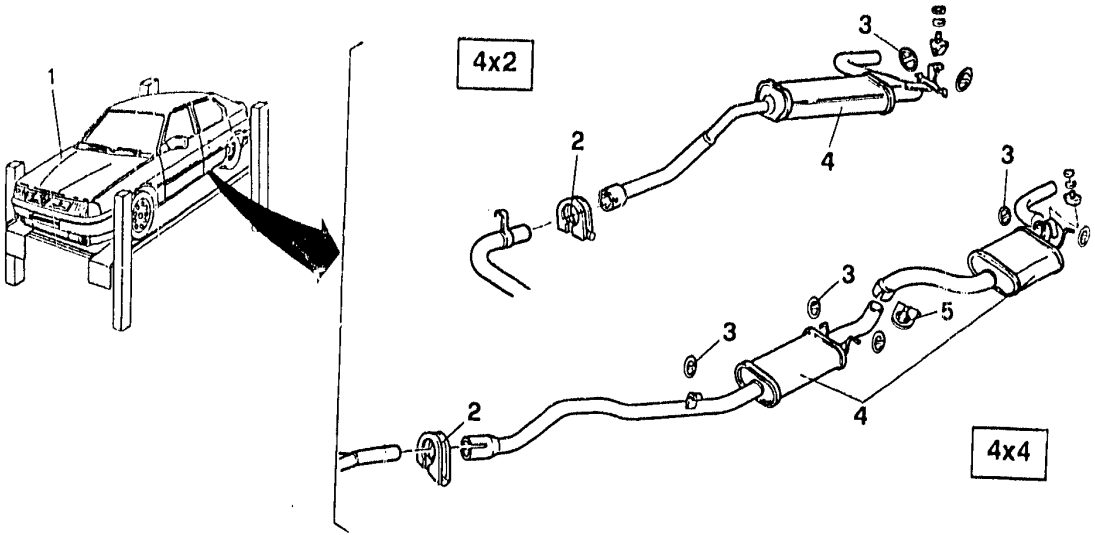

1. Lift the vehicle placed on a lift platform.
2. Unloose the intermediate part-to-rear part connecting clamp.
3. Release the supporting brackets from the rubber rings.
4. Remove the rear part of the exhaust pipe.
5. In the 4x4 vehicles, it is possible to dismantle the exhaust tail pipe by unloosing the relevant fixing clamp.

TDS

ELECTRONIC INJECTION
ENGINES (LE3 - Jetronic)

TECHNICAL DATA AND SPECIFICATIONS

SPECIAL TOOLS

TECHNICAL DATA AND SPECIFICATIONS
CHECKS AND ADJUSTMENTS ..... 04 - 114
Switch adjustment on throttle valve body ..... 04 - 114
Throttle valve body adjustment
(flow rate check) ..... 04 - 115
Accelerator control ..... 04 - 116
Fuel supply circuit ..... 04 - 116
Checking idle speed and exhaust emissions ..... 04 - 117
FLUIDS AND LUBRICANTS ..... 04 - 117
SPECIAL TOOLS ..... 04 - 118

TECHNICAL DATA AND SPECIFICATIONS
CHECKS AND ADJUSTMENTS

Switch adjustment on throttle valve body

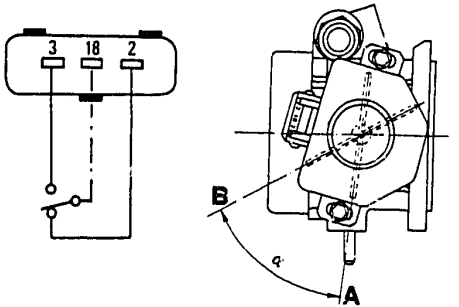

2. Idle speed pin
   (corresponding to A position: throttle valve closed)
3. Max. speed pin
   (corresponding to B position: throttle valve open)

Unit: Ω

	Resistances	
	Pins 2-18	**Pins 3-18**
Throttle valve completely closed	0	∞
Throttle valve opened by an angle of $\alpha = 60° \pm 4°$	∞	0

CHECKS AND ADJUSTMENTS (Continued)

Throttle valve body adjustment (flow rate check)

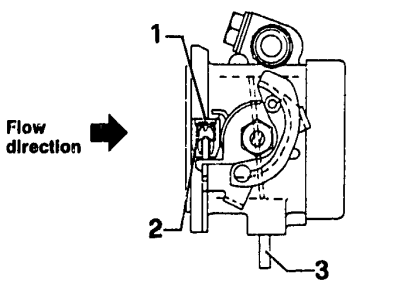

1 Seal
2 Adjusting screw
3 Vacuum intake union

Air passage with throttle valve in closed position(Solex flowmeter) (1)	400 ± 10 N scale

(1) For the measurement, plug the vacuum intake union. Make use os pad No. 1.824.011.000 (C.2.0056) with union C.2.0057.

CHECKS AND ADJUSTMENTS (Continued)

Accelerator control

Clearance between throttle control lever and accelerator cable pawl (accelerator pedal released)

$G_1 = 1 \div 2$ mm

Clearance between throttle control lever and limit stop (with Accelerator pedal fully pressed).

$G_2 = 1 \div 2$ mm

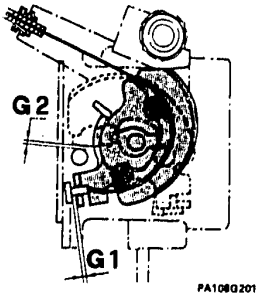

Fuel supply circuit

Features	Unit of measurement	kPa (bar; kg/cm$_2$)
Working pressure (1)		280 ÷ 320 (2.8 ÷ 3.2; 2.9 ÷ 3.3)
Max. allowed pressure for circuit tightness test		400 (4;4.1)

(1) To be measured upstream the pulse damper, with the vacuum intake pipe detached from the pressure regulator.

Checking idle speed and exhaust emission			Without catalytic converter	With catalytic converter
Engine idle r.p.m. (with engine warm, gearbox in neutral and clutch engaged)		r.p.m.	800 ÷ 900	900 ÷ 1050
Percentage of exhaust CO at idle speed	% in vol.	On leaving exhaust pipe	0,7 ÷ 1,7	≤ 0,5
		Upstream of cataiytic converter	-	0,6 ÷ 1,0
Unburt hydrocarbons HC		On leaving exhaust pipe	-	≤ 50 p.p.m.
		Upstream of catalytic converter	-	≤ 300 p.p.m.

FLUIDS AND LUBRICANTS

Application	Type	Denomination	Q.ty
Accelerator pedal shaft (on supporting grommets)	GREASE	ISECO Molykote Longterm n.2	-
Spacer on accelerator pedal pin	GREASE	AGIP F1 Grease 15	-

SPECIAL TOOLS

Identification Number	Name	
1.824.011.000 (C.2.0056)	Pad for airflow rate test (flow rate check)	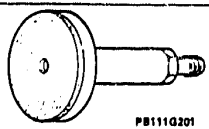 PB111G201
(C.2.0057)	Union	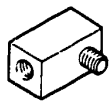 PB111G202
1.824.013.000 (C.2.0126)	Pressure reducer	 PB111G203
1.824.020.000 (C.4.0101)	Instrument for measuring pressure	 PB111G204

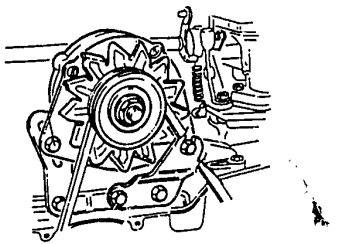

TWIN CARBURETOR ENGINE

IGNITION, CHARGING SYSTEM

TECHNICAL DATA AND SPECIFICATIONS

IGNITION, CHARGING SYSTEM

ALTERNATOR
Removal - Installation ..... 05 - 1
STARTING MOTOR
Removal - Installation ..... 05 - 2
IGNITION COIL
Removal - Installation ..... 05 - 3
IGNITION DISTRIBUTOR
Removal - Installation ..... 05 - 4

TECHNICAL DATA AND SPECIFICATIONS

Starting motor ..... 05 - 5
Alternator ..... 05 - 6
Ignition coil ..... 05 - 6
Spark plugs ..... 05 - 6
Battery ..... 05 - 6
Automatic advance curve ..... 05 - 7
Pneumatic advance curve ..... 05 - 7
FLUIDS AND LUBRIFIANTS ..... 05 - 8
TIGHTENING TORQUES ..... 05 - 8

IGNITION, CHARGING SYSTEM

ALTERNATOR

Removal - Installation

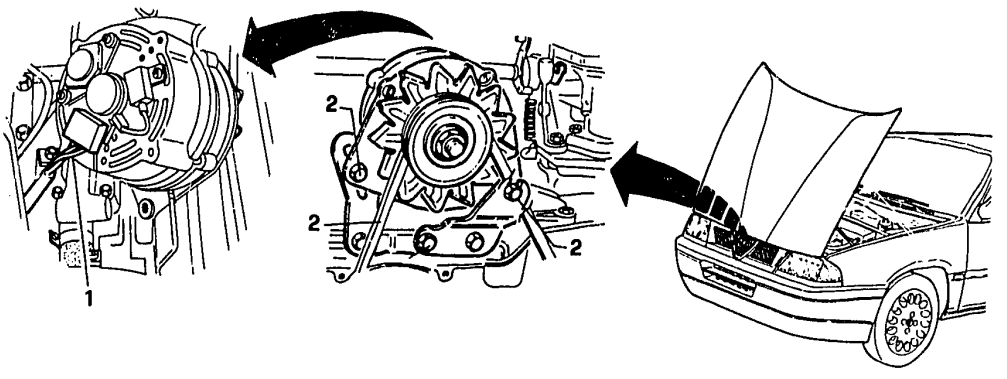

PA001H201

- Disconnect the battery negative cable.
1. Unplug the connector from the alternator.
2. Slacken the alternator fixing bolts and remove the drive belt.

- Completely unscrew the bolts and remove the alternator.
- When re-assembling, adjust the tension of the alternator drive belt (see **GR 00**).

STARTING MOTOR

Removal - Installation

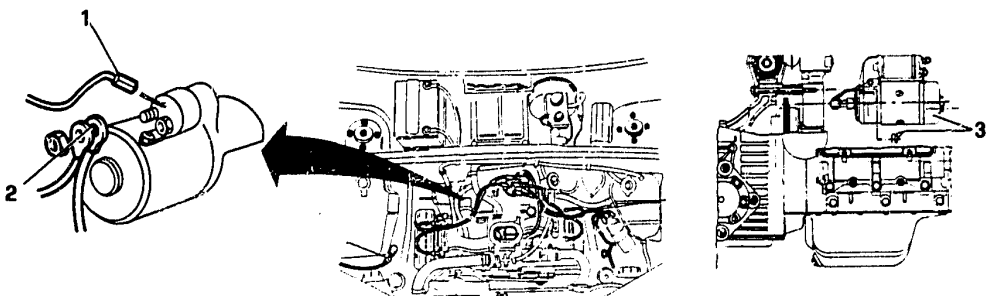

- Disconnect negative battery terminal.
- Remove entire air filter assembly (See **GR. 04**).

1. Disconnect starting motor energizing cable.
2. Disconnect starting motor power supply cables.
3. Unscrew the nuts securing starting motor; then remove motor from engine.

IGNITION COIL

Removal - Installation

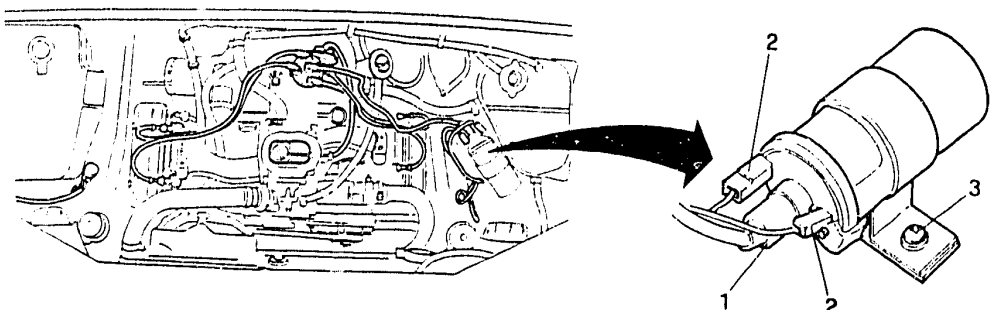

- Disconnect the battery negative cable.
1. Disconnect the high-voltage cable from the coil.
2. Disconnect the low-voltage cables from coil and rev. counter.
3. Unscrew the clamp fixing screws, thon remove the ignition coil.

IGNITION DISTRIBUTOR
Removal - Installation

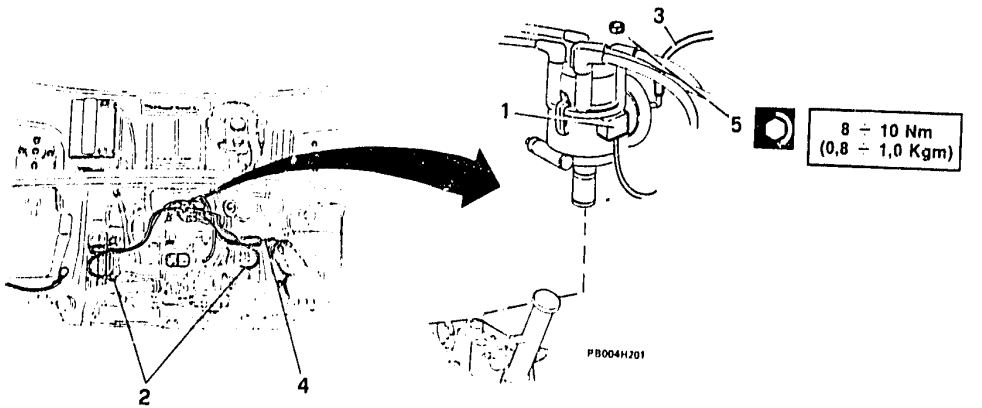

- Disconnect the battery negative cable.
1. Unplug the connector from the ignition distributor.
2. Disconnect the cables from the spark plugs.
3. Disconnect the vacuum advance tube from the distributor.
4. Disconnect the high-voltage cable from the coil.
5. Remove the distributor complete with cap and cables.

TECHNICAL DATA AND SPECIFICATIONS

Starting motor

Type	MAGNETI MARELLI	06859 (*)	BOSCH
Power	0,9 kW	0,8 kW	0,8 kW
Pinion module	2,116	2,116	2,116

(*) Supplier Code

Starter motors installed starting from engine N°:30743 - 043288/30732 - 012715/30734 - 001651

Operating test when empty	Voltage	12 V
	Absorbed power	30 A
	R.P.M.	5000 r.p.m.
Operating test when loaded	Voltage	9 V
	Absorbed power	300 A
	R.P.M.	1450 r.p.m.
	Torque	5,5 Nm
Operating test in short-circuit	Voltage	5 V
	Absorbed power	400 A
	Torque	5,5 Nm

Alternator

Type	TRIFASE BOSCH with a built-in electrical regulator
Power	55 A

Ignition coil

Type	BOSCH
Primary winding voltage	12 V

Spark plugs

Type	BOSCH

Battery (30743 engine)

Type	FIAMM	SCAINI	MAGNETI MARELLI
Capacity	50 Ah	50 Ah	50 Ah
Discharge current	225 A	225 A	225 A

Battery (30732 - 30734 engines)

Type	FIAMM	SCAINI	APD ARTICA
Capacity	50 Ah	50 Ah	50 Ah
Discharge current	255 A	255 A	255 A

Automatic advance curve

BOSCH DISTRIBUTOR

Distributor speed r.p.m.		175	200	250	500	1000	1500	2000	2500	3000
Automatic advance curve	Upper	- 30'	- 15'	0°	+ 45'	7°	9°30'	13°45'	13°30'	13°
	Lower	+ 30'	+ 15'	0°	- 45'	5°	11°45'	11°45'	11°15'	11°

Pneumatic advance curve

BOSCH DISTRIBUTOR

Vacuum pressure mm HG		0	100	150	200	250	300	350	400
Pneumatic advance curve	Upper	+ 30'	+ 30'	1°	2°30'	4°15'	5°45'	7°30'	7°30'
	Lower	- 30'	- 30'	- 30'	- 30'	1°15'	3°	4°30'	5°30'

FLUIDS AND LUBRICANTS

APPLICATION	TYPE	NAME	Q.TY
Spark plug thread	OIL	ISECO Molykote A	-

TIGHTENING TORQUES

Item \ Unit of measurement	Nm	Kgm
Spark plug tightening in oil: ISECO: Molykote A	25 to 34	2.5 to 3.5
Nut securing distributor	8 to 10	0.8 to 1.0

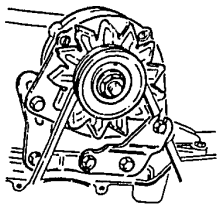

ELECTRONIC INJECTION ENGINES (LE3 - Jetronic)

IGNITION, CHARGING SYSTEM

TECHNICAL DATA AND SPECIFICATIONS

IGNITION, CHARGING SYSTEM

ALTERNATOR
Removal - Installation ..... 05 - 9
STARTING MOTOR
Removal - Installation ..... 05 - 10
IGNITION COIL
Removal - Installation ..... 05 - 11
IGNITION DISTRIBUTOR
Removal - Installation ..... 05 - 12
IGNITION ELECTRONIC CONTROL UNIT
Removal - Installation ..... 05 - 13

TECHNICAL DATA AND SPECIFICATIONS

Starting motor ..... 05 - 14
Alternator ..... 05 - 14
Ignition coil ..... 05 - 15
Spark plugs ..... 05 - 15
Battery ..... 05 - 15
Automatic advance curve ..... 05 - 16
Pneumatic advance curve ..... 05 - 16
FLUIDS AND LUBRICANTS ..... 05 - 17
TIGHTENING TORQUES ..... 05 - 17

IGNITION, CHARGING SYSTEM (Continued)

ALTERNATOR

Removal - installation

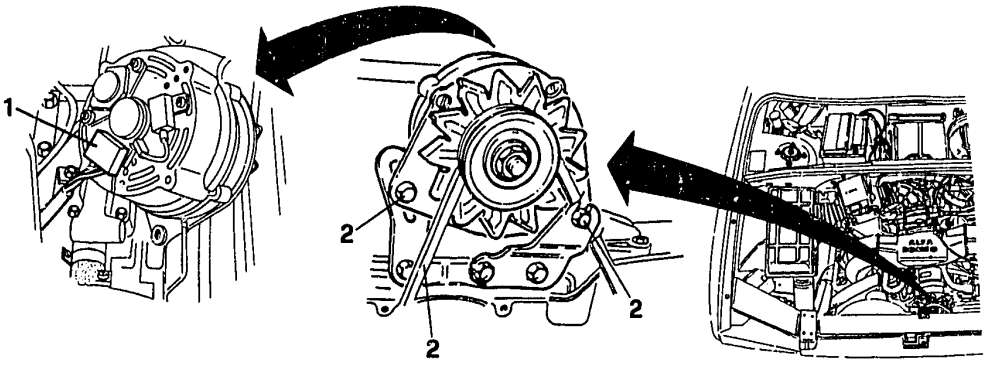

PA009H201

- Disconnect the battery negative cable.
1. Unplug the connector from the alternator.
2. Slacken the alternator fixing bolts and remove the drive belt.

- Completely unscrew the bolts and remove the alternator.
- When re-assembling, adjust the tension of the alternator drive belt (see **GR. 00**).

STARTING MOTOR
Removal - Installation

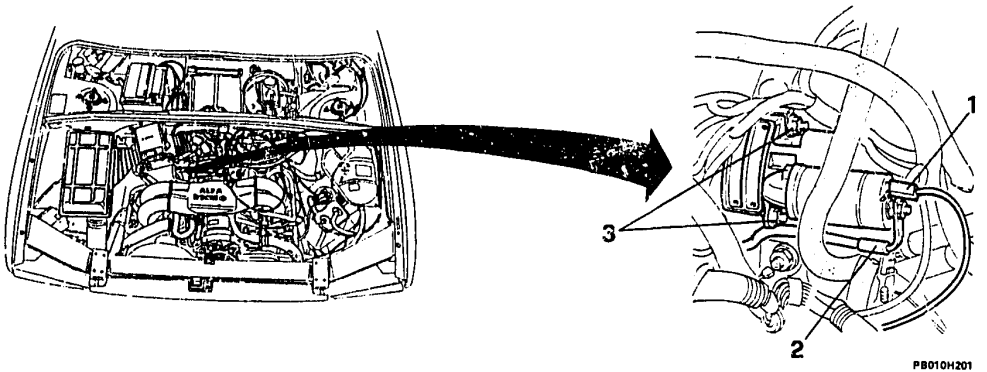

- Disconnect negative battery terminal.
- Remove car bonnet (See **GR. 56**).
- Remove entire air filter assembly (See **GR. 04**).
- Remove air intake box (See **GR. 04**).

1. Disconnect starting motor energizing cable.
2. Disconnect starting motor power supply cables.
3. Unscrew nut securing starting motor and remove it.

IGNITION COIL

Removal - Installation

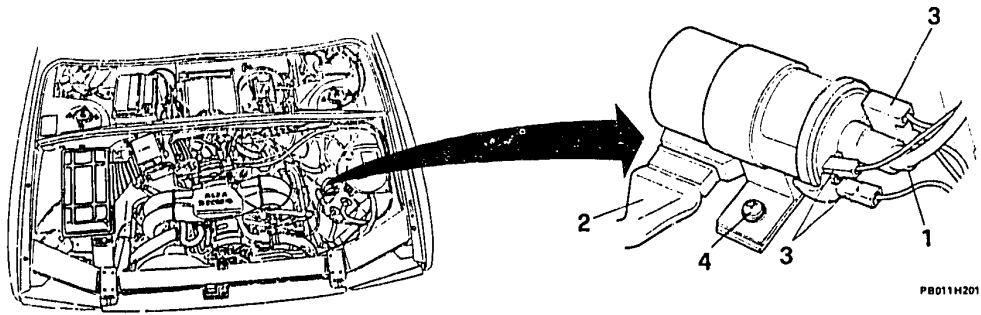

- Disconnect the battery negative cable.
1. Disconnect the high-voltage cable from the coil
2. Unplug the connector from the power module.
3. Disconnect the low-voltage cables from coil and rev. counter
4. Unloose the clamp fixing screws, then remove the ignition coil complete with power module.

IGNITION DISTRIBUTOR

Removal - Installation

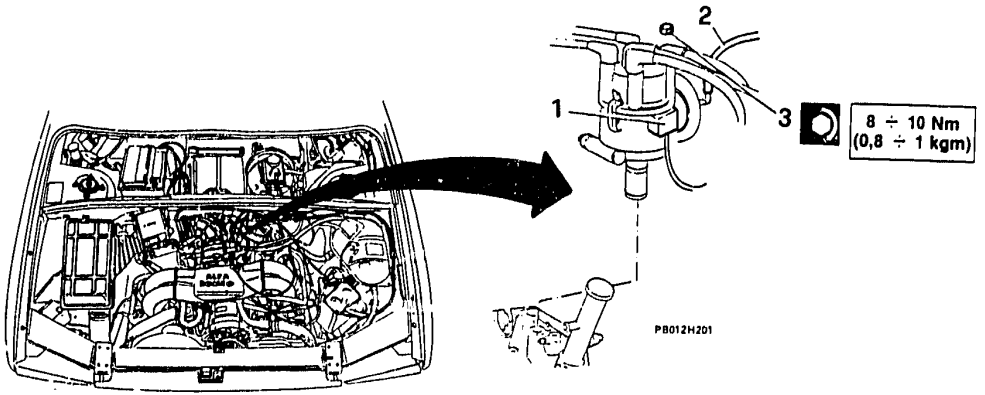

- Disconnect the battery negative cable.

1. Unplug the connector from the ignition distributor.

- Disconnect the spark plug cables.

2. Disconnect the vacuum advance tube from the distributor.

- Disconnect the high-voltage cable from the coil

3. Remove the distributor complete with cap and cables.

IGNITION ELECTRONIC CONTROL UNIT

Removal - Installation

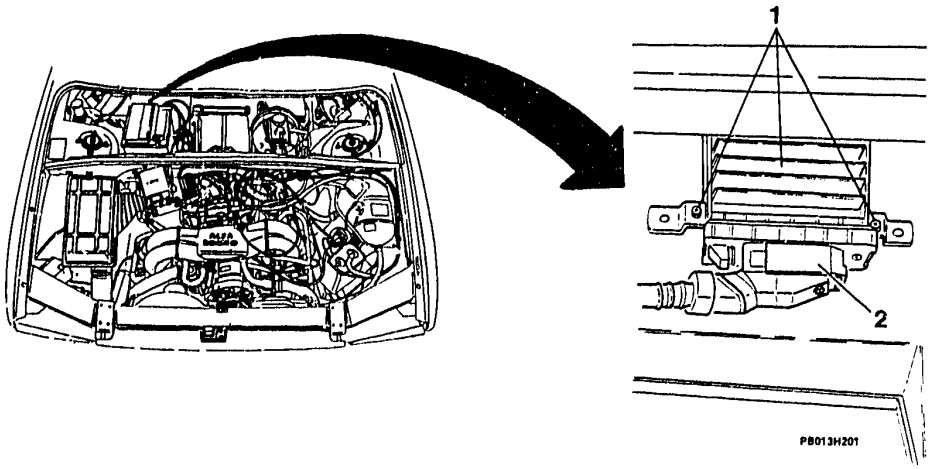

- Disconnect negative battery terminal.

1. Unscrew the two screws and pull back the ECU.
2. Disconnect ECU connector.

TECHNICAL DATA AND SPECIFICATIONS

Starting motor

Type	BOSCH
Power	0,85 kW

Starter motors installed starting from engine N°: 30736 - 014932/30737 - 005348

Operating test when loaded	Voltage	12 V
	Absorbed power	70 A
	R.P.M.	3000 r.p.m.
Operating test in short-circuit	Voltage	9 V
	Absorbed power	290 A
	R.P.M.	1700 r.p.m.
	Torque	6 Nm

Alternator

Type	BOSCH
Power	65 A

Ignition coil

Type	BOSCH
Primary winding voltage	12 V

Spark plugs

Type	LODGE 25HL

Battery

Type	FIAMM		SCAINI		MAGNETI MARELLI	
Capacity	50 Ah	55 Ah	50 Ah	55 Ah	50 Ah	55 Ah
Discharge current	225 A	255 A	225 A	255 A	225 A	255 A

Automatic advance curve

BOSCH DISTRIBUTOR

Distributor speed r.p.m.		1000	1250	1500	2000	2500	2750	3000
Automatic advance curve	Upper	+ 30'	+ 30'	1°	5°	8°30'	10°	10°
	Lower	- 30'	- 30'	- 30'	2°	6°	7°30'	8°

Pneumatic advance curve

BOSCH DISTRIBUTOR

Vacuum pressure mm HG		0	50	100	200	250	300	400
Pneumatic advance curve	Upper	+ 30'	+ 30'	1°	5°	7°	8°30'	10°
	Lower	- 30'	- 30'	- 30'	2°	4°	6°	8°

FLUIDS AND LUBRICANTS

APPLICATION	TYPE	NAME	Q.TY
Spark plug thread	OIL	ISECO Molykote A	-

TIGHTENING TORQUES

Item / Unit of measurement	Nm	Kgm
Spark plug tightening in oil: ISECO: Molykote A	25 to 34	2.5 to 3.5
Nut securing distributor	8 to 10	0.8 to 1.0

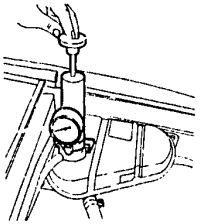

TWIN CARBURETOR ENGINE

COOLING SYSTEM

TECHNICAL DATA AND SPECIFICATIONS

COOLING SYSTEM

ASSY ..... 07 - 1
DESCRIPTION ..... 07 - 2
WATER PUMP ..... 07 - 3
Removal - Installation ..... 07 - 3
THERMOSTAT ..... 07 - 5
Removal - Installation ..... 07 - 5
Checks and Inspections ..... 07 - 6
RADIATOR ..... 07 - 7
Assy ..... 07 - 7
Removal - Installation ..... 07 - 8
ELECTRIC FAN ENABLING THERMAL CONTACT ..... 07 - 10
Replacement ..... 07 - 10
CIRCUIT TIGHTNESS CHECK ..... 07 - 11
Hydraulic circuit tightness test ..... 07 - 11
Pressurized cap tightness test ..... 07 - 12
COOLING CIRCUIT REFILLING ..... 07 - 13

TECHNICAL DATA AND SPECIFICATIONS

Cooling system ..... 07 - 14
Coolant ..... 07 - 14
SEALING AND FIXING COMPOUNDS ..... 07 - 15
TIGHTENING TORQUES ..... 07 - 15

COOLING SYSTEM
ASSY

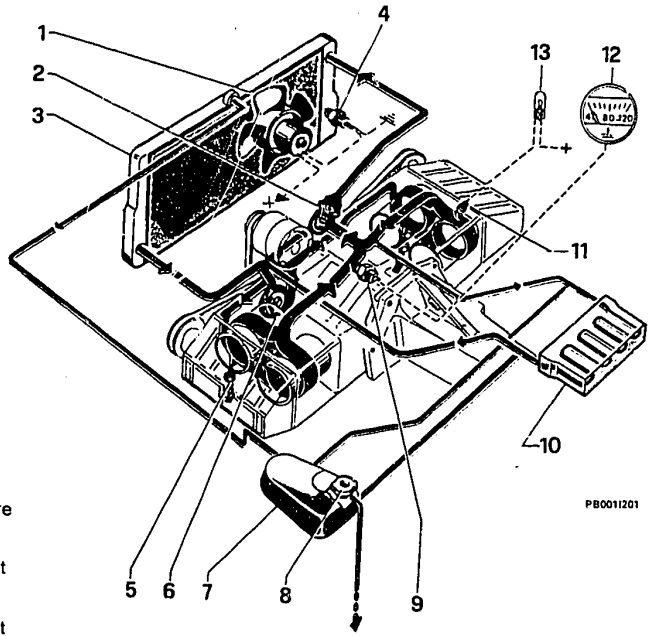

1 Electric fan
2 Thermostat
3 Radiator
4 Electric fan thermal contact
5 Coolant drain plug
6 Pump
7 Expansion tank
8 Expansion tank cap
9 Transmitter for coolant temperature indicator
10 Heater
11 Coolant temperature warning light thermal contact
12 Coolant temperature indicator
13 Coolant temperature warning light

DESCRIPTION

The cooling system is of water-type, with forced circulation by centrifugal pump belt-driven by crankshaft.

A thermostat is fitted to the manifold outlet, allowing the engine to reach its operating temperature, and a quick warming-up at cold starts, since the thermostatic valve opens only when the coolant reaches a temperature of approx. 80°C.
In addition to the air ram effect, the radiator is also cooled down by an electric fan controlled by a thermal contact placed on the radiator.
The circuit is provided with a water temperature transmitter installed on the intake manifold and connected to the indicator on the instrument panel; a water temperature thermal contact, secured to the head, and connected to the warning light on the instrument panel to visually warn that the maximum permissible value of the coolant temperature(105°C) has been exceeded.

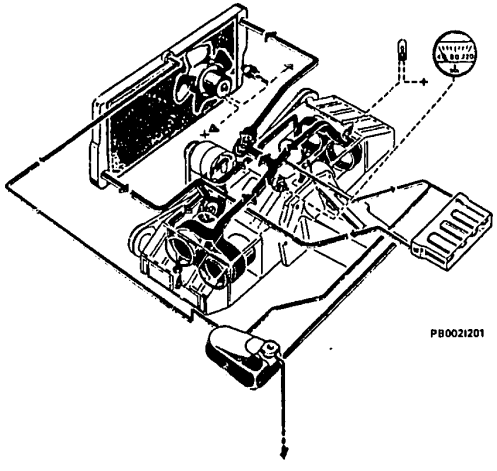

WATER PUMP

Removal - Installation

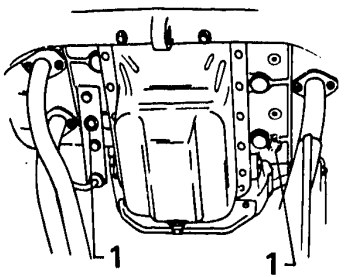

PA0031201

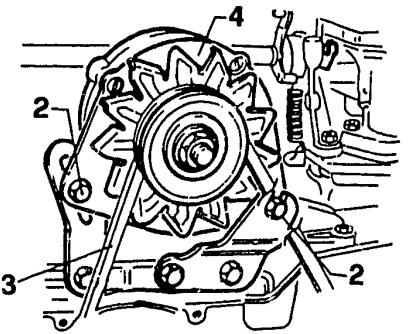

PA0031202

1. Drain the coolant by removing the two plugs placed under the cylinder block.
2. Slacken the alternator fixing bolts.
3. Remove the drive belt.
4. Remove the alternator.

Removal - Installation (continued)

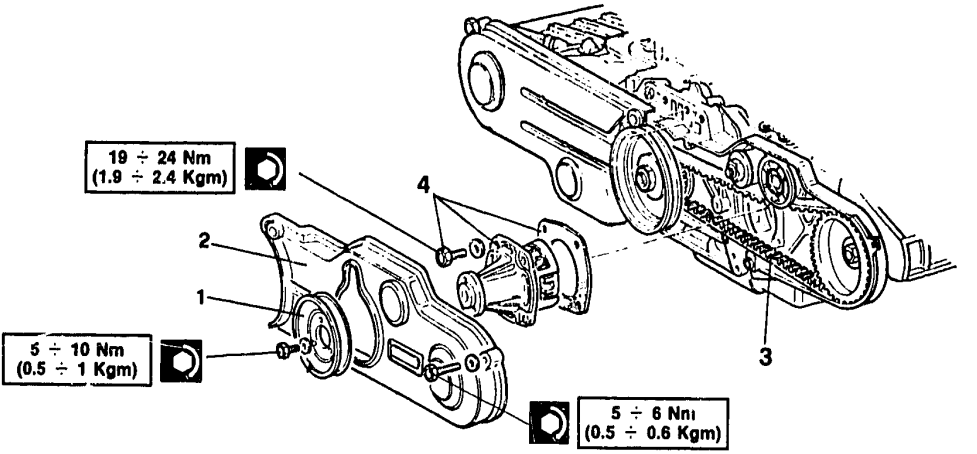

1. Remove the pump driving pulley.
2. Remove the protection of the left timing belt.
3. Remove the left timing belt.
4. Remove the screws and the pump with the relevant gasket.

- When re-assembling, proceed to the fitting of the timing belt and the tension adjustment of the pump - alternator driving belt (see **GR 00**).

THERMOSTAT
Removal - Installation

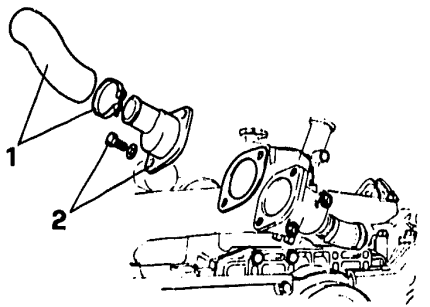

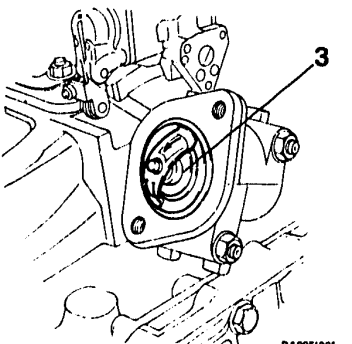

- Drain the coolant till reaching the lower level of the thermostat cup.
1. Disconnect the thermostat cover-to-radiator connection sleeve.
2. Remove the screws and the cover witht the relevant gasket.
3. Extraxt the thrmostat valve from its cup.

When re-assembling, position the thermostat with the arrow pointing in the same direction of the water flow.

THERMOSTAT (continued)

Checks and inspections

1. Fit the thermostat valve on a special test equipment.
2. Fill up the tank with water and switch on the equipment to heat up the thermostat.

- Check the thermostat temperature setting

Opening start	84 ÷ 88°C
Max. opening	98°C
Valve stroke	⩾ 7 mm

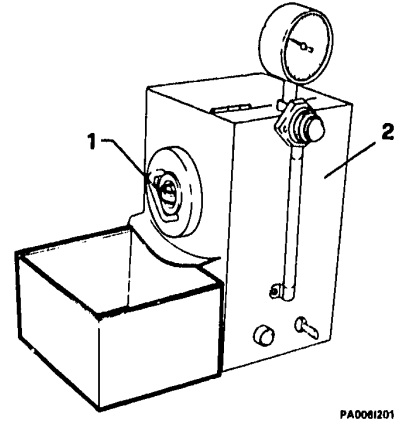

PA0061201

RADIATOR

Assy

1 Electric fan
2 Shroud
3 Gasket
4 Support
5 Breather pipe
6 Coolant outlet sleeve
7 Thermal contact
8 Gasket
9 Gasket
10 Rubber pad
11 Radiator
12 Coolant inlet sleeve
13 Clip
14 Washer
15 Rubber pads
16 Spacer
17 Washer
18 Clip
19 Flexible support
20 Spacer
21 Washer

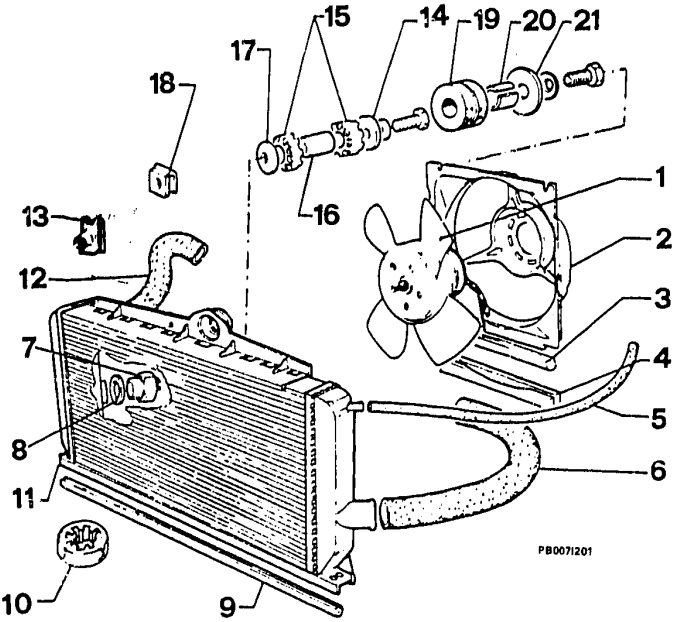

RADIATOR (continued)

Removal - Installation

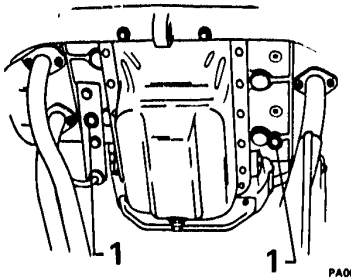

PA0031201

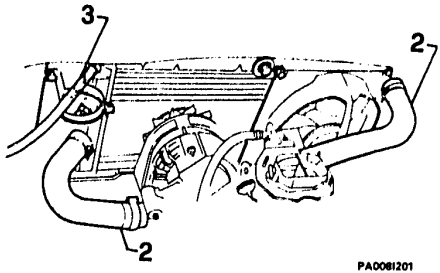

PA0061201

- Disconnect the battery negative cable.

1. Unscrew the plugs on the cylinder block lower side and completely drain the coolant.

2. Loosen the clamps and disconnect the two water inlet and outlet sleeves from the radiator.

3. Unloose the clamp and remove the breather pipe from the radiator.

Removal - Installation (Continued)

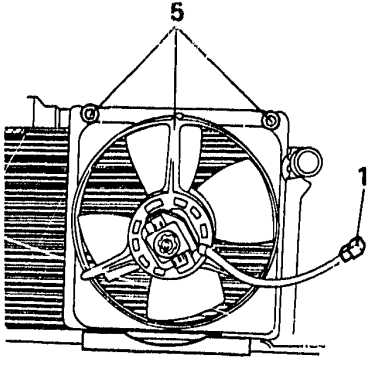

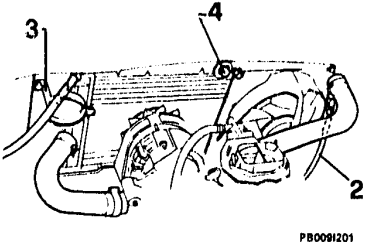

1. Disconnect electric fan connection.
2. Disconnect the two electrical connections from thermal contact.
3. Unscrew the nut securing the air intake support bracket and remove it.
4. Remove screws and associated washers securing radiator.
- Remove radiator from engine compartment.
5. Working at the bench, unscrew screws securing electric fan and then remove it sliding it out from its lower channel.

ELECTRIC FAN ENABLING THERMAL CONTACT

Replacement

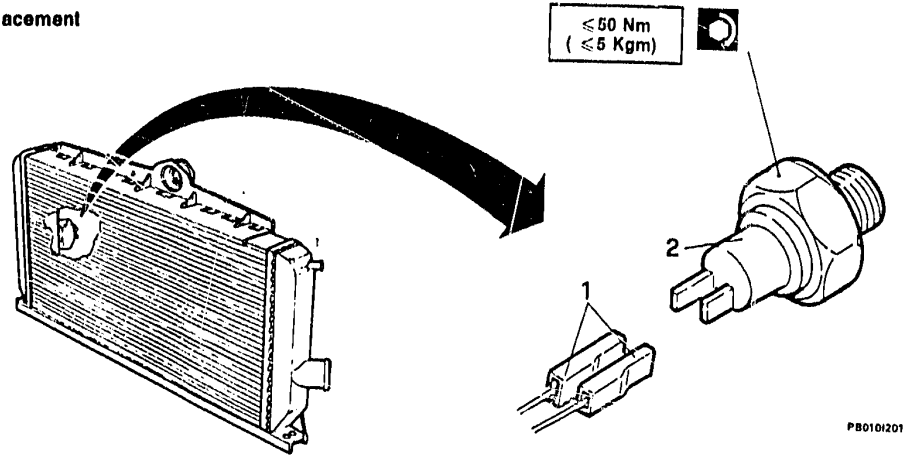

- Disconnect the battery negative cable.
- Completely empty the cooling circuit.

1. Disconnect the electrical connections.
2. Remove the thermal contact and check the setting. In the case of incorrect values replace it.

Electric fan switching on temperature	92 ± 2°C
Electric fan switching off temperature	87 ± 2°C

CIRCUIT TIGHTNESS CHECK

Hydraulic circuit tightness test

Hydraulic circuit check pressure
107.9 kPa (1.08 bar; 1.1 Kg/cm²)

- Unscrew the pressurized cap from the expansion tank.

1. Screw the hydraulic circuit test instrument on the expansion tank neck.
2. Pressurize the circuit and on the test instrument check that the pressure remains steady at the prescribed value.

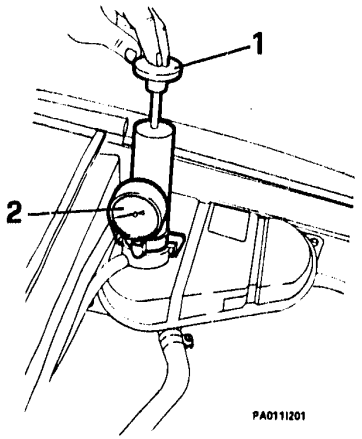

CIRCUIT TIGHTNESS CHECK (continued)

Pressurized cap tightness test

Pressurized cap set pressure
100 ± 10 kPa (1,0 ± 0,1 bar; 1,0 ± 0,1 kg/cm²)

1. Screw the union on the test instrument and fit it on the expansion tank pressurized cap.
2. Pressurize and on the test instrument check that the bleed valve opens at the set pressure.

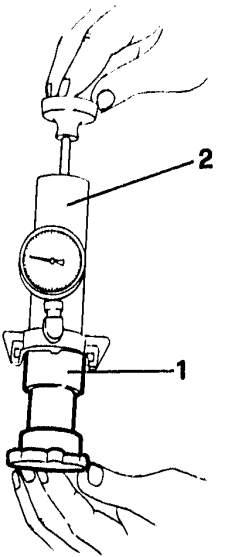

PA0121201

COOLING CIRCUIT REFILLING

The anti-freeze mixture is a product which may damage the paint. Avoid any contact with painted surfaces.

- After having drained the circuit, refill it with fluid in quantity and quality indicated in table.
- Refill the circuit till reaching the MAX. reference mark on the expansion tank.
- Start up the engine and let it reach the operating temperature, so that the thermostat opening bleeds the residual air contained in the circuit.
- At cold engine, top up till the level reaches the MAX. reference mark on the expansion tank.
- Refit the closure cap on the expansion tank.

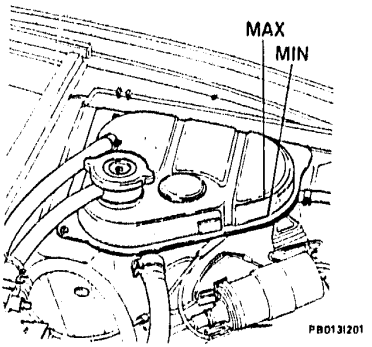

Minimum temperature		-40°C
Concentrated antifreeze	Alfa Romeo Antifreeze	4.3 litres (55%)
Distilled water		3.5 litres (45%)
Ready-for-use antifreeze	Alfa Romeo Climafluid Permanent -40°C	7.8 litres
	IP Antifreeze	
	AGIPAntifreeze Extra	

TECHNICAL DATA AND SPECIFICATIONS

TECHNICAL DATA

Cooling system

Check pressure KPa (bar; Kg/cm²)	- Pressurized cap setting	100 ± 10 (1,0 ± 0,1; 1,0 ± 0,1)
	- Circuit tightness	107,9 (1,08; 1,1)
Thermostatic valve	- Opening start temperature	84 ÷ 88 °C
	- Max. opening temperature	98 °C
	- Valve stroke	≥ 7mm
Electric fan	- Actuation temperature	92 ± 2 °C
	- Switching off temperature	87 ± 2 °C

Coolant

Minimum temperature		- 40°C
Concentrated antifreeze	Alfa Romeo Antifreeze	4,3 litres (55%)
Distilled water		3,5 litres (45%)
Antifreeze ready for use	Alfa Romeo Climafluid Permanent -40°C	7,8 litres
	IP Antifreeze	
	AGIP Antifreeze Extra	

SEALING AND FIXING COMPOUNDS

APPLICATION	TYPE	DENOMINATION	Q.TY
Sealing compound for cooling circuit	Sealing powder	AREXONS	10 g

TIGHTENING TORQUES

Item \ Unit of measure	Nm	Kgm
Water temperature transmitter on supply manifold	33 ÷ 41	3.4 ÷ 4.2
Water pump fixing screws	19 ÷ 24	1.9 ÷ 2.4
Water pump pulley fixing	5 ÷ 10	0.5 ÷ 1
Thermal contact for electric fan enabling	⩽ 50	⩽ 5

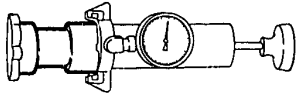

ELECTRONIC INJECTION ENGINES (LE3 - Jetronic)

COOLING SYSTEM

TECHNICAL DATA AND SPECIFICATIONS

COOLING SYSTEM

ASSY ..... 07 - 16
DESCRIPTION ..... 07 - 17
WATER PUMP ..... 07 - 18
Removal - Installation ..... 07 - 18
THERMOSTAT ..... 07 - 20
Removal - Installation ..... 07 - 20
Checks and Inspections ..... 07 - 22
RADIATOR ..... 07 - 23
Assy ..... 07 - 23
Removal - Installation ..... 07 - 24
ELECTRIC FAN ENABLING THERMAL CONTACT ..... 07 - 26
Replacement ..... 07 - 26
CIRCUIT TIGHTNESS CHECK ..... 07 - 27
Hydraulic circuit tightness test ..... 07 - 27
Pressurized cap tightness test ..... 07 - 28
COOLING CIRCUIT REFILLING ..... 07 - 29

TECHNICAL DATA AND SPECIFICATIONS

Cooling system ..... 07 - 30
Coolant ..... 07 - 30
SEALING AND FIXING COMPOUNDS ..... 07 - 31
TIGHTENING TORQUES ..... 07 - 31

COOLING SYSTEM
ASSY

1 Electric fan
2 Thermostat
3 Radiator
4 Electric fan control thermal contact
5 Coolant draining plug
6 Pump
7 Expansion tank
8 Expansion tank cap
9 Coolant temperature warning light thermal contact
10 Heater
11 Coolant temperature warning light
12 Coolant temperature indicator
13 Thermistor for coolant temperature indicator
14 Fluid level sensor for Alfa Control
15 Coolant minimum level warning light for Alfa Control

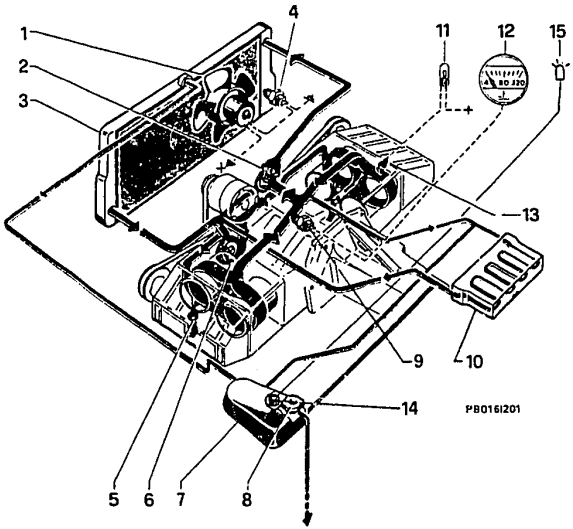

DESCRIPTION

The cooling action is water-type with forced circulation by means of a centrifugal pump driven by the crankshaft through a V-belt.
A thermostat is fitted to the manifold outlet, allowing the engine to reach its operating temperature, and a quick warming-up at cold starts, since the thermostatic valve opens only when the coolant has reached a temperature of approx. 80°C.
In addition to the air ram effect, the radiator is also cooled down by an electric fan controlled by a thermal contact placed on the radiator.
The circuit is provided with a water temperature transmitter installed on the intake manifold and connected to the indicator on the instrument panel; a water temperature thermal contact, secured to the head, and connected to the warning light on the instrument panel to visually warn that the maximum permissible value of the coolant temperature(105°C) has been exceeded.

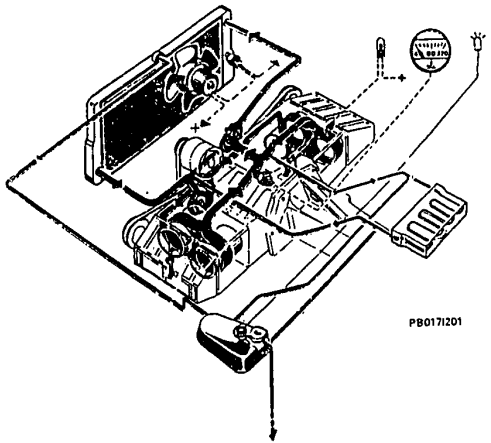

WATER PUMP

Removal - Installation

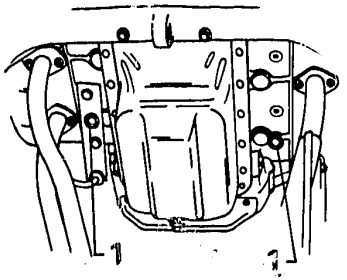

PA003I201

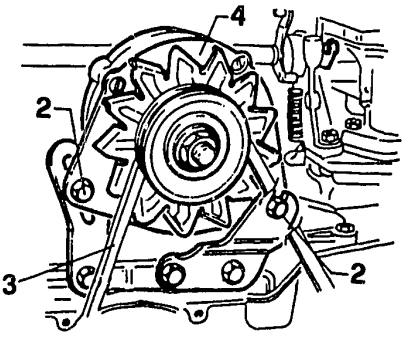

PA003I202

1. Drain the coolant by removing the two plugs placed under the crankcase.
2. Slacken the alternator fixing bolts.
3. Remove the belt.
4. Remove the alternator.

Removal - Installation (continued)

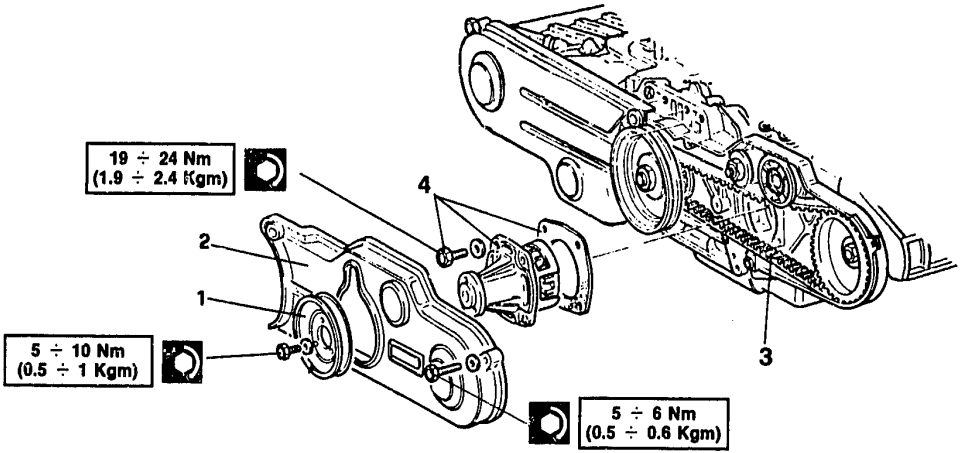

1. Remove the pump driving pulley.
2. Remove the protection cover of the left timing belt.
3. Remove the left timing belt.
4. Unscrew the screws and remove the pump with th relevant gasket.

- When re-assembling, proceed to timing operations before installing the timing belt and tensioning the alternator and water pump belt (see **GR 00**).

THERMOSTAT

Removal - Installation

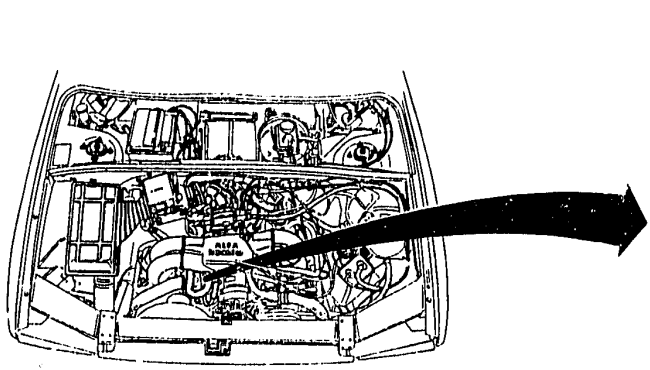

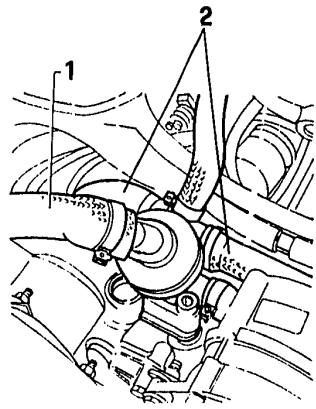

PA0201201

- Drain the coolant from the cooling circuit.
1. Disconnect the coolant delivery sleeve from the thermostat.
2. Disconnect the connection pipes to the manifolds from the thermostat.

Removal - Installation (continued)

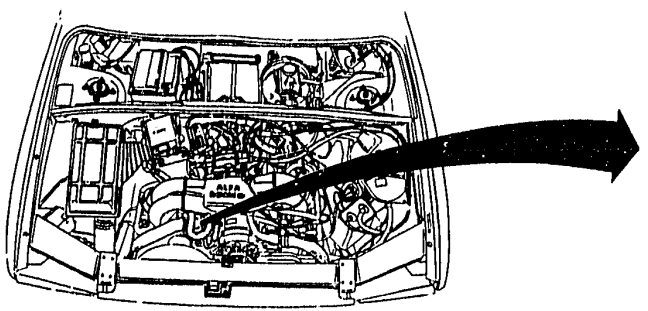

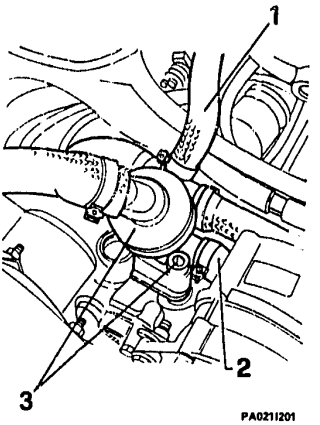

PA0211201

1. Disconnect the coolant delivery pipe to the radiator from the thermostat.
2. Disconnect the connection pipe to the union, from the thermostat.
3. Unscrew the screw fixing the thermostat to the crankcase, then remove the thermostat.

THERMOSTAT (continued)

Checks and inspections

1. Install the thermostat on a suitable test equipment.
2. Fill the equipment with water and turn it on in order to heat the water.

- Check the thermostat setting.

Opening start	84 ÷ 88°C
Maximum opening	98°C
Valve stroke	⩾ 7 mm

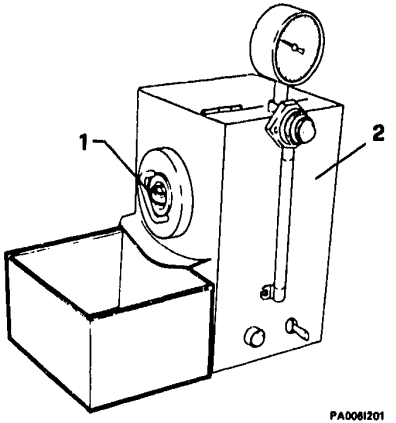

PA0061201

RADIATOR

Assy

1 Electric fan
2 Shroud
3 Gasket
4 Support
5 Breather pipe
6 Coolant outlet sleeve
7 Thermal contact
8 Gasket
9 Gasket
10 Rubber pad
11 Radiator
12 Coolant inlet sleeve
13 Clip
14 Washer
15 Rubber pads
16 Spacer
17 Washer
18 Clip
19 Flexible mounting
20 Spacer
21 Washer

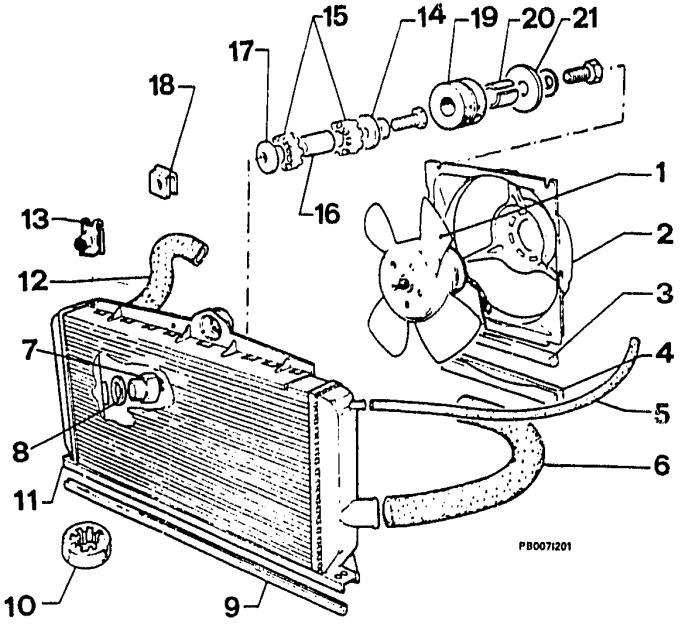

RADIATOR (continued)

Removal - Installation

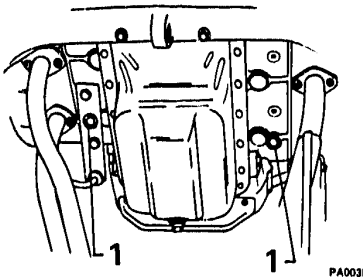

PA0031201

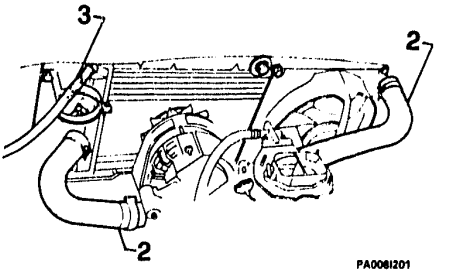

PA0061201

- Disconnect the battery negative cable.

1. Unscrew the plugs placed on the crankcase lower side and drain the coolant.
2. Loosen the clamps and disconnect the two water inlet and outlet sleeves from the radiator.
3. Slacken the clamp and remove the delivery pipe from the radiator.



Removal - Installation (Continued)

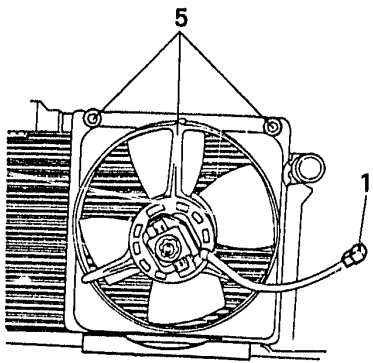

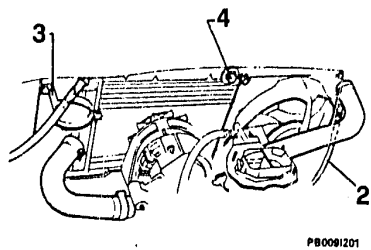

1. Disconnect electric fan connection.
2. Disconnect the two electrical connections from thermal contact.
3. Unscrew the nut securing the air intake support bracket and remove it.
4. Remove screws and associated washers securing radiator.
- Remove radiator from engine compartment.
5. Working at the bench, unscrew screws securing electric fan and then remove it sliding it out from its lower channel.

ELECTRIC FAN ENABLING THERMAL CONTACT

Replacement

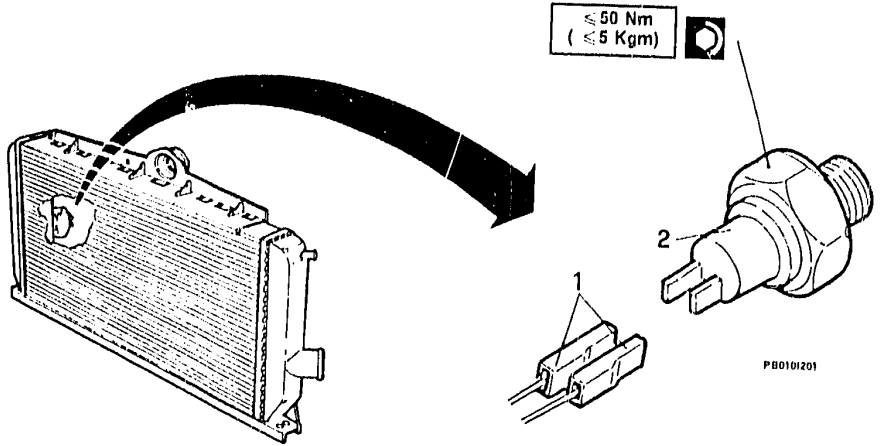

- Disconnect the battery negative cable.
- Completely drain the cooling circuit.

1. Unplug the electric connections.
2. Remove the thermal contact and check its setting. In the case of incorrect values, replace the thermal contact.

Electric fan actuating temperature	92 ± 2°C
Electric fan switching off temperature	87 ± 2°C

CIRCUIT TIGHTNESS CHECK

Hydraulic circuit tightness test

Hydraulic circuit check pressure
107.9 kPa (1.08 bar; 1.1 Kg/cm²)

- Unscrew the pressurized cap from the expansion tank.

1. Apply the hydraulic circuit test instrument to the expansion tank filler neck.
2. Apply pressure to the circuit and check on the test instrument that the pressure ranges within the prescribed limits.

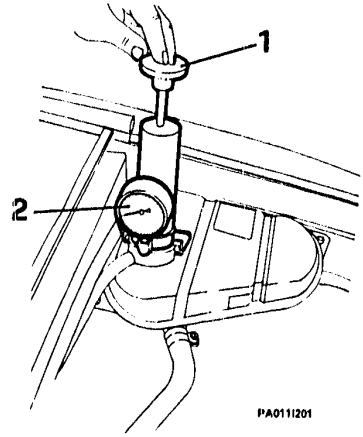

CIRCUIT TIGHTNESS CHECK (continued)

Pressurized cap tightness test

Pressurized cap set pressure
100 ± 10 kPa (1,0 ± 0,1 bar; 1,0 ± 0,1 kg/cm²)

1. Connect the union to the test instrument and apply it to the expansion tank pressurized cap.
2. Apply pressure and check on the test instrument that the bleed valve opens at the set pressure.

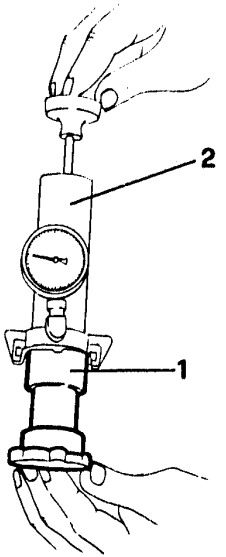

PA012I201

COOLING CIRCUIT REFILLING

The anti-freeze mixture is a product which may damage the paint. Avoid any contact with painted surfaces.

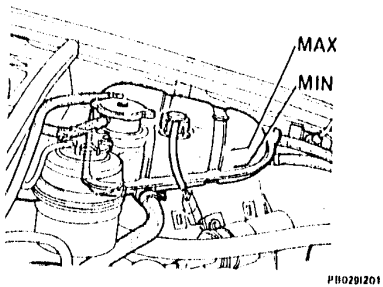

PB0291201

- After having drained the circuit, refill it with fluid in quantity and quality indicated in table.
- Refill the circuit till reaching the MAX. reference mark on the expansion tank.
- Start up the engine and let it reach the operating temperature, so that the thermostat opening bleeds the residual air contained in the circuit.
- At cold engine, top up till the level reaches the MAX. reference mark on the expansion tank.
- Refit the closure cap on the expansion tank.

Minimum temperature		-40°C
Concentrated antifreeze	Alfa Romeo Antifreeze	4,3 l (55%) 4,0 l (55%) (1)
Distilled water		3,5 l (45%) 3,3 l (55%) (1)
Ready-for-use antifreeze	Alfa Romeo Climafluid Permanent -40°C	7,8 l 7,3 l (1)
	IP Antifreeze	
	AGIPAntifreeze Extra	

(1) For Sport Wagon 4x4 and Sport Wagon 1.7 IE versions

TECHNICAL DATA AND SPECIFICATIONS

Cooling circuit

Check pressures KPa (bar; Kg/cm²)	- Pressurized cap setting	100 ± 10 (1,0 ± 0,1; 1,0 ± 0,1)
	- Circuit tightness	107,9 (1,08; 1,1)
Thermostatic valve	- Opening start temperature	84 – 88 °C
	- Max. opening temperature	98 °C
	- Valve stroke	≥ 7mm
Electric fan	- Actuating temperature	92 ± 2 °C
	- Switching off temperature	87 ± 2 °C

Coolant

Minimum temperature		- 40°C	
Concentrated antifreeze	Alfa Romeo Antifreeze	4,3 l (55%)	4,0 l (55%) (1)
Distilled water		3,5 l (45%)	3,3 l (45%) (1)
Antifreeze ready for use	Alfa Romeo Climafluid Permanent -40°C	7,8 l	7,3 l (1)
	IP Antifreeze		
	AGIP Antifreeze Extra		

(1) For Sport Wagon 4x4 and Sport Wagon 1.7 IE versions

SEALING AND FIXING COMPOUNDS

APPLICATION	TYPE	DENOMINATION	Q.TY
Sealing compound for cooling circuit	Sealing powder	AREXONS	10 g

TIGHTENING TORQUES

Item \ Unit of measure	Nm	Kgm
Water temperature transmitter on supply manifold	33 ÷ 41	3.4 ÷ 4.2
Water pump fixing screws	19 ÷ 24	1.9 ÷ 2.4
Water pump pulley fixing	5 ÷ 10	0.5 ÷ 1
Thermal contact for electric fan enabling	≤50	≤5

MICROFICHE INDEX

Microfiche 8/15 Groups: 04-05-07

- 16 valve electronic injection engine
- Turbodiesel engine



Group 04 – Fuel supply system

16 VALVE ELECTRONIC INJECTION ENGINE
INJECTION SYSTEM WIRING, AIR SUPPLY
SYSTEM ..... 04 - A
FUEL SUPPLY
CIRCUIT ..... 04 - B
FUEL VAPOUR EMISSION CONTROL
SYSTEM ..... 04 - C
CHECKS AND ADJUSTMENTS ..... 04 - D
ELECTRIC/ELECTRONIC COMPONENTS,
EXHAUST SYSTEM ..... 04 - E
TCS, SPECIFIC TOOLS ..... 04 - F
TURBODIESEL ENGINE
FUEL SUPPLY CIRCUIT
SUPERCHARGING SYSTEM ..... 04 - G
AIR FILTER, FUEL SUPPLY
SYSTEM ..... 04 - H
FUEL SUPPLY
SYSTEM (Continued) ..... 04 - I
FUEL SUPPLY
SYSTEM (Continued) ..... 04 - L
CALIBRATIONS AND ADJUSTMENTS,
EXHAUST SYSTEM ..... 04 - M
TCS, SPECIFIC TOOLS ..... 04 - N



Group 05 - Starting, charging system

16 VALVE ELECTRONIC INJECTION ENGINE
STARTING, CHARGING SYSTEM, TCS ..... 05 - O
TURBODIESEL ENGINE
STARTING, CHARGING SYSTEM, TCS ..... 05 - P



Group 07 - Engine cooling system

16 VALVE ELECTRONIC INJECTION ENGINE
COOLING CIRCUIT, TCS ..... 07 - Q
TURBODIESEL ENGINE
COOLING CIRCUIT, TCS ..... 07 - R

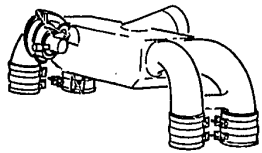

16 VALVE ELECTRONIC INJECTION ENGINE

INJECTION SYSTEM WIRING

AIR SUPPLY SYSTEM

INJECTION SYSTEM WIRING (MOTRONIC ML4.1 SYSTEM) ..... 04 - 1
DESCRIPTION ..... 04 - 3
IMPORTANT GENERAL INFORMATION ..... 04 - 8

AIR SUPPLY SYSTEM
AIR FILTER ..... 04 - 9
Assy ..... 04 - 9
Removal - Installation ..... 04 - 10
AIR FLOW METER ..... 04 - 11
Removal - Installation ..... 04 - 11
CONSTANT IDLE SPEED ACTUATOR ..... 04 - 12
Removal - Installation ..... 04 - 12
AIR INTAKE BOX ..... 04 - 13
Removal - Installation ..... 04 - 13

INJECTION SYSTEM WIRING (MOTRONIC ML4.1 SYSTEM)
TAB. 1

1 Air flow meter
2 Engine coolant temperature sensor
3 Injection main relay
4 Fuel pump relay
5 Fuel pump fuse
6 Vehicle wiring connection
7 Throttle valve min./max. opening switch
8 Ignition distributor
9 Ignition coil

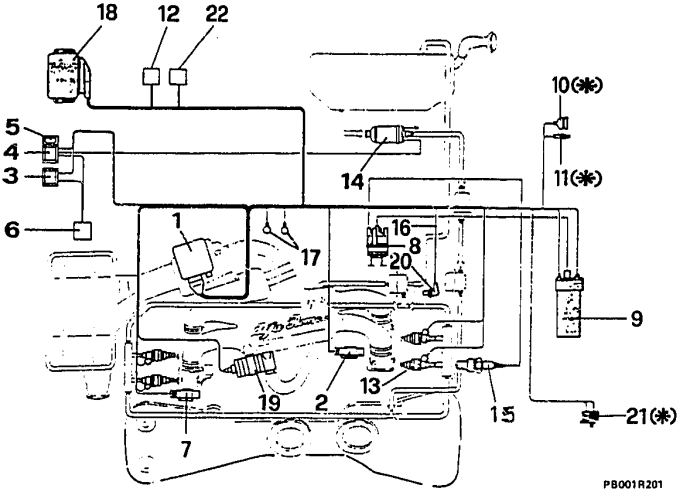

INJECTION SYSTEM WIRING (MOTRONIC ML4.1 SYSTEM) TAB. 2

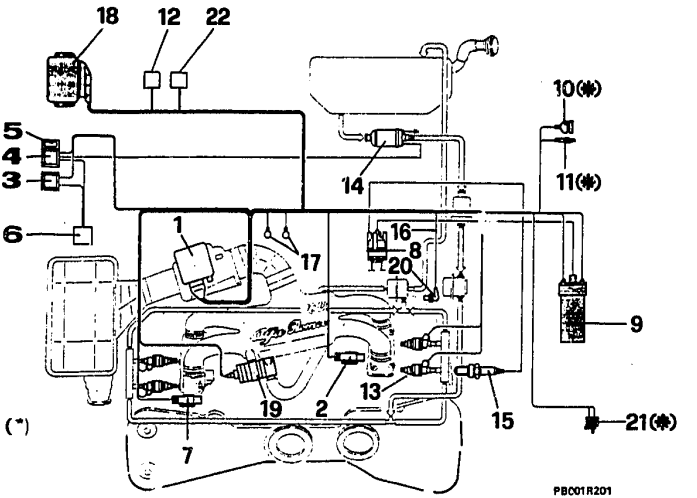

10 Lambda probe resistance connector (*)
11 Lambda probe signal connector (*)
12 "Flashing Code" testing connector
13 Electroinjectors
14 Fuel pump
15 Spark plugs
16 R.p.m. sensor cable
17 Centralized earthing points
18 MOTRONIC ECU
19 Constant idle r.p.m. actuator
20 Engine r.p.m. and timing sensor
21 Fuel vapour control solenoid valve (*)
22 Alfa Tester connector

(*) Only for vehicles with catalytic converter

DESCRIPTION

Through the electric pump 14and the filter, the fuel is sent from the fuel tank to the electroinjectors 13passing also through the pulse damper.
The pressure regulator, in relation to the air intake pressure detected inside the air intake box, adjusts the fuel pressure in the distributor pipe in order to keep the difference between fuel pressure and air intake box pressure at a constant level.
When the fuel pressure exceeds the maximum prefixed value (3 bar), the pressure regulator returns the fuel in excess to the fuel tank.
In this way, the fuel quantity to be injected only depends on the injection time established by the electronic control unit, 18by means of special sensors detecting the engine operating data, such as:
r.p.m., load, battery voltage, engine temperature, and so on.

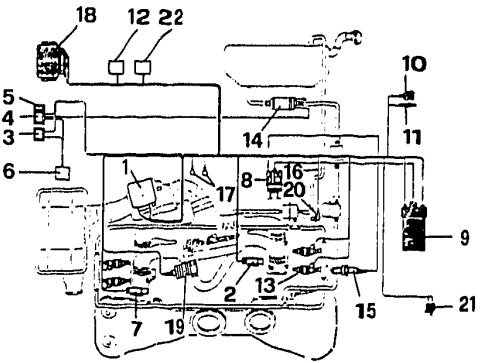

P8003R201

DESCRIPTION (continued)

The intaken air quantity is detected by the air flow meter **1**, the function of which is to determine the air flow-rate and send a corresponding signal to the electronic control unit, which will compute the correct fuel quantity to be injected.
A sensor for the detection of the intaken air temperature is installed inside the air flow meter.
Said sensor sends a signal to the electronic control unit, so that it may compensate for the injection time according to the variation of the air weight - fuel weight ratio.

The engine temperature is detected by the special sensor **2**, having its sensitive end directly dipped in the coolant.

The air enters the intake duct and, through the air flow meter **1**, reaches the throttle valve.

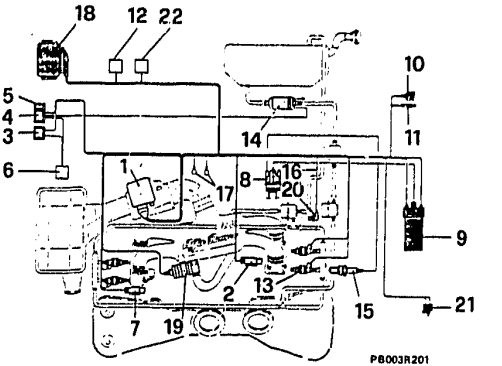

DESCRIPTION (continued)

One of the throttle valve bodies is provided with a switch 7, composed of two microswotches, one for the min. opening, sending a signal corresponding to a throttle valve opening from 0° (completely closed) to 1°, and one for the maximun opening, sending a signal of throttle valve opening angle greater than 55°.
The signals sent by the microswitches allow the control unit to control respectively the fuel cut-off when the accelerator pedal is released and the throttle valve is closed while the engine r.p.m. is higher than 1200, and the fuel enrichment when, upon a specific power need of the engine, the air flow meter signal exceeds a preset increase, thus causing not only an injection increase but also a further increase for a fast attainment of the required r.p.m.

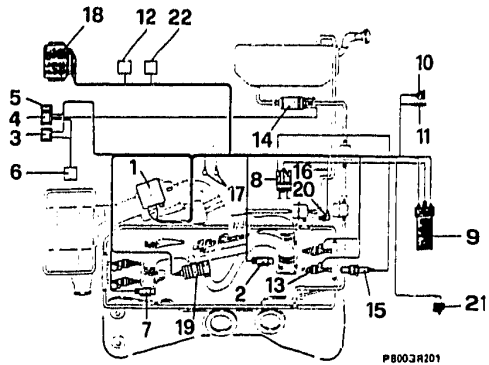

DESCRIPTION (continued)

The constant idle speed actuator **19** is installed on the air circuit, by-passing the throttle valve; its passage section determines, in throttle valve closed or slightly opened condition, an air flow which is not controlled by the accelerator but by a control signal sent by the electronic control unit. From the air filter, the intaken air crosses th air intake box and finally enters the cylinders through the intake manifold.

During cold start-up operations, the control unit checks the ignition advance and the injection time. The ignition advance only depends on the engine r.p.m. and temperature.

The injection time is obtained by a programmed value inside the control unit and is adjusted in relation to the detection of intaken air temperature, engine temperature, battery voltage and engine r.p.m.

The sensor dedicated to the engine r.p.m. and timing detection **20** is of inductive-type and its operation is linked to the variation of the magnetic field generated by the rotation of a toothed pulley (pulse emitting wheel) splined onto the engine flywheel.

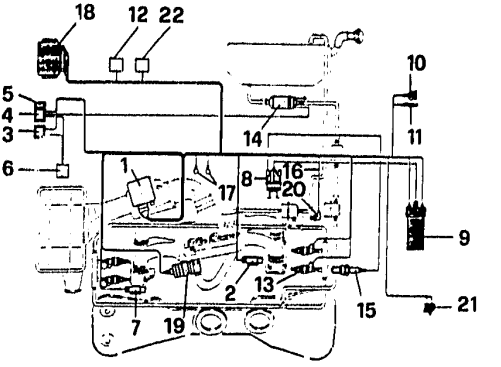

DESCRIPTION (continued)

Two missing teeth form a gap on the pulse emitting wheel which sends a reference signal to the electronic control unit: every tooth flank which follows determines the angular position of the crankshaft.
The ignition advance is calculated according to a program stored in the electronic control unit, in relation to the engine r.p.m. and load; the obtained values is optimized by considering the engine and intaken air temperatures.
The idle speed adjustment is controlled in all the operating conditions by the constant idle speed actuator, **19**.
The constant idle speed actuator has the task of adjusting the actual idle speed to the rated idle r.p.m. by acting on the four by-passes of the throttle valve.
The constant idle speed actuator **19** also acts as additional valve and regulator, when the air conditioning system is turned on.

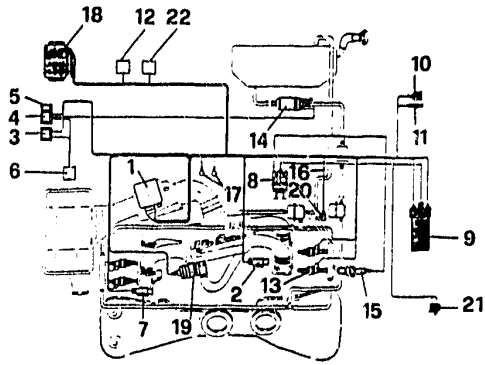

PB003R201

IMPORTANT GENERAL INFORMATION

- Never disconnect the battery when the engine is running or when the contact is made (ignition key set to "On" position); otherwise the electric and electronic components may be seriously and irreversibly damaged.
- Before starting up the engine, make sure the battery posts are properly tightened.
- Never make use of a "fast-charging" power supply unit to start up the engine.
- Completely disconnect the battery from the electrical system before recharging it.
- Do not start up the engine if some electric connections have been interrupted or some components have been removed from their seat.
- Never ground any of the high or low-voltage points and never interrupt any connection when the engine is running.
- In the case of installation of accessories on vehicle, it is always suggested to disconnect the electronic control units before proceeding to the accessory operational checks.It is strictly recommended not to shunt electric connections from the electronic control unit wirings.
- Before any intervention on the various system components, make sure that no connectors are unplugged, clamps unloosened, pipe cut or clogged.
- Never connect or disconnet the plug from the electronic control unit leads when the ignition contact is made.
- Make sure that shielded cable connectors are properly plugged in.
- Also make sure of the correct operating conditions of the ignition system, by checking the spark plugs, the distributor cap for humidity and cracks, the cables between coil and distributor and between distributor and spark plugs for proper connection and the insulating material in not burnt out or worn.
- In the case of fuse replacement, remove the key from the ignition switch; if a fuse repeatedly burns, troubleshoot the cause of the short-circuit and never replace the fuse with a cable piece.
  It is strictly recommended to replace the burnt fuse with a spare one bearing the same amperage.

AIR SUPPLY SYSTEM

AIR FILTER
Assy

1 Air filter cover
2 Clamp
3 Air flow meter
4 Corrugated sleeve
5 Filter box-to car body fixing screw
6 Air filter box
7 Rubber pad
8 Spacer
9 Air intake sleeve
10 Filtering element

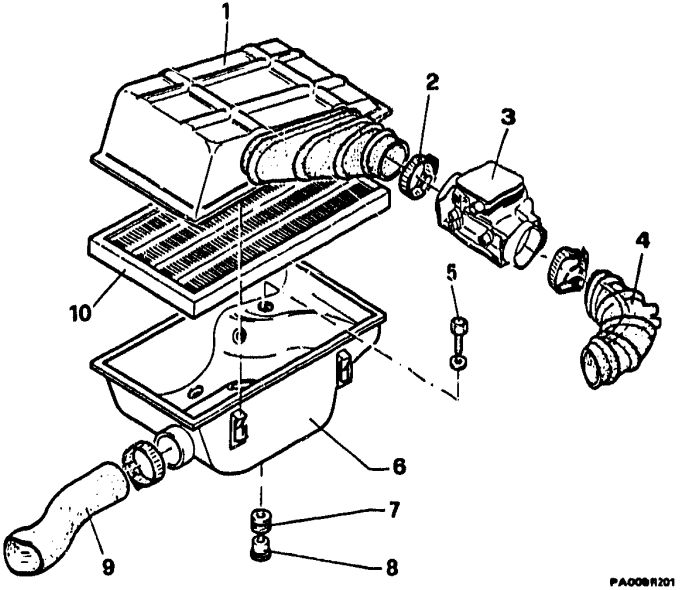

AIR FILTER (continued)
Removal - installation

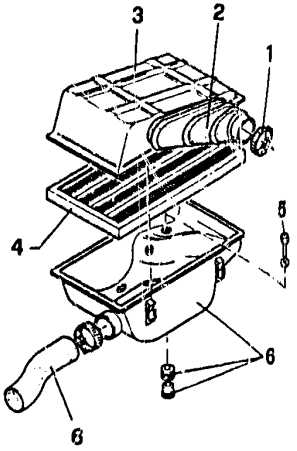

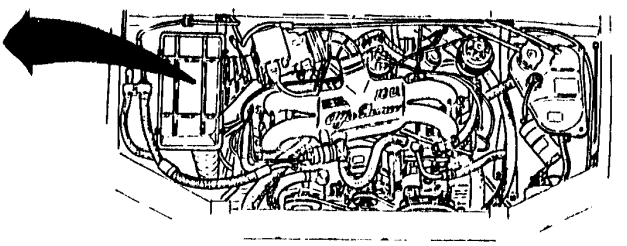

PA/110R201

1. Unloose the clamp.
2. Disconnect the sleeve from the cover on the air flow meter.
3. Release the four clips fixing the cover then remove the cover.
4. Remove the filtering element.
5. Unscrew the three screws fixing the air filter box to the car body.
6. Remove the air filter box along with the rubber pads and the spacers after having disconnected the sleeve from the air intake.

- When re-assembling, position the filtering element with its folded part facing downwards.

AIR FLOW METER

Removal - Installation

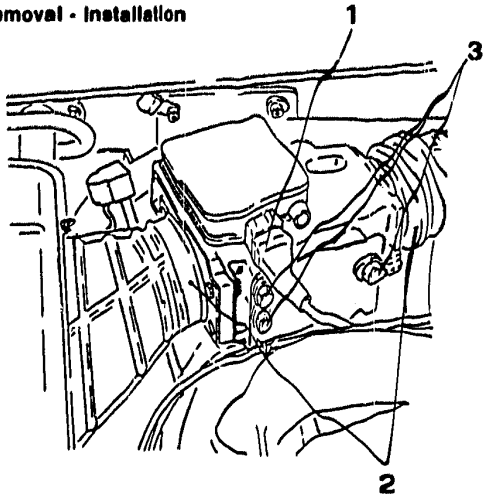

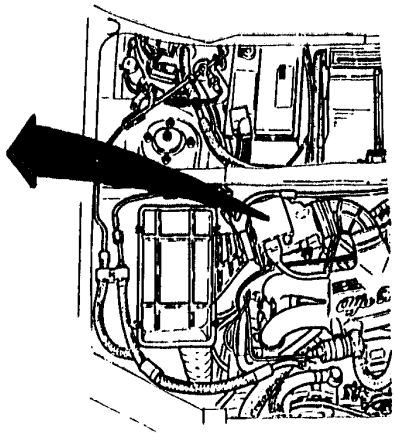

PA011R201

- Disconnect the battery negative cable.
1. Unplug the connector from the air flow meter.
2. Unloose the clamps fixing the sleeves, then disconnect them from the air flow meter.
3. Unscrew the three fixing screws and remove the air flow meter.

CONSTANT IDLE SPEED ACTUATOR
Removal - Installation

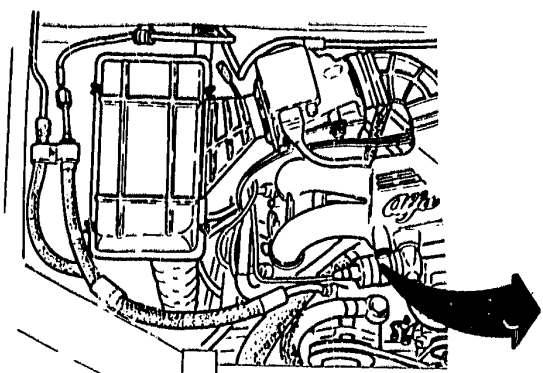

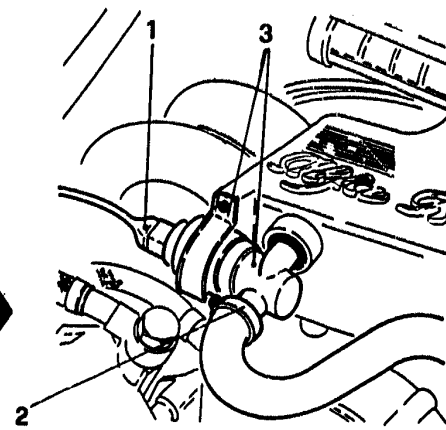

- Disconnect the battery negative cable.
1. Unplug the connector from the constant idle speed actuator.
2. Unloose the clamp and disconnect the pipe from the constant idle speed actuator.
3. Unloose the clamp and remove the constant idle speed actuator.

AIR INTAKE BOX
Removal - Installation

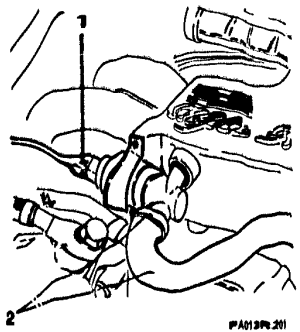

PA013R201



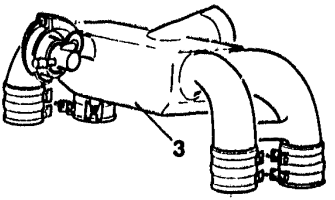

PA013R202

- Disconnect the battery negative cable.
1. Unplug the connector from the constant idle speed actuator.
2. Unloose the clamp and disconnect the pipe from the constant idle speed actuator.
3. Remove the air intake box together with the constant idle speed actuator by freeing the screws and clamps.

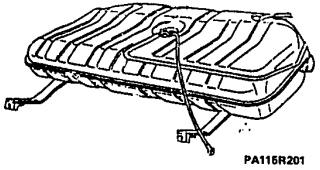

PA116R201

16 VALVE ELECTRONIC INJECTION ENGINE

FUEL SUPPLY CIRCUIT

FUEL SUPPLY CIRCUIT

ASSY ..... 04 - 14

FUEL TANK COMPLETE ASSY ..... 04 - 15

Removal - Installation ..... 04 - 15

Disassembly - Assembly ..... 04 - 17

CHECKS AND INSPECTIONS ..... 04 - 18

FUEL PUMP ..... 04 - 19

Removal - Installation ..... 04 - 19

PULSE DAMPER ..... 04 - 20

Removal - Installation ..... 04 - 20

ELECTROINJECTORS ..... 04 - 21

Removal - Installation ..... 04 - 21

PRESSURE REGULATOR ..... 04 - 22

Removal - Installation ..... 04 - 22

FUEL FILTER REPLACEMENT ..... 04 - 23

FUEL SUPPLY CIRCUIT
ASSY

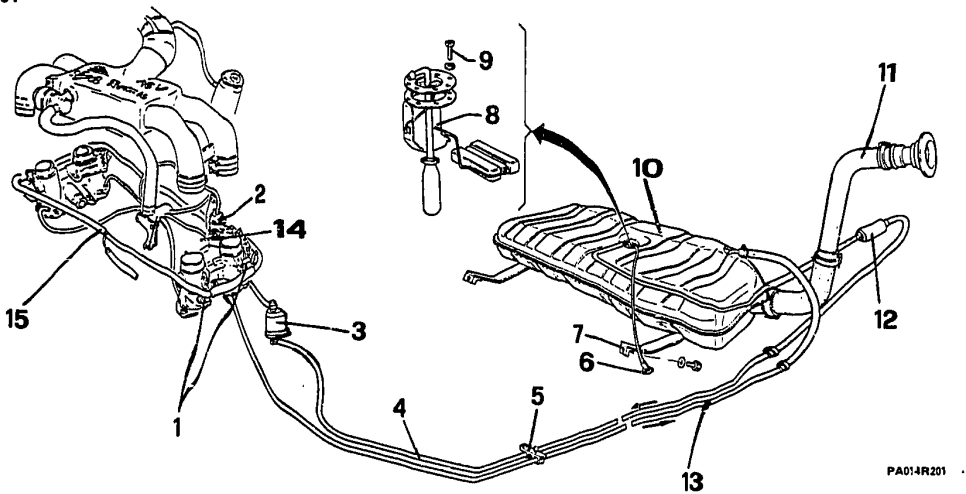

1 Electroinjectors
2 Pressure regulator
3 Fuel filter
4 Fuel delivery pipe
5 Pipe holding clamps
6 Ground cable
7 Fuel tank retaining strap
8 Float assy
9 Float assy fixing screws
10 Fuel tank
11 Filler hose
12 Fuel pump
13 Fuel excess return pipe
14 Pulse damper
15 Fuel distributor manifold

FUEL SUPPLY CIRCUIT (continued)

FUEL TANK COMPLETE ASSY

Removal - Installation

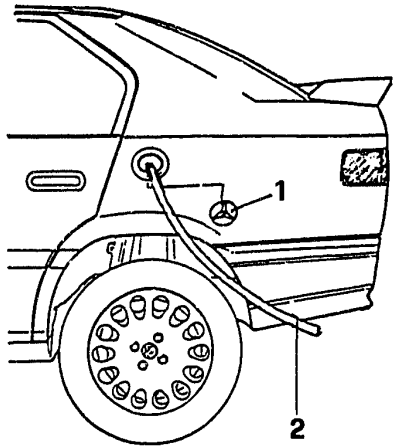

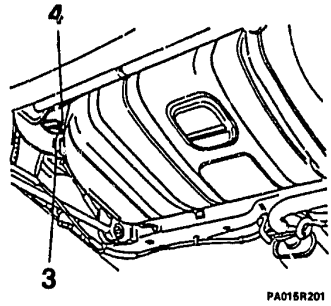

- Disconnect the battery negative cable.
1. Remove the plug from the fuel tank filler hose.
2. Suck the petrol out of the tank by using a special pump.
3. Unloose the clamp connecting the filler hose to the tank.
4. Unloose the clamp connecting the fuel supply pipe to the hose.

⇩

FUEL TANK COMPLETE ASSY

Removal - Installation (continued)

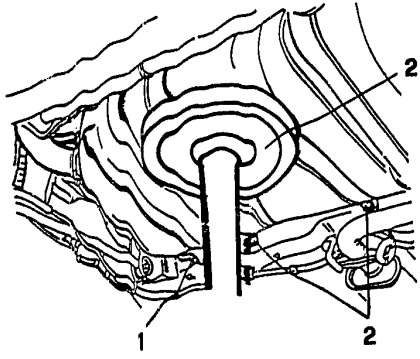

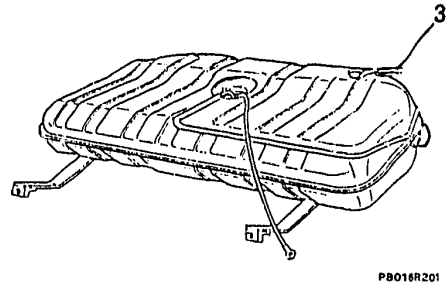

1. Unscrew and remove the screw fixing the ground cable to the car body.
2. Uphold the fuel tank by means of a column-type jack and unscrew the two screws of the straps securing the fuel tank to the car body.
- Slightly lower the column-type jack.
3. Detach the fuel excess return pipe.
- If necessary, remove the fuel supply piping by unloosing the connecting clamps and releasing the pipes from the holding clamps.

FUEL TANK COMPLETE ASSY (Continued)

Disassembly - Assembly

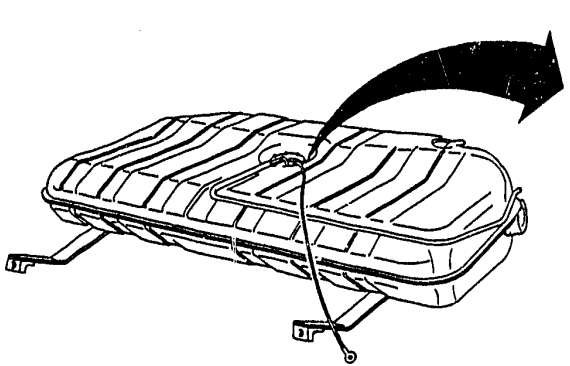

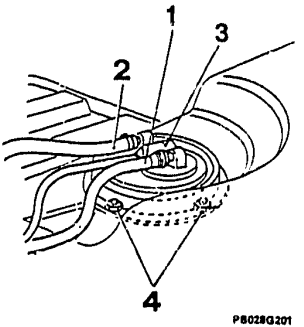

1. Disconnect the fuel delivery pipe from the filler neck on the float.
2. Disconnect the fuel return pipe from the filler neck on the float.
3. Disconnect the electrical wiring from the float.
4. Unscrew the six screws securing the float to the tank, then remove the float with its gasket.

- When reassembling, replace the gasket with a new one.

FUEL SUPPLY CIRCUIT (continued)

CHECKS AND INSPECTIONS

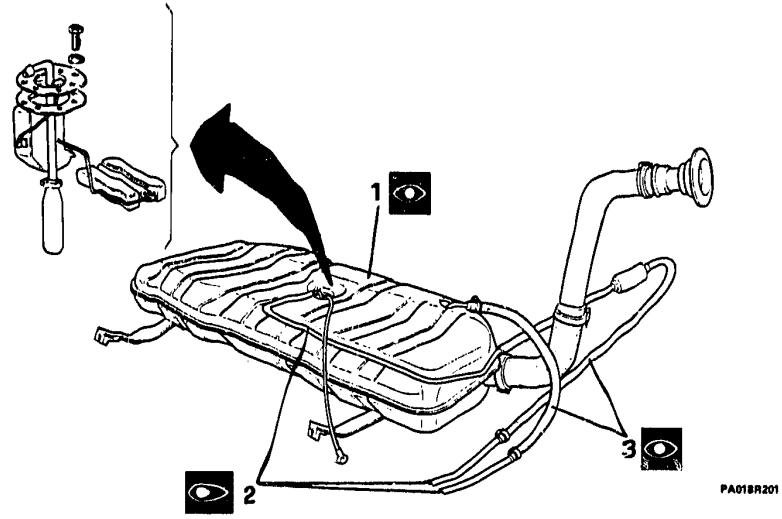

1. Check the fuel tank for integrity.
2. Check that the tubes are not oxydized, clogged or dented.
3. Check that the hoses are not porous and show no signs of wear or cracks.

FUEL SUPPLY CIRCUIT (continued)

FUEL PUMP

Removal - Installation

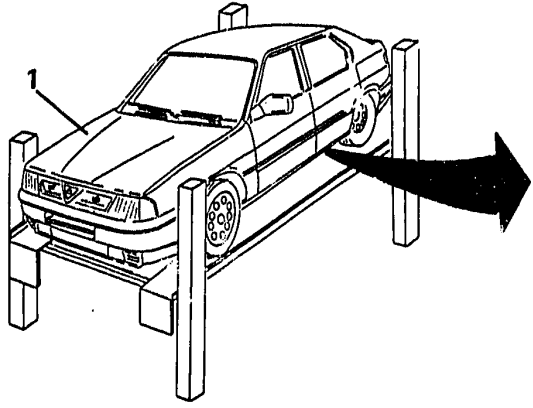

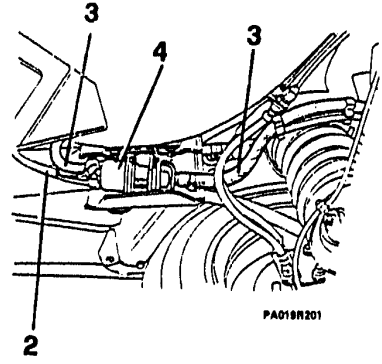

1. Place the vehicle on a lift platform and disconnect the battery negative cable.
2. By operating under the vehicle, disconnect the supply hoses from the fuel pump.
3. Using pliers, squeeze the fuel inlet and outlet pipes, then disconnect them after unloosing the relevant clamps.
4. Unloose the clamp and remove the pump.

FUEL SUPPLY CIRCUIT (continued)

PULSE DAMPER

Removal - Installation

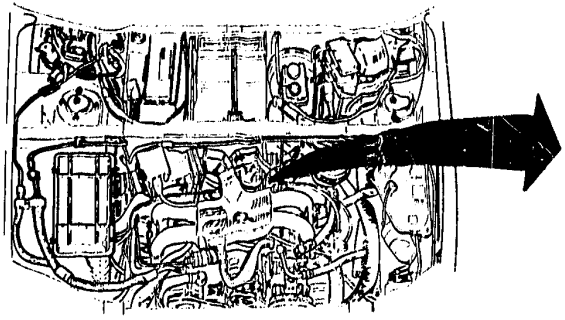

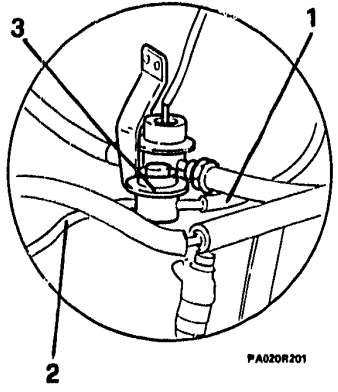

1. Unloose the clamp and disconnect the fuel inlet pipe from the pulse damper.
2. Unloose the clamp and disconnect the outlet pipe from the pulse damper.
3. Unscrew the fixing nut and remove the pulse damper from the supporting bracket.

FUEL SUPPLY CIRCUIT (continued)

ELECTROINJECTORS

Removal - Installation

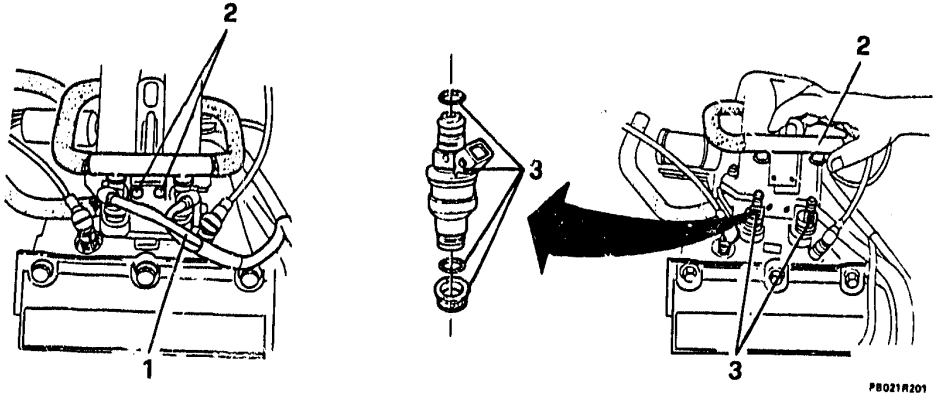

- Disconnect the battery negative cable.
1. Unplug the power supply connectors from the electroinjectors.
2. Unscrew the fixing screws and lift the fuel distributor manifold, after having released it from the electroinjectors.
3. Remove the electroinjectors complete with O-rings and gaskets.
- When re-assembling, replace the O-rings and gaskets.

FUEL SUPPLY CIRCUIT (continued)

PRESSURE REGULATOR

Removal - Installation

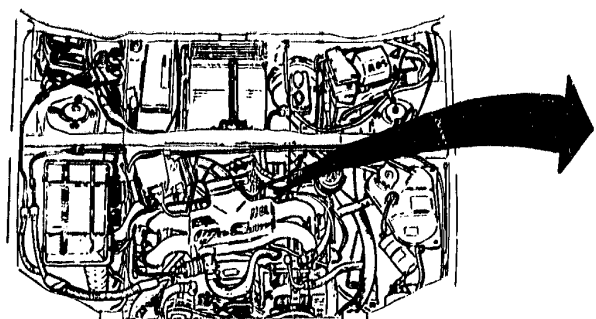

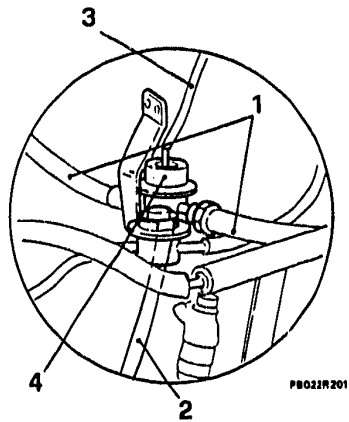

Operate with caution, the fuel supply circuit could be under pressure.

1. Detach the two unions connecting the fuel distributor manifold to the pressure regulator.
2. Disconnect the excess fuel return pipe.
3. Disconnect the vacuum intake hose from the regulator.
4. Unscrew the fixing nut and remove the pressure regulator.

FUEL SUPPLY CIRCUIT (continued)

FUEL FILTER REPLACEMENT

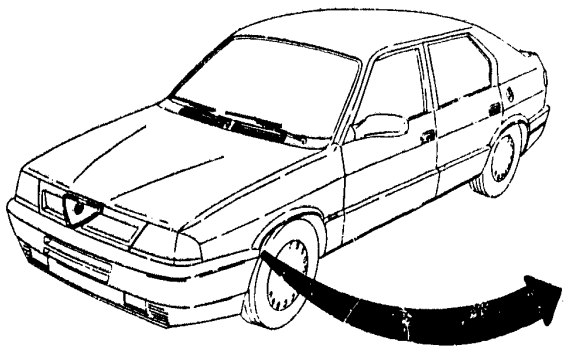

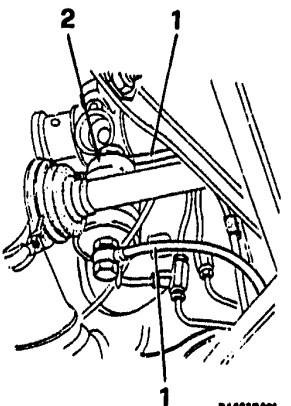

1. Unscrew the connections of the fuel inlet and outlet hoses and recover the gaskets.

Suitably plug the unions to prevent fuel leakages.

2. Unloose the clamp and remove the filter.

Install a new filter, paying attention that the arrow engraved on the filter body is pointed in the fuel delivery direction.

- Complete the fuel filter assembly by reversing the order of the removal operations.

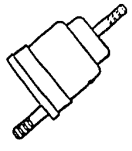
PA116R201

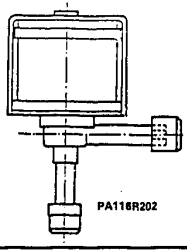
PA116R202

16 VALVE ELECTRONIC INJECTION ENGINE

FUEL VAPOUR EMISSION CONTROL SYSTEM

FUEL VAPOUR EMISSION CONTROL SYSTEM (Specific for vehicles equipped with catalytic converter) ..... 04 - 24
DESCRIPTION ..... 04 - 26
FUEL VAPOUR SEPARATOR ..... 04 - 28
Removal - Installation ..... 04 - 28
COMPENSATING VALVE ..... 04 - 29
Removal - Installation ..... 04 - 29
SOLENOID VALVE ..... 04 - 30
Removal - Installation ..... 04 - 30
CARBON CANISTER ..... 04 - 31
Removal - Installation ..... 04 - 31

FUEL VAPOUR EMISSION CONTROL SYSTEM
(Specific for vehicles equipped with catalytic converter)

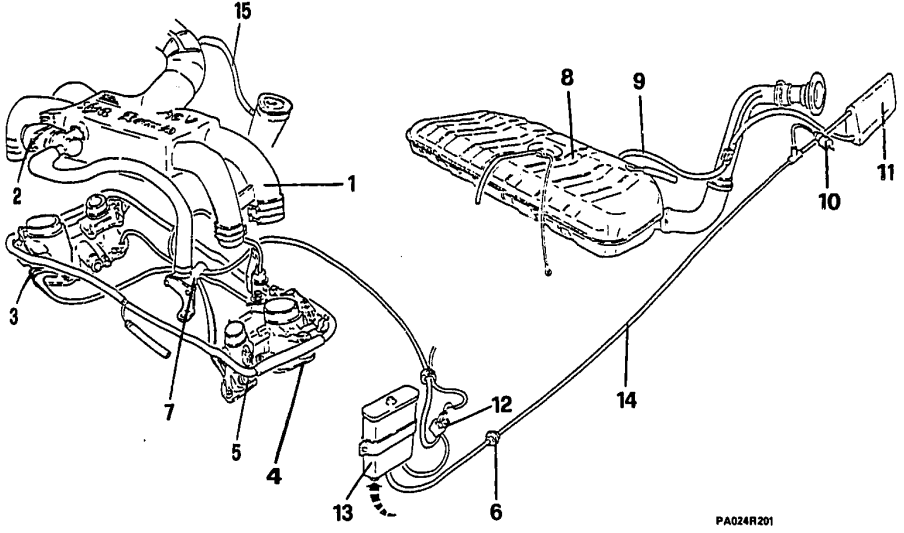

1 Air intake box
2 Constant idle speed actuator.
3 Throttle valve min. and max. opening switch
4 Left fuel supply manifold
5 Electroinjector
6 Check valve
7 Multiple union for idle speed air intake
8 Fuel tank

FUEL VAPOUR EMISSION CONTROL SYSTEM
(Specific for vehicles equipped with catalytic converter) (continued)

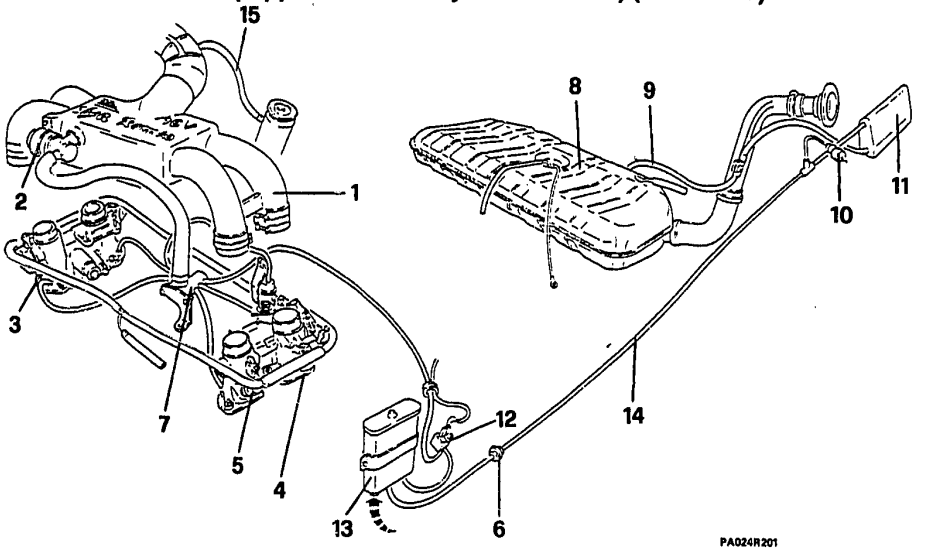

9 Fuel vapour pipe
10 Compensating valve
11 Fuel vapour separator
12 Solenoid valve
13 Carbon canister
14 Fuel vapour recycling pipe
15 Oil vapour blow-by pipe

DESCRIPTION

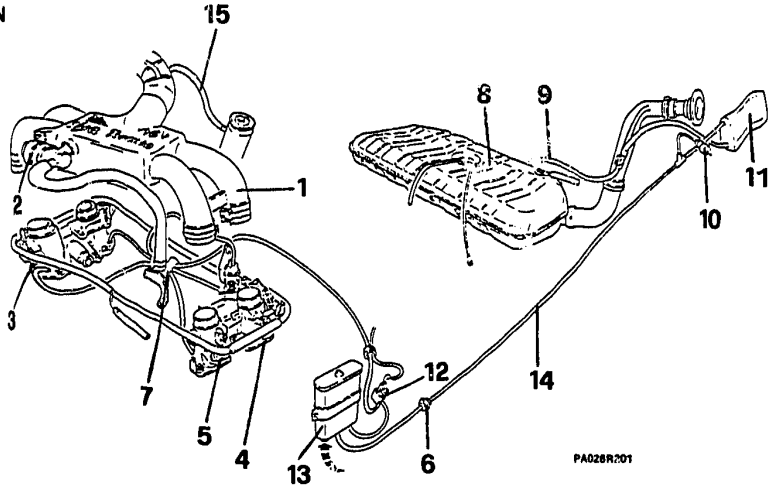

The fuel vapour emission of the tank **8** are collected, through a special piping **9**, in a liquid - vapour separator **11** which, thanks to its structure, allows the condensed fuel to return into the fuel tank.

To prevent fuel vapour emissions into the atmosphere, a pressurized fuel tank cap has been specially designed.

The fuel vapours from the separator **11** are sent to the fuel filter **13** through the upper outlet.

On the piping between the separator **11** and the carbon canister **13** a check valve **6** has been installed, with the task of avoiding fuel leakages in the case of vehicle overturning.

The fuel vapour flow to the carbon canister **13** is controlled by a solenoid valve **12** which opens or closes the passage towards the multiple union **7** in relation to the signal sent by the Motronic control unit.

DESCRIPTION (continued)

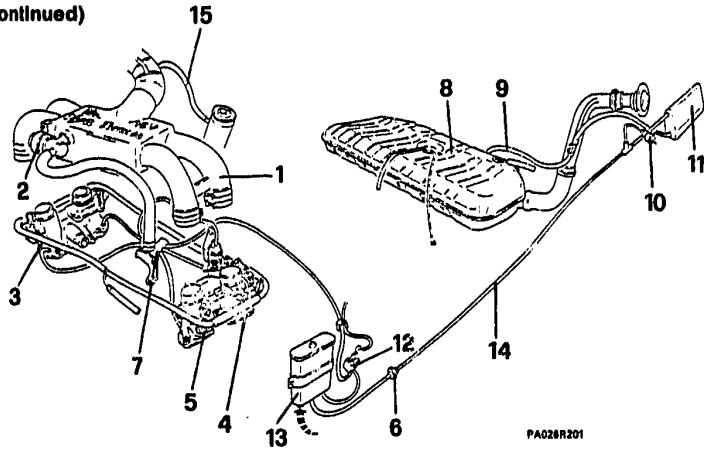

If the vacuum pressure is lower than a pre-established value (example: engine turned off or idling) the solenoid valve remains closed and prevents the vapour flow from entering the manifold.
In normal engine operating conditions, the vapour flow can enter the carbon canister **13** to be absorbed by the activated carbon and, due to the pressure difference, the carbon is "washed" by the air stream flowing through the filter after entering from a special hole.

During the "washing" action, the fuel vapours mixed with the atmospheric air, are conveyed into the supply manifold and added to engine supply air.

Should the pressure tend to drop, after the engine has been turned off, in the fuel vapour separator, due to a temperature decrease, a compensating valve **10** placed on the recycling pipe **14** between separator **11** and carbon canister **13**, allows the introduction of outside air, thus keeping the system at the atmospheric pressure.

FUEL VAPOUR SEPARATOR

Removal - Installation

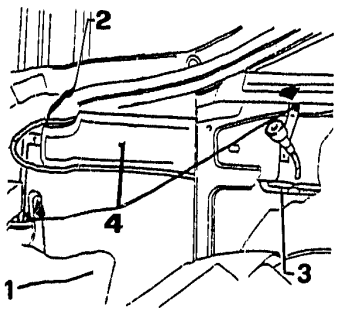

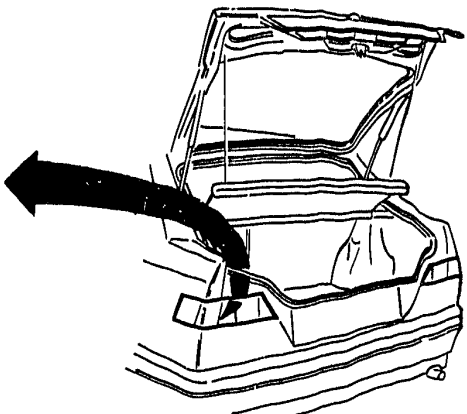

1. Move aside the boot left-side trim.
2. Unloose the clamp and disconnect the fuel vapour recycling pipe from the separator.
3. Unloose the clamp and disconnect the breather pipe from the separator.
4. Unscrew the two fixing nuts and remove the separator.
- If necessary before the installation, blow compressed air inside the separator to clean it.

COMPENSATING VALVE

Removal - Installation

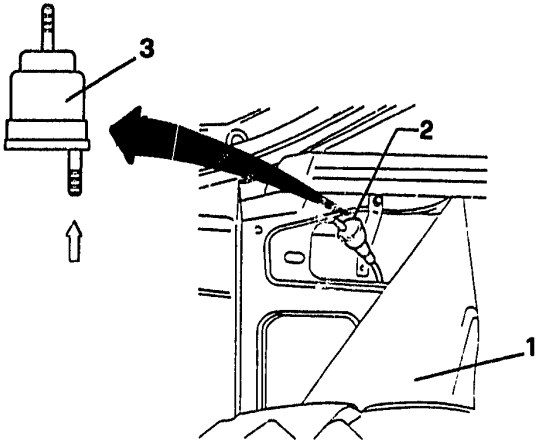

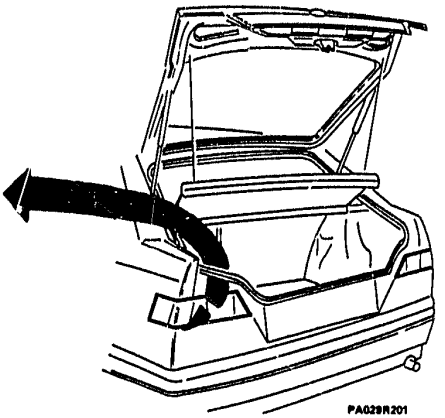

1. Partially move aside the boot left-side trim.
2. Disconnect the valve from the fuel vapour recycling pipe.
3. Check the valve correct operation, that is the air passage must be allowed only from the indicated direction, otherwise replace the valve.

SOLENOID VALVE
Removal - Installation

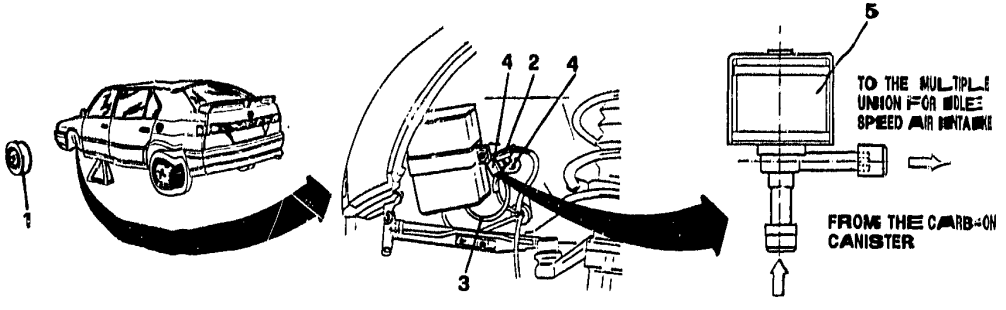

- Disconnect the battery negative cable.
1. Remove the front left-hand wheel.
- Remove the wheel housing.
2. Unplug the two electric connections.
3. Detach the two pipes of the fuel vapour emission control system.
4. Unscrew the fixing screw and remove the solenoid valve.
5. When re-assembling, pay attention to connect the two pipes of the fuel vapour emission control system as indicated.

CARBON CANISTER
Removal - Installation

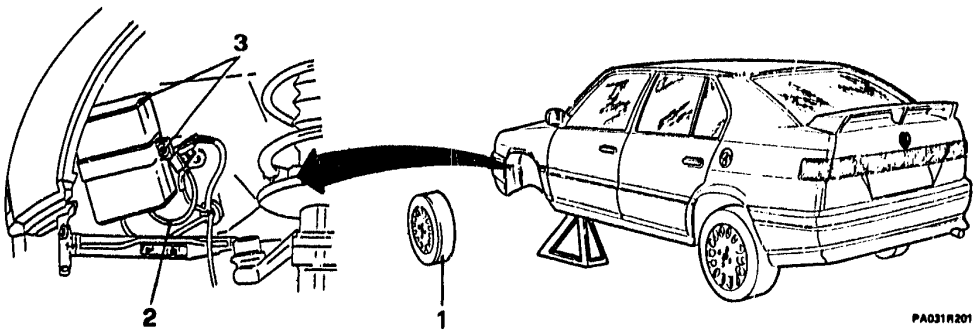

1. Remove the front left-hand wheel.
   - Remove the wheel housing.
2. Disconnect the pipes of the fuel vapour emission control system.
3. Unloose the screw and remove the carbon canister.

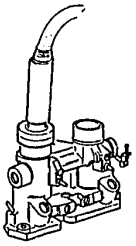

16 VALVE ELECTRONIC INJECTION ENGINE

CHECKS AND ADJUSTMENTS

CHECKS AND ADJUSTMENTS

FLOW TEST ON BENCH ..... 04 - 32
FLOW TEST ON VEHICLE ..... 04 - 33
THROTTLE VALVE BODY ALIGNMENT AND SYNCHRONISM ..... 04 - 35
THROTTLE VALVE SWITCH ..... 04 - 36
SEALING OF FUEL VAPOUR EMISSION CONTROL SYSTEM ..... 04 - 37
CHECKING FUEL DELIVERY PRESSURE AND SEALING ..... 04 - 39
CHECKING AND ADJUSTING EXHAUST EMISSIONS (Specific for models without catalytic converter) ..... 04 - 41
CHECKING AND ADJUSTING EXHAUST EMISSIONS (Specific for models with catalytic converter) ..... 04 - 43
Sampling downstream of the catalytic converter .... 04 - 43
Sampling upstream of the catalytic converter ..... 04 - 44

CHECKS AND ADJUSTMENTS

FLOW TEST ON BENCH

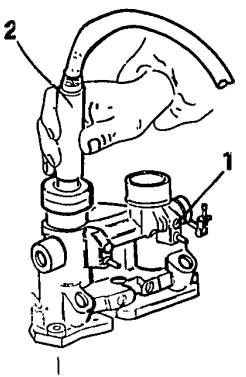

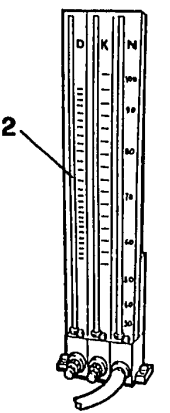

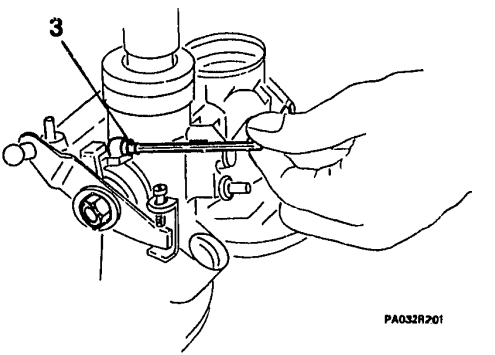

1. Remove the seals on the by-pass screws and screw them down completely.
2. Set the flow meter to the "K" scale.
3. Act on the throttle valve adjusting screw till reaching a value of 120 ÷ 130.

- After having adjusted the throttle valves, open the by-pass (by unscrewing) and check that the flow is 185 ÷ 190 on "N" scale.

CHECKS AND ADJUSTMENTS (continued)

FLOW TEST ON VEHICLE

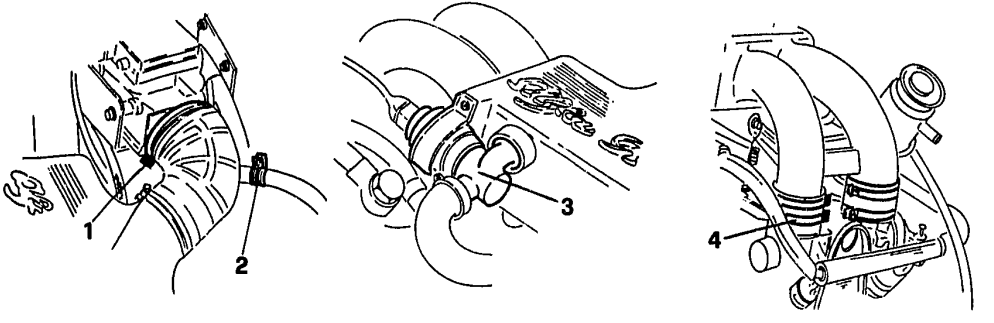

PA033R201

- Disconnect the battery negative cable.
1. Unloose the clamp on the corrugated sleeve, air flow meter-side.
2. Unloose the clamp on the oil vapour recycling pipe.
3. Remove the constant idle speed actuator from the intake air box.
4. Unloose the 4 lower clamps blocking the throttle valve intake air box and remove the box.

CHECKS AND ADJUSTMENTS

FLOW TEST ON VEHICLE (continued)

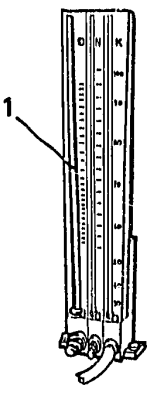

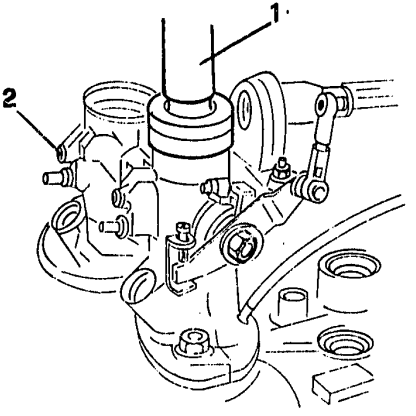

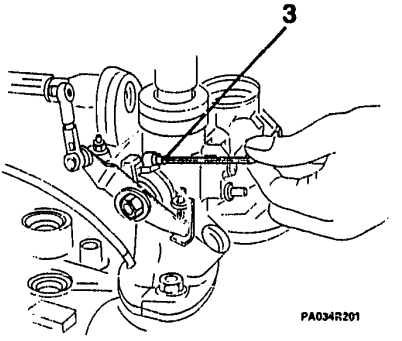

1. Using an air flow meter, perform the measuring on the throttle valve intake air boxes. Check that the air flow value ranges within 185 ÷ 190 on "N" scale.
- In case the prescribed values are not met, proceed as follows:
2. Remove the seals on the by-pass screws.
- With the air flow meter set to "K" scale, check that the air flow ranges within: 120 ÷ 130.
3. Should the value be out of the specified range, act on the throttle valve adjusting screw.
- After having adjusted the throttle valves, open the by-pass till obtaining a value of 185 ÷ 190 on "N" scale.
- Perform the throttle valve body alignment and synchronism.

CHECKS AND ADJUSTMENTS (continued)

THROTTLE VALVE BODY ALIGNMENT AND SYNCHRONISM

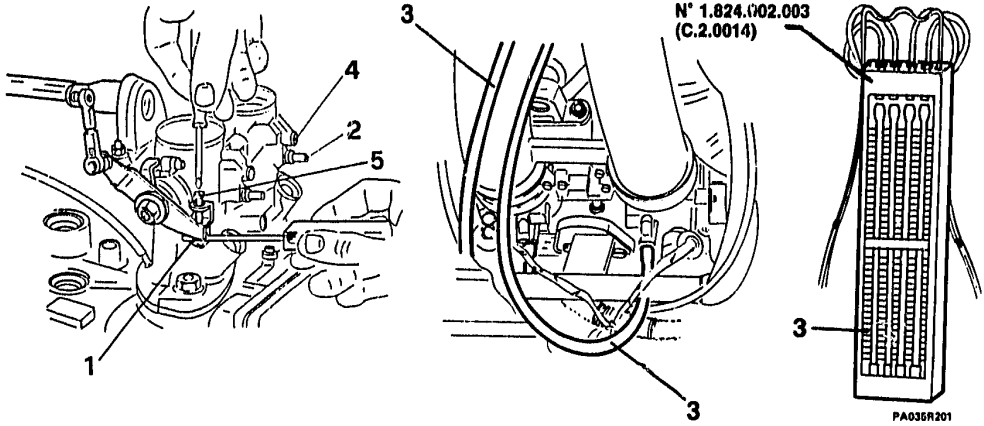

1. Check the play of the two slackened levers. Prescribed value: 1 mm.
2. Unloose the vacuum pressure intakes.
3. Connect the intakes to a vacuum pressure meter N° 1.824.002.000 (C.2.0014).
4. With the engine idling, check that the difference between the cylinders does not exceed 25 mm otherwise act on the by-pass screws.
   - Should the difference between cylinders of the same bank exceed 25 mmHg, despite the adjustment, replace the throttle valve body.
5. Speed up slightly for a few times and check for a simultaneous reaction of the pressure gauge columns: in the case of lack of synchronism, act on the adjusting screws of the slackened levers.

CHECKS AND ADJUSTMENTS (continued)

THROTTLE VALVE SWITCH

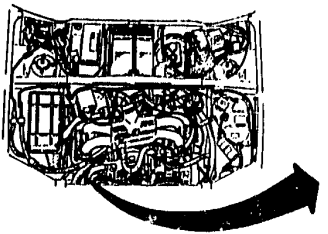

PA036R201

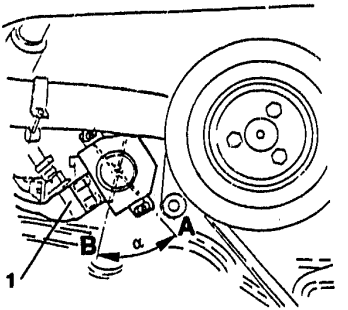

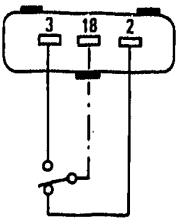

PA036R202

1. Unplug the connector from the throttle valve switch.
- Apply the multimeter prods to therminals 2 and 18 and check for electrical continuity (0 Ω) when the throttle valve opening angle is 0° (completely closed). Slowly rotate the throttle valve till reading a resistance of ∞ before hte rotation angle is 1°.

NOTE: Otherwise, unloose the two fixing sacrews and rotate the switch till restoring the correct position.

- Fully rotate the throttle valve at an angle of α 55° ± 4° apply the multimeter prods to terminals 3 and 18: the multimeter shall read electrical continuity (0 Ω).

NOTE: Otherwise, check the accelerator control or replace the switch.

CHECKS AND ADJUSTMENTS (Continued)

SEALING OF FUEL VAPOUR EMISSION CONTROL SYSTEM

To perform a tightness check, make use of equipment No. 1.824.013.000 (C.2.0126) and No. 1.824.020.000 (C.4.0101) composed of pressure gauge (A), needle adjusting valve (B) and T-union pipings (C):

- Fully tighten the cocks of reducer No. 1.824.013.000 (C.2.0126) and valve B.

1. Connect the union of the equipment No. 1.824.013.000 (C.2.0126) to a compressed air source.
2. Connect piping C to the air inlet valve placed in the boot compartment.
3. By acting on reducer No. 1.824.013.000 (C.2.0126) reduce the circuit pressure to approx. 0.2 bar (20 kPa).
4. Slightly open valve B.
5. By acting on reducer No. 1.824.013.000 (C.2.0126) adjust the pressure in the fuel vapour circuit to the value of: 0.025 bar (2,49 kPa), corresponding to 250 mm on pressure gauge A column.

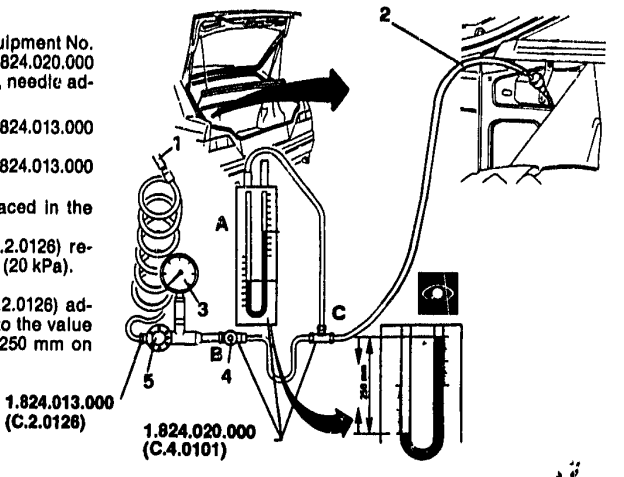

SEALING OF FUEL VAPOUR EMISSION CONTROL SYSTEM (Continued)

1. Wait for approx. 2 minutes and tighten valve b, thus stabilising the pressure in the circuit to the prescribed value.
2. Measure the pressure drop in the circuit, in 10 minutes it should not exceed the value of 0.0012 bar (0.12 kPa), that is a drop of 12 mm on the pressure gauge column.

- If the pressure drop exceeds the prescribed values, locate the leakages by spraying soaped water in the connecting and union points of the circuit: the formation of bubbles will denounce the presence of leakages.
- If necessary, replace the faulty components and repeat the tightness check.

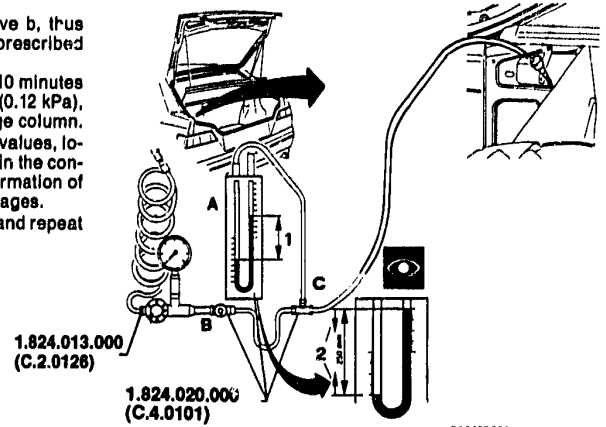

CHECKS AND ADJUSTMENTS (continued)

CHECKING FUEL DELIVERY PRESSURE AND SEALING

1. Disconnect the fuel delivery pipe downstream the pulse damper.
2. By means of a T adapter, connect a pressure gauge between the pulse damper and the previously disconnected pipe.
3. Detach the pressure regulator pipe. This is to avoid that any possible irregular run of the idle speed may negatively affect the readings.

- Start up the engine: at idle speed check that fuel pressure value is as prescribed.
- Re-connect the pipe to the pressure regulator; at idle speed, the fuel pressure must drop by approx. 0.5 bar and thenincrease again when the throttle valve opens. If that does not take place, troubleshoot the vacuum pressure pipe for leakages.

Fuel pressure
280 ÷ 320 KPa (2.8 ÷ 3.2 bar ; 2.9 ÷ 3.3 Kg/cm²)

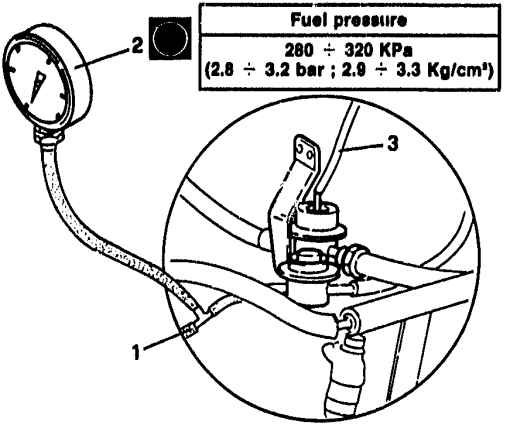

PA041R201

CHECKING FUEL DELIVERY PRESSURE AND SEALING (Continued)

1. By keeping the pressure gauge connected and the engine at idle speed, squeeze the delivery pipe downstream the pressure regulator while measuring the pressure increase up to the maximum check value (do not exceed the maximum value).
- At the pressure of 2.5 bar, check that the unions and fuel supply hoses do not show traces of leakages.
- If the fuel pressure does not reach the above-mentioned value and no leakages are detected, check the filter and/or the correct pump operation.

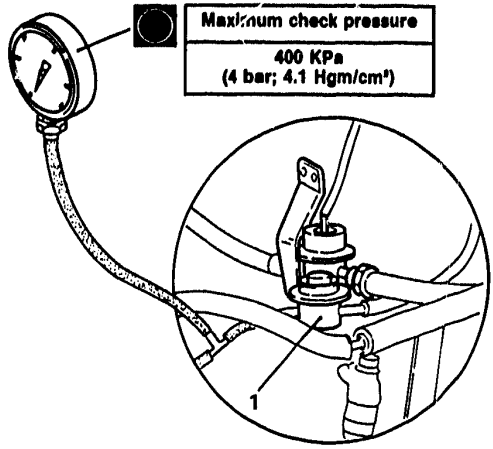

PA042R201

CHECKS AND ADJUSTMENTS (continued)

CHECKING AND ADJUSTING EXHAUST EMISSIONS

Specific for models without catalytic converter

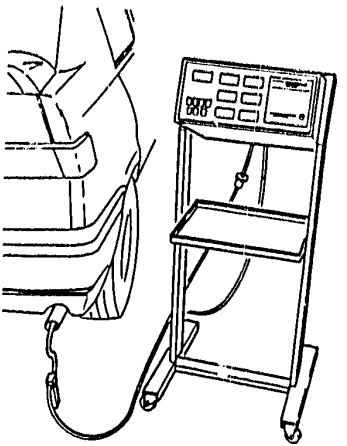

Switch the workshop toxic gas extractor on, start the engine of the vehicle and run it to normal operating temperature.

- Using a suitable exhaust gas analyzer and with the engine at idle speed, check that the percentage of CO leaving the exhaust pipe is below the specified limits.

permitted %CO in volume	0.5 - 1.5

CHECKING AND ADJUSTING EXHAUST EMISSIONS

Specific for models without catalytic converter (Continued)

- If the percentage of CO is above the specified limits, proceed as follows:

1. Remove the seal cap.
2. Carefully adjust the regulation screw until the correct values are reached.

- Refit the seal cap.
- Check that the engine idle r.p.m. is within the specified limits. If it is not then proceed to the section "Checking idle speed".

The percentage of exhaust CO should be adjusted, when necessary, only when the air flow meter and/or the electronic control unit have been replaced.

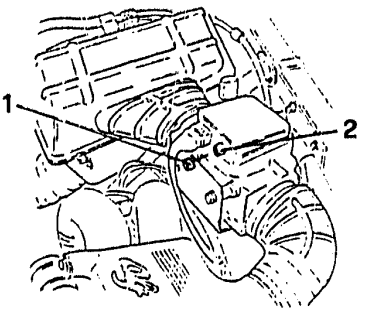

CHECKING AND ADJUSTING EXHAUST EMISSIONS (continued)

Specific for models with catalytic converter

Sampling downstream of the catalytic converter.

Switch the workshop toxic exhaust gas extractor on, start the engine of the vehicle and run it to normal operating temperature.

- Using a suitable exhaust gas analyzer and with the engine at idle speed check that the percentage of CO and the quantity of hydrocarbons (HC) leaving the exhaust pipe is below the specified limits.

%CO in volume	≤ 0.5
HC	≤ 50 p.p.m.

- If the values measured are above the specified limits this may be due to the supply components, lambda probe and/or an inefficient catalytic exhaust.

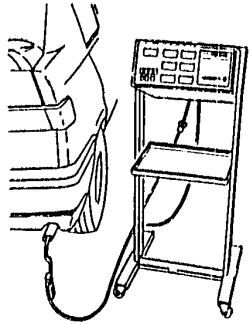

It is not possible to periodically adjust the idle speed exhaust emissions on the Motronic ML4.1 in this configuration.
If this check results in readings which are not within the specified limits and the vehicle has no mechanical faults it is probable that there is a fault in the electrical circuitry. In this case it will be necessary the carry out the diagnosis procedure using the appropriate tester. If this check still results in anomalous readings it will be necessary to replace the faulty components.

CHECKING AND ADJUSTING EXHAUST EMISSIONS

Specific for models with catalytic converter (Continued)

Sampling upstream of the catalytic converter

- Disconnect the wiring from the lambda probe.

1. Using spanner N° 1.822.011.000 (A.5.0212) unscrew the cap located at the beginning of the catalytic exhaust.
2. Install tool N° 1.024.007.000 (C.2.0051) on the connection for sampling the exhaust gas and connect it using a pipe, to the exhaust gas analyzer.

- Start the engine and check that the percentage of CO and the quantity of unburnt hydrocarbons at idle speed is below the permitted level.
- If the values measured are above the specified limits the cause may be looked for in the supply components.

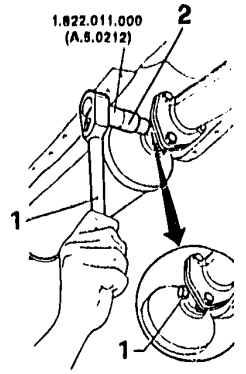

%CO in volume	0.6 - 1.0
HC	≤ 300 p.p.m.

⚠ **It is not possible to periodically adjust the idle speed exhaust emissions on the Motronic ML4.1 in this configuration.**
If this check results in readings which are not within the specified limits and the vehicle has no mechanical faults it is probable that there is a fault in the electrical circuitry. In this case it will be necessary the carry out the diagnosis procedure using the appropriate tester. If this check still results in anomalous readings it will be necessary to replace the faulty components.

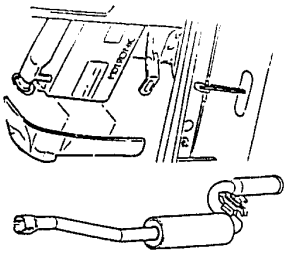

16 VALVE ELECTRONIC INJECTION ENGINE

ELECTRIC/ELECTRONIC COMPONENTS EXHAUST SYSTEM

ELECTRIC/ELECTRONIC COMPONENTS

ELECTRONIC CONTROL UNIT ..... 04 - 45
THROTTLE VALVE SWITCH ..... 04 - 46
REMOVAL/REFITTING THE R.P.M. AND TIMING SENSOR ..... 04 - 47
CHECKING ENGINE R.P.M. AND TIMING SENSOR AIR GAP ..... 04 - 48

EXHAUST SYSTEM (for vehicles with catalytic converter)

ASSY ..... 04 - 50
FRONT PART ..... 04 - 51
CENTRAL PART ..... 04 - 52
REAR PART ..... 04 - 53
LAMBDA PROBE REPLACEMENT ..... 04 - 54

EXHAUST SYSTEM (for vehicles without catalytic converter)

ASSY ..... 04 - 55
FRONT PART ..... 04 - 56
CENTRAL PART ..... 04 - 57
REAR PART ..... 04 - 58

ELECTRIC/ELECTRONIC COMPONENTS

ELECTRONIC CONTROL UNIT

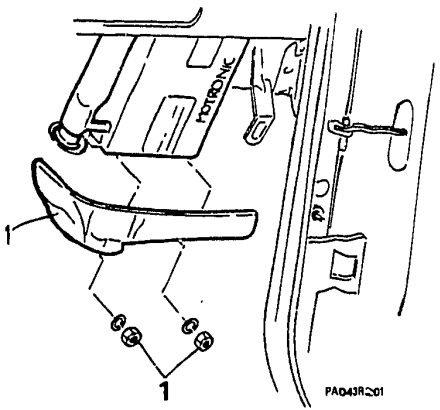

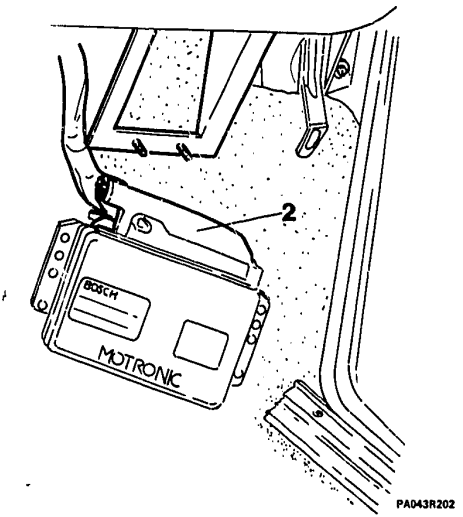

- Disconnect the battery negative cable.
- Remove the dashboard lower part right trim (see **GR. 88**).

1. Unscrew the fixing nuts and remove the electronic control unit, then remove the electronic control unit from its seat.
2. Unplug the connector from the electronic control unit and remove it.

ELECTRIC/ELECTRONIC COMPONENTS (continued)

THROTTLE VALVE SWITCH

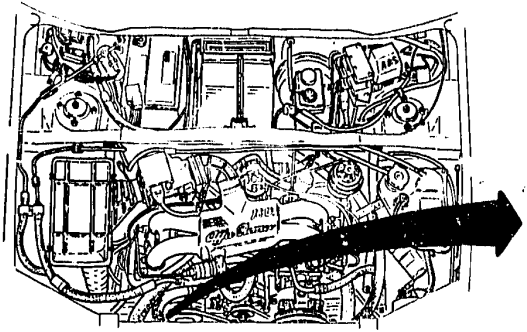

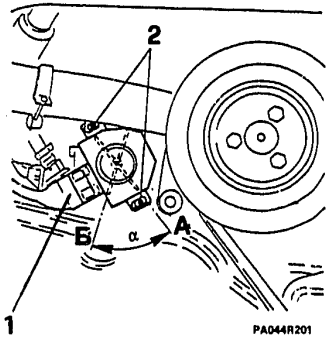

- Disconnect the battery negative cable.
1. Unplug the connector from the switch.
2. Unscrew the two fixing screws and remove the switch from the throttle valve body.

- When re-assembling, proceed to the switch adjustment.

ELECTRIC/ELECTRONIC COMPONENTS (continued)

REMOVAL/REFITTING THE R.P.M. AND TIMING SENSOR

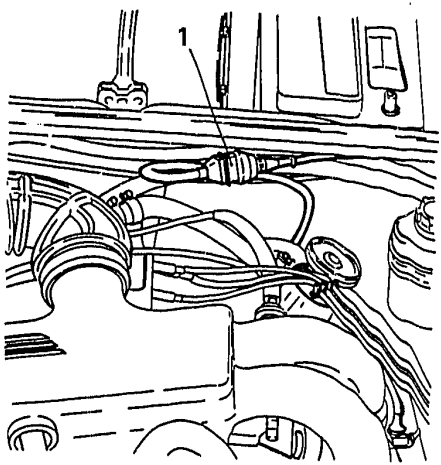

- Disconnect the negative cable from the battery.
1. Disconnect the electrical connection from the r.p.m. and timing sensor and free the wiring from the clamps.

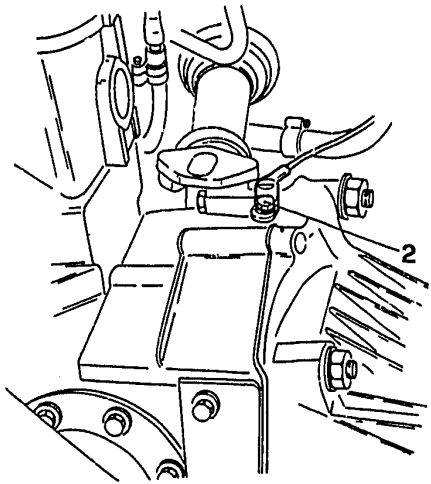

2. Working underneath the vehicle, remove the sensor by loosening the retaining screw.

When refitting ensure that the cable belonging to the sensor is kept away from the high voltage cables.

CHECKING ENGINE R.P.M. AND TIMING SENSOR AIR GAP

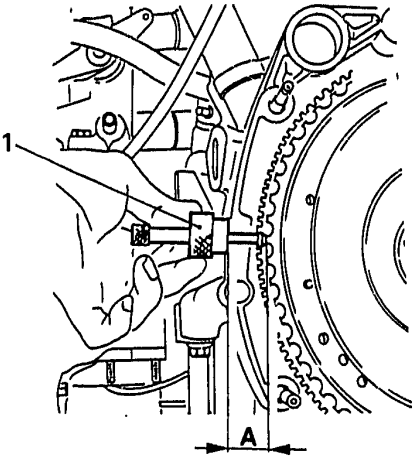

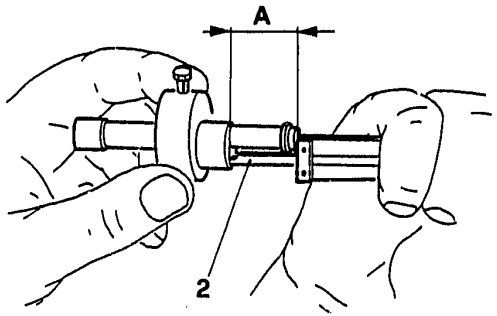

- Remove the r.p.m. and timing sensor (see specific procedure).

1. Using tool N° 1.820.079.000 (A.2.0449) measure value "A".
2. Measure value "A" using a gauge.

CHECKING ENGINE R.P.M. AND TIMING SENSOR AIR GAP (continued)

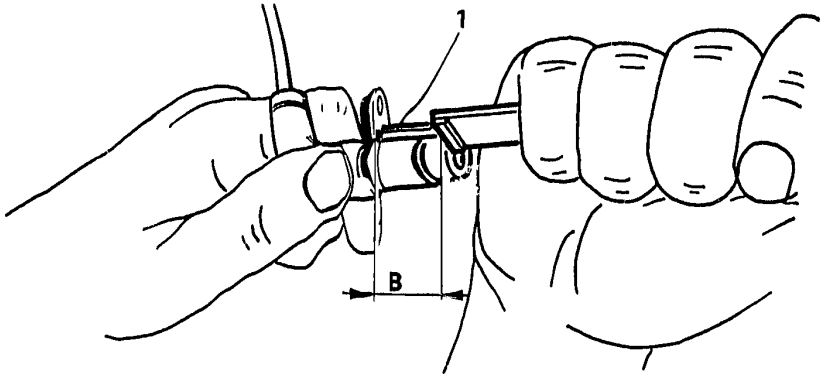

A - B = 0.7 ± 0.1 mm

1. Using a gauge, measure the value of "B"

- Calculate the r.p.m. and timing sensor air gap as shown and check that it is within the specified limits.

EXHAUST SYSTEM (For vehicles with catalytic converter)
ASSY

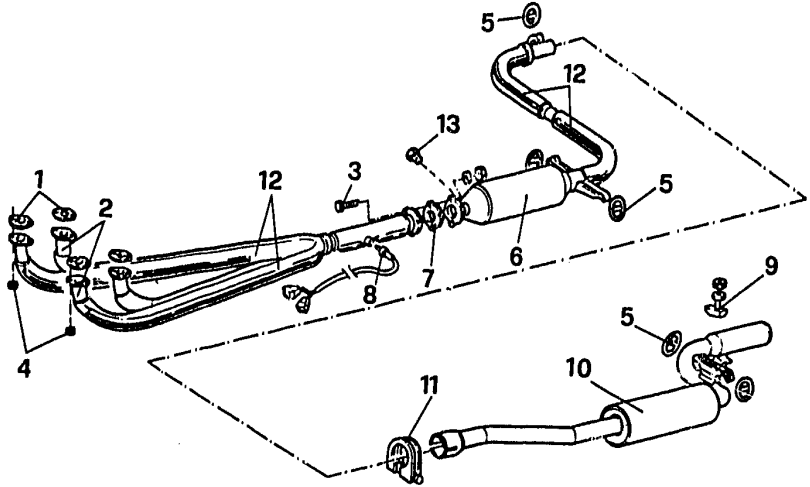

1 Gaskets
2 Manifold - rear part
3 Bolt
4 Manifold-to-cylinder heads fixing nuts
5 Rubber supporting ring
6 Catalytic muffler - central part
7 Gasket
8 Lambda probe
9 Rubber pad
10 Rear silencer
11 Clamp
12 Heat shielding
13 Cock for exhaust gas intake seating

EXHAUST SYSTEM (For vehicles with catalytic converter) (continued)

FRONT PART

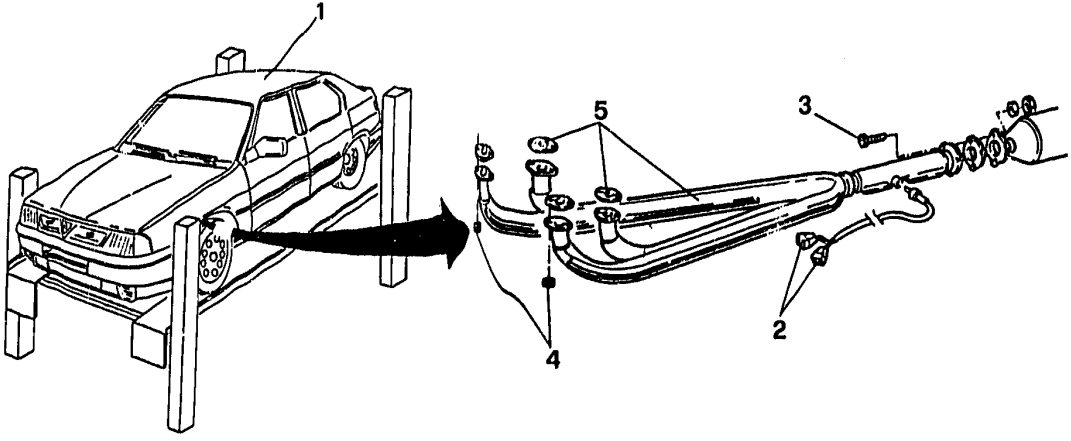

1. Place the vehicle on a lift.
2. By operating in the engine compartment unplug the lambda probe connectors and release the wiring from the holding clamps.
3. Raise the vehicle and disconnect the manifolds from the catalytic exhaust by unscrewing the relative bolts.
4. Unscrew the manifold-to-cylinder head fixing nuts.
5. Remove the manifolds with the relevant gaskets.

CENTRAL PART

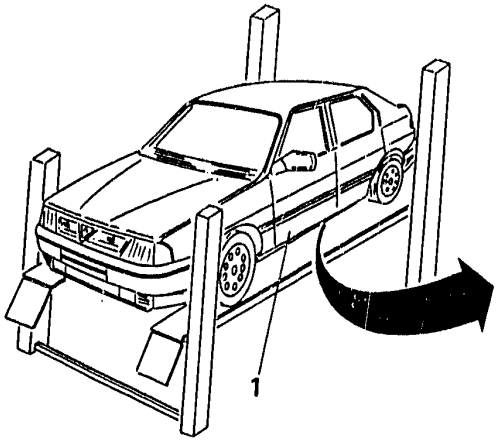

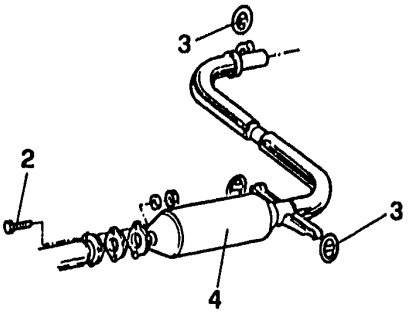

1. Raise vehicle on lift.
- Remove tail section
2. Unscrew bolts securing catalytic muffler to exhaust manifold.
3. Release supporting brackets from rubber rings.
4. Remove central section.

REAR PART

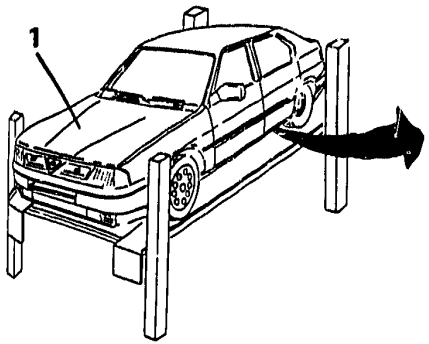

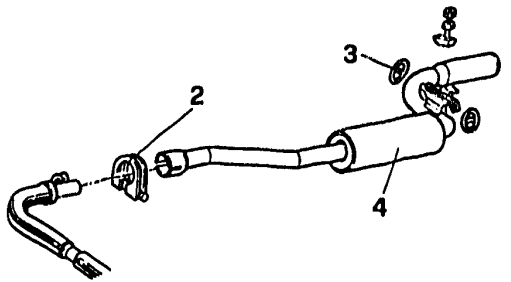

1. Lift the vehicle placed on the lift platform.
2. Unloose the clamp securing the central to the rear part of the exhaust pipe.
3. Release the spring rings from the supporting brackets.
4. Remove the rear part of the exhaust pipe.

LAMBDA PROBE REPLACEMENT

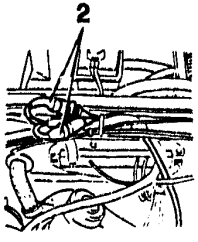

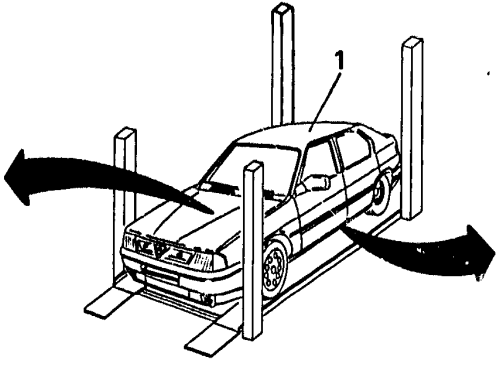

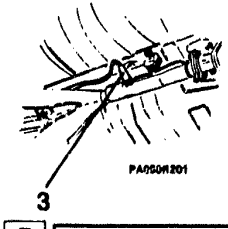

Grease:
R. GORI NEVER SEEZ
or
BOSCH 5.964.080.1005

1. Place the vehicle on a lift platform.
2. By operating inside the engine compartment, unplug the Lambda probe connectors and release the wiring from the clamps.
3. By operating under the vehicle, unscrew the Lambda probe and remove it.

- When installing the Lambda probe, smear its thread with the prescribed grease, then tighten the probe fully down.
- Re-connect the Lambda probe wiring in the engine compartment.

EXHAUST SYSTEM (for vehicles without catalytic converter)

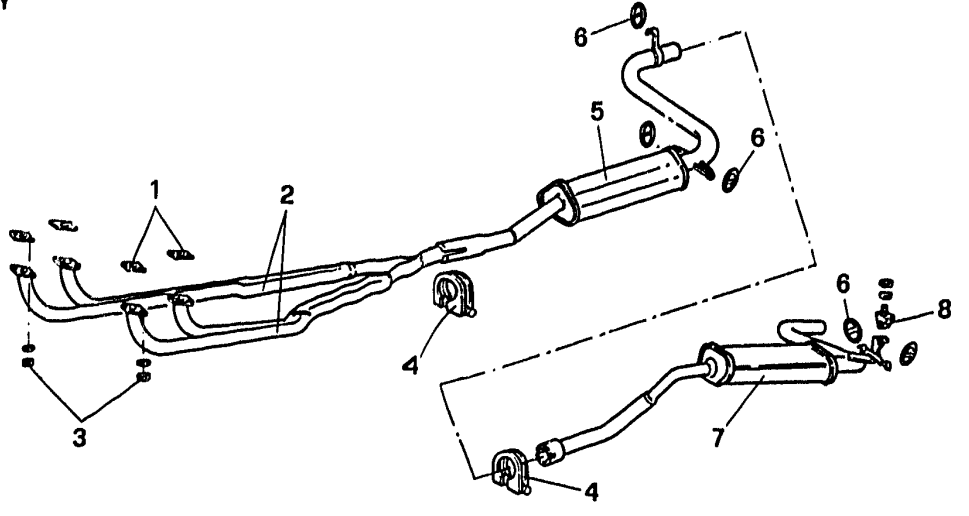

1 Gasket
2 Manifold - front part
3 Manifold-to-cylinder heads fixing nuts
4 Clamp
5 Silencer - intermediate part
6 Rubber supporting ring
7 Silencer - rear part
8 Rubber supporting ring

FRONT PART

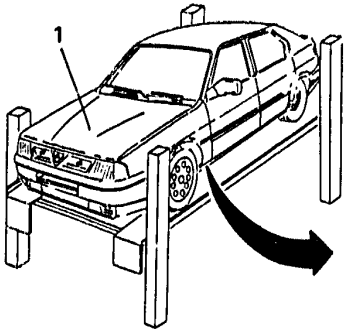

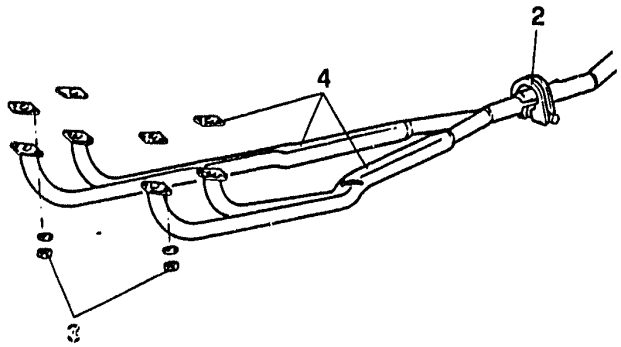

1. Lift the vehicle placed on a lift platform.
2. Unloose the front part-to-intermediate part connecting clamp and move it aside from its seat.
3. Unscrew the manifold-to-cylinder head flange fixing nuts.
4. Remove the front part with the relevant gaskets.

CENTRAL PART

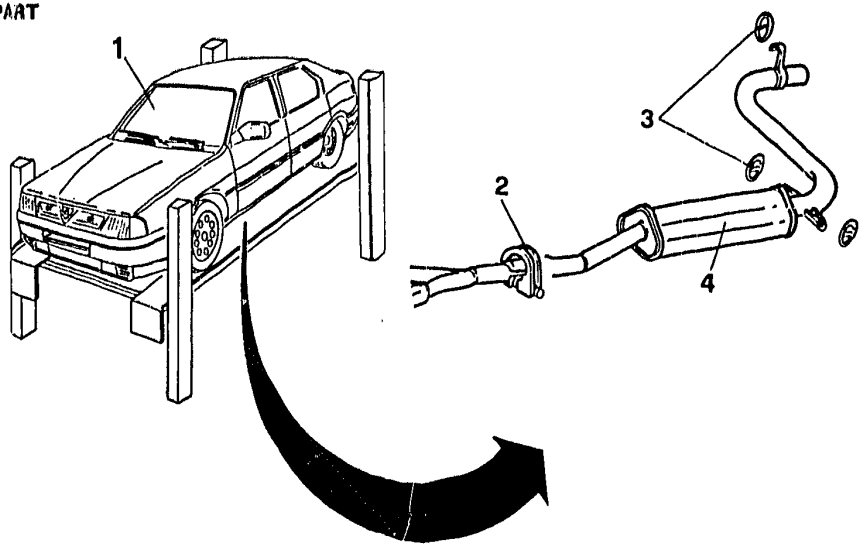

1. Lift the vehicle placed on the lift platform.
   - Remove the rear part of the exhaust pipe
2. Unloose the clamp securing the central to the front part of the exhaust pipe.
3. Remove the spring rings from the supporting brackets.
4. Remove the central part of the exhaust pipe.

REAR PART

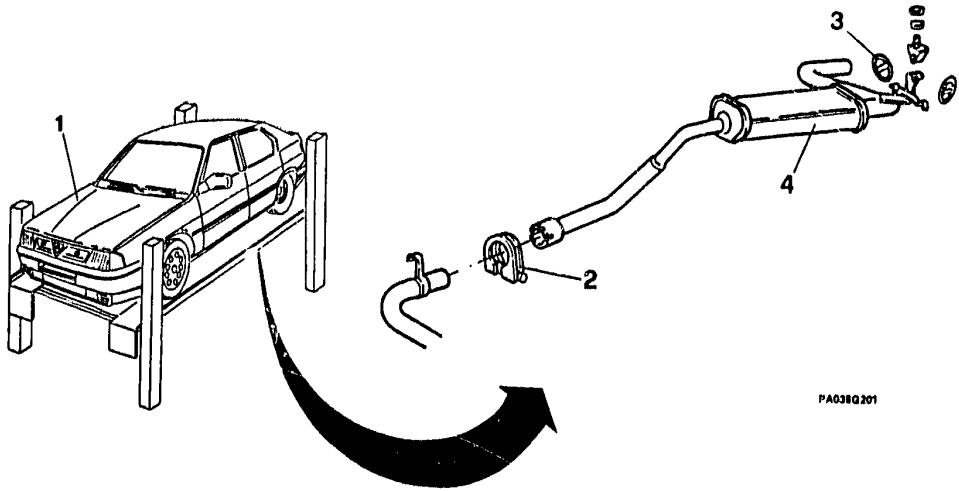

1. Lift the vehicle placed on the lift platform.
2. Unloose the clamp securing the central to the rear part of the exhaust pipe.
3. Release the spring rings from the supporting brackets.
4. Remove the rear part of the exhaust pipe.

16 VALVE ELECTRONIC INJECTION ENGINE

TCS

TECHNICAL CHARACTERISTICS AND SPECIFICATIONS SPECIFIC TOOLS

TECHNICAL CHARACTERISTICS AND SPECIFICATIONS

CHECKS AND ADJUSTMENT ..... 04 - 59
Flow test ..... 04 - 59
Calibration of switch on accelerator throttle valve ..... 04 - 59
Idle speed and checking exhaust emissions ..... 04 - 60
Fuel supply circuit ..... 04 - 61
FLUIDS AND LUBRICANTS ..... 04 - 61
SPECIFIC TOOLS ..... 04 - 62

TECHNICAL CHARACTERISTICS AND SPECIFICATIONS

CHECKS AND ADJUSTMENTS

Flow test

Air leak with by-pass screw completely tightened (Solex flowmeter)	120 ÷ 130 scala K
Air leak with throttle valve adjusted and by-pass open (Solex flowmeter)	185 ÷ 190 scala N

Calibration of switch on accelerator throttle valve

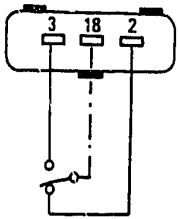

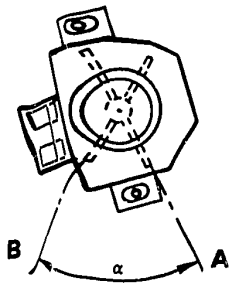

2- Idle speed terminal
(corresponding to position A: throttle valve closed)
3- Peak r.p.m. terminal
(corresponding to position B: throttle valve opened)

	Resistance	
	Terminals 2 - 18	Terminals 3 - 18
Throttle valve completely closed	0	∞
Throttle valve opened at an angle $\alpha = 55° \pm 4°$	∞	0

CHECKS AND ADJUSTMENTS (continued)

Idle speed and checking exhaust emissions

			Without catalytic converter	With catalytic converter
Engine idle r.p.m. (with engine warm, gearbox in neutral and clutch engaged)		r.p.m.	800 ÷ 900	900 ÷ 1050
Percentage of exhaust CO at idle speed	% in vol.	On leaving exhaust pipe	0,5 ÷ 1,5	≤ 0,5
		Upstream of catalytic converter	-	0,6 ÷ 1,0
Unburt hydrocarbons HC		On leaving exhaust pipe	-	≤ 50 p.p.m.
		Upstream of catalytic converter	-	≤ 300 p.p.m.

CHECKS AND ADJUSTMENTS (continued)

Fuel supply circuit

Characteristics \ Unit of measurement	kPa (bar; kg/cm^2)
Operating pressure (1)	280 ÷ 320 (2,8 ÷ 3,2; 2,9 ÷ 3,3)
Maximum pressure permitted for circuit sealing test	400 (4; 4,1)

(1) To measure upstream of the dashpot with vacuum intake hose disconnected from pressure regulator.

FLUIDS AND LUBRICANTS

Application	Type	Name	Quantity
Accelerator pedal rod (on rubber supports)	GREASE	ISECO Molykote Longterm n. 2	-
Spacer on accelerator pedal rotation pin	GREASE	AGIP F1 Grease 15	-

SPECIFIC TOOLS

Identification number	Denomination
1.824.002.000 (C.2.0014)	Vacuum pressure gauge  PA063R201
1.824.013.000 (C.2.0126)	Pressure reducer  PA063R202
1.824.020.000 (C.4.0101)	Equipment for pressure measurements  PA063R203

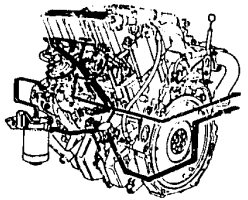

TURBODIESEL ENGINE

FUEL SUPPLY CIRCUIT

SUPERCHARGING SYSTEM

FUEL SUPPLY CIRCUIT

ASSY ..... 04 - 63
DESCRIPTION ..... 04 - 64

SUPERCHARGING SYSTEM

ASSY ..... 04 - 66
DESCRIPTION ..... 04 - 67
IMPORTANT GENERAL INFORMATION ..... 04 - 68
TURBOSUPERCHARGER ..... 04 - 69
Assy ..... 04 - 69
Removal - Installation ..... 04 - 70
Rotor shaft end float and radial clearance check ... 04 - 72
"WASTE GATE" VALVE ..... 04 - 73
Removal - Installation ..... 04 - 73
Check and adjustment ..... 04 - 75
INTERCOOLER ..... 04 - 76
Removal - Installation ..... 04 - 76

FUEL SUPPLY CIRCUIT ASSY

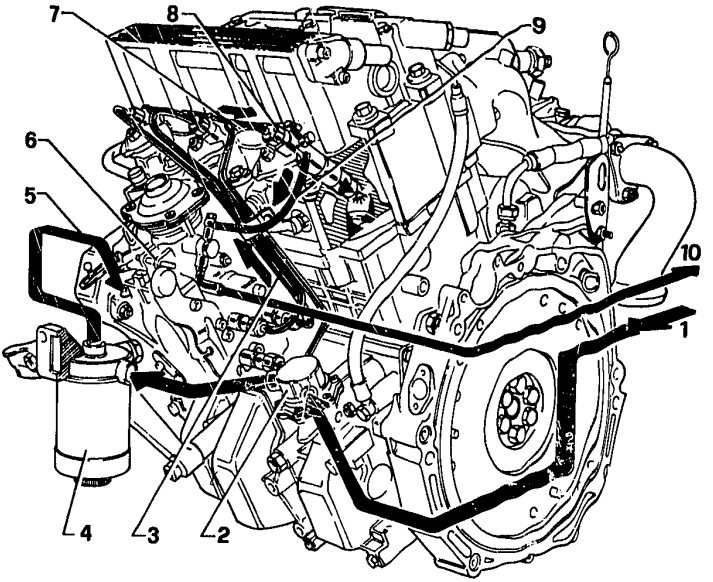

1 Diesel fuel line from tank
2 Fuel supply pump
3 Diesel fuel-to-injectors delivery pipe
4 Diesel fuel filter
5 Diesel fuel-to-injection pump delivery
6 Injection pump
7 Diesel fuel excess return pipe from injectors
8 Injector
9 Diesel fuel return pipe
10 Diesel fuel return line to tank

PA064R201

FUEL SUPPLY CIRCUIT (continued)

DESCRIPTION

The fuel supply system is a indirect-injection type with high turbulence pre-combustion chamber and is made up of the following components:

- Rotary injection pump, BOSCH piston and min. and max. r.p.m. regulator.
- Injection pump with built-in adjusting valve which keeps constant the delivery fuel pressure to the injectors, by returning the excess of fuel to the tank.
- A pneumatic capsule on the injection pump which adjust the delivery pressure to the injectors in relation to the supercharging air pressure.
- Injection automatic advance device in relation to the supply pressure.

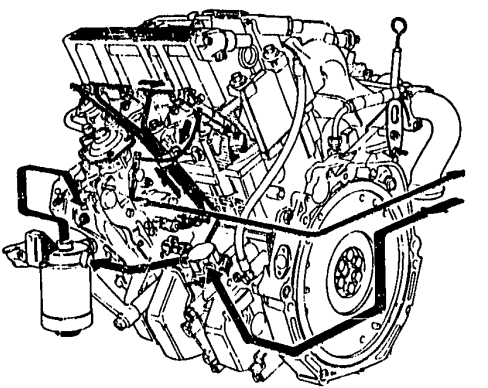

PA056H201

FUEL SUPPLY CIRCUIT
DESCRIPTION (continued)

- R.p.m. - activated microswitch to de-energize the pre-heating glow plugs when the accelerator control lever performs a travel higher than 5.5 mm, corresponding to an engine r.p.m. of 1300 ÷ 1900, before the timer has by-passed the supply to the glow plugs.
- Electric-stop valve for cutting off the fuel supply when the engine is switched off.
- Needle spray-nozzle injectors.
- The diesel fuel filter is equipped with a fuel pre-heating device controlled by a sensor. When fuel temperature is lower than 2°C an electric resistance heats it up till a maximum temperature of 6°C before the fuel is sent to the injection pump.
- Mechanical fuel supply pump operated by an auxiliary cam of the camshaft.

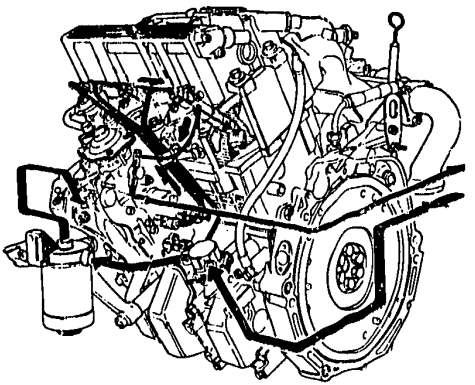

PA056R201

SUPERCHARGING SYSTEM
ASSY

1 Air filter
2 Turbosupercharger
3 Air delivery pipe to turbosupercharger
4 Air delivery pipe to intake manifold
5 Intercooler
6 Air delivery pipe to the intercooler

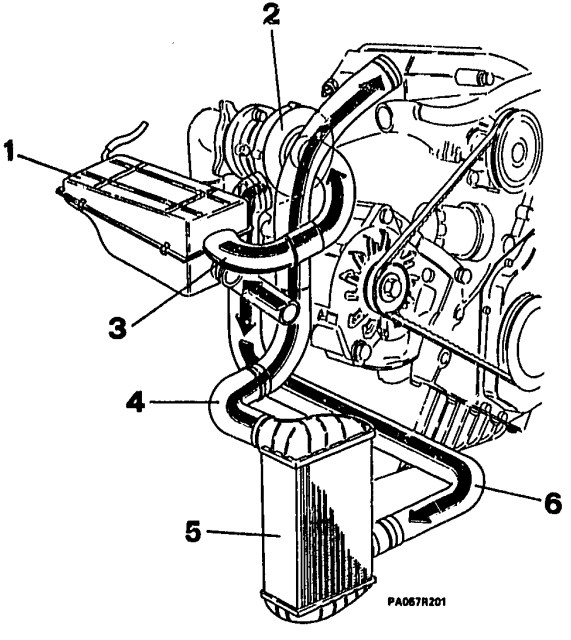

SUPERCHARGING SYSTEM (continued)

DESCRIPTION

The supercharging system is made up of the following components:

- Exhaust gas turbosupercharger fitted with a waste-gate valve which starts operating whenthe engine reaches 2.200 r.p.m., corresponding to the maximum supercharging value.
- Intercooler which cools down the compressed intaken air in order to limitate the possibility of engine knocking and increase the volumetric performance with a consequent increase of the engine power.

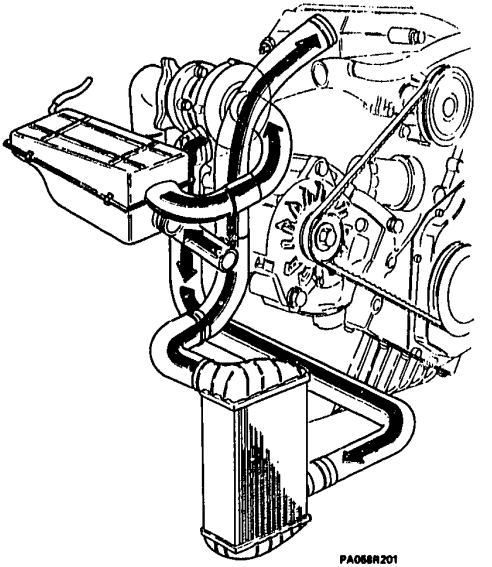

PA068R201

IMPORTANT GENERAL INFORMATION

- Never disconnect the battery when the engine is running or when the the contact is made (ignition key set to "On" position); otherwise the electric and electronic components may be seriously and irreversibly damaged.
- Before starting up the engine, make sure the battery posts are properly tightened.
- Never make use of a "fast-charging" power supply unit to start up the engine.
- Completely disconnect the battery from the electrical system before recharging it.
- Do not start up the engine if some electric connections have been interrupted or some components have been removed fromtheir seat.
- Never ground any of the high or low-voltage points and never interrupt any connection when the engine is running.
- In the case of installation of accessories on vehicle, it is always suggested to disconnect the electronic control units before proceeding to the accessory operational checks. Itis strictly recommended not to shunt electric connections from the electronic control unit wirings.
- Before any intervention on the various system components, make sure that no connectors are unplugged, clamps unloosened, pipe cut or clogged.
- Never connect or disconnect the plug from the electronic control unit leads when the ignition contact is made.
- Make sure that shielded cable connectors are properly plugged in.
- In the case of fuse replacement, remove the key from the ignition switch; if a fuse repeatedly burns, troubleshoot the cause of the short-circuit and never replace the fuse with acable piece.
  It is strictly recommended to replace the burnt fuse with aspare one bearing the same amperage.

TURBOSUPERCHARGER
Assy

1 Clamp
2 Delivery sleeve
3 Intake sleeve
4 Oil return pipe from turbosupercharger
5 Union
6 Turbosupercharger
7 Collar
8 Nut
9 Bolt
10 Exhaust gas union
11 Self-locking nut
12 Gasket
13 Self-locking nut
14 Gasket
15 Union
16 Oil delivery pipe to turbosupercharger
17 Screw

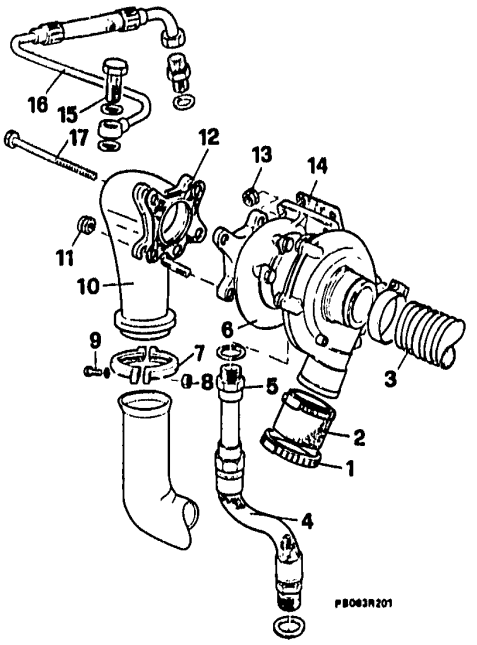

TURBOSUPERCHARGER (continued)
Removal - Installation

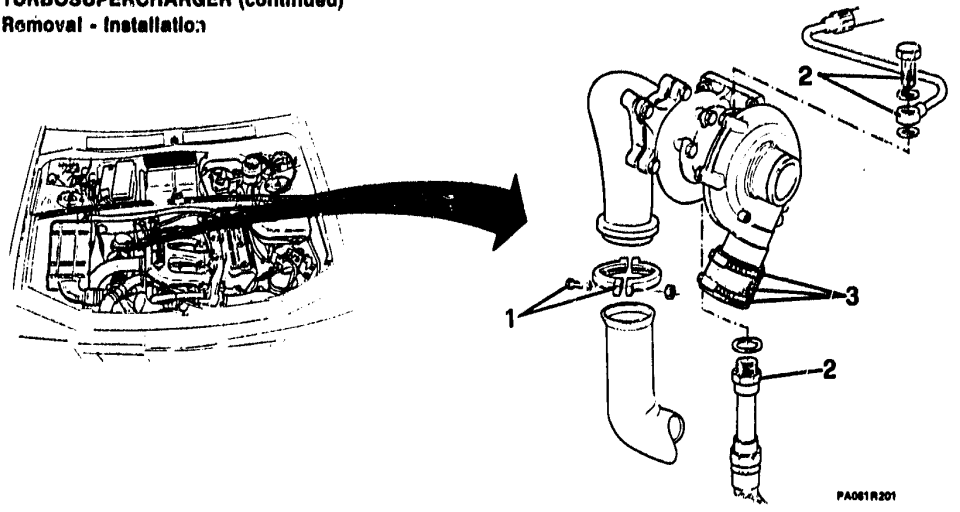

- Disconnect the battery negative cable.
- Remove the air filter complete assy
1. Unscrew the bolts and remove the union-to-exhaust pipe fixing collar.
2. Unscrew the unions of the oil delivery and return pipes to turbosupercharger.
3. Unloose the two clamps of the air delivery sleeve to the intercooler.

TURBOSUPERCHARGER

Removal - Installation (continued)

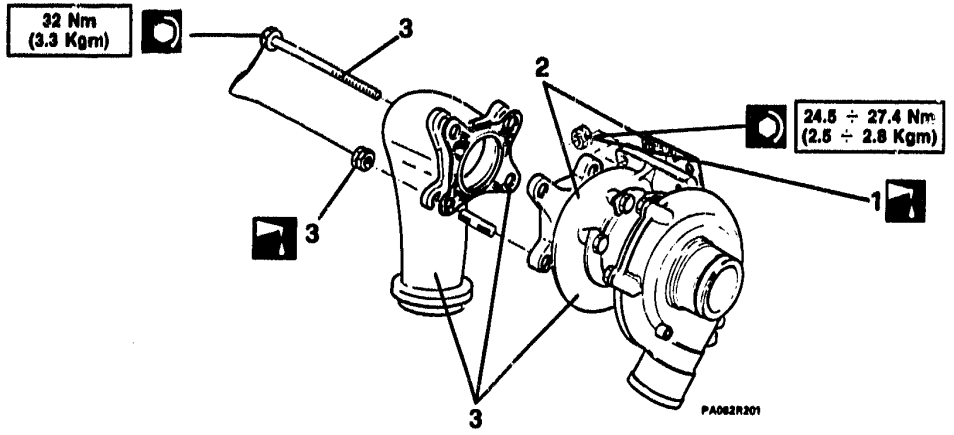

1. Suitably lubricate the turbosupercharger-to-exhaust manifold fixing nuts with an anti-seizing liquid.
2. Remove the turbosupercharger complete with gasket.
3. By operating at the bench, lubricate the three nuts and twoscrews fixing the exhaust gas union to the turbosupercharger, then separate them, keeping a part the gasket.

- When re-assembling, fill the turbosupercharger body with engine oil.

TURBOSUPERCHARGER (continued)
Rotor shaft end float and radial clearance check.

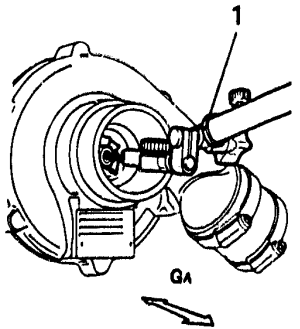

End float GA = 0.01 mm MAX

- To check clearances by means of comparators, it is necessary to place the turbosupercharger on a test bencht, whilst onvehicle, only a manual check can be performed, along with acheck for anomalous noise or sticking by rotating the shaftmanually.

1. To check end float "GA", reset the comparator on turbine and measure rotor range by operating on the shaft opposite side.

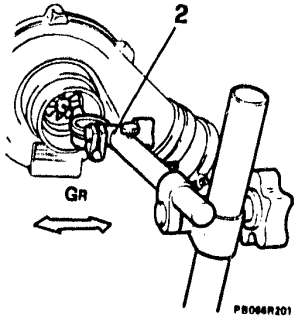

Radial clearance GR = 0.03 mm MAX

2. The check on radial clearance "GR" must be carried out by pushing the rotor sideways as to the axis and measuring the maximum displacement value with the comparator.

Turbosupercharger overhaul operations are not allowed; if found faulty, the turbosupercharger must be replaced.

"WASTE GATE" VALVE
Removal - Installation

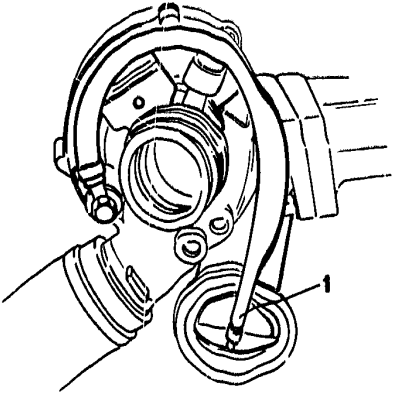

1. Disconnect the tube from the "waste gate" valve.

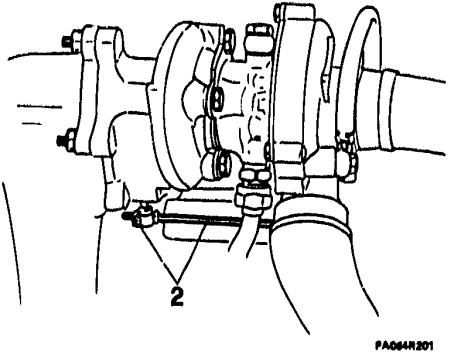

2. Unscrew the fixing bolt and disconnect the control rod.



"WASTE GATE" VALVE

Removal - Installation (continued)

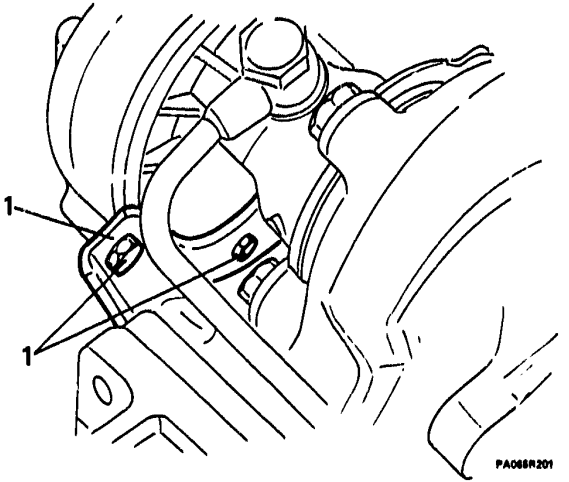

1. Unscrew the two nuts fixing the supporting bracket and remove the "waste gate" valve along with its bracket.

- When re-assembling, if necessary, perform the check and theadjustment of the "waste gate" valve

"WASTE GATE" VALVE (continued)
Check and adjustment

SOON TO BE ISSUED

INTERCOOLER
Removal - Installation

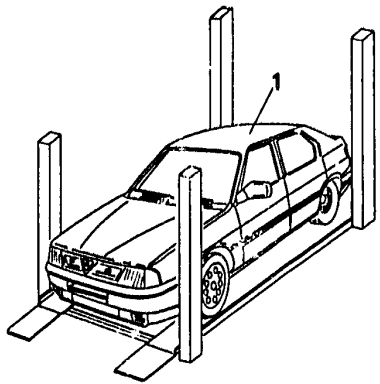

1. Place the vehicle on a lift platform.
- Disconnect the battery negativ ecable.
- Remove the air filter complete assy

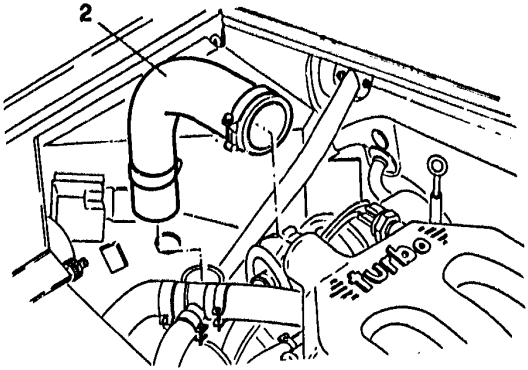

PA067R201

2. Remove the sleeve connecting the intake air box to the intercooler.

INTERCOOLER

Removal - Installation (continued)

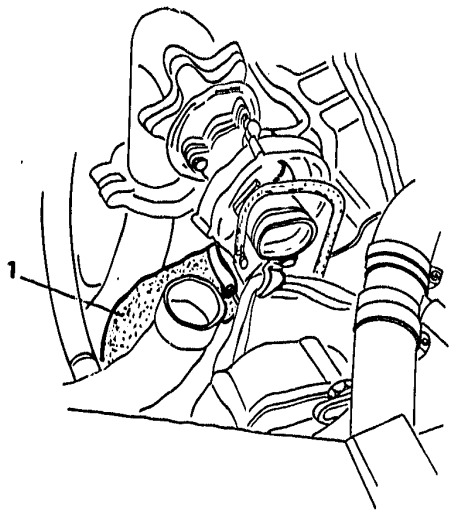

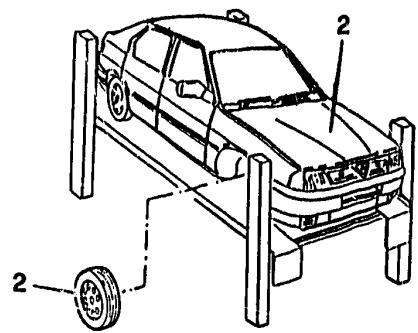

1. Remove the turbosupercharger-to-intercooler air delivery sleeve.

2. Lift the vehicle placed on the lift platform and remove thefront right wheel.
- Remove the fender panel (see **GR. 75**).

⇩

INTERCOOLER

Removal - Installation (continued)

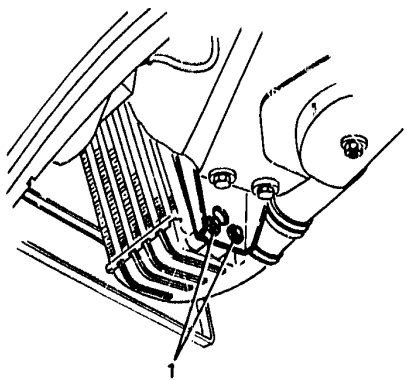

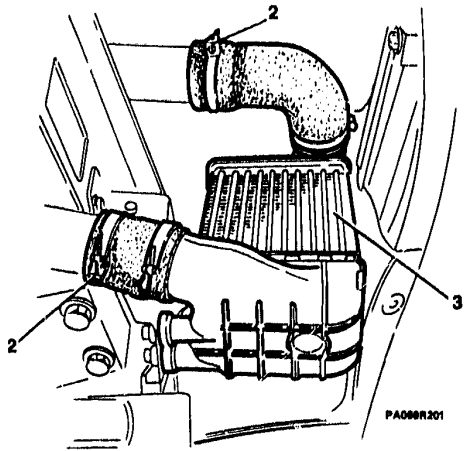

1. Unscrew the two intercooler fixing screws.
2. Loosen the air delivery and return sleeve clamps to intercooler, by disconnecting the sleeves from the pipes.
3. Remove the intercooler complete with its sleeves.



TURBODIESEL ENGINE

AIR FILTER

FUEL SUPPLY SYSTEM

AIR FILTER

ASSY..... 04 - 79
REMOVAL - INSTALLATION ..... 04 - 80

FUEL SUPPLY SYSTEM

ASSY..... 04 - 81
FUEL TANK ..... 04 - 83
Removal - Installation ..... 04 - 83
Disassembly - Assembly..... 04 - 85
CHECKS AND INSPECTIONS..... 04 - 86
FUEL FILTER ..... 04 - 87
Removal - Installation ..... 04 - 87
FUEL PUMP ..... 04 - 88
Removal - Installation ..... 04 - 88

AIR FILTER ASSY

1 Air filter cover
2 Oil vapour breather pipe
3 Filter cartridge
4 Air-to-turbosupercharger delivery corrugated sleeve
5 Air filter box-to-car body fixing screw
6 Air filter box
7 Air intake sleeve
8 Rubber pad
9 Spacer

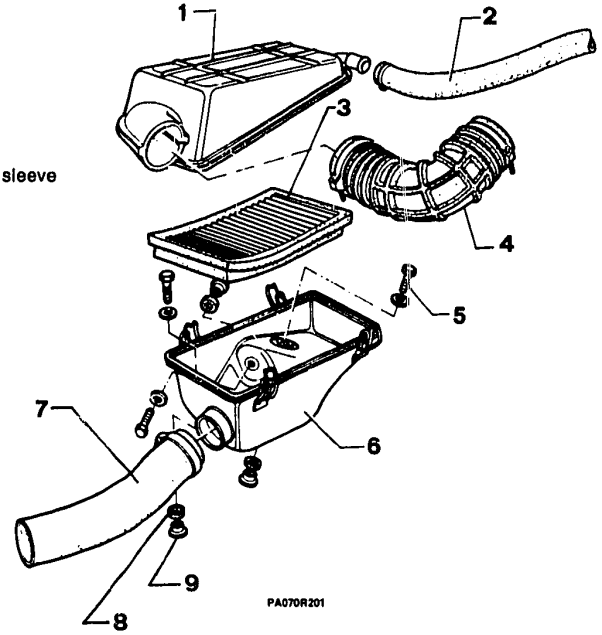

AIR FILTER (continued)

REMOVAL - INSTALLATION

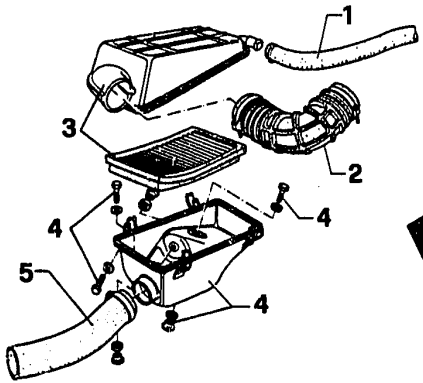

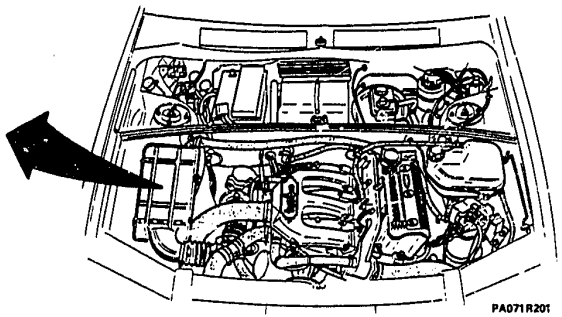

1. Disconnect the oil vapour breather pipe from air filter cover.
2. Remove the corrugated sleeve.
3. Release the fixing clips and remove the air filter cover along with the filter cartridge.
4. Unscrew the three air filter box-to-car body fixing screws and remove the box along with rubber pads and spacers.
5. Remove the air intake sleeve from the air filter box.

- When re-assembling, position the filter cartridge with its folded side facing downwards.

FUEL SUPPLY SYSTEM

ASSY

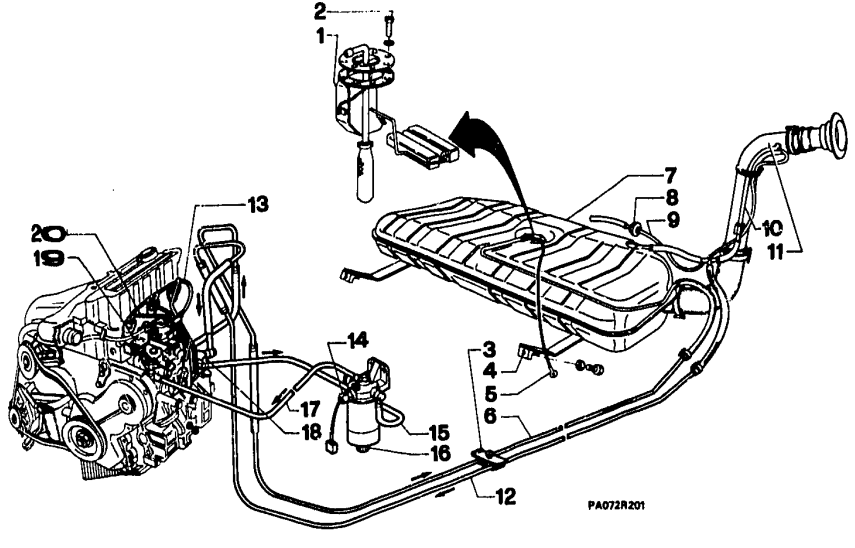

1 Float assy
2 Float assy fixing screws
3 Fuel supply pipe holding clamp
4 Fuel tank strap
5 Ground cable
6 Excess fuel return pipe
7 Fuel tank
8 Check valve
9 Breather hose
10 Fill-up breather hose

FUEL SUPPLY SYSTEM

ASSY (continued)

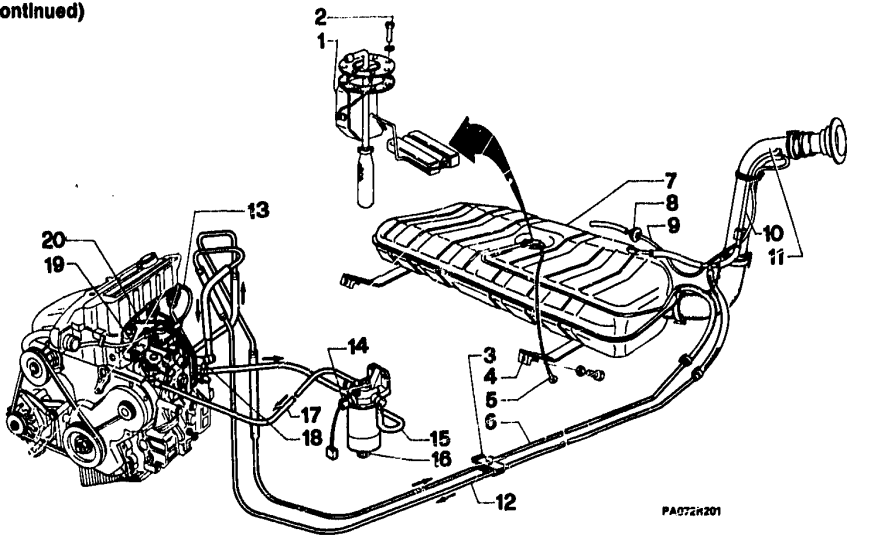

11 Filler
12 Fuel delivery pipe
13 Injector draining hose
14 Diesel fuel heater
15 Fuel pump-to-filter connecting pipe
16 Fuel filter
17 Injection pump-to-filter connecting pipe
18 Fuel pump
19 Injection pump
20 Fuel-to-injectors delivery pipe

FUEL TANK

Removal - Installation

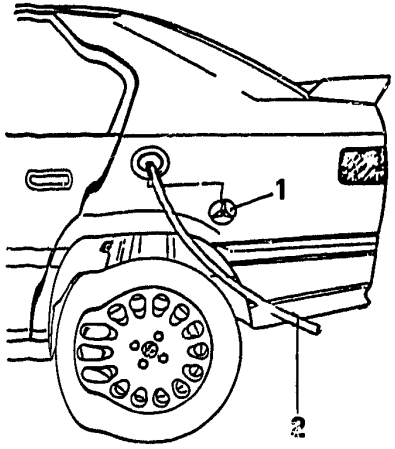

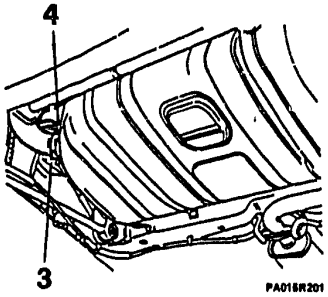

- Disconnect the battery negative cable.
1. Remove the fuel tank filler cap.
2. Suck the petrol out of the tank by means of a special pump.
3. Unloose the clamp securing the filler hose to the fuel tank.
4. Unloose the clamp fixing the pipe to the fuel supply hose.

Removal - Installation (continued)

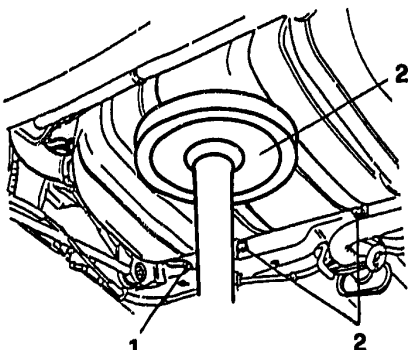

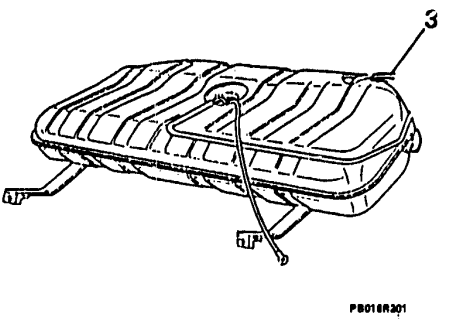

1. Unscrew and remove the ground cable-to-car body fixing screw.
2. Uphold the fuel tank by means of a column-type jack and unscrew the screws securing the supporting straps to car body.
- Slightly lower the column-type jack.
3. Detach the excess fuel return pipe.
- If necessary, remove the fuel supply pipes by unloosing thefixing clamps and by releasing the pipes from the holding clamps.

Disassembly - Assembly

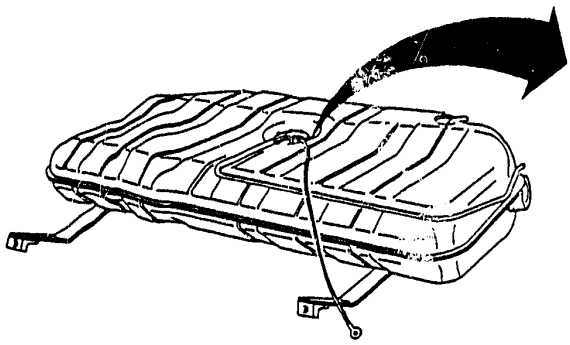

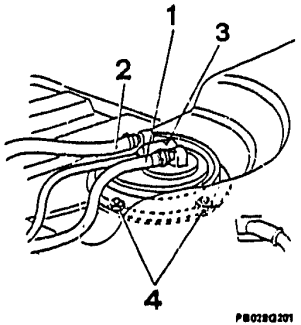

1. Disconnect the fuel delivery pipe from the filler neck on the float.
2. Disconnect the fuel return pipe from the filler neck on the float.
3. Disconnect the electrical wiring from the float.
4. Unscrew the six screws securing the float to the tank, then remove the float with its gasket.

- When reassembling, replace the gasket with a new one.

FUEL SUPPLY SYSTEM (continued)

CHECKS AND INSPECTIONS

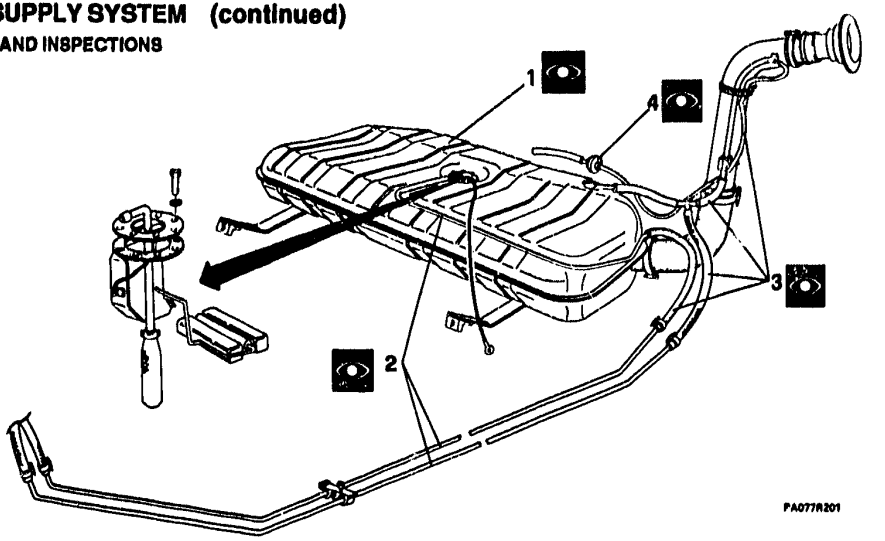

1. Check for fuel tank integrity.
2. Check that the rigid pipes do not shows evidences of oxydation, clogging or dents.
3. Check that the hoses are not porous or damaged.
4. Check the correct operation of the check valve:
   a. Blow compressed air into the check valve from the union side and check that the valve opposes a certain resistance to the air flow.
   b. Blow compressed air into the check valve from the outer air side and check that no resistance to the air flow is applied by the check valve.

FUEL SUPPLY SYSTEM (continued)

FUEL FILTER

Removal - Installation

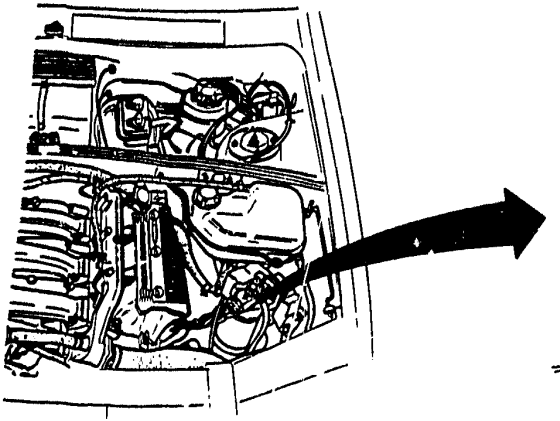

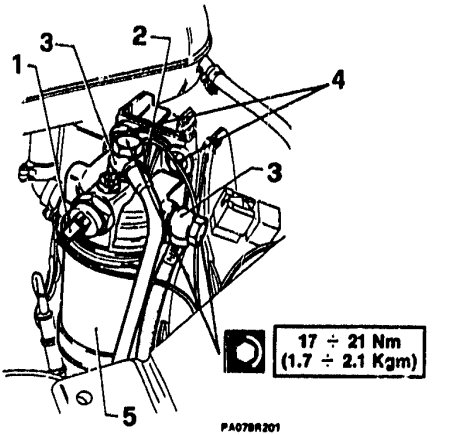

- Disconnect the battery negative cable.

1. Disconnect the cable from the thermal contact.
2. Disconnect the resistance supply cable from the support.
3. Unscrew the fuel delivery and return unions from the fuel filter.
4. Remove the diesel fuel filter by unscrewing the two fixing screws.
5. If necessary, unscrew the cartridge from the support.

- After completing the assembly, bleed the fuel supply circuit.

FUEL SUPPLY SYSTEM (continued)

FUEL PUMP

Removal - Installation

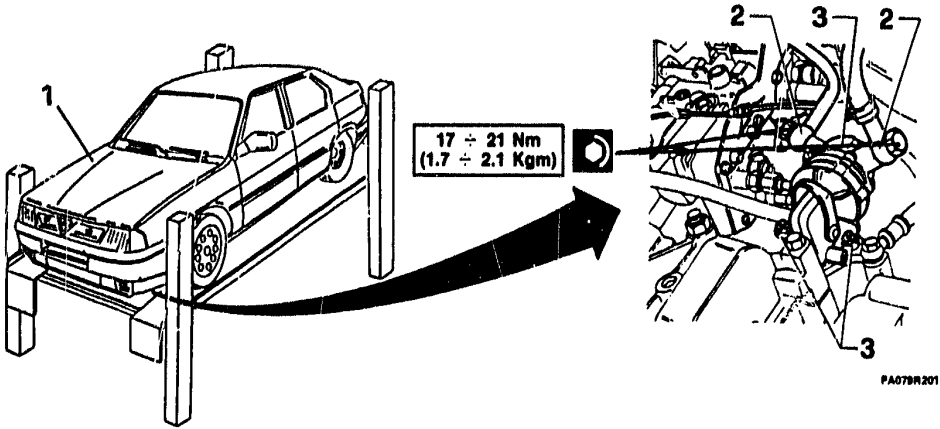

1. Place the vehicle on a lift platform and disconnect the battery negative cable.
2. Lift the vehicle and disconnect the fuel inlet and outlet pipe unions from the fuel pump.
3. Unscrew the fuel pump fixing nuts, then remove the pump along with its gasket.

- When re-assembling, fit new gaskets and bleed the fuel supply circuit.

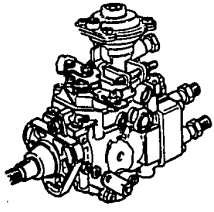

TURBODIESEL ENGINE

FUEL SUPPLY SYSTEM (Continued)

FUEL SUPPLY SYSTEM

INJECTION PUMP ..... 04 - 89
Assy ..... 04 - 89
Removal ..... 04 - 91
Installation ..... 04 - 97
Timing ..... 04 - 100
R.P.M. - ACTIVATED MICROSWITCH ..... 04 - 103
Replacement ..... 04 - 103

FUEL SUPPLY SYSTEM (continued)

INJECTION PUMP

Assy

1 Injection pump pneumatic control pipe (LDA)
2 Union
3 Union
4 Injector draining pipe
5 Diesel fuel-to-injectors delivery pipes
6 Union
7 Accelerator cable
8 Diesel fuel-to-tank return pipe
9 Engine switch off cable
10 Manual advance cable
11 Injection pump

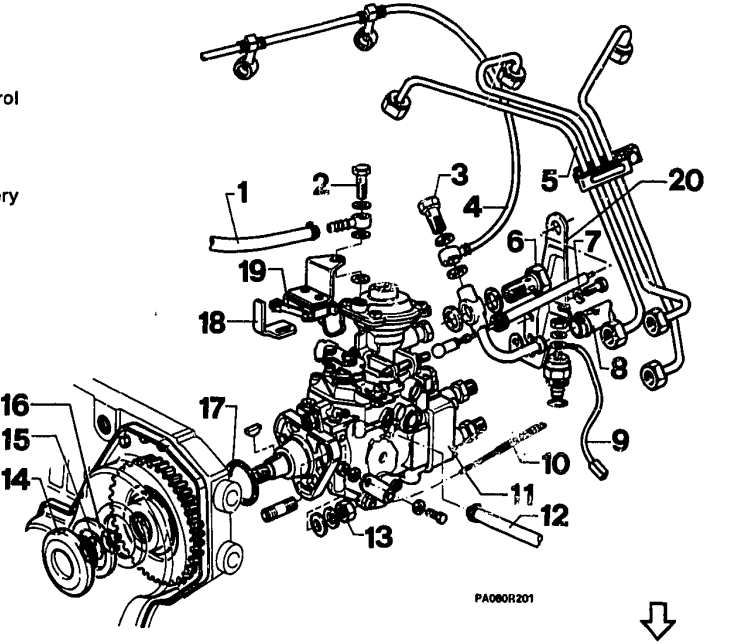

FUEL SUPPLY SYSTEM

INJECTION PUMP
Assy (continued)

12 Fuel-to-pump inlet pipe
13 Pump fixing nut
14 Cover
15 Control gear fixing nut
16 Gasket
17 O-Ring
18 Microswitch adjusting square plate
19 R.p.m.-activated microswitch
20 Accelerator cable supporting bracket and injection pump manual advance cable

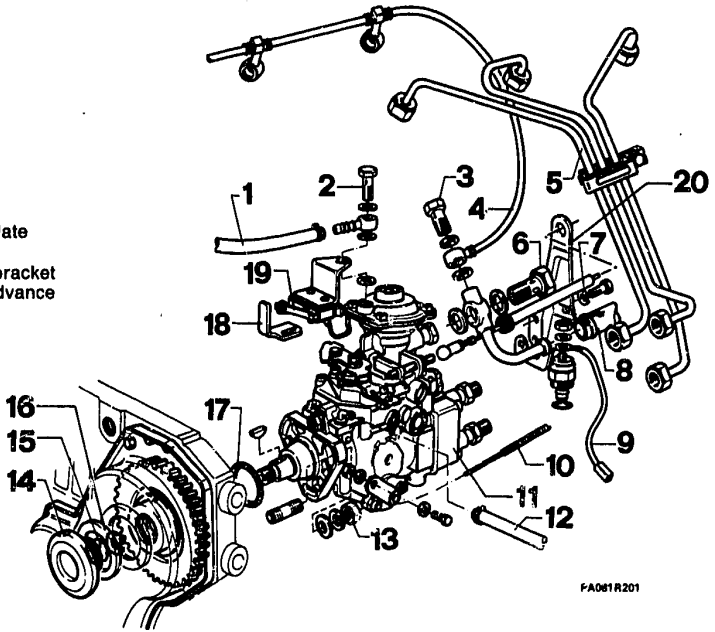

FUEL SUPPLY SYSTEM

INJECTION PUMP (continued)

Removal

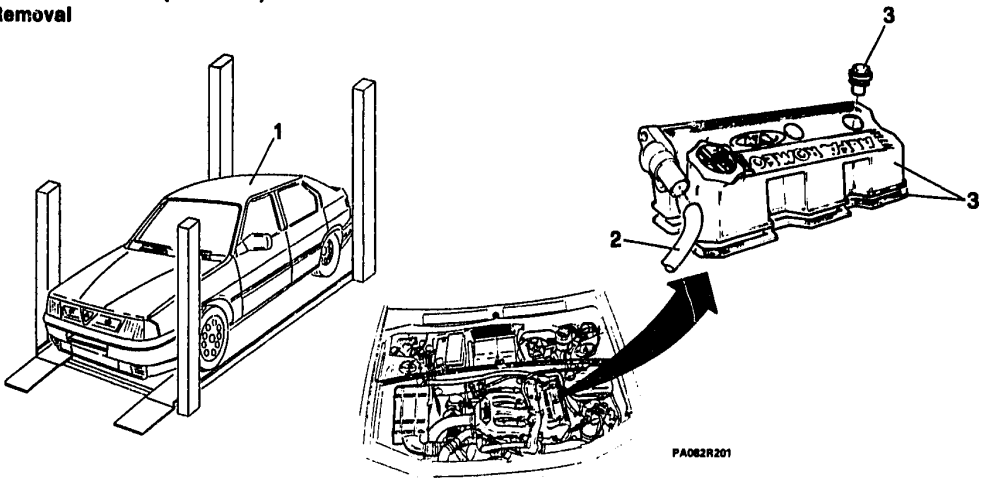

1. Place the vehicle on a lift platform.
   - Remove the bonnet (see **GR. 56**).
   - Disconnect the battery negative post.
   - Remove the coolant radiator (see **GR. 07**).
2. Disconnect the oil vapour breather pipe from the tappets cover.
3. Unscrew the tappets cover nuts and remove the cover with its gasket.

INJECTION PUMP

Removal (continued)

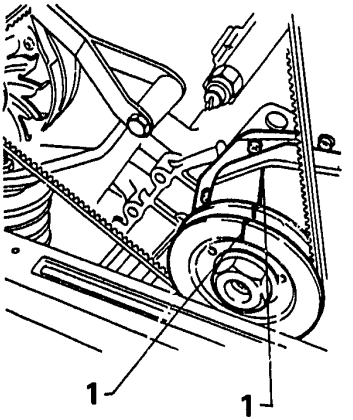

1. Engage the highest speed gear and move the vehicle onwards in order to rotate the crankshaft in the direction of run till matching the reference mark of the crankshaft pulley with the fixed index on the front cover.

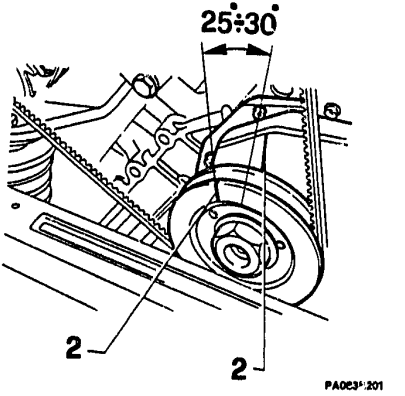

2. Turn the crankshaft counterclockwise of approx. 25° ÷ 30° corresponding to a dsplacement of 35 mm measured on the outer circumference of the crankshaft pulley.

INJECTION PUMP
Removal (continued)

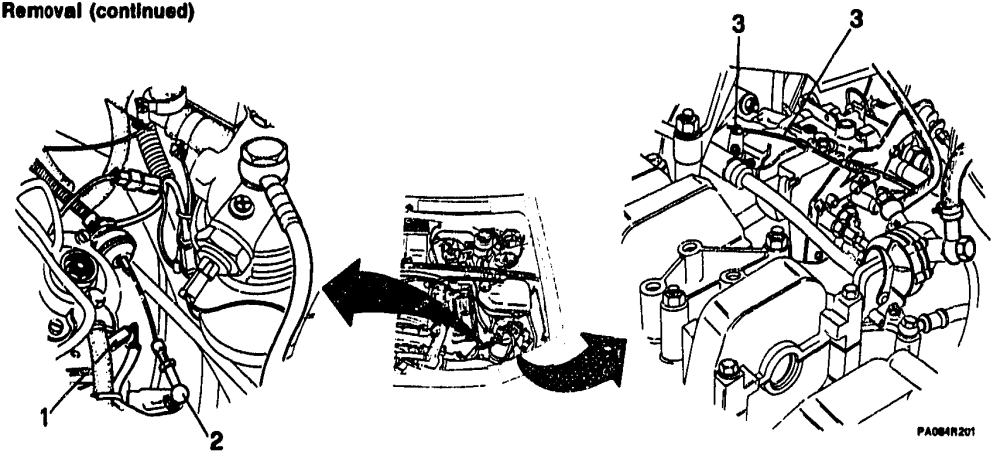

1. Disconnect the engine switch off cable and the r.p.m.-activated microswitch cable.
2. Release and remove the fixing clip of the accelerator cable ball joint, then withdraw the cable with its fairlead from the supporting bracket.
3. By operating under the vehicle, unscrew the advance cable fixing clamp, then disconnect the cable.

INJECTION PUMP
Removal (continued)

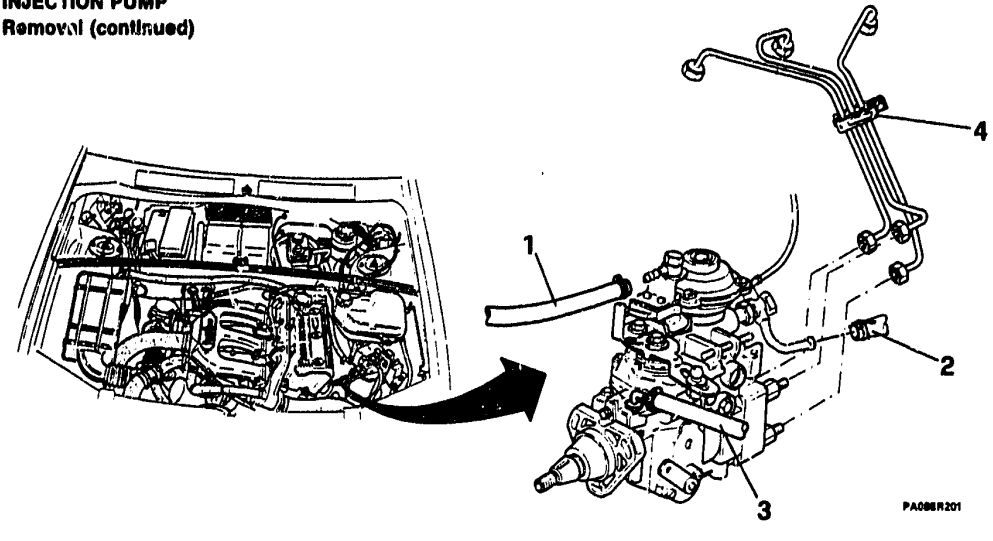

1. Disconnect the injection pump pneumatic advance control pipe from the pump.
2. Disconnect the fuel-to-tank return pipe from the injection pump.
3. Disconnect the fuel inlet pipe from the injection pump.
4. Unscrew the unions on injectors and injection pump and remove the pipings.

⇩

INJECTION PUMP
Removal (continued)

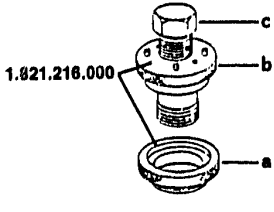

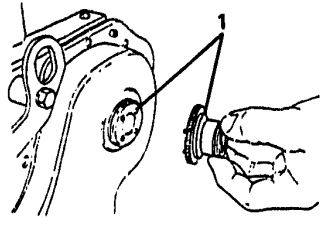

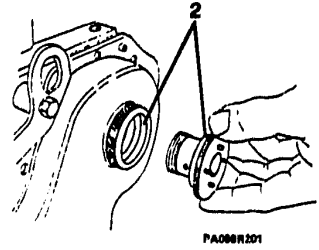

PA088R201

- For the removal of the injection pump, make use of tool No. 1.821.216.000.

1. Match part **b** to the four holes on the casing cap, then unscrew it.
- Remove the locking nut between the drive gear and the injection pump.
2. Screw down part **a** on the casing and tighten, and screw down part **b** to the gear, which is thus blocked in its assembly position.

INJECTION PUMP
Removal (continued)

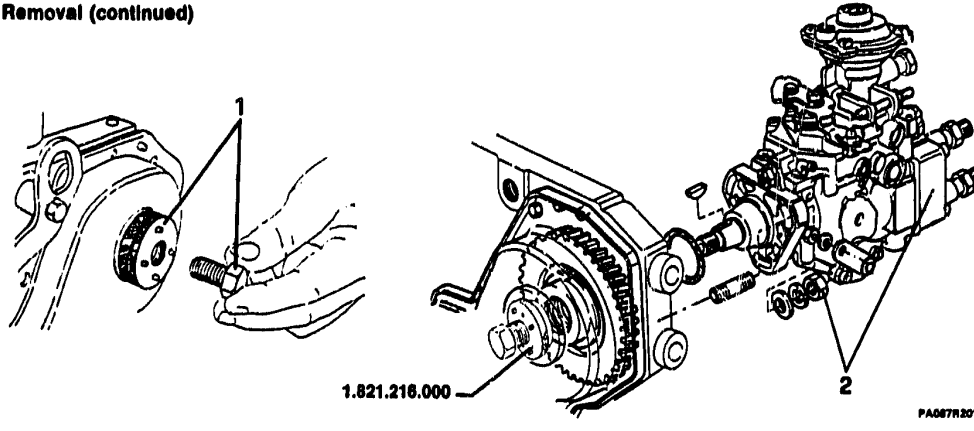

1. Put in contact pulling screw C with the pump shaft end.
2. Remove the three nuts fixing the pump and proceed to the pump removal.

Keep tool No. 1.821.216.000 installed on the casing till the injection pump re-assembly, and prevent the crankshaft rotation.

INJECTION PUMP (continued)
Installation

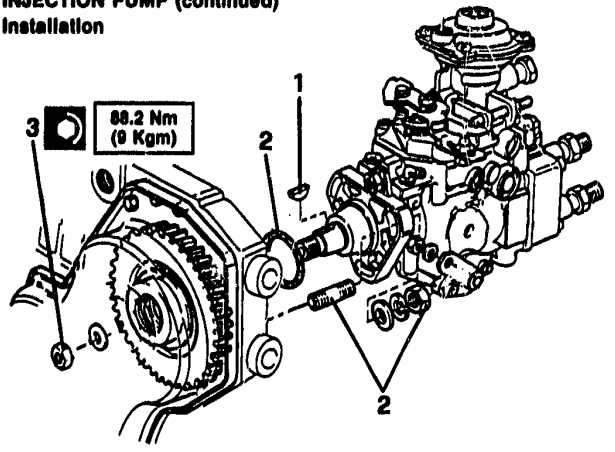

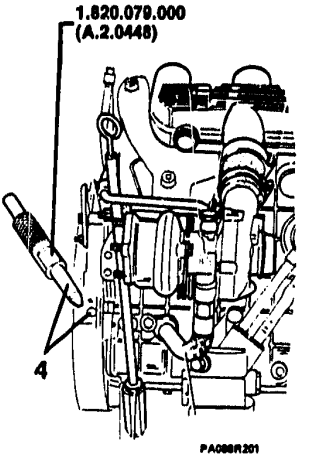

1. Position the key on the injection pump shaft pointing towards the delivery pipe union of the first cylinder.

When installing the injection pump on its coupling, unscrew and remove tool No. 1.821.216.000 which was secured to the casing.

2. Install anew O-ring and fit the injection pump on the cylinder block; position the pump on the three stud bolts then apply the three fixing nuts.
3. Tighten the pump drive gear fixing nut to the prescribed torque.
4. Block the crankshaft rotation by means of flywheel locking toolNo. 1.820.078.000 (A.2.0448), remove the tool at the end of the operation.

INJECTION PUMP
Installation (continued)

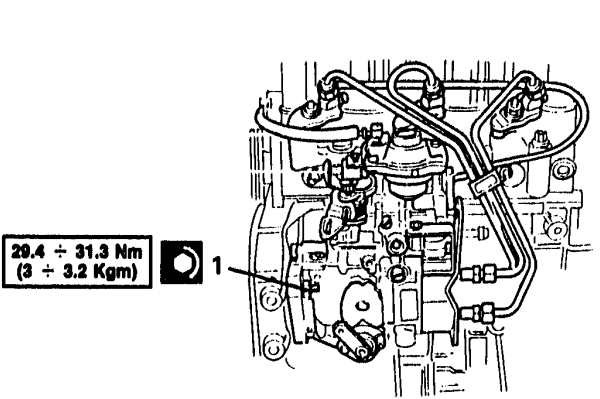

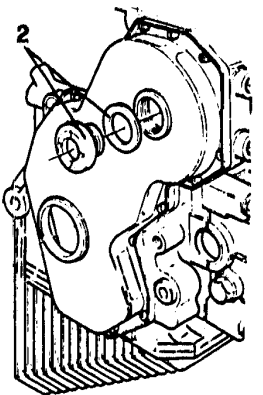

- Proceed to the timing operations of the injection pump,

1. Tighten the injection pump fixing nuts to the prescribed torque.
2. Refit the injection pump drive gear cover and fit a new gasket.

INJECTION PUMP
Installation (continued)

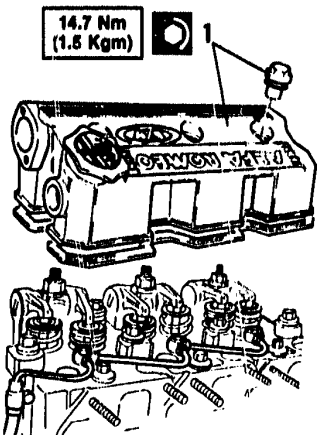

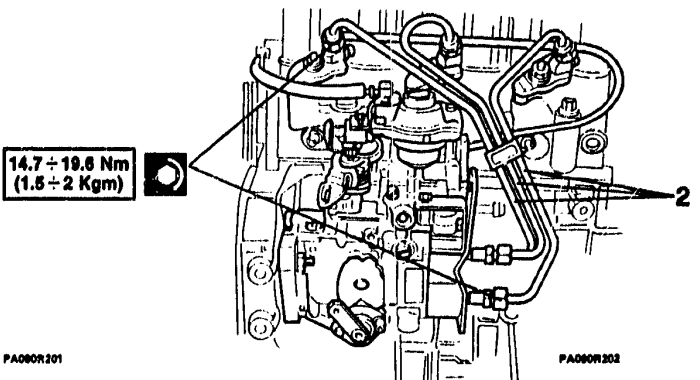

1. Refit the tappets cover, securing it with the relevant nuts, tightened to the prescribed torque.
2. Connect the fuel delivery pipes to the pump and the injectors, then tighten the unions to the prescribed torque.

- Complete the re-assembly by reversing the order of the removal operations and carrying out the following adjustments:

- Bleed the fuel supply circuit from the air
- Adjust the idle speed (see **GR. 00**).
- Adjust the r.p.m. activated microswitch control lever
- Adjust the advance cable

INJECTION PUMP (continued)
Timing

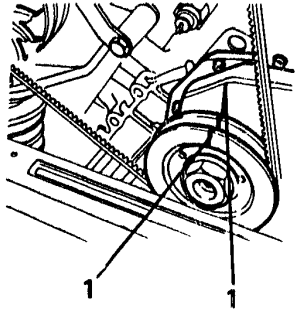

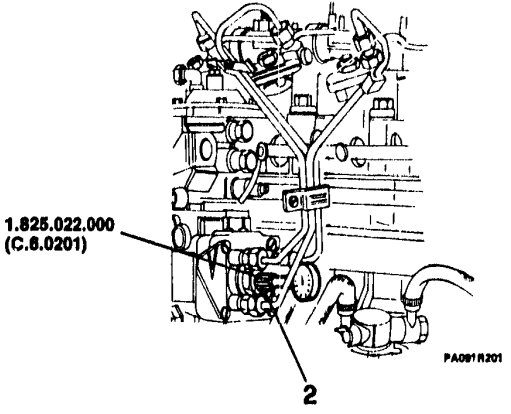

1. Check the alignment of the crankshaft pulley reference mark with the fixed index on the engine front cover, corresponding to the T.D.C. of cylinder No. 1 in injection stroke.

2. Remove the injection pump rear screw and insert tool No. 1.825.022.000 (C.6.0201) equipped with a comparator which must be pre-loaded.

INJECTION PUMP
Timing (continued)

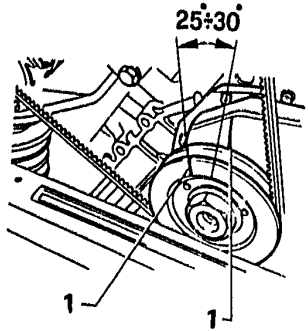

1. Rotate the crankshaft counterclockwise, viewed from front, till the comparator pointer stops, then reset it. This position is obtained with the pumping element at 25° ÷ 30° before the T.D.C.

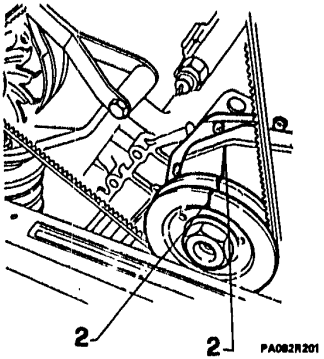

2. Slowly rotate the crankshaft in the direction of run till matching the crankshaft pulley reference marks.

INJECTION PUMP
Timing (continued)

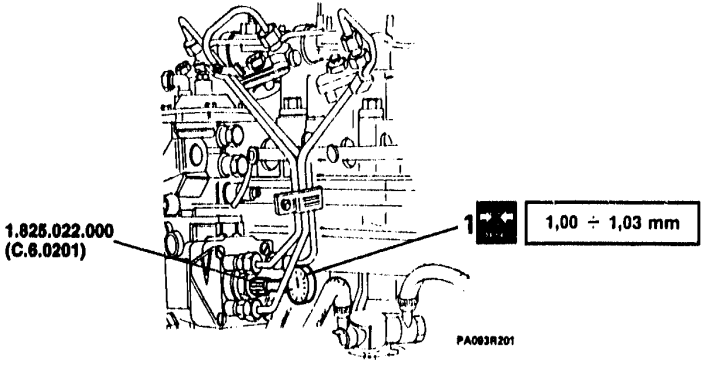

1. Check that the comparator pointer indicates the prescribed displacement value when the crankshaft pulley reference marks are matched.
   - Should the comparator indicate a value different from the prescribed one, unloose the injection pump fixing nut and rotate the pump body till obtaining the above-mentioned value.
   - Remove test tool No. 1.825.022.000 (C.6.0201).

R.P.M.-ACTIVATED MICROSWITCH
Replacement

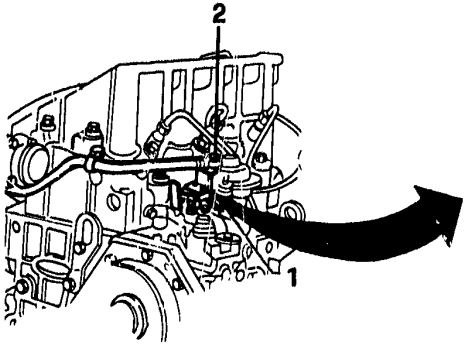

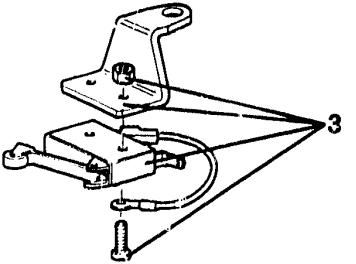

PA094R201

- Disconnect the battery negative cable.
1. Disconnect the cable from the microswitch.
2. Unscrew the union and remove the microswitch complete with its bracket.
3. Unscrew the bolts and separate the microswitch from the bracket.
- Proceed to the installing operations by reversing the removal operations and adjust the microswitch

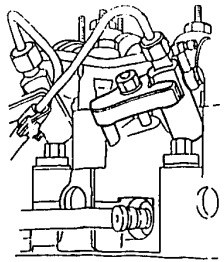

TURBODIESEL ENGINE

FUEL SUPPLY SYSTEM (Continued)

FUEL SUPPLY SYSTEM

CLEANING AND CALIBRATING THE INJECTORS
REPLACING NOZZLES ..... 04 - 104
DRAINING THE FUEL FILTER ..... 04 - 107
REPLACING THE FUEL FILTER CARTRIDGE ..... 04 - 107
BLEEDING AIR FROM THE FUEL SUPPLY SYSTEM ..... 04 - 108
CHECKING AND REPLACING THE GLOW PLUGS ..... 04 - 109

FUEL SUPPLY SYSTEM (continued)

CLEANING AND CALIBRATING THE INJECTORS REPLACING THE NOZZLES

1. Disconnect the connections on the injectors and on the injection pump and remove the pipes.
2. Loosen the nut on the bracket.
3. Remove the bracket securing the injectors from their heads and remove the injectors.
4. Withdraw the pawls from the heads.

- Install the injector on the injector test pump and by applying gradual (to prevent the formation of drops) pressure up to the specified value, check the sealing of the needle.

12740 kPa (127.4 bars; 130 kg/cm^2) maintained for **6 - 7 seconds**

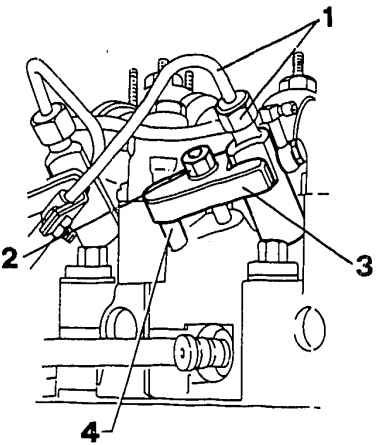

CLEANING AND CALIBRATING THE INJECTORS REPLACING THE NOZZLES (continued)

- If drops are detected, proceed as follows.

a. Disassemble the injectors and clean the inside of the nozzle with a wooden stick and petrol, the needle with soft leather (chamois) and the hole with copper or brass wire ensuring that the shape of the hole is not altered in any way.

b. Reassemble the injector and carry out the following bench tests:

- Check that there are no drops. If there are, replace the nozzle.
- Check that the pressure is within the specified limits.

14700 - 15500 kPa (147 - 155 bar; 150 - 158 kg/cm^2)

If necessary adjust the pressure setting using shims between the spring and injector body. The shims vary in size increasing by 0.05 mm each time, from 0.05 mm up to a maximum of 2 mm.

- If these conditions are not met with, replace the entire injector.

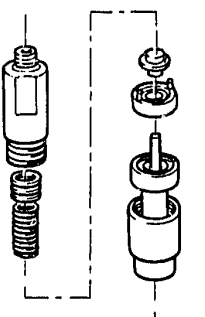

CLEANING AND CALIBRATING THE INJECTORS REPLACING THE NOZZLES (continued)

1. Insert the injectors and new gaskets into their seatings.

Do not allow the point of the needle to touch anything when inserting the injectors.

2. Position the pawls.
3. Install the injector brackets by locking them with the nuts which should then be tightened to the correct torque.
- Connect the fuel delivery pipes to the pump.
4. Screw the connections onto the injectors without tightening them and, using the starter motor, turn the engine until a continuous flow of fuel passes through the loosened connections. Tighten the connectors on the injectors and on the pump to the correct torque.
- Carefully clean the engine with compressed air.

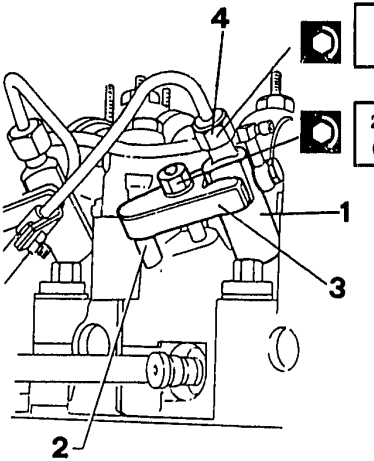

14,7 ÷ 19,6 Nm
(1,5 ÷ 2 Kgm)

24,5 ÷ 29 ,5 Nm
(2,5 ÷ 3,0 Kgm)

FUEL SUPPLY SYSTEM (continued)

DRAINING THE FUEL FILTER

1. Loosen the knob and drain off the water in the fuel filter.
- When neat diesel begins to flow out, screw the knob tightly closed.

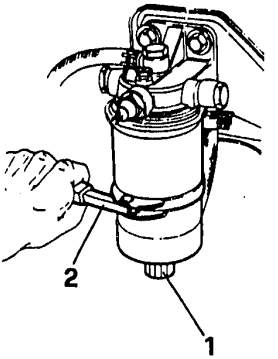

REPLACING THE FUEL FILTER CARTRIDGE.

2. Using an appropriate belt spanner, loosen and remove the filter.

Lubricate the new filter gasket with engine oil and tighten the filter back on using the spanner.

- Bleed air from the supply system.

FUEL SUPPLY SYSTEM (continued)

BLEEDING AIR FROM THE FUEL SUPPLY SYSTEM

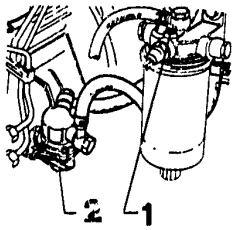

14,7 ÷ 19,6 Nm
(1,5 ÷ 2 Kgm)

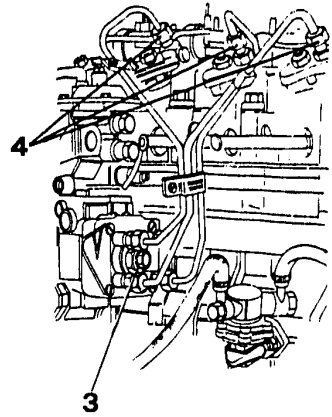

1. Loosen the screw on the fuel filter.
2. Work the lever of the fuel supply pump by hand until the flow of diesel coming out of the hole is continuous.
- Tighten the screw again while maintaining pressure on the lever of the fuel supply pump.
3. Repeat the same operations for the rear screw on the injection pump.
4. Loosen the connectors on the injectors. Turn the engine using the starter motor until the flow of diesel through the loose connections is continuous. Tighten the connections to the correct torque.
- Carefully clean the engine and check that all the system connections are sound.

FUEL SUPPLY SYSTEM (continued)
CHECKING AND REPLACING THE GLOW-PLUGS

- Disassemble the glow-plugs, connect them to the ends of a 12 V power supply and check that they glow. If they do not glow, replace them as follows:
- Open the bonnet and disconnect the negative cable from the battery.
- Loosen the connections and remove the diesel fuel delivery hoses connecting the injection pump and the injectors.

1. Loosen the nuts.
2. Remove the burettes.
3. Loosen and remove the glow-plugs.

- Replace the glow-plugs as and when necessary.
- When refitting, tighten the glow-plugs to the correct torque.
- Screw the connections onto the pipes between the pump and injectors, but do not tighten. Turn the engine using the starter motor until a continuous flow of diesel fuel passes through the connections. Tighten the connections to the correct torque.

14.7 - 19.6 Nm
(1.5 - 2 kgm)

22,5 ÷ 24,5 Nm
(2,3 ÷ 2,5 Kgm)

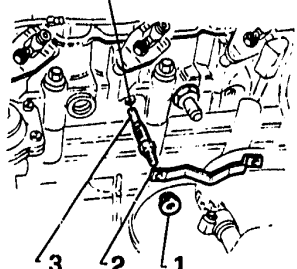

TURBODIESEL ENGINE

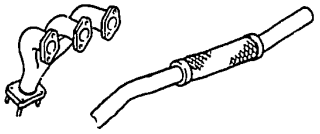

CALIBRATIONS AND ADJUSTMENTS EXHAUST SYSTEM

CALIBRATION AND ADJUSTMENTS

R.P.M. ACTIVATED MICROSWITCH CONTROL LEVER ADJUSTMENT ..... 04 - 110
MANUAL ADVANCE CONTROL ADJUSTMENT ..... 04 - 112
FUEL SUPPLY CIRCUIT TIGHTNESS AND PRESSURE CHECK ..... 04 - 113
CHECKING EXHAUST SMOKING ..... 04 - 114
ACCELERATOR CONTROL ADJUSTMENT ..... 04 - 116

EXHAUST SYSTEM

ASSY ..... 04 - 117
FRONT PART ..... 04 - 118
INTERMEDIATE PART ..... 04 - 119
REAR PART ..... 04 - 120
MANIFOLD ..... 04 - 121

CALIBRATIONS AND ADJUSTMENTS

R.P.M.-ACTIVATED MICROSWITCH CONTROL LEVER ADJUSTMENT

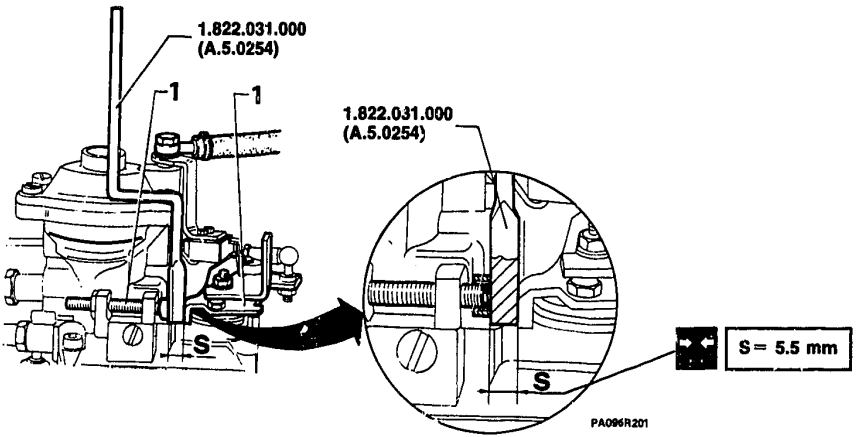

- Adjust the idle spped (see **GR. 00**).

1. Move the accelerator control lever and position feeler gauge No. 1.822.031.000 (A.5.0254) between the lever and the idle speed adjusting screw, so as to obtain the prescribed "S" dimension.

CALIBRATIONS AND ADJUSTMENTS

R.P.M.-ACTIVATED MICROSWITCH CONTROL LEVER ADJUSTMENT (continued)

1. Unplug the connector from the microswitch.
- Connect a test lamp to the microswitch lead and the battery positive post.
2. By means of wrench No. 1.822.030.000 (A.5.0253) unloose the screw fixing the bracket to the accelerator control lever.
3. Move closer or farer the microswitch control bracket, till de-actuating or actuating the microswitch, that is till the test lamp turns on or off.
- In the test lamp switching position, block the previously slackened screw, by means of wrench No. 1.822.030.000 (A.5.0253).
- Remove the tools and plug the connector in the microswitch.

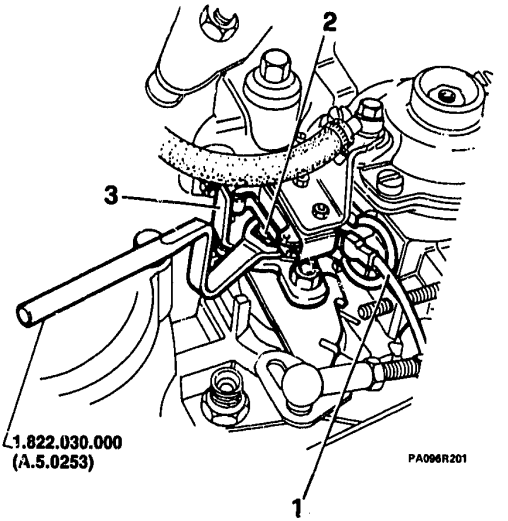

CALIBRATIONS AND ADJUSTMENTS (continued)

MANUAL ADVANCE CONTROL ADJUSTMENT

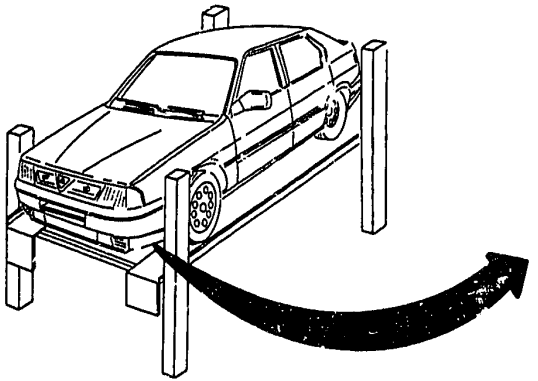

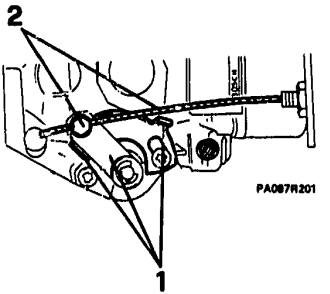

1. Act on the advance control lever inside the vehicle and make sure that in the two extreme positions, the control lever on the injection pump rotates till the two limit stops.

2. Should the travel be incomplete, lift the vehicle on a lift platform and adjust the advance cable travel by unscrewing the fixing nut, adjusting the cable, then tightening the nut again.

CALIBRATIONS AND ADJUSTMENTS (continued)

FUEL SUPPLY CIRCUIT TIGHTNESS AND PRESSURE CHECK

1. Disconnect the fuel delivery pipe from the fuel pump.
2. By means of a "T" adapter, connect a pressure gauge to the ends of the previously disconnected delivery line.

- Bleed the air
- Start up the engine: at idle speed, check that the fuel pressure value is:

20 kPa (0.2 bar; 0.2 Kg/cm²)

With the pressure gauge connected and the engine at idle speed, check that the fuel supply pipes and unions are free from leakages.

- If the fuel pressure does not reach the prescribed values and no leakages are detected, check the fuel filter and/or the correct pump operation.



CALIBRATION AND ADJUSTMENT (continued)

CHECKING EXHAUST SMOKING

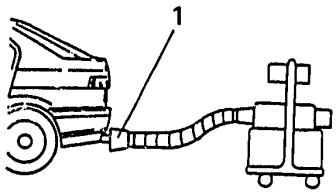

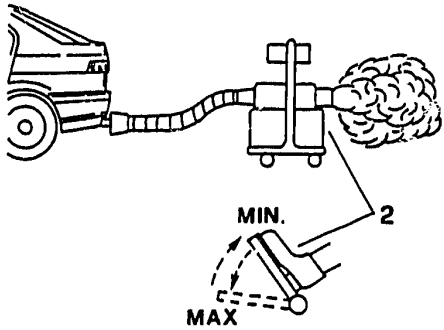

1. Insert the exhaust gas sampling hose of the opacimeter in the end of the exhaust pipe.
   - Allow the engine to reach normal running temperature and switch off any devices which may reduce the smoke level.
2. Rev the engine to the permitted maximum three times consecutively.



CHECKING EXHAUST SMOKING (continued)

1. Rev the engine five times and note the values obtained for each acceleration.

When accelerating the minimum r.p.m must not fall below 1,000 r.p.m.

- Calculate the average and check that the opacity is within the specified limits.

Limit of opacity permitted by law	
new vehicles	< 50%
Vehicles already in circulation	< 70%

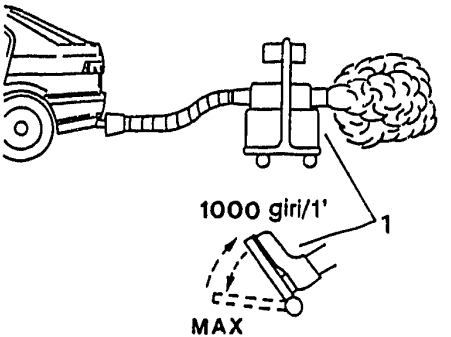

CALIBRATIONS AND ADJUSTMENTS (continued)

ACCELERATOR CONTROL ADJUSTMENT

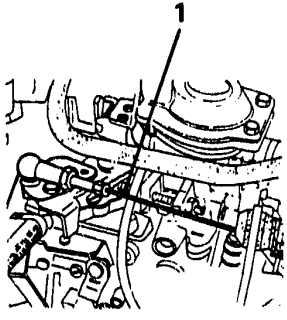

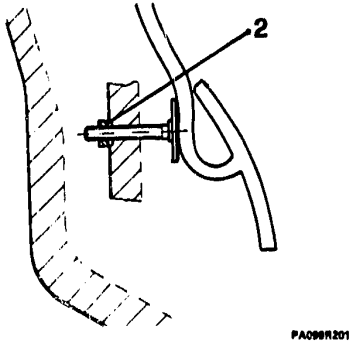

1. Check that the accelerator control cable slides freely inside its sheath.
- Press the accelerator pedal fully down to its limit stop, and check that also the injection pump lever reaches its limit stop against the engine r.p.m. adjusting screw.

2. If this condition is not verified, act on the accelerator pedal limit stop, placed under the pedal itself, so as to vary the pedal travel till reaching the required adjustment value.

Accelerator control travel
30.5 ÷ 31.5 mm

EXHAUST SYSTEM

ASSY

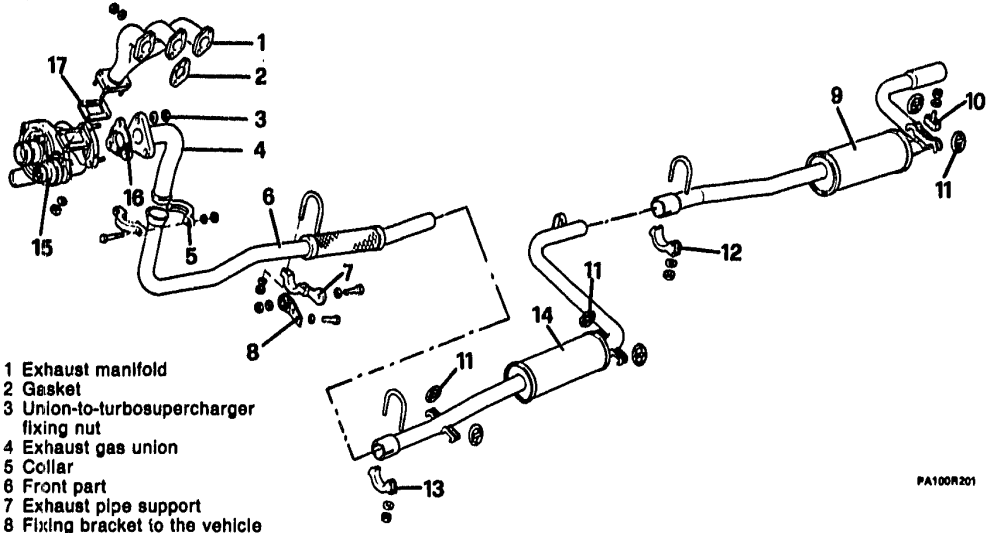

1 Exhaust manifold
2 Gasket
3 Union-to-turbosupercharger fixing nut
4 Exhaust gas union
5 Collar
6 Front part
7 Exhaust pipe support
8 Fixing bracket to the vehicle
9 Silencer - rear part
10 Rubber pad
11 Rubber supporting rings
12 Clamp
13 Clamp
14 Silencer - intermediate part
15 Turbosupercharger
16 Gasket
17 Gasket

EXHAUST SYSTEM (continued)

FRONT PART

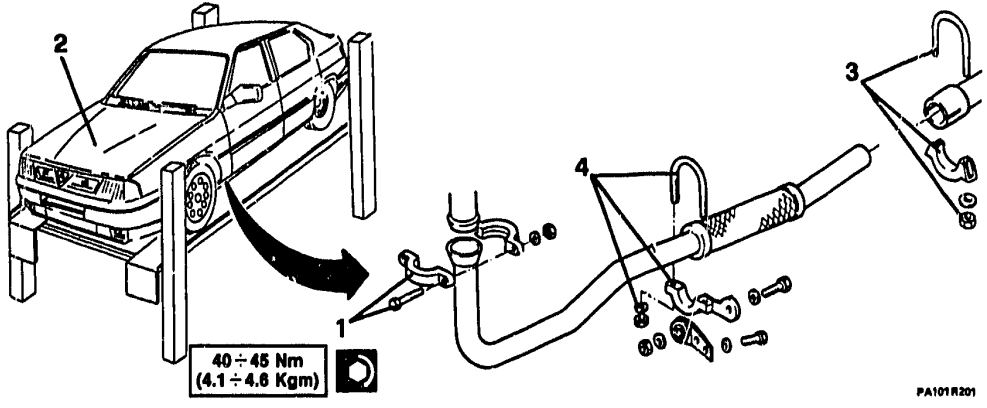

1. Unloose the fixing bolt and disconnect the collar.
2. Place the vehicle on a lift platform and lift it.
3. Disconnect the front part from the intermediate part by slackening the fixing clamp.
4. Uphold the front part, unscrew the supporting bracket fixing screws and remove the front part.

EXHAUST SYSTEM (continued)

INTERMEDIATE PART

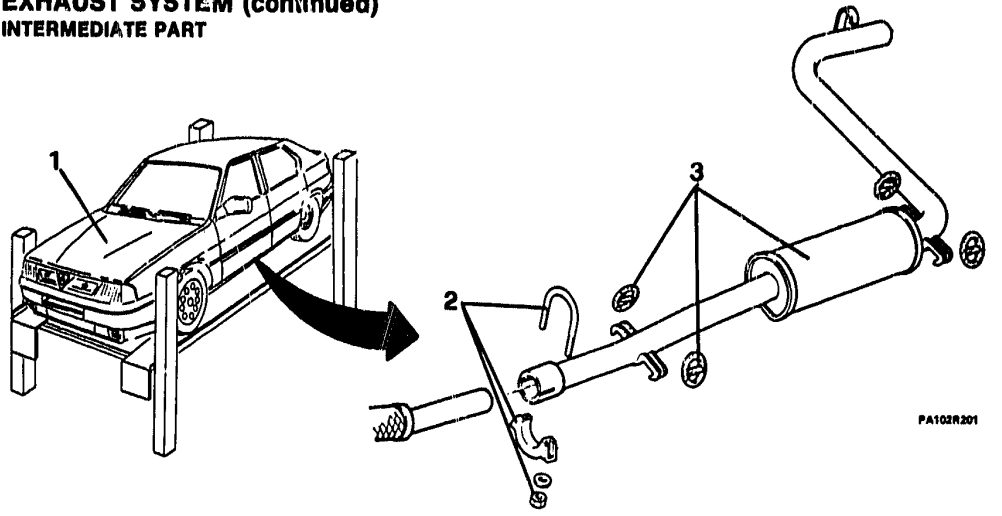

1. Place the vehicle on a lift platform and lift it.
   - Remove the rear part
2. Unloose the clamp fixing the intermediate part to the front one.
3. Remove the intermediate part by releasing it from the rubber spring rings.

EXHAUST SYSTEM (continued)

REAR PART

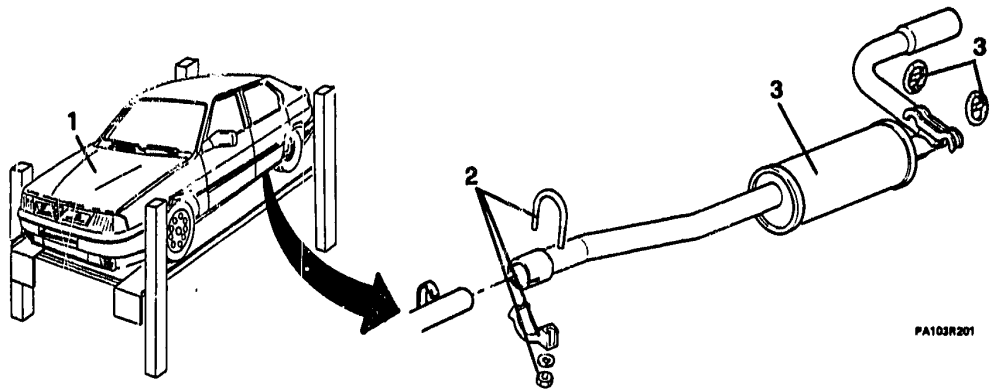

1. Place the vehicle on a lift platform and lift it.
2. Unloose the clamp connecting the intermediate part to rear one.
3. Remove the rear part after having released it from the rubber spring rings.

EXHAUST SYSTEM (continued)

MANIFOLD

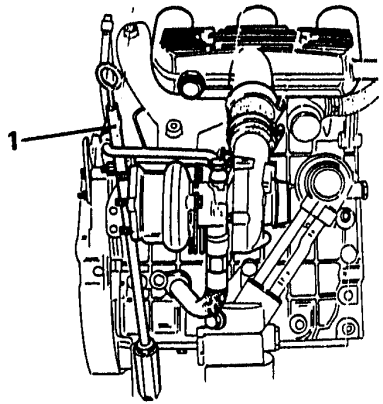

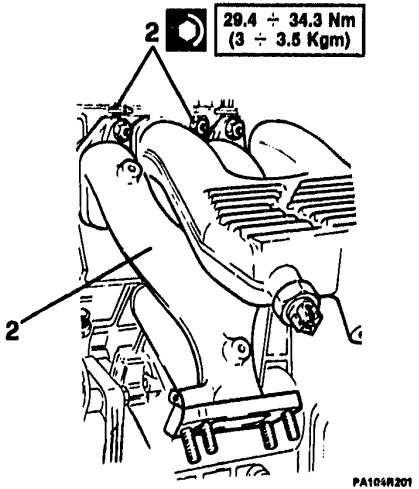

- Remove the turbosupercharger.
1. Unscrew the oil dipstick fixing nut and disconnect the dipstick from the manifold.
2. Unscrew the nuts fixing the manifold to the cylinder heads and remove the manifold

TURBODIESEL ENGINE

TCS

TECHNICAL CHARACTERISTICS AND SPECIFICATIONS

SPECIFIC TOOLS

TECHNICAL CHARACTERISTICS AND SPECIFICATIONS

TURBOSUPERCHARGER ..... 04 - 122
FUEL SUPPLY PUMP ..... 04 - 122
INJECTION ..... 04 - 123
CHECKS AND ADJUSTMENTS ..... 04 - 124
Engine r.p.m. ..... 04 - 124
Filter with fuel pre-heating device ..... 04 - 124
Turbosupercharger ..... 04 - 125
Fuel supply pump ..... 04 - 125
Injectors ..... 04 - 126
Accelerator ..... 04 - 126
FLUIDS AND LUBRICANTS ..... 04 - 127
SEALANTS AND ADHESIVES ..... 04 - 127
TIGHTENING TORQUES ..... 04 - 128
SPECIFIC TOOLS ..... 04 - 129

TECHNICAL CHARACTERISTICS AND SPECIFICATIONS

TURBOSUPERCHARGER

TECHNICAL DATA	ENGINE
	1800
	VM96A
Manufacturer	K K K
Type	–

FUEL SUPPLY PUMP

TECHNICAL DATA	ENGINE
	1800
	VM96A
Manufacturer	Corona
Type	E 2258

INJECTION

TECHNICAL DATA		ENGINE 1800 VM96A
Pump		
	Manufacturer	BOSCH
	Type	HR 392 SHIR
Injectors		
	Manufacturer	BOSCH
	Type	KBE 58 S4/4
Pre-heating glow plugs		
	Manufacturer	BOSCH
	Type	0.250.201.012
Timing (advance) degrees before T.D.C.	Fixed (1)	8°
Injection sequence		1 – 3 – 2

(1) For the timing check, set piston No. 1 at T.D.C. at the end of the compression stroke and check, by means of a special comparator, that the pump plunger has run for a travel of 1.00 ÷ 1.03 mm.

CHECKS AND ADJUSTMENTS

Engine r.p.m.

Unit of measure: r.p.m.

CHECK VALUES	ENGINE 1800 VM96A
Engine idle speed (1)	900 ±25
Engine peak r.p.m. (unloaded)	4000

(1) To be measured with hot engine, gearbox in neutral and clutch engaged.

Filter with fuel pre-heating device

CHECK VALUES	ENGINE 1800 VM96A
Fuel pre-heating resistance actuating temperature (inside the filter)	2°C ÷ 6°C

CHECKS AND ADJUSTMENTS (continued)

Turbosupercharger

CHECK VALUES			ENGINE 1800 VM96A
Turbosupercharger rotor clearance	End float	mm	0.01
	Side clearance	mm	0.03

Fuel supply pump

CHECK VALUES			ENGINE 1800 VM96A
Delivery pressure	Minimum allowed value	kPa (bar; kg/cm²)	20 (0.2; 0.2)
	Value at null delivery	m H_2O	0.30 ÷ 0.40
Delivery (at 2500 r.p.m. of the pump)		l/h	80

CHECKS AND ADJUSTMENTS (continued)

Injectors

Unit of measure: kPa (bar; kg/cm²)

CHECK VALUES	ENGINE
	1800
	VM96A
Calibration pressure	14700 ÷ 15500 (147 ÷ 155; 150 ÷ 158)
Tightness test pressure (1)	12740 (127.4; 130)

(1) Apply pressure gradually, dripping is not permitted.

Accelerator

Unit of measure: mm

CHECK VALUES	ENGINE
	1800
	VM96A
Accelerator control adjustment value: accelerator cable travel	30,5 ÷ 31,5

FLUIDS AND LUBRICANTS

APPLICATION	TYPE	DENOMINATION	Q.TY
Bush on the accelerator pedal rotation pin	GREASE	AGIP Grease 15	—
Accelerator pedal spring	GREASE	ISECO Molykote Paste G	—
Accelerator pedal shaft (on support rubbers)	GREASE	ISECO Molykote Longterm N. 2 ISECO Molykote Paste G	— —
Accelerator pedal boot (only for L.H. drive vehicles)	GREASE	REINACH: E 10 Tac	—

SEALANTS AND ADHESIVES

APPLICATION	TYPE	DENOMINATION	Q.TY
Cylinder block flange for injection pump attachment	MASTIC	LOWAC PERFECT SEAL	—

TIGHTENING TORQUES

Item \ Unit of measure	Nm	kgm
Injection pump fixing nuts	29,4 ÷ 31,3	3 ÷ 3,2
Injector fixing nut	24,5 ÷ 29,4	2,5 ÷ 3
Injection pump drive gear fixing nut	88,2	9
Fuel injection pipe unions	14,7 ÷ 19,6	1,5 ÷ 2
Turbosupercharger fixing nut	24,5 ÷ 27,4	2,5 ÷ 2,8
Exhaust gas union-to-turbosupercharger fixing nuts and screws	32	3,3
Fuel filter union securing screws	17 ÷ 21	1,7 ÷ 2,1
Unions-to-fuel pump securing screws	17 ÷ 21	1,7 ÷ 2,1
Tappets cover securing nuts	14,7	1,5
Exhaust pipe collar securing bolts	40 ÷ 45	4,1 ÷ 4,6
Manifold-to-cylinder head securing nuts	29,4 ÷ 34,3	3 ÷ 3,5

SPECIFIC TOOLS

1.820.078.000 (A.2.0448)	Flywheel locking tool	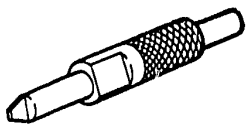 PA112R201
1.825.022.000 (C.6.0201)	Comparator holder for injection pump timing (for timing check on-vehicle)	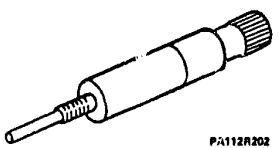 PA112R202
1.821.216.000	Puller for injection pump	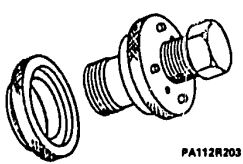 PA112R203

SPECIFIC TOOLS (continued)

1.822.030.000 (A.5.0253)	Wrench for r.p.m.-actuated microswitch control lever screw	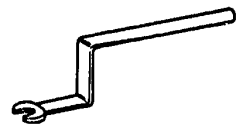 PA112R201
1.822.031.000 (A.5.0254)	5.5 mm shim for microswitch control lever adjustment	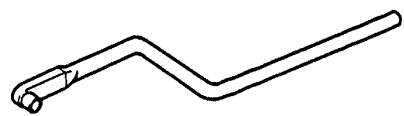 PA112R202

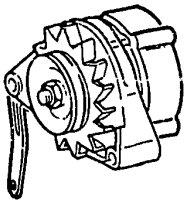

16 VALVE ELECTRONIC INJECTION ENGINE

STARTING, CHARGING SYSTEM

TECHNICAL CHARACTERISTICS AND SPECIFICATIONS

STARTING, CHARGING SYSTEM

ALTERNATOR ..... 05 - 1
Removal - Installation ..... 05 - 1
STARTING MOTOR ..... 05 - 2
Removal - Installation ..... 05 - 2
IGNITION COIL ..... 05 - 3
Removal - Installation ..... 05 - 3
IGNITION DISTRIBUTOR ..... 05 - 4
Removal - Installation ..... 05 - 4
ELECTRONIC CONTROL UNIT (MOTRONIC ML4.1) ..... 05 - 5
Removal - Installation ..... 05 - 5

TECHNICAL CHARACTERISTICS AND SPECIFICATIONS

Starting motor ..... 05 - 6
Alternator ..... 05 - 6
Ignition coil ..... 05 - 6
Spark plugs ..... 05 - 7
Battery ..... 05 - 7
Ignition distributor ..... 05 - 7
FLUIDS AND LUBRICANTS ..... 05 - 8
TIGHTENING TORQUES ..... 05 - 8

STARTING, CHARGING SYSTEM

ALTERNATOR

Removal - Installation

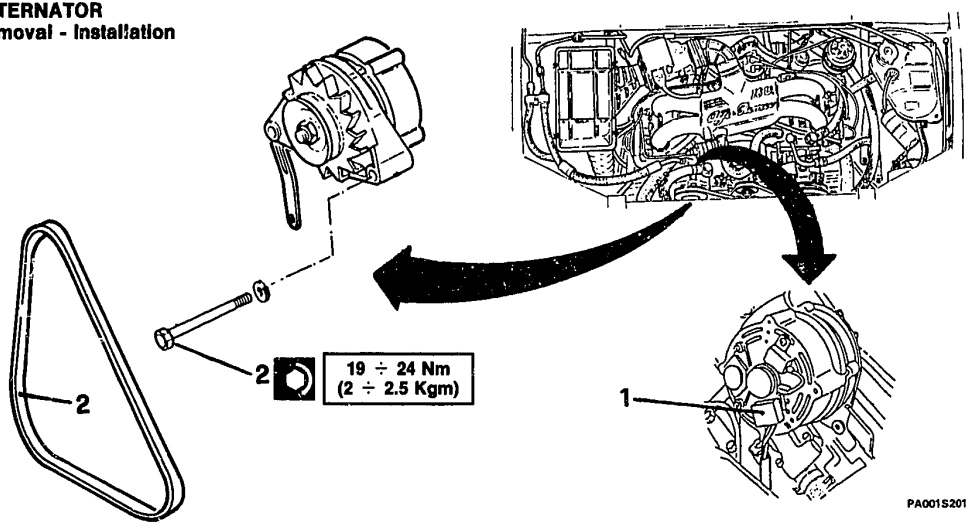

- Disconnect the battery negative cable.
1. Unplug the connector from the alternator.
2. Slacken the two bolts fixing the alternator and remove the driving belt.
- Completely unscrew the bolts and remove the alternator.
- When re-assembling, adjust the tensioning of the alternator driving belt (see **GR. 00**).

STARTING MOTOR

Removal - Installation

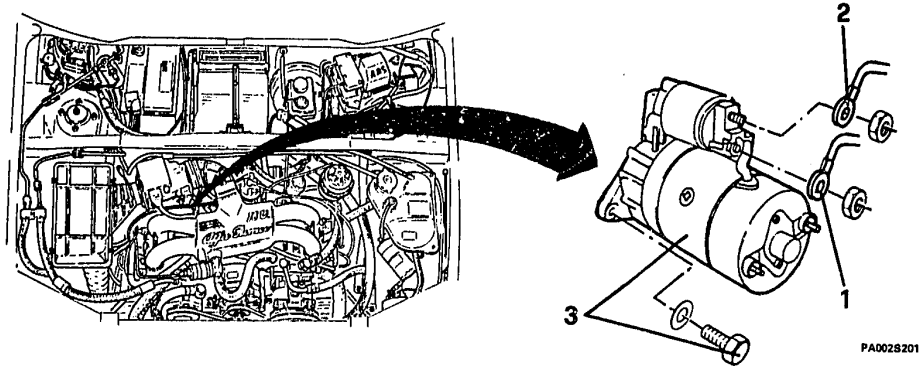

- Disconnect the battery negative cable.
- Remove the engine bonnet (see **GR.56**)
- Remove the air filter complete assy (see **GR.04**)
- Remove the air intake box (see **GR.04**)

1. Disconnect the energizing cable from the starting motor.
2. Disconnect the supply cable from the starting motor.
3. Unscrew the two bolts fixing the starting motor, then remove the motor.

IGNITION COIL
Removal - Installation

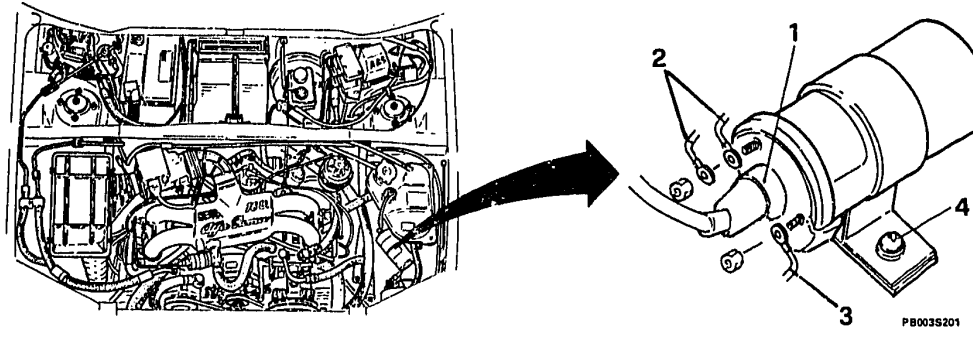

- Disconnect the battery negative cable.
1. Disconnect the high-voltage cable from the coil.
2. Disconnect the low-voltage cable and the rev. counter cable.
3. Disconnect the signal-to-electronic control unit cable from the coil.
4. Unscrew the two clamp fixing screws and remove the coil.

IGNITION DISTRIBUTOR
Removal - Installation

8 ÷ 10 Nm
(0,8 ÷ 1,0 Kgm)

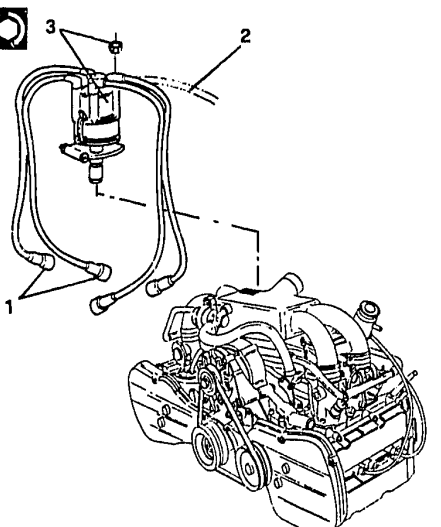

PB004S701

- Disconnect the battery negative cable.
1. Disconnect the cables from the spark plugs.
2. Disconnect the high-voltage cable from the coil.
3. Remove the distributor complete with cap and cables.

ELECTRONIC CONTROL UNIT (MOTRONIC ML4.1)

Removal - Installation

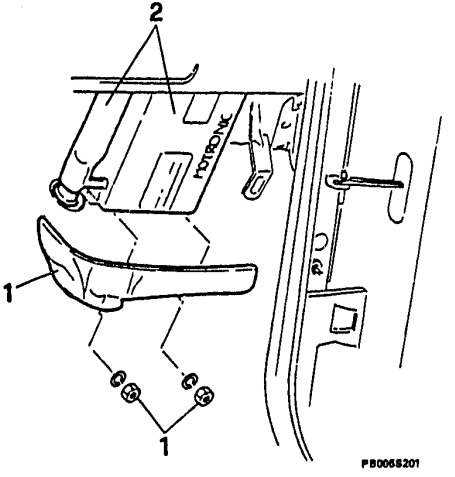

- Disconnect the battery negative cable.
- Remove the dashboard lower part right trim (see **GR. 66**).

1. Unscrew the two fixing nuts and remove the protection, then remove the electronic control unit from its seat.
2. Unplug the connector from the electronic control unit and remove the unit.

TECHNICAL CHARACTERISTICS AND SPECIFICATIONS

Starting motor

Type	BOSCH
Capacity	0.85 kW

Alternator

Type	BOSCH
Capacity	65 A

Ignition coil

Type	BOSCH
Primary winding voltage	12 V

Spark plugs

Type	Without catalytic converter	BOSCH F7DTC
	With catalytic converter	NGK PFR6B

Battery

Type	FIAMM		SCAINI		MAGNETI-MARELLI	
Capacity	50 Ah	55 Ah	50 Ah	55 Ah	50 Ah	55 Ah
Discharge current	225 A	255 A	225 A	255 A	225 A	255 A

Ignition distributor

Type	BOSCH
Firing order	1 - 3 - 2 - 4

FLUIDS AND LUBRICANTS

Application	Type	Denomination	Q.TY
Spark plug thread	OIL	ISECO Molykote A	-

TIGHTENING TORQUES

Item \ Unit of measure	Nm	Kgm
Spark plug tightening in oil ISECO: Molykote A	25 ÷ 34	2.5 ÷ 3.5
Alternator fixing bolt	19 ÷ 24	2 ÷ 2.5
Nut securing distributor	8 to 10	0.8 to 1.0

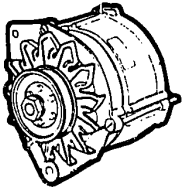

TURBODIESEL ENGINE

STARTING, CHARGING SYSTEM

TECHNICAL CHARACTERISTICS AND SPECIFICATIONS

STARTING, CHARGING SYSTEM

ALTERNATOR ..... 05 - 9
Removal - Installation ..... 05 - 9
STARTING MOTOR ..... 05 - 10
Removal - Installation ..... 05 - 10

TECHNICAL CHARACTERISTICS AND SPECIFICATIONS

Alternator ..... 05 - 11
Starting motor ..... 05 - 11
Battery ..... 05 - 11
TIGHTENING TORQUES ..... 05 - 12

STARTING, CHARGING SYSTEM

ALTERNATOR

Removal - Installation

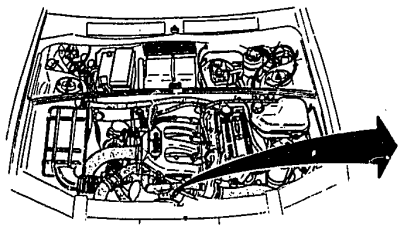

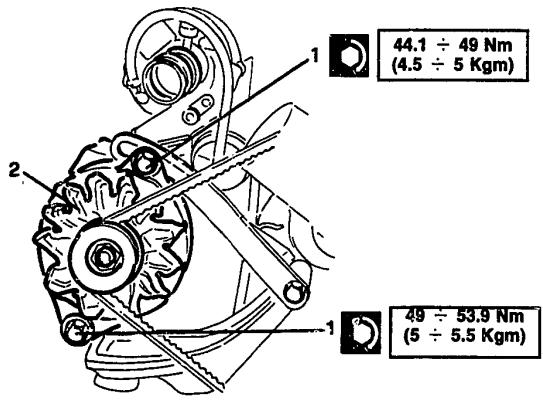

PA009S201

- Disconnect the battery negative cable.
- Unplug the connector from the alternator.

1. Slacken the alternator fixing bolts and remove the driving belt.

2. Completely unscrew the bolts and remove the alternator.

- When re-assembling, adjust the tensioning of the alternator driving belt (see **GR. 00**).

STARTING MOTOR

Removal - Installation

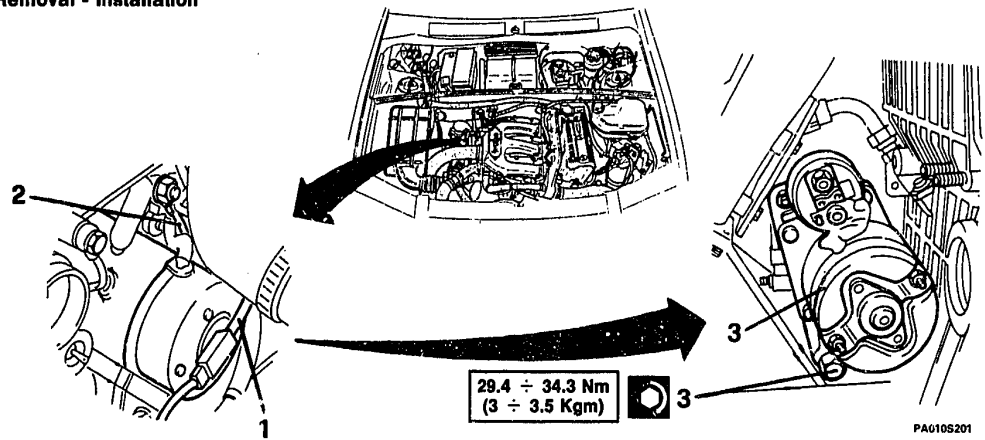

- Disconnect the battery negative cable.
1. Disconnect the junction of the starting motor energizing cable.
2. Disconnect the starting motor supply cable.
3. Unscrew the three screws fixing the starting motor and remove the motor.

TECHNICAL CHARACTERISTICS AND SPECIFICATIONS

Alternator

Type	BOSCH
Capacity	65 A

Starting motor

Type	BOSCH
Capacity	2.2 kW

Battery

Type	FIAMM	APD-ARTICA	MAGNETI-MARELLI
Capacity	70 Ah	70 Ah	70 Ah
Discharge current	380 A	380 A	380 A

TIGHTENING TORQUES

Item \ Unit of measure	Nm	Kgm
Alternator upper fixing bolt	44.1 ÷ 49	4.5 ÷ 5
Alternator lower fixing bolt	49 ÷ 53.9	5 ÷ 5.5
Starting motor fixing screws	29.4 ÷ 34.3	3 ÷ 3.5

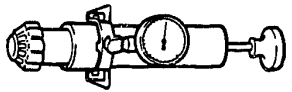

16 VALVE ELECTRONIC INJECTION ENGINE

COOLING CIRCUIT

TECHNICAL CHARACTERISTICS AND SPECIFICATIONS

COOLING CIRCUIT

ASSY ..... 07 - 1
DESCRIPTION ..... 07 - 2
WATER PUMP ..... 07 - 3
Removal - Installation ..... 07 - 3
THERMOSTAT ..... 07 - 5
Removal - Installation ..... 07 - 5
Checks and inspections ..... 07 - 6
RADIATOR ..... 07 - 7
Assy ..... 07 - 7
Removal - Installation ..... 07 - 8
ELECTRIC FAN ENABLING THERMAL CONTACT ..... 07 - 10
Replacement ..... 07 - 10
CIRCUIT TIGHTNESS CHECK ..... 07 - 11
Hydraulic circuit tightness test ..... 07 - 11
Pressurized cap tightness test ..... 07 - 12
CIRCUIT FILLING ..... 07 - 13

TECHNICAL CHARACTERISTICS AND SPECIFICATIONS

Cooling circuit ..... 07 - 14
Coolant ..... 07 - 14
SEALANTS AND FIXING COMPOUNDS ..... 07 - 15
TIGHTENING TORQUES ..... 07 - 15

COOLING CIRCUIT ASSY

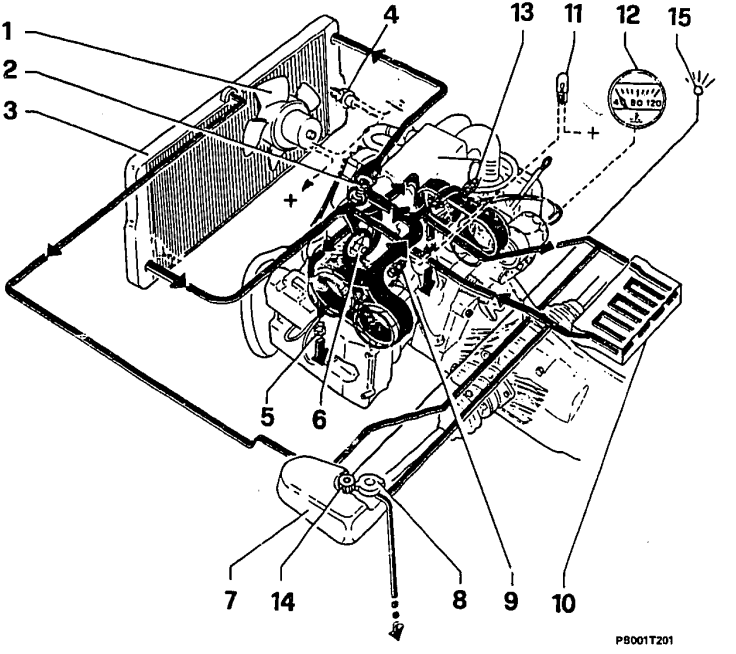

1 Electric fan
2 Thermostat
3 Radiator
4 Electric fan control thermal contact
5 Coolant drain plug
6 Pump
7 Expansion tank
8 Expansion tank cap
9 Coolant temperature warning light thermal contact
10 Heater
11 Coolant temperature warning light
12 Coolant temperature indicator
13 Thermistor for coolant temperature indicator
14 Fluid level sensor for Alfa Control
15 Coolant minimum level warning light for Alfa Control

DESCRIPTION

The system is of the water cooling type with forced circulation by centrifugal pump belt-driven by the crankshaft.
A thermostat is fitted onto the manifold outlet which allows the engine to reach it normal operating temperature and a quicker warming up at cold starts, since the thermostatic valve only opens when the water reaches a temperature of approx. 80°C.
In addition to the air ram effect, the radiator is also cooled by an electric fan controlled by a thermal contact placed on the radiator.
The system is provided with a water temperature transmitter installed on the intake manifold and connected to the indicator on the instrument panel; a water temperature thermal contact, secured to the head, and connected to the warning light on the instrument panel, which visually warn that the maximum allowed temperature of the coolant (105°C) has been exceeded.

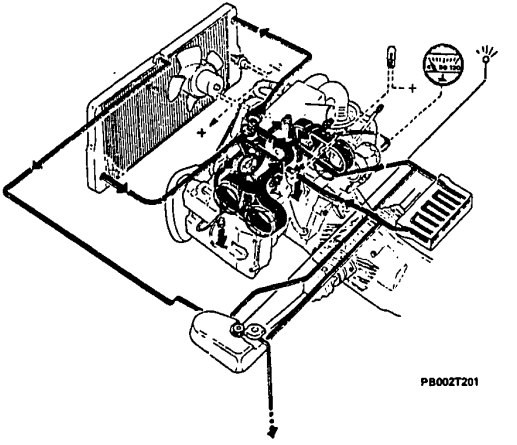

PB002T201

WATER PUMP

Removal - Installation

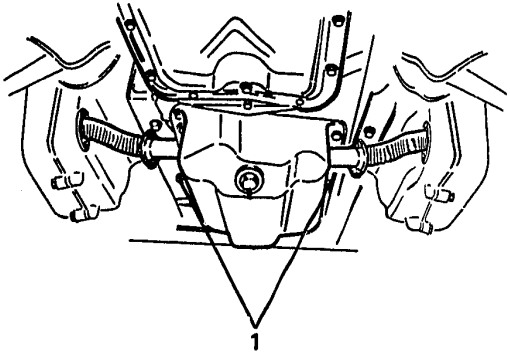

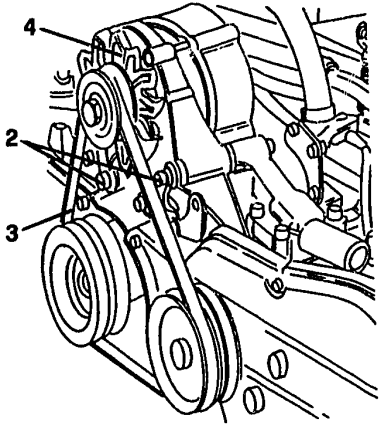

PA003T201

1. Drain the coolant by removing the two plugs placed under the cylinder block.
2. Slacken the alternator fixing bolts.
3. Remove the driving belt.
4. Remove the alternator by completely unscrewing the fixing bolts.

WATER PUMP

Removal - installation (continued)

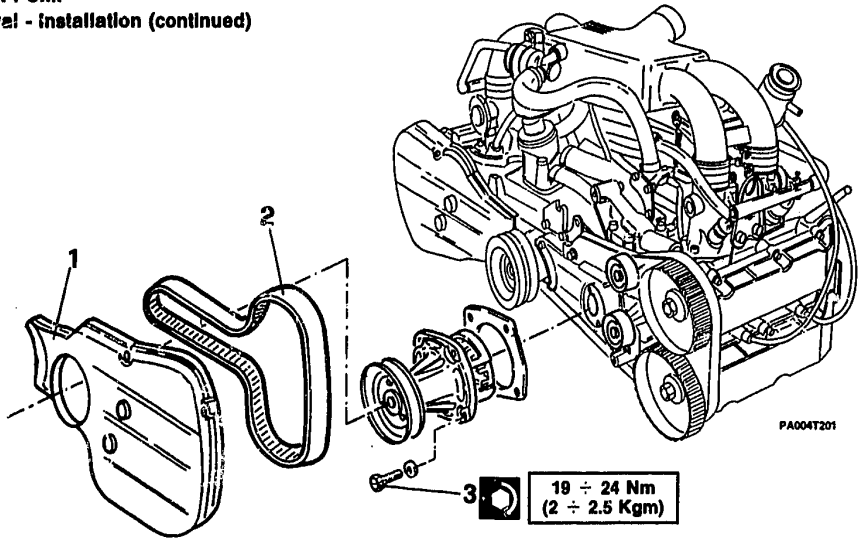

1. Remove the front guard by unscrewing the fixing screws.
2. Remove the left timing belt.
3. Unscrew the four fixing screws and remove the pump with its gasket.

- When re-assembling, proceed to the timing adjustment of the timing belt and to the tensioning operations for the alternator - water pump belt

THERMOSTAT
Removal - Installation

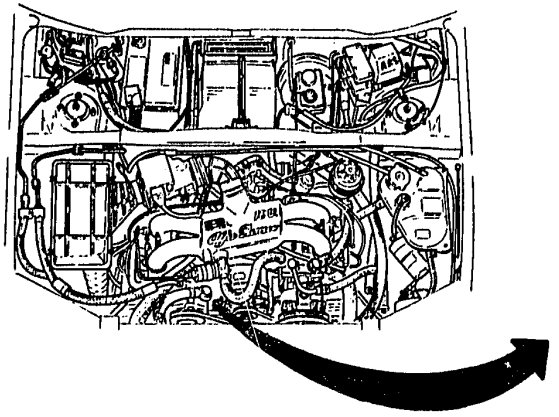

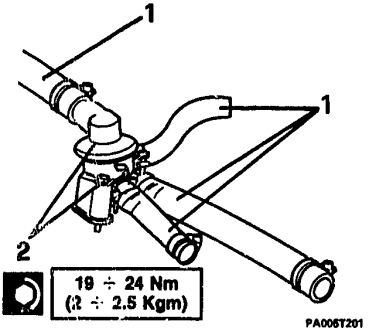

- Drain the coolant from the cooling circuit.
1. Disconnect the coolant sleeves from the thermostat.
2. Unscrew the two fixing screws and remove the thermostat.

THERMOSTAT (continued)
Checks and inspections

1. Install the thermostat on a special test equipment.
2. Fill the tank with water and turn on the equipment to let it reach its test temperature.

- Check the thermostat setting temperature

Opening start	84 ÷ 88°C
Maximum opening	98°C
Valve travel	⩾ 7 mm

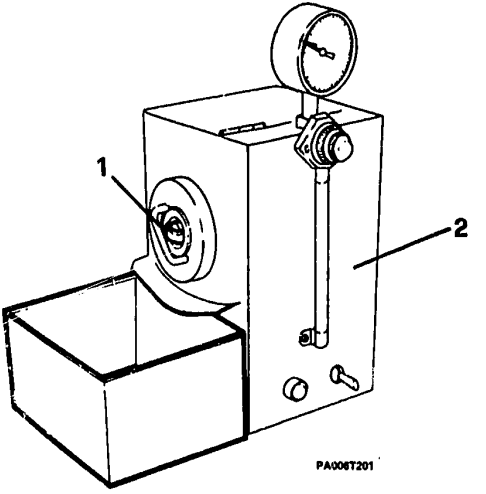

RADIATOR
Assy

1 Electric fan
2 Shroud
3 Gasket
4 Support
5 Breather pipe
6 Coolant outlet sleevequa
7 Thermal contact
8 Gasket
9 Gasket
10 Rubber pad
11 Radiator
12 Coolant inlet sleeve
13 Clip
14 Washer
15 Rubber pads
16 Spacer
17 Washer
18 Clip
19 Flexible support
20 Spacer
21 Washer

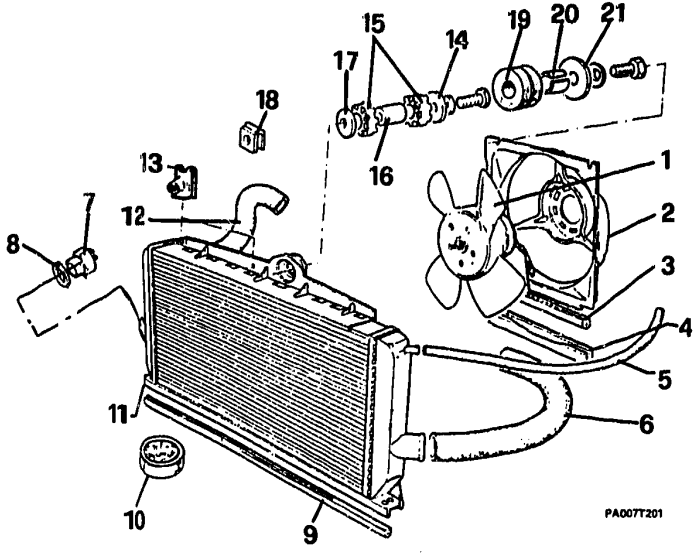

RADIATOR (continued)
Removal - Installation

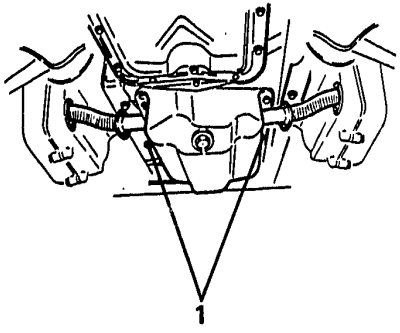

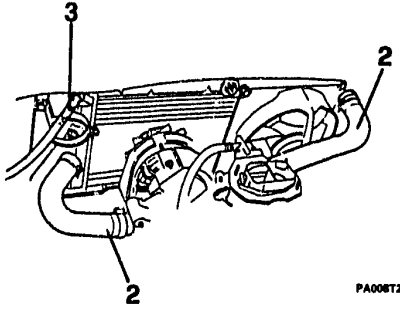

- Disconnect the battery negative cable.
1. Unscrew the plugs placed on the cylinder block lower side and drain the coolant.
2. Loosen the fixing clamps and disconnect the two coolant inlet and outlet sleeves from the radiator.
3. Loosen the clamp and remove the drainage hose from the radiator.

RADIATOR
Removal - Installation (Continued)

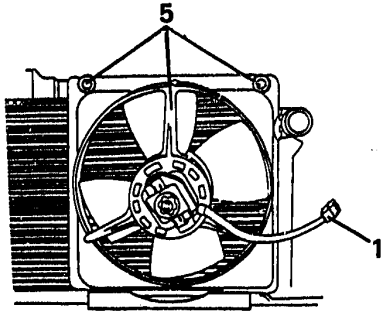

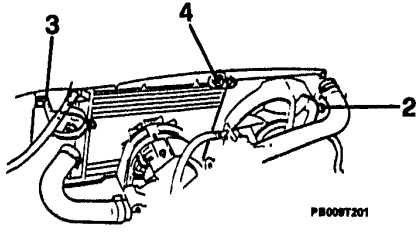

1. Disconnect electric fan electrical connection.
2. Disconnect the two electrical connections of thermal contact.
3. Unscrew the air intake supporting bracket nut and remove it.
4. Remove screw and associated washers securing radiator.
- Remove radiator from engine compartment.
5. Working at the bench, unscrew the screws securing the electric fan; then remove fan sliding it out from its lower channel.

ELECTRIC FAN ENABLING THERMAL CONTACT

Replacement

≤ 50 Nm
(≤ 5 Kgm)

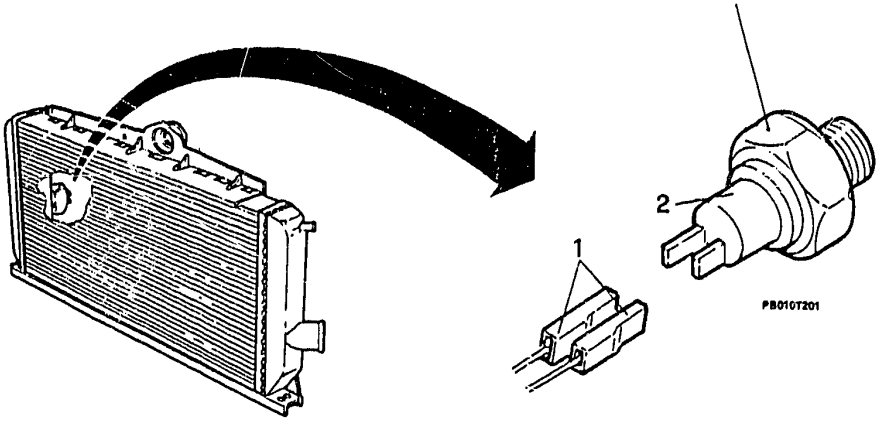

- Disconnect the batteyr negative cable.
- Completely drain the cooling circuit.

1. Disconnect the electrical connections.
2. Remove the thermal contact and check the temperature setting. If incorrect values are met, replace the thermal contact.

Electric fan intervention temperature	**92 ± 2°C**
Electric fan switching off temperature	**87 ± 2°C**

CIRCUIT TIGHTNESS CHECK

Hydraulic circuit tightness test

Hydraulic circuit check pressure
107.9 kPa (1.08 bar; 1.1 Kg/cm²)

- Unscrew the pressurized cap from the expansion tank.

1. Apply the hydraulic circuit test tool to the expansion tank filler neck.
2. Apply pressure to the circuit and check on the pressure gauge that the pressure ranges within the prescribed value.

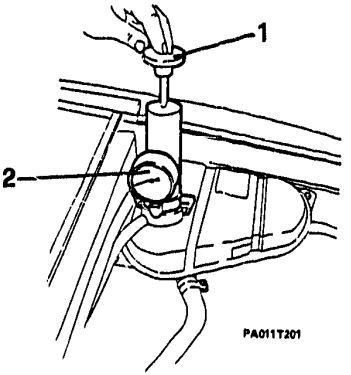

CIRCUIT TIGHTNESS CHECK (continued)

Pressurized cap tightness test

Pressurized cap setting pressure
100 ± 10 kPa (1,0 ± 0,1 bar; 1,0 ± 0,1 kg/cm²)

1. Screw the fitting on the test equipment and insert it on the expansion tank pressurized cap.
2. Apply pressure to the circuit and check on the test instrument that the blow off valve opens at the prescribed setting pressure.

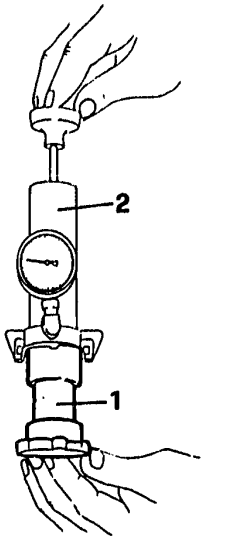

PA01ZT201

CIRCUIT FILLING

The antifreeze mixture is a product damaging the paint. Avoid any contact with painted parts.

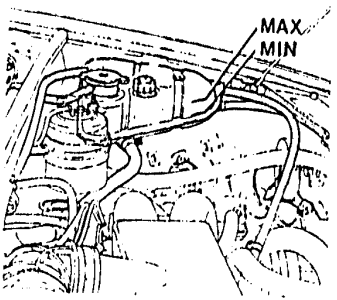

PB013T201

- After having previously drained the circuit, fill it with the quality and quantity of fluid as indicated in the table.
- Fill up the circuit till reaching the max. reference mark on the expansion tank.
- Start up the engine and let it reach its operating temperature, so that the thermostat opening bleeds all the air contained in the circuit.
- At cold engine, top up till reaching the level corresponding to the maximum reference mark on the expansion tank.
- Refit the expansion tank pressurized cap.

Minimum temperature		**-40°C**
Concentrated antifreeze	Alfa Romeo Antifreeze	4.3 litres (55%)
Distilled water		3.5 litres (45%)
Ready-for-use antifreeze	Alfa Romeo Climafluid Permanent -40°C	7.8 litres
	IP Antifreeze	
	AGIP Antifreeze Extra	

TECHNICAL CHARACTERISTICS AND SPECIFICATIONS

Cooling circuit

Check pressures KPa (bar; Kg/cm²)	- Pressurized cap setting - Circuit tightness	100 ± 10 (1,0 ± 0,1; 1,0 ± 0,1) 107,9 (1,08; 1,1)
Thermostatic valve	- Opening start temperature - Maximum opening temperature - Bulb travel	84 ÷ 88 °C 98 °C ≥7mm
Electric fan	- Intervention temperature - Switching off temperature	92 ± 2 °C 87 ± 2 °C

Coolant

Minimum temperature		- 40°C
Concentrated antifreeze	Alfa Romeo Antifreeze	4,3 litres (55%)
Distilled water		3,5 litres (45%)
Antifreeze ready for use	Alfa Romeo Climafluid Permanent -40°C	7,8 litres
	IP Antifreeze	
	AGIP Antifreeze Extra	

SEALANTS AND FIXING COMPOUNDS

APPLICATION	TYPE	DENOMINATION	Q.TY
Sealant for cooling circuit	Sealing powder	AREXONS	10 g

TIGHTENING TORQUES

Item \ Unit of measure	Nm	Kgm
Water temperature transmitter on supply manifold	33 ÷ 41	3.4 ÷ 4.2
Water pump fixing screws	19 ÷ 24	1.9 ÷ 2.4
Water pump pulley fixing	5 ÷ 10	0.5 ÷ 1
Electric fan enabling thermal contact	⩽ 50	⩽ 5
Thermostat fixing screws	19 ÷ 24	2 ÷ 2.5

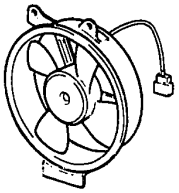

TURBODIESEL ENGINE

COOLING CIRCUIT

TECHNICAL CHARACTERISTICS AND SPECIFICATIONS

COOLING CIRCUIT

ASSY ..... 07 - 16
DESCRIPTION ..... 07 - 17
WATER PUMP ..... 07 - 19
Removal - Installation ..... 07 - 19
THERMOSTAT ..... 07 - 20
Removal - Installation ..... 07 - 20
Checks and inspections ..... 07 - 21
RADIATOR ..... 07 - 22
Assy ..... 07 - 22
Removal - Installation ..... 07 - 23
ELECTRIC FAN ENABLING THERMAL CONTACT ..... 07 - 25
Replacement ..... 07 - 25
CIRCUIT TIGHTNESS CHECK
Hydraulic circuit tightness test ..... 07 - 26
Pressurized cap tightness test ..... 07 - 27
CIRCUIT FILLING ..... 07 - 28

TECHNICAL CHARACTERISTICS AND SPECIFICATIONS

Cooling system ..... 07 - 29
Coolant ..... 07 - 29
FLUIDS AND LUBRICANTS ..... 07 - 30
SEALANTS AND FIXING COMPOUNDS ..... 07 - 30
TIGHTENING TORQUES ..... 07 - 30

COOLING CIRCUIT
ASSY

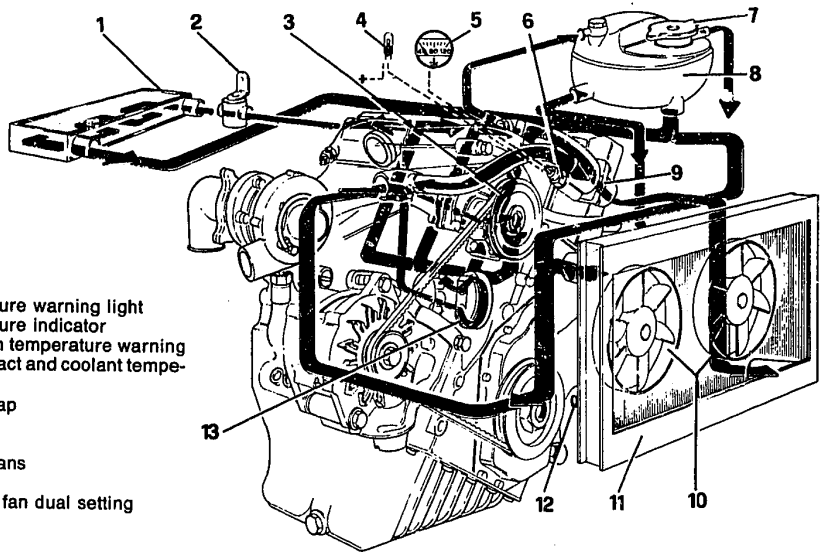

1 Heater
2 Heater cock
3 Pump
4 Coolant temperature warning light
5 Coolant temperature indicator
6 Coolant maximum temperature warning light thermal contact and coolant temperature indicator
7 Expansion tank cap
8 Expansion tank
9 Thermostat
10 Cooling electric fans
11 Radiator
12 Water/oil electric fan dual setting thermal contact
13 Heat exchanger

DESCRIPTION

The cooling circuit is of the sealed type with expansion tank and antifreeze.
The coolant circulation is ensured by a centrifugal pump belt-driven by the crankshaft pulley.
A thermostatic valve allows the engine to quickly reach its normal running temperature and to keep the optimal temperature values: the thermostat opens when the coolant has reached a temperature of 83 ± 2°C.

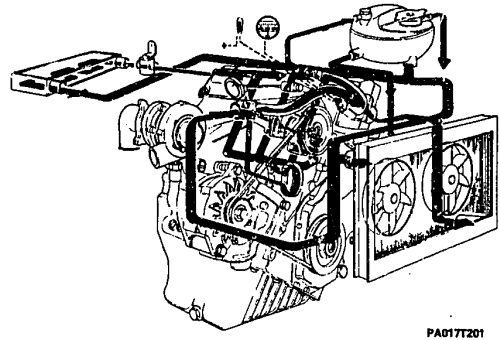

PA017T201

DESCRIPTION (continued)

In addition to the air ram effect, the radiator is also cooled by two electric fans controlled by a thermal switch, located on the radiator.
The thermal contact on the radiator has two different temperature settings.

- from **82 ± 2°C** to **76 ± 2°C** controls the two radiator electric fans with a "series-connected" power supply (reduced speed)
- From **88 ± 2°C** to **82 ± 2°C** controls the two radiator electric fans with a "parallel-connected" power supply (maximum speed).

The system is fitted with a coolant temperature sensor which supplies the max. temperature indicator and warning lamp, placed on the cluster. The warning lamp lights up whenever the coolant temperature exceeds **107 ± 3°C**.

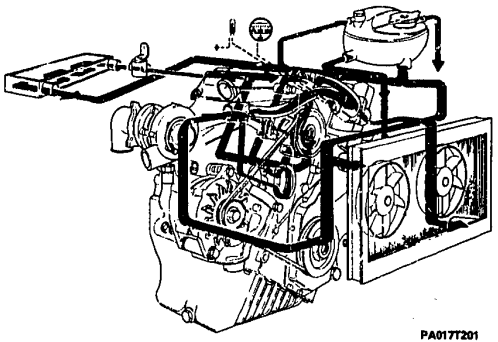

PA017T201

WATER PUMP

Removal - Installation

- Disconnect the battery negative cable.
- Drain the coolant from the cooling system.

1. Loosen the alternator fixing bolts.
2. Remove the alternator and water pump driving belt.
3. Disconnect the coolant-from-manifold pipe from the water pump.
4. Unscrew the four fixing screws and remove the pump with the relevant gasket.

- When refitting tension the water pump alternator drive belt (see **GR. 00**).

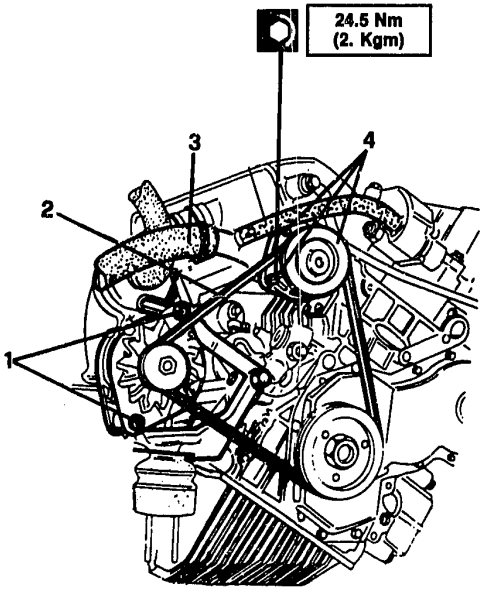

PA019T201

THERMOSTAT

Removal - Installation

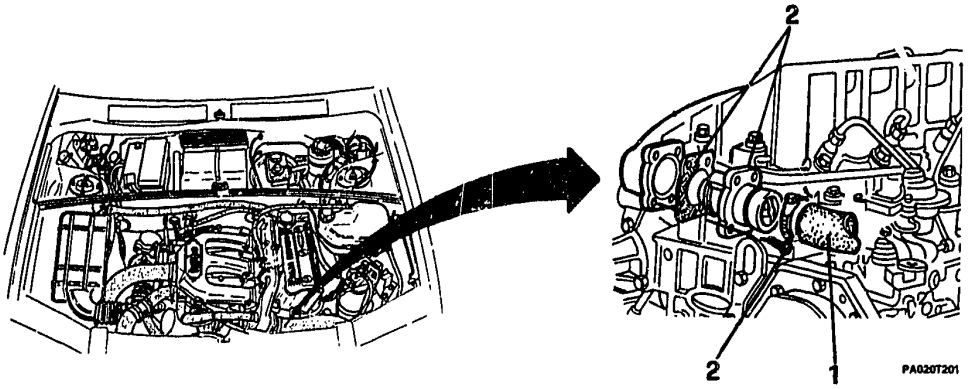

1. Disconnect the coolant-to-radiator sleeve from the thermostat and collect the coolant.
2. Unscrew the three screws fixing the thermostat to the manifold and remove the thermostat with its gasket.

THERMOSTAT (continued)
Checks and inspections

1. Install the thermostat on a special test equipment.
2. Fill the tank with water and turn on the test equipment to hest up the water.
- Check the thermostat setting.

Opening start	**81 ÷ 85°C**
Maximum opening	**95°C**
Bulb travel	**⩾ 9.5 mm**

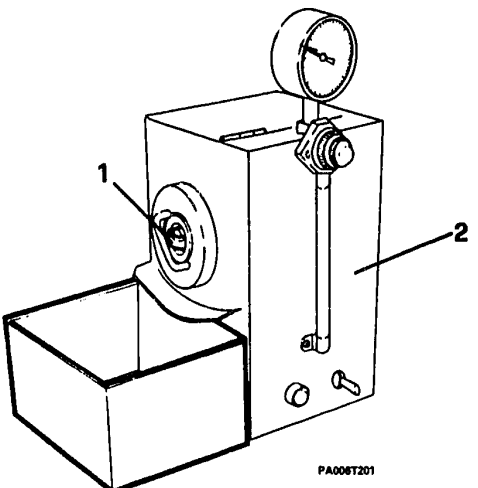

RADIATOR

Assy

1 Radiator
2 Radiator filling pipe
3 Coolant-to-pump delivery sleeve
4 Electric fan-to-radiator fixing screws
5 Electric fans
6 Electric fan supply cable connectors
7 Gasket
8 Radiator coolant inlet sleeve
9 Rubber pads
10 Electric fan control cable connector
11 Electric fan control thermal contact
12 Radiator-to-car body fixing screw
13 Bracket

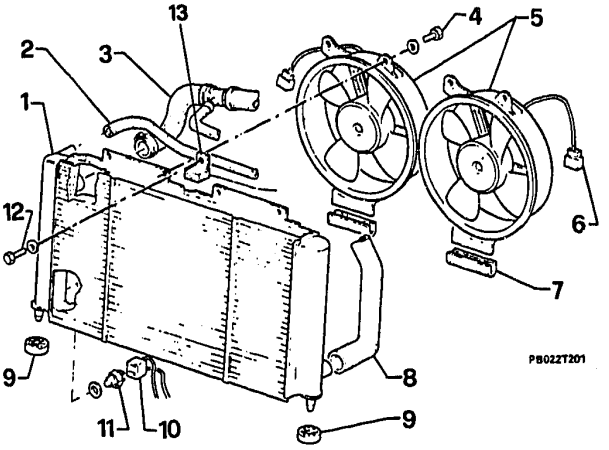

RADIATOR (continued)
Removal - Installation

- Remove the engine bonnet (see **GR. 56**).
- Remove the radiator cowling and the front bumpers (see **GR. 75**).
- Disconnect the battery negative cable.

1. Unplug the connector from the thermal contact
2. Unplug the connectors from the two electric fans.
3. Unscrew the radiator fixing screw and move the radiator onwards to gain access to the coolant pipes.

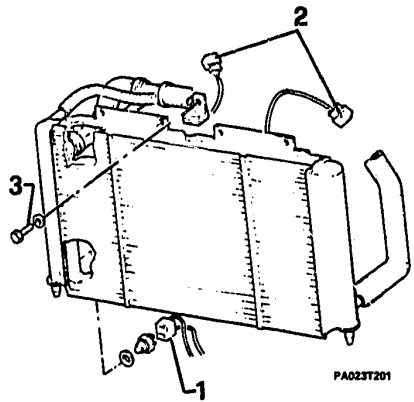

RADIATOR

Removal - Installation (continued)

1. Loosen the clamp, disconnect the coolant inlet sleeve from the radiator and drain the whole circuit.
2. Loosen the clamp and disconnect the filling pipe from the radiator.
3. Loosen the clamp and remove the coolant to-pump delivery sleeve from the radiator.
4. Remove the radiator complete with electric fans, keep apart the rubber pads of the lower anchoring points.
5. By operating at the bench, unscrew the electric fan fixing screws and remove the fans by withdrwing them from the gaskets.

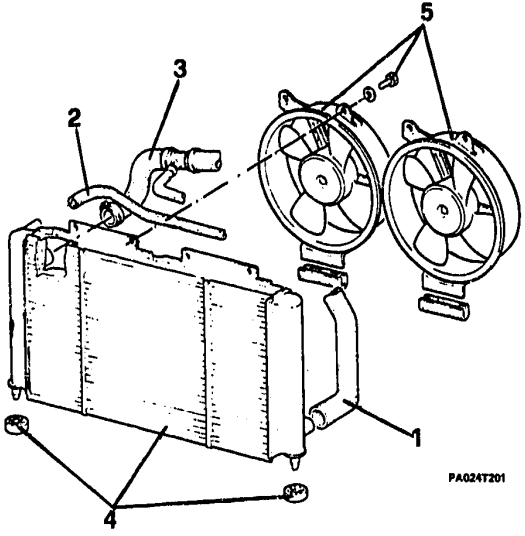

ELECTRIC FAN ENABLING THERMAL CONTACT

Replacement

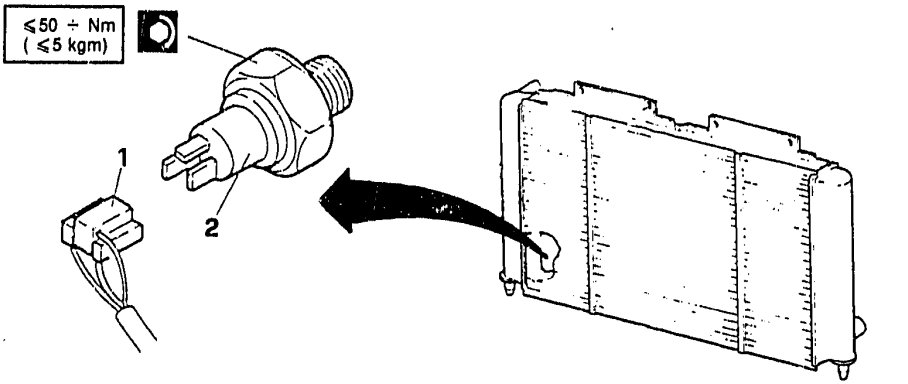

- Disconnect the battery negative cable.
- Completely drain the cooling circuit.

1. Unplug the electric connection.
2. Remove the thermal contact and check the setting. If correct values are not met, replace the thermal contact.

Intervention temperature with "series-connected" electric fans	**80 ÷ 84°C**
Intervention temperature with "parallel-connected" electric fans	**88 ÷ 90°C**

CIRCUIT TIGHTNESS CHECK

Hidraulic circuit tightness test

Hydraulic circuit check pressure
107.9 kPa (1.08 bar; 1.1 Kg/cm²)

- Unscrew the pressurized cap from the expansion tank.

1. Apply the hydraulic circuit test instrument to the expansion tank filler neck.
2. Apply pressure to the circuit and check on the test instrument that the pressure ranges within the prescribed values.

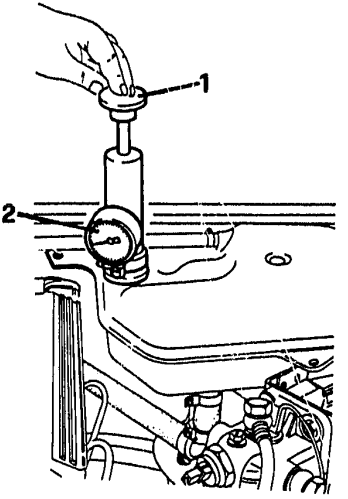

PA02UT201

CIRCUIT TIGHTNESS CHECK (continued)

Pressurized cap tightness test

Pressurized cap setting pressure
88.3 ÷ 107.9 kPa (0.88 ÷ 1.08 bar; 0.9 ÷ 1.1 Kg/cm²)

1. Fit the union on the test instrument and insert it on the expansion tank pressurized cap.
2. Apply pressure to the circuit and check on the test instrument that the blow off valve opens at the setting pressure.

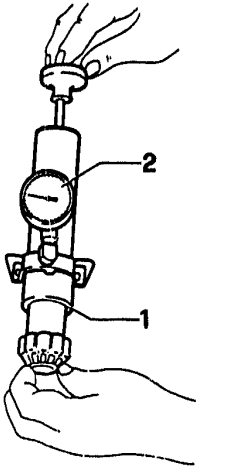

PA027T201

CIRCUIT FILLING

The antifreeze mixture is a product damaging the paint. Avoid any contact with painted parts.

- After having previously drained the circuit, fill it with the quantity and quality of fluid as indicated in the table.
- Fill the circuit till reaching the maximum reference mark on the expansion tank.
- Start up the engine and let it reach its operating temperature, so that the thermostat opening bleeds the air still contained in the circuit.
- At cold engine, top up till reaching the level corresponfding to the maximum reference mark on the expansion tank.
- Refit the pressurized cap on the expansion tank.

Minimum temperature		-40°C
Concentrated antifreeze	Alfa Romeo Antifreeze	4.8 litres (55%)
Distilled water		4.0 litres (45%)
Ready-for-use antifreeze	Alfa Romeo Climafluid Permanent -40°C	8.8 litres
	IP Antifreeze	
	AGIPAntifreeze Extra	

TECHNICAL CHARACTERISTICS AND SPECIFICATIONS

Cooling system

Check pressures KPa (bar; Kg/cm²)	- Pressurized cap setting	88.3 ÷ 107.9KPa (0.88 ÷ 1.08 bar; 0.9 ÷ 1.1 Kg/cm2)
	- Circuit tightness	107.9 (1.08; 1.1)
Thermostatic valve	- Opening start temperature	81 ÷ 85 °C
	- Maximum opening temperature	95 °C
	- Bulb travel	⩾9.5 mm
Electric fan	- Intervention temperature with "series-connected" electric fans	80 ÷ 84 °C
	- Intervention temperature with "parallel-connected" electric fans	86 ÷ 90 °C

Coolant

Minimum temperature		- 40°C
Concentrated antifreeze	Alfa Romeo Antifreeze	4,8 litres (55%)
Distilled water		4,0 litres (45%)
Antifreeze ready for use	Alfa Romeo Climafluid Permanent -40°C	8,8 litres
	IP Antifreeze	
	AGIP Antifreeze Extra	

FLUIDS AND LUBRICANTS

Application	Type	Denomination	Q.TY
Electric fan control thermal contact thread on radiator	ANTISEIZING	R.GORI: Never Seez	–

SEALANTS AND FIXING COMPOUNDS

Application	Type	Denomination	Q.TY
Sealant for cooling circuit	Sealing powder	AREXONS	10 g

TIGHTENING TORQUES

Item \ Unit of measure	Nm	Kgm
Coolant pump fixing screws in engine oil	24.5	2.5
Electric fan control thermal contact on radiator (with anti-seizing compound R. GORI: Never Seez)	20 ÷ 25	2 ÷ 2.5

MICROFICHE INDEX

Microfiche 9/15 Groups: 12-13-15-17



Group 12 - Clutch

CLUTCH ACTUATOR SYSTEM, HYDRAULIC SYSTEM SUBASSEMBLY.....12 - A
CLUTCH SUBASSEMBLY, TSN, SPECIAL TOOLS.....12 - B



Group 13 - Gearbox

GEARBOX, REMOVAL AND REPLACEMENT (for petrol models).....13 - C
REMOVAL AND REPLACEMENT (for turbodiesel models).....13 - D
RODS AND FORKS.....13 - E
SHAFTS AND GEARING.....13 - F
SHAFTS AND GEARING (continued), ADJUSTMENTS.....13 - G
EXTERNAL GEAR SELECTOR LINKAGE.....13 - H
ELECTROMAGNETIC COUPLING.....13 - I
ELECTROMAGNETIC COUPLING (continued), TSN.....13 - L
SPECIAL TOOLS.....13 - M



Group 15 - Transmission

PROPELLOR SHAFT, (For selectable 4x4), TSN, SPECIAL TOOLS.....15 - N



Group 17 - Differential and driveshafts

DIFFERENTIAL BEARINGS, DIFFERENTIAL CASING.....17 - O
DRIVE SHAFTS.....17 - P
REAR DIFFERENTIAL.....17 - Q
REAR DIFFERENTIAL (continued).....17 - R
HALF-SHAFTS.....17 - S
TSN, SPECIAL TOOLS.....17 - T

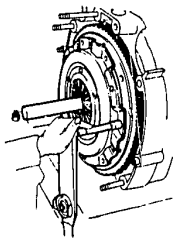

CLUTCH ACTUATOR SYSTEM

HYDRAULIC SYSTEM SUBASSEMBLY

CLUTCH ACTUATOR SYSTEM

COMPLETE SYSTEM ..... 12 - 1
DESCRIPTION ..... 12 - 2

HYDRAULIC SYSTEM SUBASSEMBLY

CLUTCH PEDAL ..... 12 - 3
Removal and replacement ..... 12 - 3
CLUTCH MASTER CYLINDER ..... 12 - 4
Removal and replacement ..... 12 - 4
Disassembly and reassembly ..... 12 - 5
Inspection and checking ..... 12 - 6
CLUTCH SLAVE CYLINDER ..... 12 - 7
Removal and replacement ..... 12 - 7
Disassembly and reassembly, Inspection and checking ..... 12 - 8
CLUTCH SLAVE CYLINDER (Specific for TURBODIESEL version) ..... 12 - 9
Removal and replacement ..... 12 - 9
Disassembly and reassembly, Inspection and checking ..... 12 - 10
HYDRAULIC PIPING SYSTEM ..... 12 - 11

CLUTCH ACTUATOR SYSTEM

COMPLETE SYSTEM

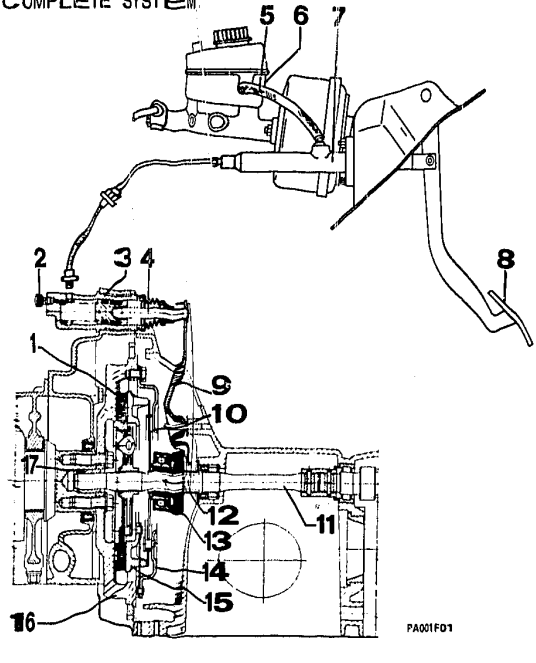

1 Clutch driven plate
2 Bleed screw
3 Clutch slave cylinder
4 Actuator plunger
5 Flexible hose
6 Hydraulic fluid reservoir
7 Clutch master cylinder
8 Clutch pedal
9 Clutch release fork
10 Clutch spring
11 Clutch driven shaft
12 Thrust bearing support
13 Self-centering thrust bearing
14 Clutch spring cover
15 Pressure plate
16 Flywheel
17 Crankshaft nose bush

CLUTCH ACTUATOR SYSTEM (continued)

DESCRIPTION

- The clutch unit is of the single dry plate type, with hydraulic actuation and thrust bearing in constant contact with the pressure plate. Pressure on the driven plate is provided by a diaphragm spring.
- Clutch release is achieved through a hydraulic system where foot pressure is transmitted via a master cylinder to the piston in a slave cylinder.
- This piston operates the clutch release lever fork, pushing the self-centering thrust bearing and countering the pressure of the diaphragm spring.
- The hydraulic system eliminates any play and allows disk wear to be automatically compensated.

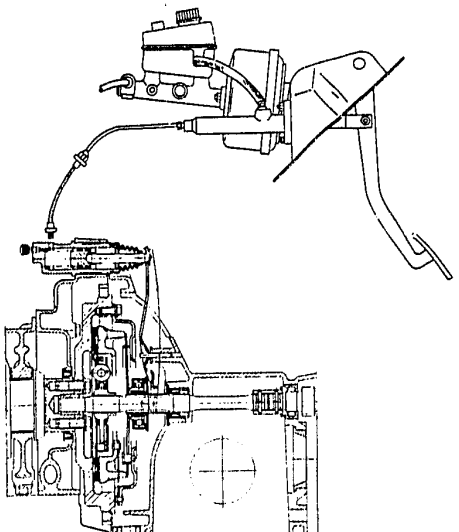

PB002F101

HYDRAULIC SYSTEM SUBASSEMBLY

CLUTCH PEDAL

Removal and replacement

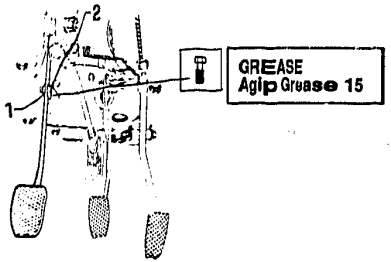

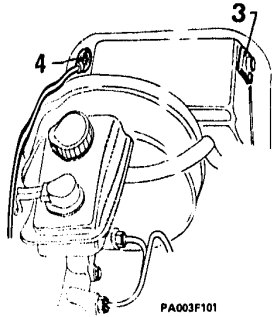

1. Working from the passenger compartment, remove the retainingcirclip
2. Withdraw the pin, disconnecting the pedal from the master cylinder yoke and return spring.
3. Working from the engine bay remove the pedal pin stop spring and relative washer.
4. Unscrew the accelerator cable bracket so that the pedal pin can be sufficiently withdrawn to allow removal of the clutch pedal from the passenger compartment.

- Extract the two plastic bushes from the pedal.

CLUTCH MASTER CYLINDER

Removal and replacement

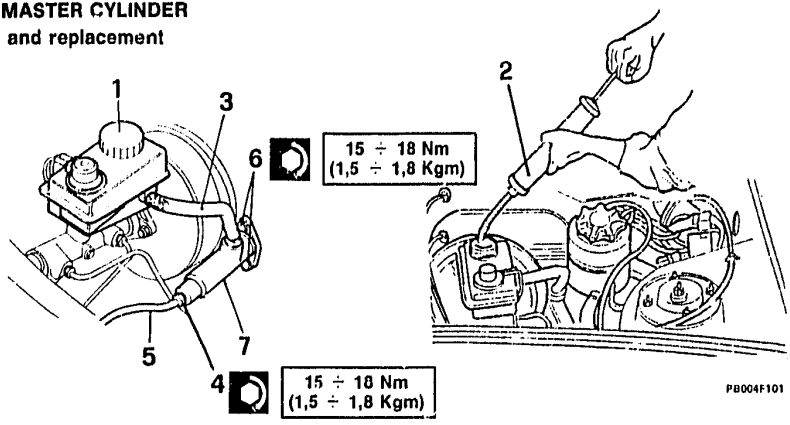

1. Remove the hydraulic fluid reservoir cap, gasket and filter.
2. Using a syringe, suck up the fluid so that the level falls below the master cylinder feed hose.
3. Remove the feed hose from the master cylinder.
4. Slacken the pipe union.
5. Disconnect the hydraulic pipe from the cylinder.
   - Working fro inside the vehicle, remove the retaining circlip, extract the pin and disconnect the cylinder yoke from the clutch pedal
6. Unscrew the bolts holding the master cylinde to the pedal bracket.
7. Remove the master cylinder.

CLUTCH MASTER CYLINDER (continued)

Disassembly and reassembly

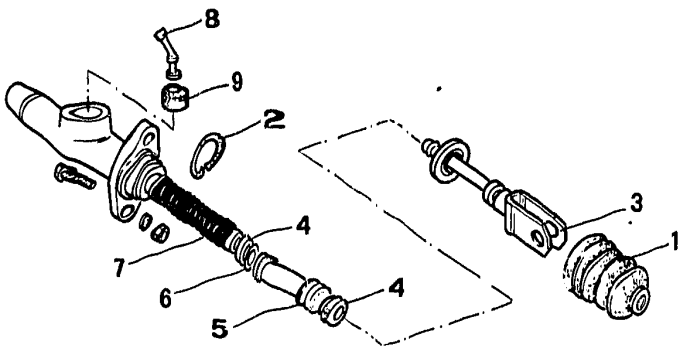

1. Withdraw the protective bellows.
2. Remove the retaining circlip.
3. Extract the actuator rod and yoke.
4. Remove the seals.
5. Extract the piston.
6. Remove the washer.
7. Remove the spring.
8. Extract the hose connector.
9. Extract the seal.

CLUTCH MASTER CYLINDER (continued)
Inspection and checking

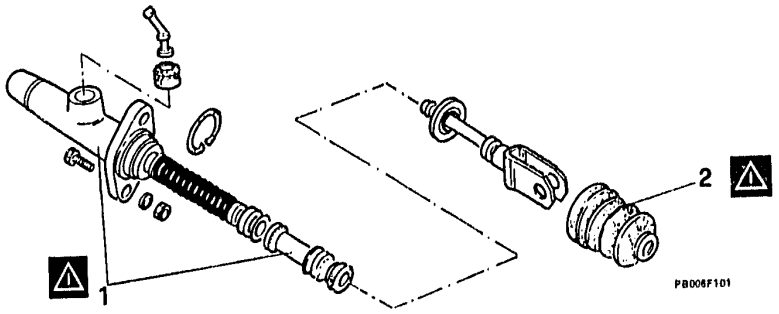

Use only the specified hydraulic fluid to clean master cylinder components. Do not use petrol, paraffin or other mineral solvents, which will damage the parts in rubber.

Inspect the inside of the cylinder and the piston for traces of rust or ridges. If present, replace the parts.

1. Check the cylinder and piton for wear. If there is excessive play, replace the piston or the complete cylinder assembly.
2. Check the condition of the sealing bellows and if damaged replace them.

- Inspect all chambers, openings and internal passages and ensure that they are clean and free of foreign bodies.

CLUTCH SLAVE CYLINDER

Removal and replacement

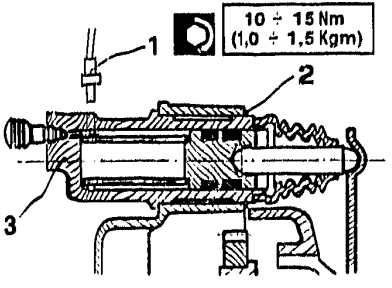

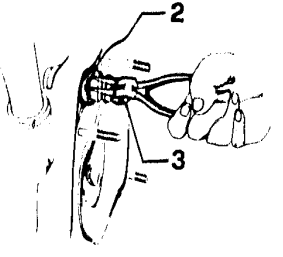

A0080101

1. Disconnect the hydraulic pipe to the cylinder.
2. Remove the circlip retaining the slave cylinder in its housing in the rear engine cover.
3. Extract the slave cylinder.

CLUTCH SLAVE CYLINDER (continued)

Disassembly and reassembly, inspection and checking

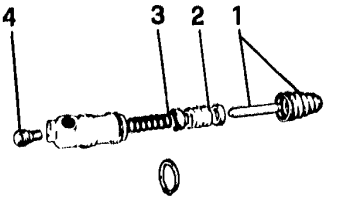

PA010F101

1. Extract the actuator rod from the slave cylinder complete with rubber bellows.
2. Remove the piston.
3. Remove the spring.
4. Remove the bleed screw.

Wash all slave cylinder components using only hydraulic fluid as prescribed.
Under no circumstances use petrol, paraffin or other mineral solvents, which will damage the rubber components in the hydraulic system.

Inspect the dismantled components and substitute those which are worn or damaged.

- Ensure that there are no traces of rust or ridges on the piston or cylinder bore.
- Check cylinder wear, spring efficiency and the condition of the seals.
- Make sure the bleed passage is free of foreign bodies.

CLUTCH SLAVE CYLINDER (Specific for TURBODIESEL version) Removal and replacement

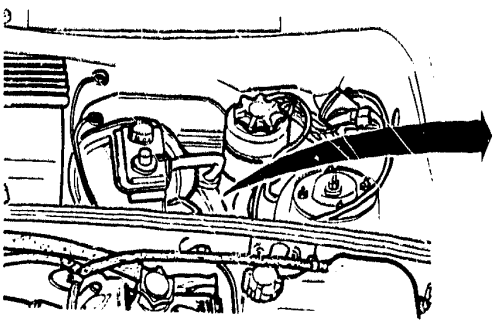

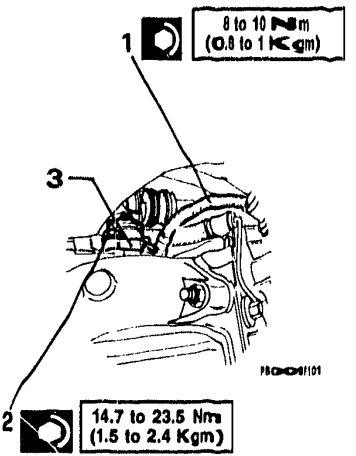

1. Unscrew clutch master cylinder pipe union; then lift pipe clear of engine service bay.
2. Unscrew two screws fastening clutch slave cylinder.
3. Remove slave cylinder from engine rear cover together with the previously disconnected pipe.

When replacing, bleed hydraulic clutch system

CLUTCH SLAVE CYLINDER
(Specific for TURBODIESEL version) (continued)
Disassembly and reassembly, inspection and checking

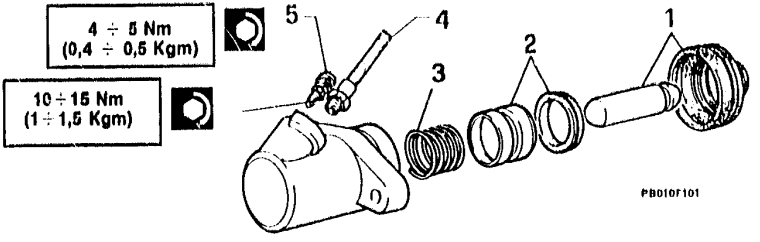

1. Withdraw the actuator rod with bellows from the slave cylinder body.
2. Remove the piston ad seal.
3. Remove the spring.
4. Unscrew the pipe union connector from the cylinder.
5. Unscrew the bleed screw.

Wash all slave cylinder components using only specified hydraulic fluid.
Under no circumstances use petrol, paraffin or other mineral solevents which will damage the rubber components of the hydraulic system.

Inspect the dismantled components and substitute those which are worn or damaged.

- Make sure there are no traces of rust or ridges on the cylinder bore or piston.
- Check cylinder wear, spring efficiency and the condition of the piston seal.
- Make sure that the bleed passage is free from foreign bodies.

HYDRAULIC PIPING SYSTEM

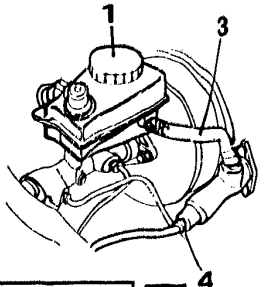

15 to 18 Nm
(1.5 to 1.8 Kgm)

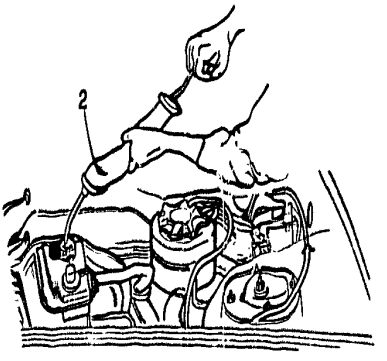

PS011P101

1. Remove filler cap on hydraulic fluid reservoir together with gasket and filter.
2. Using a syringe, suck up the fluid until the level drops below the master cylinder feed hose union.
3. Remove hose connecting reservoir and master cylinder of clutch.
4. Slacken unions of pipes and hoses connecting master and slave cylinders and remove pipes.

Visually check condition of hydraulic pipes and hoses. Replace any damaged parts. If unions leak, owing to slackening, retighten and, if necessary replace damaged components.

- Refit pipes to the vehicle, reversing removal procedure; top up reservoir to correct level.

Bleed off the hydraulic system

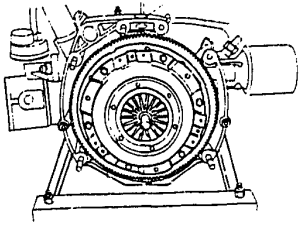

CLUTCH SUBASSEMBLY

TECHNICAL SPECIFICATIONS AND NOTES

SPECIAL TOOLS

CLUTCH SUBASSEMBLY

CLUTCH PLATE AND COVER ..... 12 - 12
Removal ..... 12 - 12
Inspection and checking ..... 12 - 13
Replacement ..... 12 - 15
THRUST BEARING ..... 12 - 16
Disassembly and reassembly ..... 12 - 16
Inspection and checking ..... 12 - 17
REPLACING CLUTCH FLUID ..... 12 - 18
BLEEDING THE CLUTCH SYSTEM ..... 12 - 19
CHECKING THE CLUTCH SYSTEM ..... 12 - 20

TSN

FLUIDS AND LUBRICANTS ..... 12 - 21
CHECKS AND ADJUSTMENTS ..... 12 - 22
Flywheel and clutch cover ..... 12 - 22
Clutch driven plate ..... 12 - 22
TIGHTENING TORQUES ..... 12 - 23
SPECIAL TOOLS ..... 12 - 24

CLUTCH SUBASSEMBLY

CLUTCH PLATE AND COVER

Removal

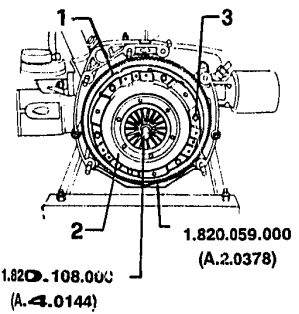

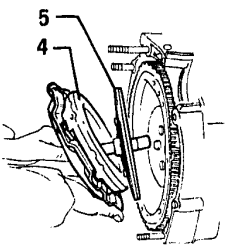

- Remove the gearbox-differential unit from the vehicle (see UN. 13).

1. Using tool No. 1.820.059.000 (A.2.0378) (No. 1.820.078.000 - A.2.0448 for the 1.8 TD INTERCOOLER version) lock the flywheel.
2. Insert tool No. 1.820.108.000 (A.4.0144) in the clutch driven plate hub.
3. Working across the diameters, slacken the clutch cover mounting bolts and unscrew them from the flywheel.
4. Remove the clutch cover.
5. Remove the clutch driven plate.

Inspection and checking

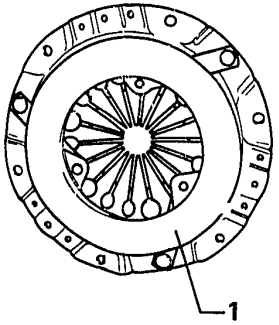

PA015F101

- Clean all the dismantled parts except for the clutch driven plate with a suitable solvent, in order to eliminate every trace of grease, before inspection and checking.

1. Inspect the pressure plate for signs of overheating, irregular wear, cuts or pitting. If necessary substitute the clutch cover assembly.

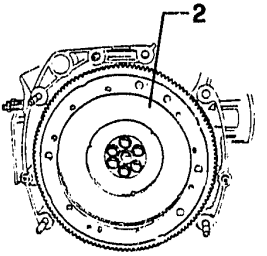

PA015F102

Maximum machining allowance on surfaces
0,2 mm
1 mm (per vetture 1.8 TD INTERCOOLER)

2. Inspect the flywheel friction surface for signs of overheatingm irregular wear, cuts or pitting. If necessary remove the flywheel and skim the bearing surface and the cover seating surface.

Inspection and checking (continued)

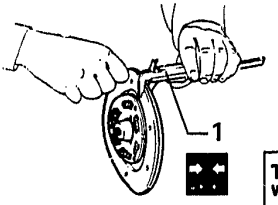

Thickness of the plate when almost entirely worn
6.5 mm

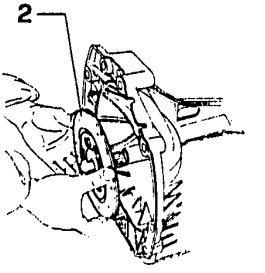

- Check that the gaskets of the clutch plate are not burnt or greasy, that the rivets securing the gaskets are perfectly sound and that the torsion springs are undamaged.
- If anomalies are detected due to fluid leaks from the seal ring on the power take-off shaft or crankshaft, replace both the clutch plate and the seal rings.

1. Using a gauge, check that the gaskets are evenly worn and that the thickness of the cluch plate is not reaching the limit of wear. If necessary replace the plate.
2. Check that the clutch plate hub is not damaged and that it runs freely, without excessive play, along the coupling of the power take-off shaft. If necessary replace the clutch plate.

Replacement

- If the crankshaft and gearbox input shaft oil seals were extracted during dismantling, fit two new oil seals

- Make sure that the clutch driven plate, flywheel and pressure plate working surfaces are completely clean and dry.
- If the flywheel was also removed when dismantling the clutch assembly, proceed with refitting it (see UN. 01).
- Position the clutch driven plate and cover on the flywheel.

1. Centre the clutch driven plate using tool No. 1.820.108.000 (A.4.0144).
2. Screw the clutch cover bolts into the flywheel, and tighten them to the specified torques working diagonally.

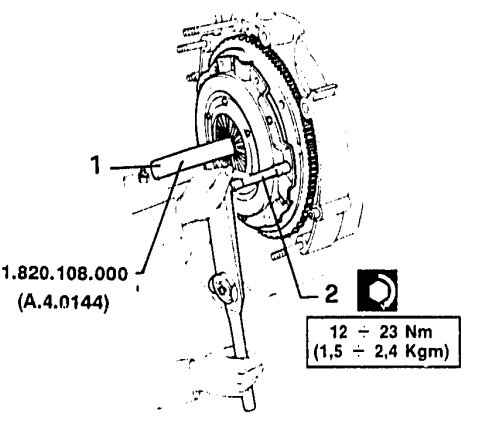

- Remove the flywheel locking tool.
- If the slave cylinder was dismantled, refit it, positioning the actuator rod in contact with the release fork.
- Refit the gearbox-differential unit to the vehicle (see UN. 13).

THRUST BEARING

Disassembly and reassembly

- Separate the gearbox-differential unit from the engine (see UN. 01).

1. Remove the thrust bearing from the support on the gearbox-differential unit.
2. Remove the clutch release fork from the housing.

- When re-assembling, lubricate the thrust bearing seat with the recommended grease.

AGIP F1 Grease 33 FD
IP AutoGrease FD
ISECO Molykote BR2

Do not apply an excessive amount of grease, since this could come into contact with the clutch surfaces and damage them.

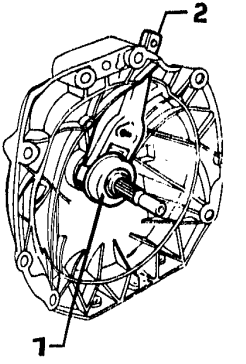

PA018F101

Inspection and checking

1. Make sure that the self-centering thrust bearing allows side shift with repect to the outer casing, when subject to slight radial movements.
- Inspect the running surface between bearing and support on gearbox input shaft for signs of tight running. If necessary substitute the worn parts.
2. Ensure that the clutch release fork is not cracked, distorted or excessively worn in the working area. If necessary, substitute it.

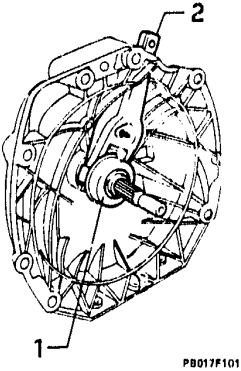

PB017F101

REPLACING CLUTCH FLUID

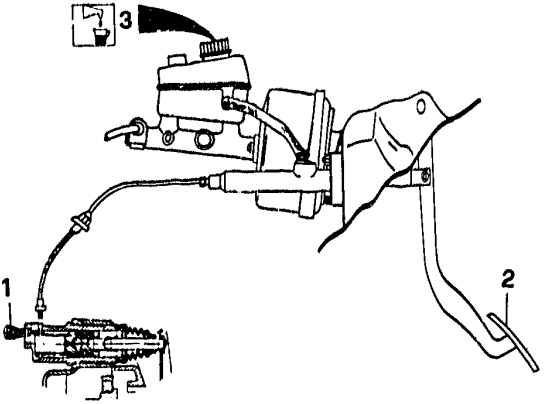

1. Connect a hose to the drain screw of the clutch cylinder.
2. Drain off the hydraulic fluid from the clutch system by working the clutch pedal.
3. Refill the system with the specified oil (see TSN) and bleed the air.

⚠

Use the specified fluids from the sealed tins only.
Do not re-use old fluid.
Be careful not to spill liquid on to metal parts as the fluid is corrosive.
If the clutch pedal travel is long and spongy air is present which must be bled from the system.

BLEEDING THE CLUTCH SYSTEM

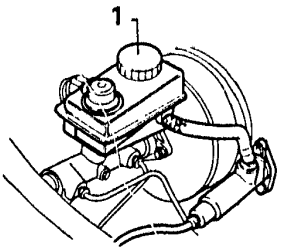

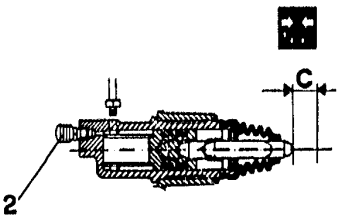

Travel "C" of the clutch cylinder rod 16 - 18 mm
This distance cannot be altered and depends on the volume of fluid moved by the piston of the clutch pump

1. Remove the cap and if necessary top up with the specified fluid.
2. Remove the cover protecting the drain screw on the cylinder, push a rubber hose onto it and submerge one end in a transparent container filled with the same fluid as used in the system.
- Simultaneously loosen the drain screw and fully depress the clutch pedal allowing it to rise slowly. Repeat the operation until all the air has been bled from the system.
- With the pedal fully depressed, close the drain screw, remove the hose and install the protective hood.
- Refill the reservoir with fluid and replace the cap.
- Check that the clutch disengages and that the gears engage correctly. If necessary check that the cylinder pushrod maintains the specified length of travel.
- Check that the hydraulic system is working correctly if the specified value of the cord is not "c".

Do not use the fluid drained off during the bleeding operation.
When bleeding the fluid in the reservoir must always be above the "MIN" mark.

CHECKING THE CLUTCH SYSTEM

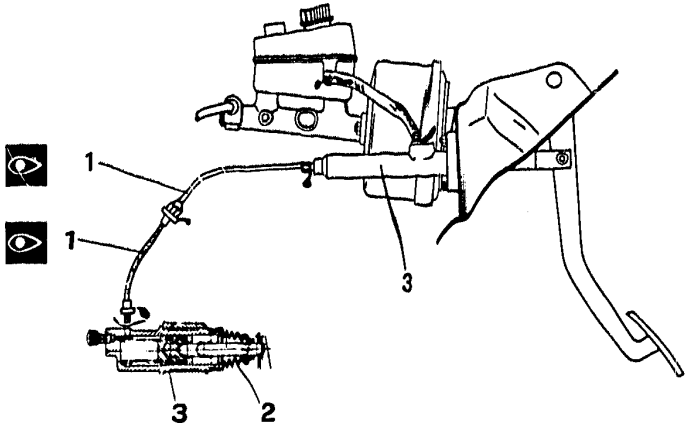

1. Check that the pipes and hoses are not damaged or oxidized and that they are attached correctly.
2. Check the connections of the system for leaks. If necessary tighten the connections to the correct torque.
2. Check that the protective boots of the pump and clutch cylinder are not damaged.
3. Check that the pump and clutch cylinder are not leaking and if necessary overhaul the components.

TECHNICAL SPECIFICATIONS AND NOTES

FLUIDS AND LUBRICANTS

Application	Type	Product
Thrust bearing seat	GREASE	– AGIP F1 GREASE 33 FD – IP Autogrease FD – ISECO Molykote BR2
Crankshaft nose bush	GREASE	– ISECO Molykote Pasta G
Clutch pedal - master cylinder yoke pin. Clutch pedal bush	GREASE	– AGIP F1 Grease 15
Clutch hydraulic circuit refill	FLUID	– AGIP Brake Fluid DOT4 – IP Auto Fluid FR DOT4 – Alfa Romeo Brake Fluid SUPER DOT4

CHECKS AND ADJUSTMENTS

Flywheel and clutch cover

Maximum skimming allowance on working surfaces	0,2 mm	1 mm '

' For 1.8 TD Intercooler version

Clutch driven plate

Plate thickness with maximum wear	6,5 mm

TIGHTENING TORQUES

Item \ Unit of measurement	N.m	kg.m
Screws securing clutch master cylinder to pedal mounting	15 to 18	1.5 to 1.8
Clutch circuit pipe union on master cylinder	15 to 18	1.5 to 1.8
Clutch circuit pipe union on slave cylinder	10 to 15	1.0 to 1.5
Screws securing clutch actuator slave cylinder (*)	14.7 to 23.5	1.5 to 2.4
Clutch circuit pipe union on clutch master cylinder (*)	8to÷ 10	0.8 to 1
Clutch circuit bleed screw (*)	4 to 5	0.4 to 0.5
Screws securing clutch cover to flywheel	15 to 23	1.5 to 2.4
Nuts and bolts securing gearbox - differential casing to engine rear cover	39.2 to 48	4 to 4.9

(*) Specific for TURBODIESEL version

SPECIAL TOOLS

1.820.059.000 (A.2.0378)	Flywheel locking tool	 PA023F101
1.820.108.000 (A.4.0144)	Clutch driven plate centering mandrel	 PA023F102
1.820.078.000 * (A.2.0448)	Flywheel locking tool	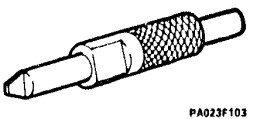 PA023F103

* For 1.8 TD intercooler version

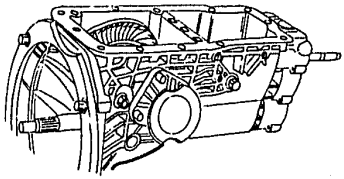

GEARBOX

REMOVAL AND REPLACEMENT (For petrol models)

GEARBOX

ASSEMBLY.....13 - 1
DESCRIPTION.....13 - 6

REMOVAL AND REPLACEMENT (For petrol models)

PRELIMINARY OPERATIONS ON ENGINE COMPARTMENT.....13 - 7
UNDERBODY COMPONENTS.....13 - 9
Drive shaft.....13 - 11
Gearbox-differential unit.....13 - 14

GEARBOX

ASSEMBLY

1. Pin
2. Gearbox-differential casing
3. Elastic bush
4. Central mounting
5. Oil filler plug
6. Speedometer drive
7. Retension spring
8. Dowel
9. Rear cover
10. Valve
11. Plug
12. Stop plate
13. Pivot
14. Grommet
15. Rear support bracket
16. Spacer
17. Elastic joint
18. Gear lever
19. Gear selector rod
20. Bush
21. Seal
22. Bracket

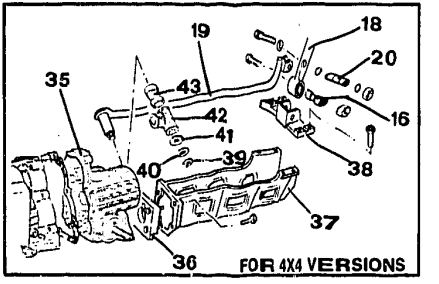

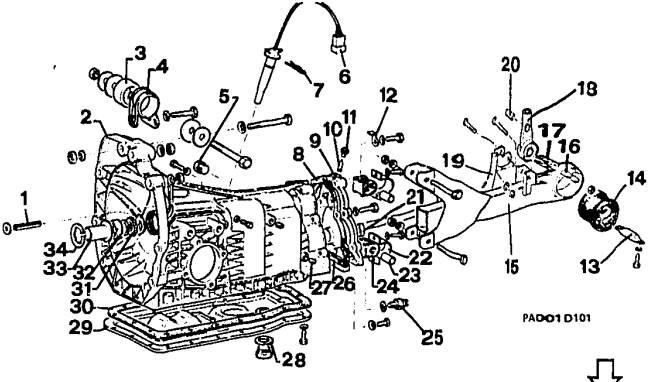

GEARBOX

ASSEMBLY (continued)

23. Bush
24. Rubber block
25. Reverse gear switch
26. Gasket
27. Plug
28. Oil drain plug
29. Oil sump
30. Oil sump gasket
31. Bush
32. Seal ring
33. Mounting
34. Circlip
35. Electromagnetic coupling
36. Flexible mounting
37. Cradle
38. Bracket
39. Circlip
40. Washer
41. Rubber washer
42. Flexible joint
43. Anti-vibration rubber mounting

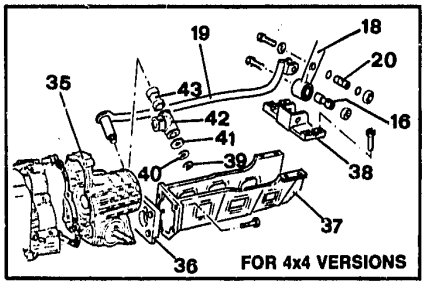

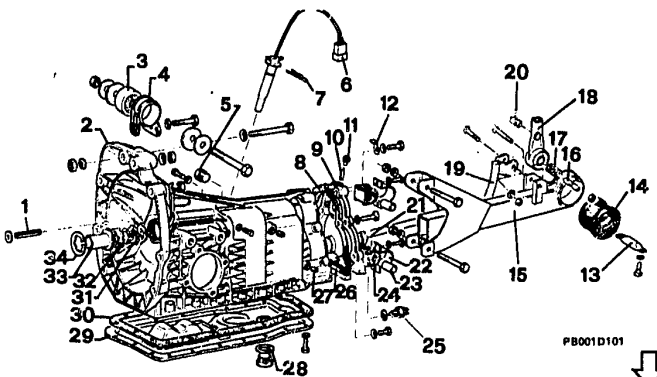

ASSEMBLY (continued)

1. Control shaft
2. Springs
3. Bush
4. Pins
5. Needle bearing
6. Reverse gear shaft
7. Reverse gear pinion
8. Primary shaft
9. Woodruff keys
10. Bearing
11. Circlip
12. 5th gear pinion
13. Cup
14. Reverse gear pinion
15. Bush
16. 1st gear pinion
17. Keep ring
18. Synchro segment
19. Keep segment
20. Synchro rings
21. Circlip

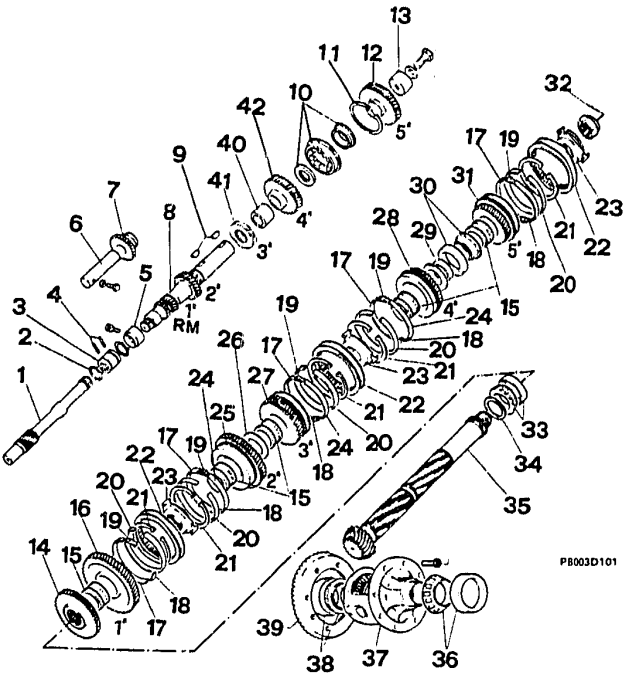

ASSEMBLY (continued)

22. Synchro unit retaining ring
23. Synchro hub
24. Keep ring
25. 2nd gear pinion
26. Shoulder washer
27. 3rd gear pinion
28. 4th gear pinion
29. Shim
30. Bearing
31. 5th gear pinion
32. Retaining nut
33. Bearing
34. Shim
35. Pinion shaft
36. Differential bearing
37. Differential cage
38. Differential bearing
39. Bevel crown wheel
40. Spacer
41. 3rd gear pinion
42. 4th gear pinion

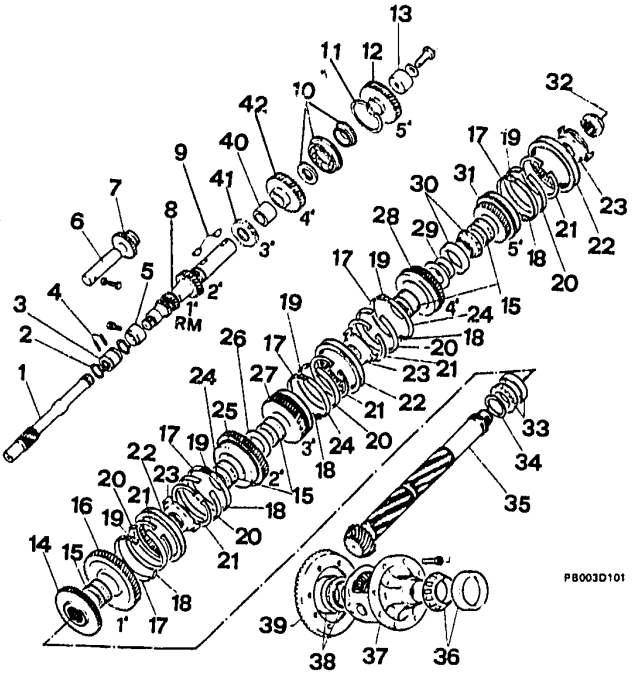

ASSEMBLY (continued)

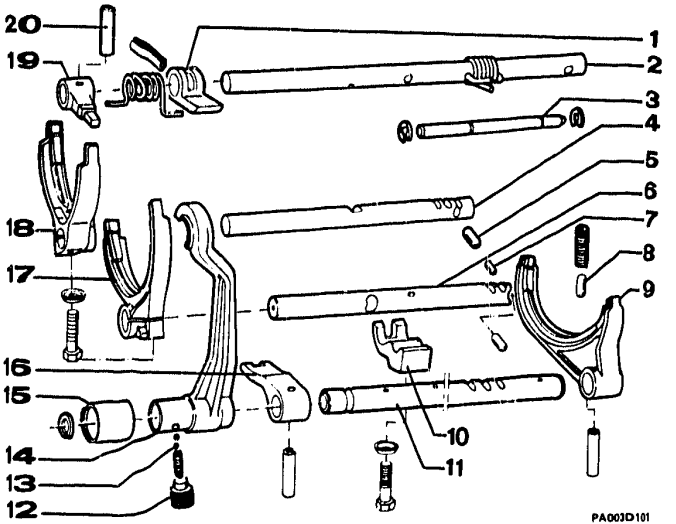

1. Lever
2. Selector rod
3. Rod
4. 3rd and 4th gear selector rod
5. Lock slug
6. 1st and 2nd gear selector rod
7. Central slug
8. Safety slug
9. 5th gear yoke
10. 1st and 2nd gear lever
11. 5th and reverse gear selector rod
12. Plug
13. Balls
14. Reverse gear yoke
15. Bush
16. Reverse gear lever
17. 1st and 2nd gear selector rod
18. 3rd and 4th gear yoke
19. Selector lever
20. Roll pin

DESCRIPTION

The gearbox features 5 forward ratios and one reverse ratio. Gear selection is via synchromesh for all ratios except reverse. All gears are of the constant-mesh helicoidal type except reverse, which has straight-cut gears. The gearchange is of the joystick type, with selector rod lever and gear engagement via control shaft.
The rear gear-lever support bracket is attached to the gearbox with a pair of flexible mountings that minimise vibration transmission to the gear-lever.
The differential unit forms a single block with the gearbox. Torque is of the hypoid type.

REMOVAL AND REPLACEMENT (For petrol models)

PRELIMINARY OPERATIONS ON ENGINE COMPARTMENT

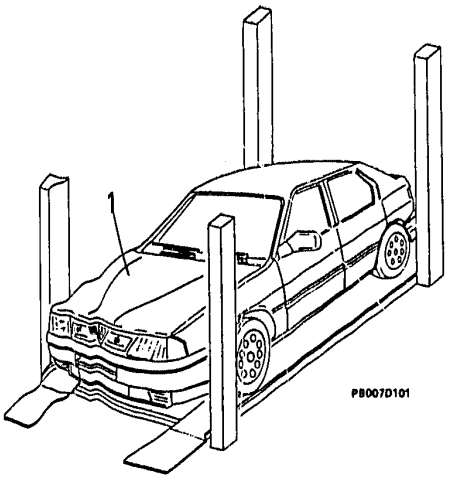

1. Set vehicle on lift.
   - Disconnect negative battery terminal.

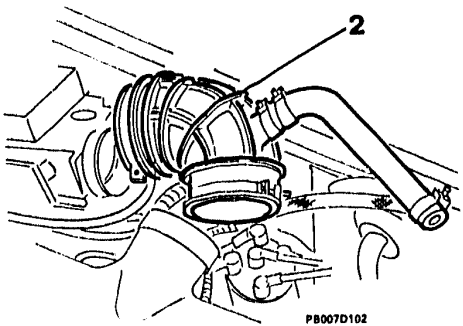

   - Working from the passenger compartment, remove gear lever knob and rubber jacket.
2. Remove corrugated sleeve.

⇩

REMOVAL AND REPLACEMENT(For petrol models)

PRELIMINARY OPERATIONS ON ENGINE COMPARTMENT (continued)

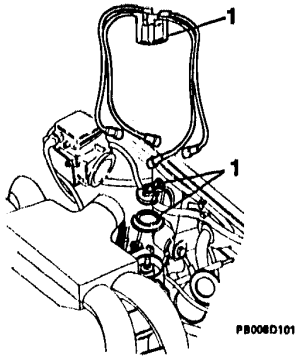

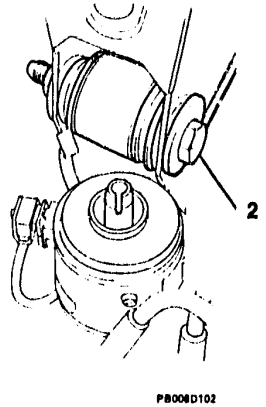

1. Remove distributor cap together with leads and rotor.
- Unscrew and remove two bolts securing starting motor to engine - power train unit, without disconnecting energizing and supply leads; pull back starting motor and place it on engine block.

2. Slacken bolt of central engine flexible mounting.

REMOVAL AND REPLACEMENT (For petrol models) (continued)

UNDERBODY COMPONENTS

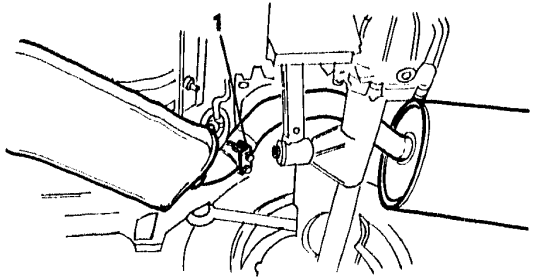

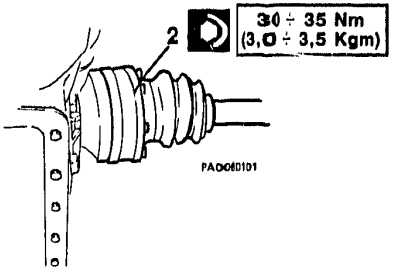

- Raise the vehicle.

1. Disconnect the exhaust pipe from the tail section.
2. Remove the drive shaft bolts and free the drive shafts from the transmission unit.

UNDERBODY COMPONENTS (continued)

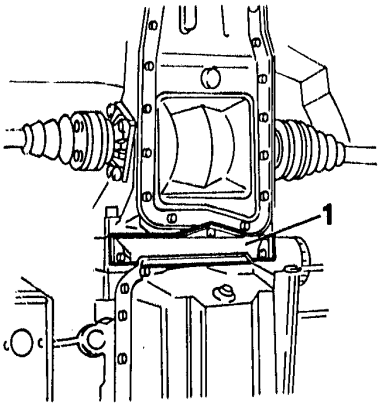

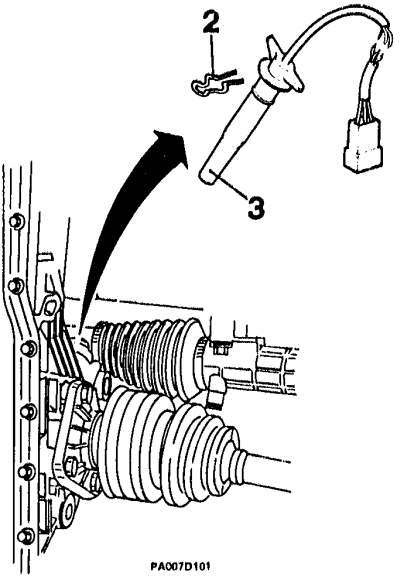

1. Remove the flywheel inspection cover.
2. Remove the speedometer drive shaft retaining clip.
3. Withdraw the speedometer drive shaft.

UNDERBODY COMPONENTS (continued)

Drive shaft

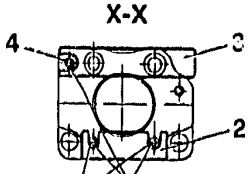

11 ÷ 14 Nm

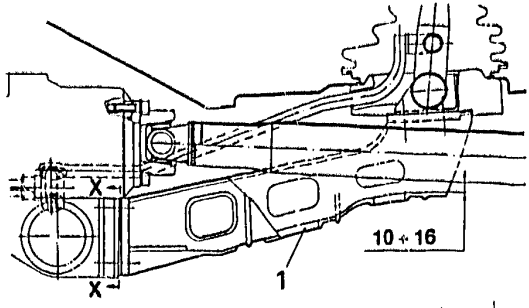

1. Remove the gear lever support (for 4x4 versions).
- When refitting the gear control lever it is necessary to check that it is the correct distance away from the drive shaft.

If set is not it is possible to operate as follows:
- Raise the vehicle.
- Check the distance between the support and the drive shaft.
- If the values is above 16 mm it will be necessary to insert one or more shims (2) under the lower nuts.
- If the value is below 10 mm it will be necessary to insert one or more shims (3) under the upper nut.
- Tighten the nuts (4) to the correct torque.

NOTE. Each 0.5 mm shim will vary the value by ~ 3.5 mm.

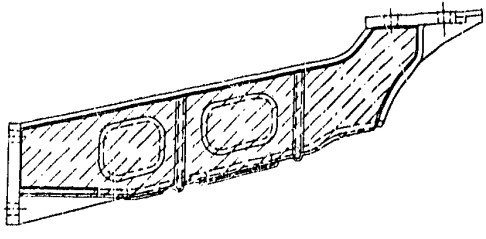

NOTE: Starting from chassis number 5822286, an off-loaded gear lever support has been fitted and the distance from the drive shaft need not be checked.

UNDERBODY COMPONENTS

Drive shaft (continued)

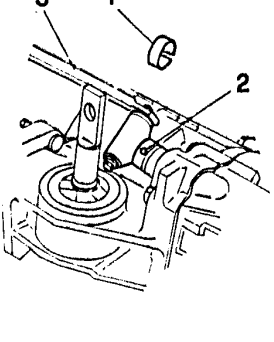

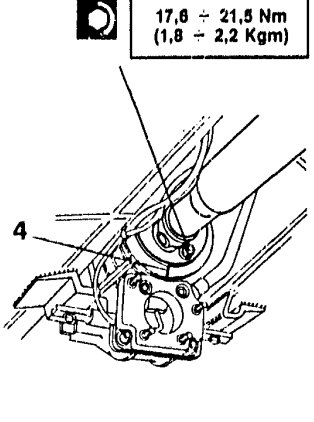

1. Remove the retaining clip.
2. Remove the mounting bar.
3. Remove the gear selector link.
4. Scratch a reference mark on the front propellor shaft flange, to ensure correct positioning during replacement.

⇩

UNDERBODY COMPONENTS

Drive shaft (continued)

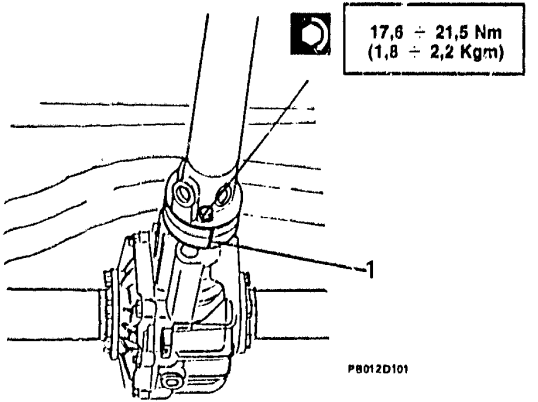

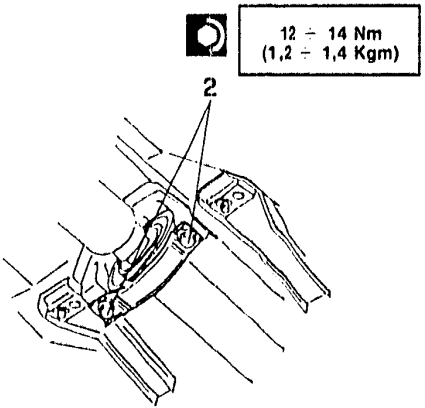

1. Scratch a reference mark on the rear propellor shaft flange to ensure correct positioning during replacement.

2. Remove the central support bolts.
- Unscrew the 4 union bolts from each of the front and rear flanges, and remove the propellor shaft.

UNDERBODY COMPONENTS (continued)

Gearbox - differential unit

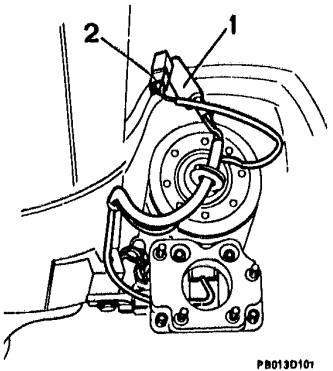

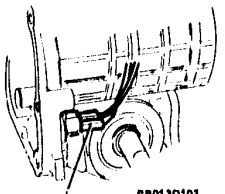

4x2

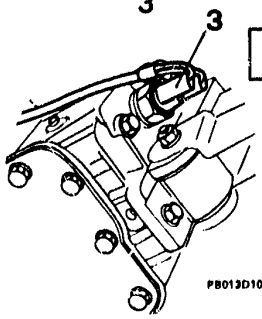

4x4

5 18,6 ÷ 23,5 Nm (1,9 ÷ 2,4 kgm)

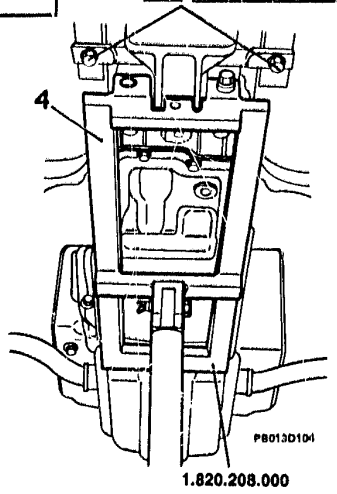

1. Disconnect antiseizing sensor leads.
2. Disconnect electromagnetic coupling wiring.

The following procedures apply to both 4x2 and 4x4 versions.

3. Disconnect reverse gear switch wiring.
4. Position hydraulic colum jack fitted with support 1.820.208.000 under gearbox sump.
5. Unscrew two screws securing rear engine flexible mounting to body.

UNDERBODY COMPONENTS

Gearbox-differential unit (continued)

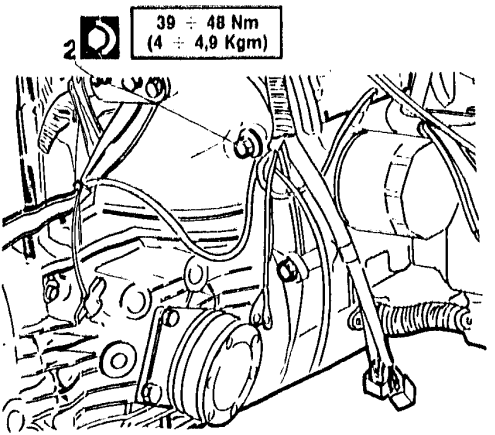

1. Raise the engine unit enough to extract the central mounting bolt previously slackened.
2. Lower the jack enough to unscrew and remove the engine/gearbox union bolts, with caution.

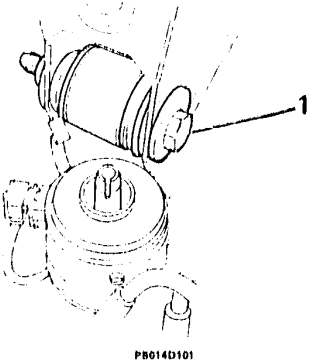

- Pull back the gearbox unit enough to free the control shaft from the flywheel bush.
- Slowly lower the jack and extract the gearbox-differential unit complete.

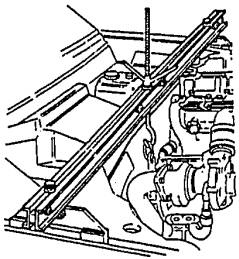

REMOVAL AND REPLACEMENT (For TURBODIESEL models)

REMOVAL AND REPLACEMENT (For TURBODIESEL models).....13 - 16

REMOVAL AND REPLACEMENT (For TURBODIESEL models)

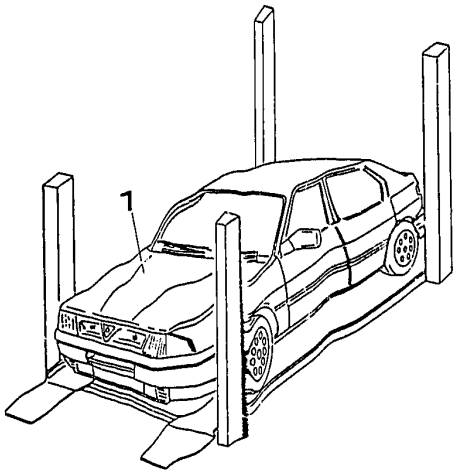

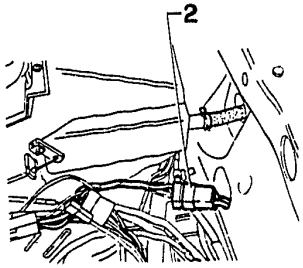

1. Place the vehicle on a lift.
– Disconnect the negative cable from the battery.

- Working from inside the passenger compartment, withdraw the knob from the gear stick together with the bellows.
2. Disconnect the electrical connection from the odometer sensor cable and withdraw the wiring from the rubber cable runner and free it from any clamps.

REMOVAL AND REPLACEMENT (For TURBODIESEL models) (continued)

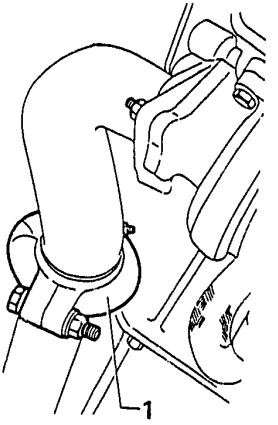

1. Unscrew the bolts and remove the collar in order to free the exhaust gas connection from the front element of the exhaust pipe.

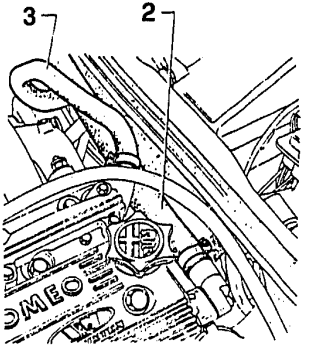

2. Loosen the clamp and disconnect the oil vapour breather pipe.
3. Loosen the clamp and disconnect the engine coolant delivery hose from the heater.

Keep the cooling system hose facing upwards to prevent spillage.

REMOVAL AND REPLACEMENT (For TURBODIESEL models) (continued)

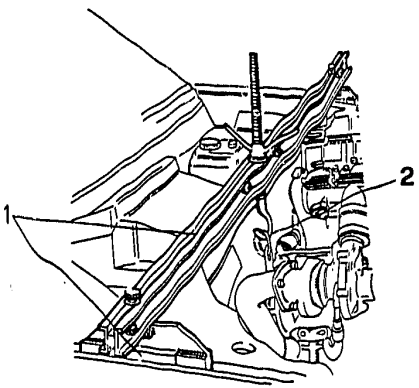

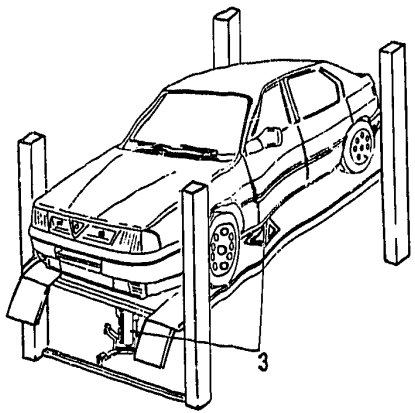

– Working from the engine compartment unscrew the four upper screws securing the gearbox to the engine.
1. Place the engine support tool in the groove on the wheel housing.
2. Hook the lifting bracket to the rear of the engine and take the weight on the hook.

- Raise the vehicle and remove the front and central elements of the exhaust pipe (vedere GR. 04).
3. Place a column lift under the central part of the engine front crossmember, raise the front part of the vehicle and rest it on the two safety stands in order to take the loading off the front suspension.

⇩

REMOVAL AND REPLACEMENT (For TURBODIESEL models) (continued)

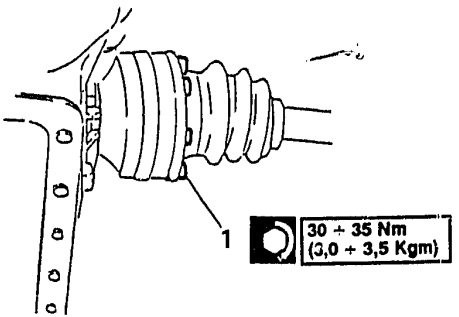

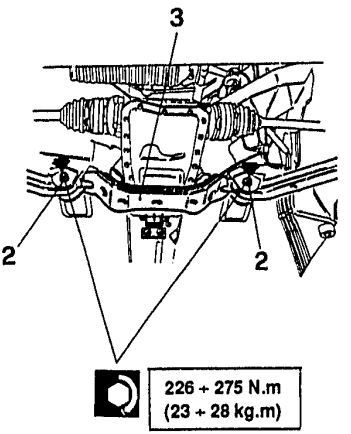

1. Loosen the screws securing the drive shafts to the differential halfshafts and disconnect them.
2. Loosen and remove the bolts securing the crossmember and transversal rocker arms to the body.
3. Loosen the screws securing the crossmember to the lateral flexible supports and remove the crossmember.

⇩

REMOVAL AND REPLACEMENT (For TURBODIESEL models)(continued)

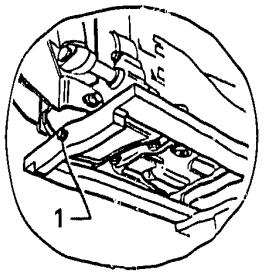

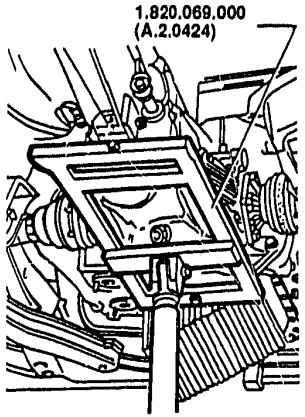

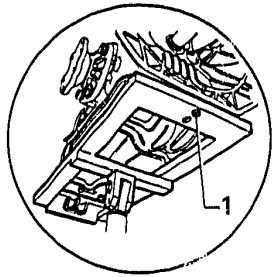

- Disconnect the electrical wiring of the reversing light control switch from the gearbox rear cover.
1. Place support N° 1.820.069.000 (A.2.0424) and relative column lift under the gearbox sump and secure it as shown in the diagram.

⚠ The rear attachment of the tool employs the same screw that unites the gearbox rear support which must therefore must be removed and screwed back on in order to attach the tool.

⇩

REMOVAL AND REPLACEMENT (For TURBODIESEL models) (continued)

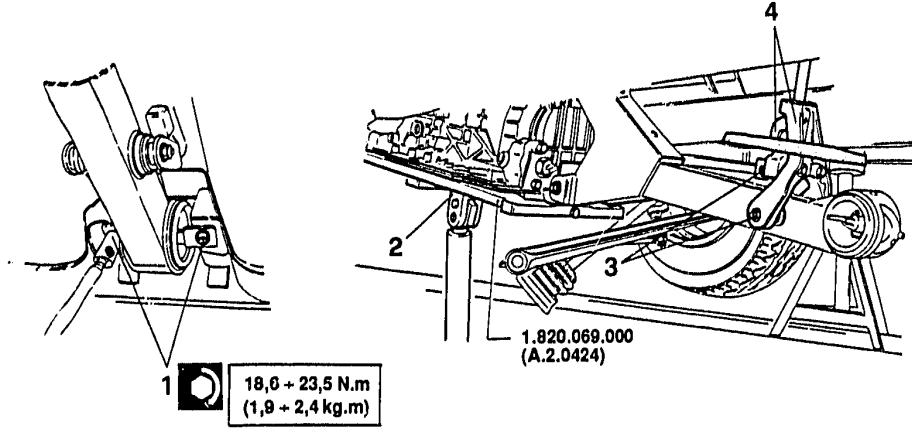

1. Loosen the two screws securing the engine unit rear support to the body.
2. Lower the column lift located under the gearbox and, at the same time, gradually release the tie-rod of the engine support tool.
3. Loosen and remove the two bolts securing the control lever and relative support.
4. Disconnect the control lever and support from the gearbox rear support and remove the bushings and spacers from the couplings.

REMOVAL AND REPLACEMENT (For TURBODIESEL models) (continued)

- Loosen the remaining two screws securing the gearbox-engine and carefully back off the gearbox assembly until the end of the power take-off shaft of the gearbox can be freed from the spigot on the engine flywheel.
- Slowly lower the column lift in order to remove the gearbox-differential assembly and then position the gearbox horizontally and release the articulation of the tool.

Withdraw the thrust bearing from its support on the gearbox in order to prevent it from getting damaged.

1. Separate the flexible supports from the supports by unscrewing the relative retaining screws.
2. Remove the gearbox supports by unscrewing the relative retaining screws.

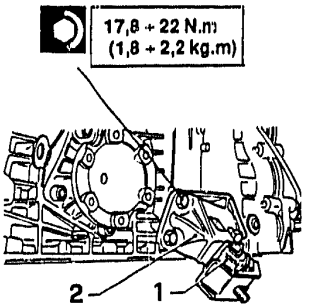

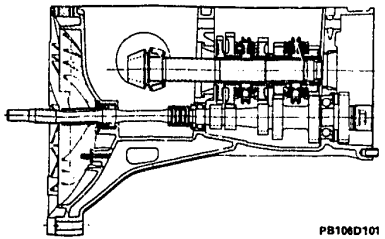

PB106D101

RODS AND FORKS

RODS AND FORKS

DISASSEMBLY ..... 13 - 23
CHECKS AND INSPECTIONS ..... 13 - 29
REASSEMBLY ..... 13 - 30

RODS AND FORKS

DISASSEMBLY

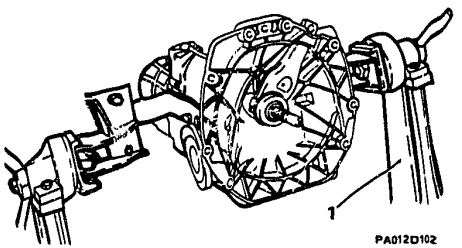

PA012D102

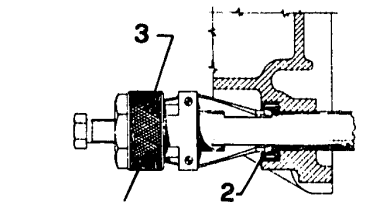

PA012D101

1. Set the gearbox-differential unit on a suitable trestle.
2. Extract the selector rod seal from the rear cover.

. If the seal is to be extracted from the assembled gearbox (on the bench or in the vehicle) tool No. 1.821.098.000 (A.3.0429) must be used.

RODS AND FORKS

DISASSEMBLY (continued)

4x2

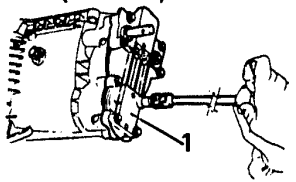

PA013D101

4x4

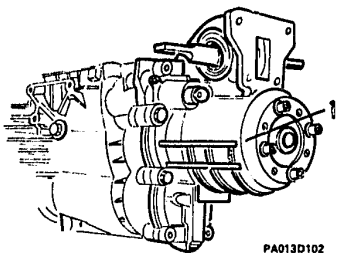

PA013D102

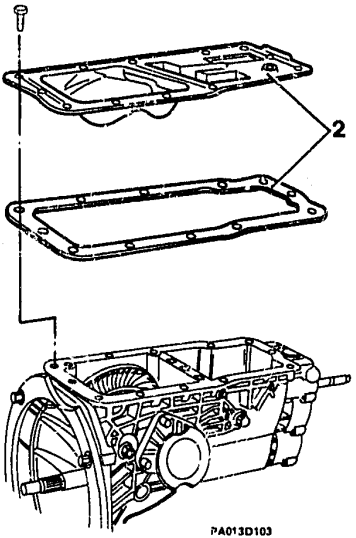

PA013D103

1. Remove the rear cover (complete with electromagnetic coupling for 4x4 versions) and the relative gasket.

2. Remove the oil sump and relative gasket.

RODS AND FORKS
DISASSEMBLY (continued)

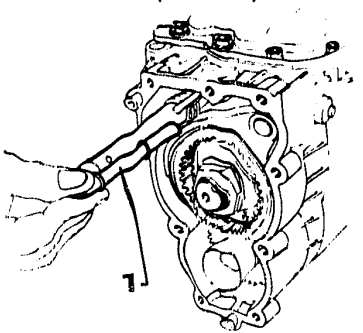

PA014D102

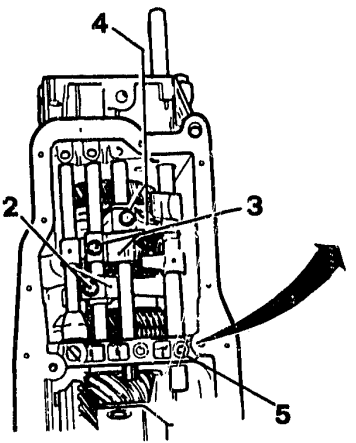

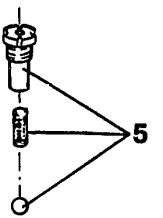

PA014D101

1. Extract the selector rod return spring pin.
2. Undo the 1st and 2nd gear selector yoke retension screw from the selector shaft.
3. Extract the 1st and 2nd gear selector lever, undoing the retaining screw.
4. Slacken and unscrew the 3rd and 4th gear selector yoke retaining screw from the relative rod.
5. Unscrew the lockball plug with ball and spring.

RODS AND FORKS

DISASSEMBLY (continued)

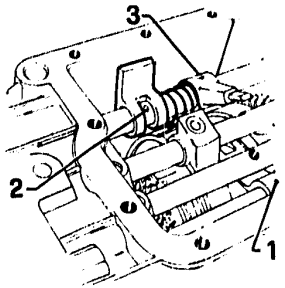

PA015D101

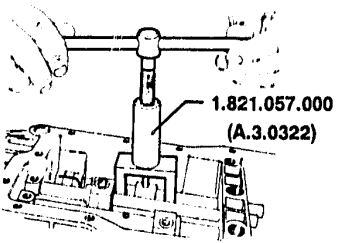

PA015D102

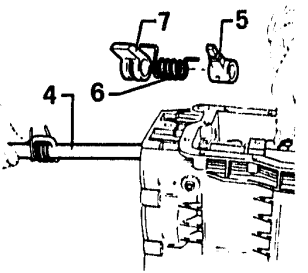

PA015D103

- Using tool No. 1.821.057.000 (A.3.0322) extract the following pins:

1. The reverse and 5th gear selector lever pin.
2. The safety selector lever pin.
3. The gear selector pin.
4. Extract the selector rod.
5. Recover the selector.
6. Recover the spring.
7. Recover the lever.

RODS AND FORKS
DISASSEMBLY (continued)

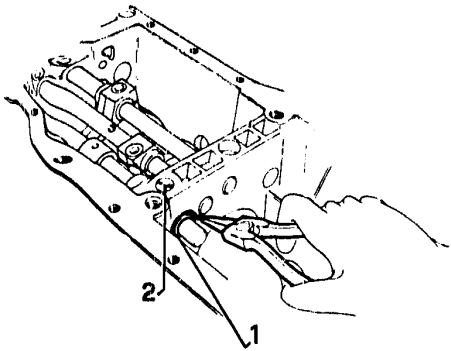

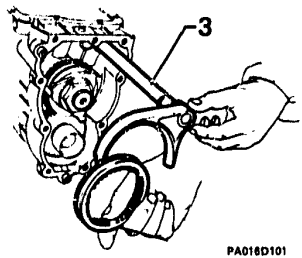

- Engage the 5th gear.

1. Remove the retaining circlip on the 5th and reverse gear selector rod located on the central bulkhead.
2. Unscrew and remove the lockball plug, then remove the two lockballs themselves.
3. Withdraw the 5th and reverse gear selector rod complete with control yoke and relative synchroniser retaining ring.

RODS AND FORKS
DISASSEMBLY (continued)

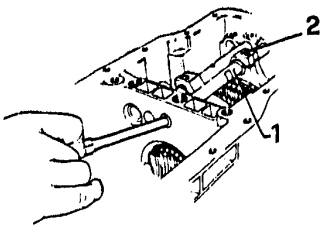

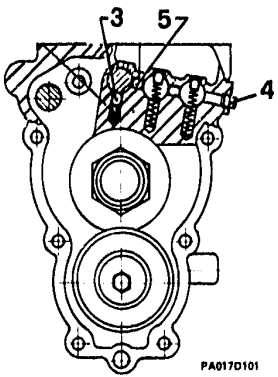

1. Using a drift, push out the 3rd and 4th gear selector rod.
2. Recover the respective yoke from the synchroniser sleeve.

- Proceed in the same way for extracting the 1st and 2nd gear selector rod together with yoke.

When extracting the selector rods take care to prevent the lockballs from engaging in the slots in the rods, thus obstructing their removal, by rotating the rods appropriately as the slots appear.

3. Remove the three lock slugs for the three selector rods from their seats in the gearbox rear bulkhead.
4. Remove the plug from the lockball access channel designed for shafting the lockballs with a screwdriver.
5. Remove the two selector detent lockballs.

RODS AND FORKS (continued)

CHECKS AND INSPECTIONS

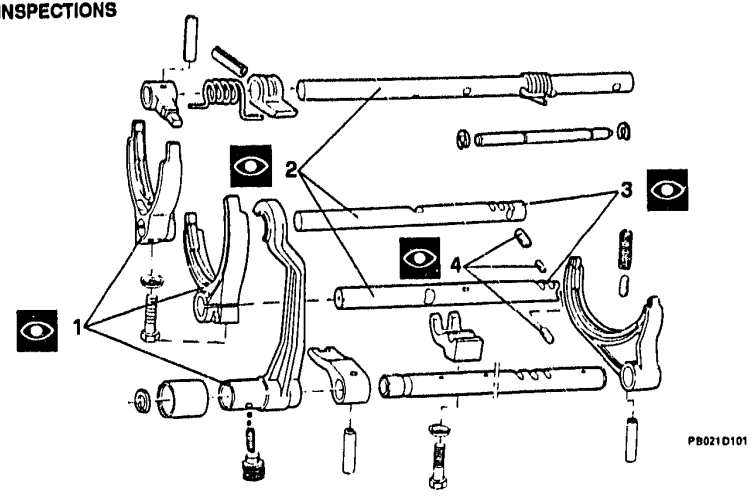

- Carefully wash all components to simplify the identification of surface defects, wear and serviceability.

1. Make sure that the gear selector forks are not excessively worn or distorted.
2. Ensure that the selector rods are not distorted.
3. Check that the selector rod slots are not damaged.
4. Inspect the selector rod lockballs and gear detent balls for scrapes or seizure marks.

RODS AND FORKS (continued)

REASSEMBLY

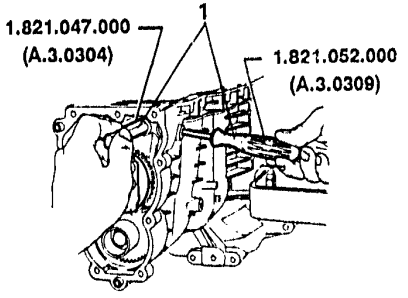

- Position the 1st and 2nd gear and 3rd and 4th gear selector rod forks on their relative synchroniser sleeves.

1. Fit the pre-greased detent slugs in the horizontal seats in the gearbox, using guide tool No. 1.821.047.000 (A.3.0304) and insertion tool No. 1.821.052.000 (A.3.0309).
2. Insert the dummy rod No. 1.821.046.000 (A.3.0303) in the 3rd and 4th gear selector rod seating. Fit a new lock spring and slug, both pre-greased, through the hole in the dummy rod, and using slug insertion tool No. 1.821.052.000 (A.3.0309),compress the assembly so that the dummy rod can be pulled back to hold it in position.

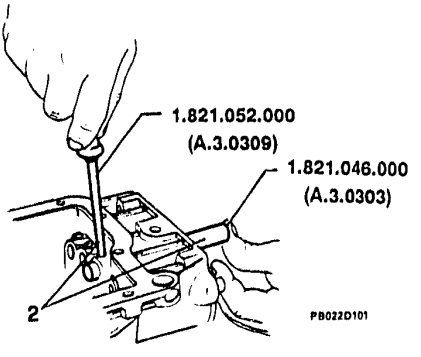

- Insert the recpective selector rod in the gearbox seating while keeping pressure on the dummy rod at the same time. Complete rod assembly by guiding it into the fork eye, aligning the hole in the latter with the slot in the rod.

RODS AND FORKS
REASSEMBLY (continued)

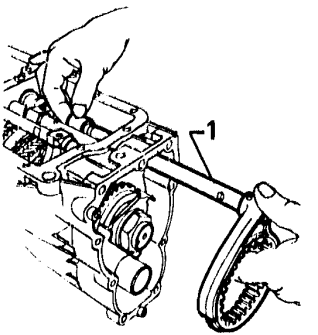

PA020D101

- Grease and fit the 1st and 2nd gear selector rod lock-ball and spring using tools No. 1.821.047.000 (A.3.0304) and No. 1.821.052 (A.3.0309). Insert the previously greased slug in the radial hole in the rod, then insert the rod itself in its housing in the gearbox casing, making sure of the reciprocal position of slot and lock slug and guide the rod through the relative selector fork eye.
- Using tools No. 1.821.046.000 (A.3.0303) and No. 1.821.052.000 (A.3.0309) montare, previo ingrassaggio, la molla e il nottolino posizionamento asta di comando V velocità e R.M.

1. Insert the selector rod complete with 5th gear selector fork into the bores in the 5th and reverse gear engaging lever and the the reverse selector fork with relative sliding sleeve.

- Close the detent slug housing with its threaded plug.

RODS AND FORKS
REASSEMBLY (continued)

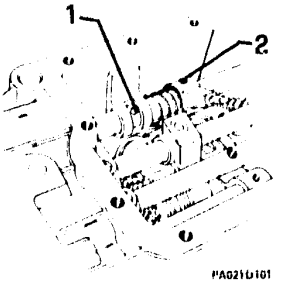

- Line up the holes, and using tool No. 1.821.057.000 (A.3.0322) insert the roll pin retaining the 5th gear lever to the selector rod.
- Insert the two lockballs in their seat in the gearbox central bulkhead, together with relative springs, tighten down the threaded plug, and then slacken it off a quarter turn
- Fit the seal on the end of the 5th and reverse gear selectorrod, at the differential side.
- Introducing it from the rear end of the gearbox, partially fir the selector rod; then guide it into the selector, the spring and the lever, and complete its insertion.
- Line up the lever eye axes with those on the rods and fit the roll pins using tool No. 1.821.057.000 (A.3.0322).

. The gear selectro rod must be adjusted with shims when fitting the roll pin.

2. The other lever must be fitted so as to bear up against the edge of the lever itself, with the excess portion projecting from the selector side.

RODS AND FORKS
REASSEMBLY (continued)

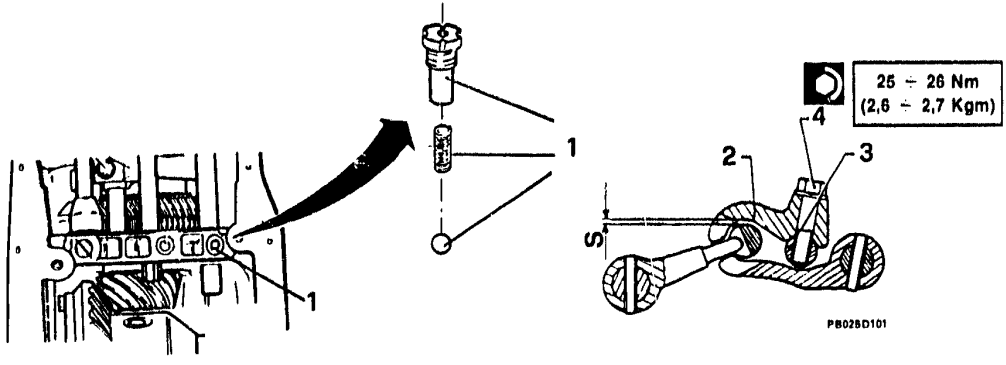

1. Fit the lockball plug complete with ball and spring, and tighten it to the specified torque.
2. Fit the retaining pin for the selector od return spring.
3. Position the 1st and 2nd gear engaging lever on the relative rod.
3. Rotate the rod until the specified gap "S" between 1st and 2nd gear engaging lever and the 3rd and 4th gear selector rodis obtained.

⟼⟻	**Gap "S" between 1st and 2nd gear engaging lever and 3rd and 4th gear selector rod.**	**1,4 ÷ 1,9 mm**

4. Line up the holes and fit the retaining screw, tightening it to the specified torque.

RODS AND FORKS

REASSEMBLY (continued)

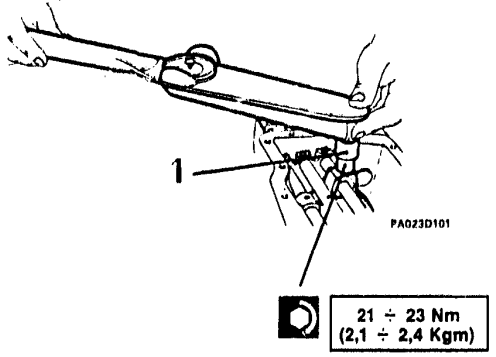

1. Using calipers centre the 1st and 2nd gear and 3rd and 4th gear selector forks with the synchroniser rings, and fit the retaining screws to the specified torques.

Before fitting retaining screws, clean the threads with OMNIFIT activator and then apply OMNIFIT 150 H mastic.

NOTE Check the correct operation of the spring-lock-ball-rod assembly, making sure that gear change is achieved without snatching and that the gears do not slip out of mesh once engaged.

RODS AND FORKS

REASSEMBLY (continued)

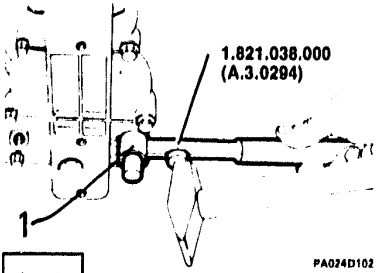

4x2

- Position the rear cover with new gasket on the gearbox centering recesses, refit the oil breather valve and relative mounting plate, and tighten the bolts.

- Using a new gasket, fit the oil sump to the gearbox casing and replace the retaining bolts.

– **Lubricate** the selector rod oil seal and its seating on the rod, using the recommended grease (ISECO Molykote BR2).

1. Fit the seal to the rod using tool No. 1.821.038.000 (A.3.0294).

- Fit the relative lever to the selector rod and insert the roll pin using a pin punch.

4x4

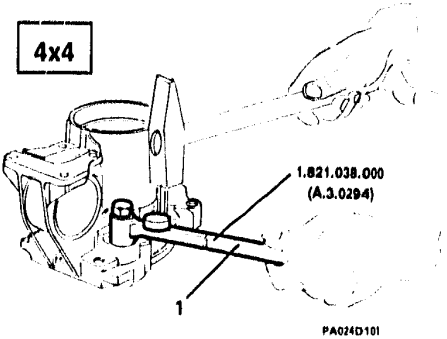

- Refit the reverse gear light switch to the rear cover, tightening it to the specified torque:

40 ÷ 49 Nm
(4,1 ÷ 5,0 Kgm)

NOTE **Check the correct operation of the spring-lock-ball-rod assembly, making sure that gear change is achieved without snags and that the gears do not slip out of mesh once engaged.**

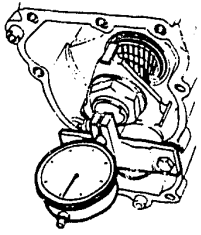

PB107D101

SHAFTS AND GEARING

SHAFTS AND GEARING

DISASSEMBLY ..... 13 - 36
Pinion shaft gears ..... 13 - 36
Control shaft ..... 13 - 38
Reverse gear shaft ..... 13 - 40
Primary shaft ..... 13 - 41
Synchronizer units ..... 13 - 46
CHECKS AND INSPECTIONS ..... 13 - 47

SHAFTS AND GEARING

DISASSEMBLY

Pinion shaft gears

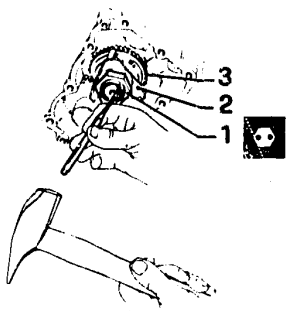

PA025D101

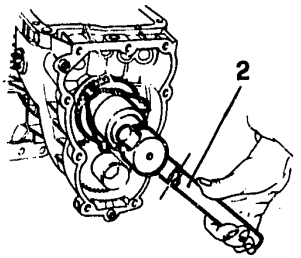

PA025D102

- Remove selector rods and forks
- Remove the differential casing
- Engage two gears by manipulating their respectice sleeves, so as to prevent the pinion from turning.

1. Open up the peened-over part of the retaining nut, using a pin punch.
2. Free the nut and remove the synchroniser hub complete.
3. Remove the 5th gear pinion complete with synchroniser unit and bush.

- If necessary, slacken the primary shaft locking screws.

DISASSEMBLY

Pinion shaft gears (Continued)

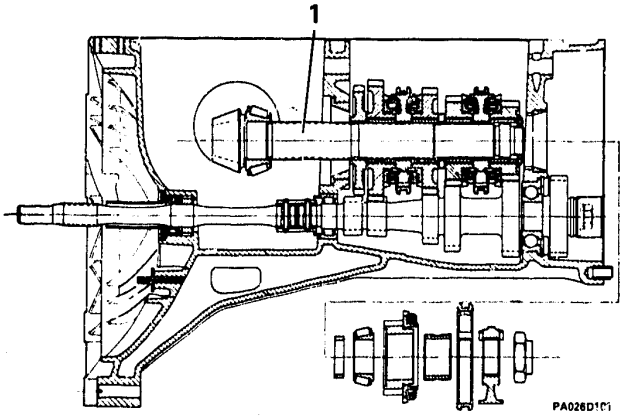

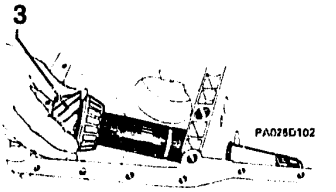

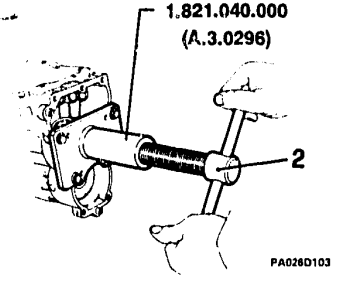

1. Push the pinion shaft towards the differential casing and one by one slide off the pinions (1st, 2nd, 3rd and 4th gears), making sure to mark the order and position of the gear bushes for re-assembly.
2. If the inner taper-roller bearing race is tight on the pinion shaft and impedes itr removal, use tool No. 1.821.040.000 (A.3.0296).
   - Insert the first part of tool No. 1.821.114.000 (A.3.0490) in correspondance with the 4th gear drive pinion.
3. Refit the rear pinion shaft needle bearing.
   - Fit the second part of tool No. 1.821.114.000 (A.3.0490) in correspondance to the 5th gear drive pinion, and clamp it to the pinion with the respective nut.

DISASSEMBLY (continued)

Control shaft

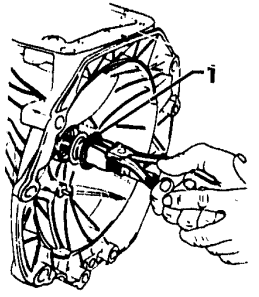

PB030D101

1. Extract seal ring from control shaft to gain access to oil seal.

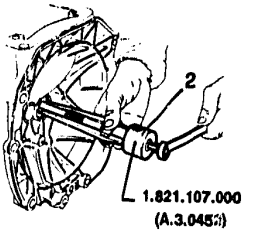

PB030D102

2. To extract oil seal with unit assembled, proceed as shown in figure, using tool N° 1.821.107.000 (A.3.0452).

DISASSEMBLY

Control shaft (continued)

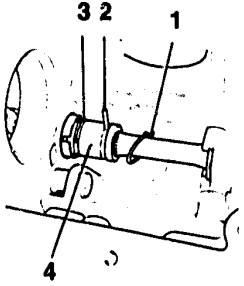

PB031D101

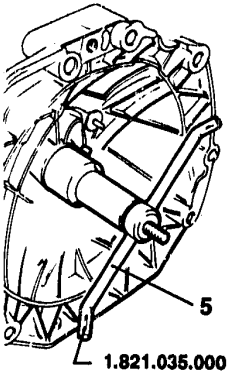

PB031D102

1. Remove retainign spring.
2. Remove pin holding control shaft to coupling.
3. Remove retaining clip of pin hoding primary shaft to coupling.
4. Remove pin and withdraw coupling from primary shaft.
5. After dismantling control shaft, if necessary, extract the control shaft bush using tool N° 1.821.035.000 (A.3.0291). With the same tool the oil seal is extracted at the same time.

DISASSEMBLY (continued)
Reverse gear shaft

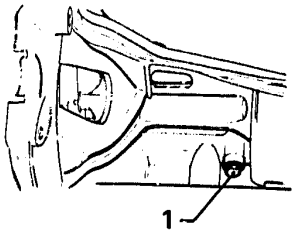

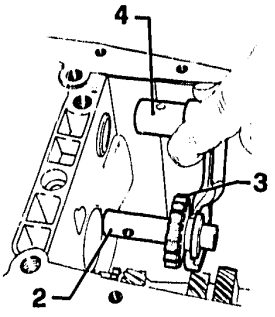

PA028D101

1. Unscrew and remove the reverse gear shaft setscrew.
2. Extract the reverse gear shaft.
3. Extract the idle pinion.
4. Extract the reverse gear selector fork.

DISASSEMBLY (continued)

Primary shaft

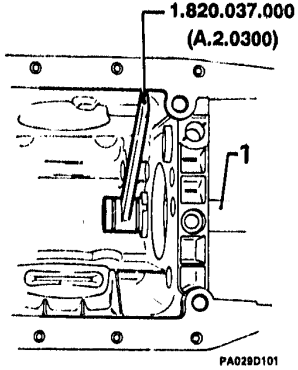

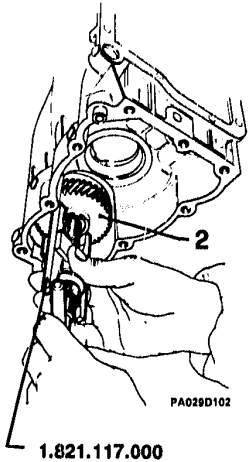

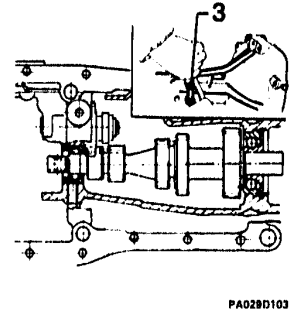

1. Set the clamping tool No. 1.820.037.000 (A.2.0300) on the end of the primary shaft to stop it turning.
- Undo the primary shaft lock screw on its rear needle bearing and remove the oil shield cup.
2. Using tool No. 1.821.117.000 (A.3.0495) extract the 5th geardrive pinion.
- Remove the key retaining the 5th gear pinion to the primary shaft.
3. Slacken and remove the lockscrew for the primary shaft front floating bearing.

DISASSEMBLY

Primary shaft (Continued)

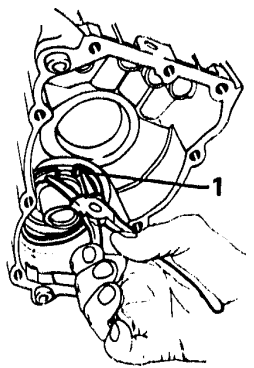

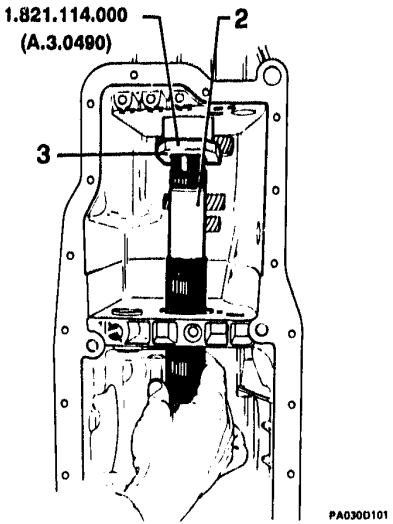

1. Extract the rear needle bearing retaining circlip.
2. Refit the pinion shaft in the gearbox-differential casing.

3. Insert tool No. 1.821.114.000 (A.3.0490) in correspondance to the 5th gear drive pinion.

- Refit the rear pinion shaft needle bearing.
- Refit the 5th gear drive pinion bush.

- Refit the synchroniser hub and sleeve.
- Tighten the nut.

DISASSEMBLY

Primary shaft (Continued)

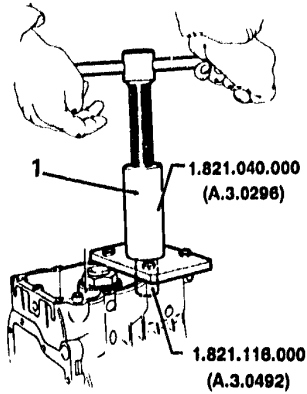

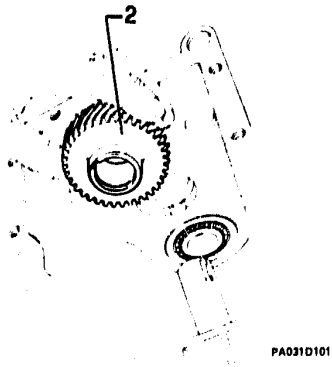

1. Fit tool No. 1.821.040.000 (A.3.0296) with terminal No. 1.821.116.000 (A.3.0492) to the gearbox-differential casing, tightening the bolts carefully so as not to damage the casing threads.
   - Using the above tool, push the primary shaft out towards the differential housing.
   - Slide off the front floating bearing from the primary shaft.
2. Extract the 5th gear drive pinion and relative key.



DISASSEMBLY

Primary shaft (Continued)

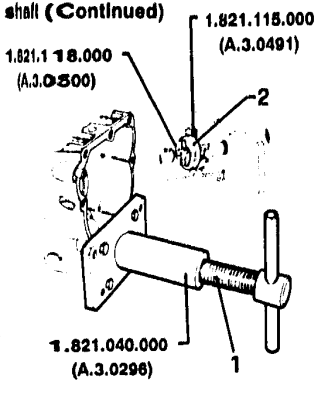

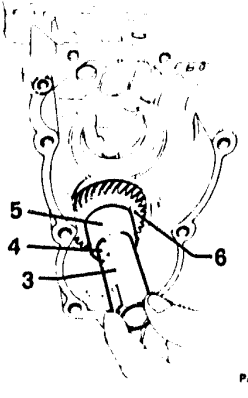

1. With tool No. 1.821.040.000 (A.3.0296) still fitted, remove the pinion shaft and all the elements supported by the shaft itself and tool No. 1.821.114.000 (A.3.0490).
2. Fully screw in tool No. 1.821.040.000 (A.3.0296) and attach tool No. 1.821.115.000 (A.3.0491) and tool No. 1.821.118.000 (A.3.0500) to its mainscrew. Unscrew tool No. 1.821.040.000 (A.3.0296) in order to extract the rear primary shaft needle-bearing from its seating, then spearate it from the extractor tool.
3. Withdraw the primary shaft from the gearbox casing through the rear bearing seating.
4. Remove the key.
5. Remove the spacer.
6. Remove the 3rd gear pinion.

DISASSEMBLY

Primary shaft (Continued)

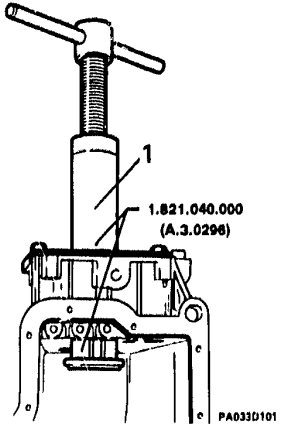

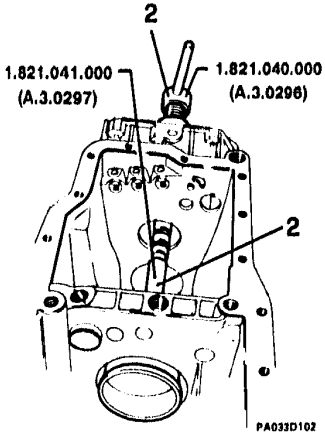

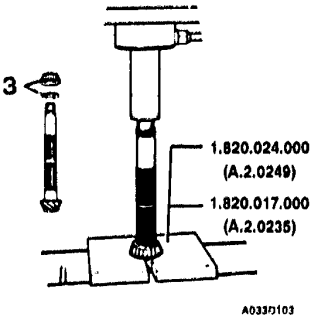

1. Using tool No. 1.821.040.000 (A.3.0296), extract the outer race of the rear bearing from the gearbox-differential casing.
2. Using tools No. 1.821.040.000 (A.3.0296) and No. 1.821.041.000 (A.3.0297), extract the outer race of the front pinion shaft bearing from the gearbox-differential casing.
3. Using a press, plate No. 1.820.024.000 (A.2.0249) and half-washers No. 1.820.017.000 (A.2.0235), extract the inner race of the front pinion shaft bearing, and the bearing washer.

DISASSEMBLY (continued)

Synchronizer unit

1. Extract the retaining ring.
2. Extract the synchroniser ring.
3. Extract the index sector.
4. Extract the stop sector.
5. Extract the stop bands.

NOTE The 1st gear synchroniser unit has only one stop band.

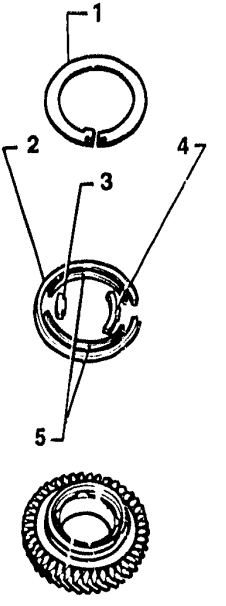

CHECKS AND INSPECTIONS

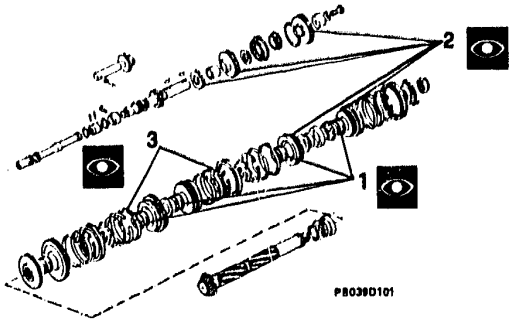

- Carefully wash the components and examine carefully to see any surface defects.

1. Check wear of pinion shaft bushes, making sure that the gear working surfaces are free from scratches and signs of seizing. Replace any faulty parts.
2. Inspect the teeth of the primary shaft and the bevel pinion to see whether they are meshing evenly. If any gears show signs of irregular wear of any teeth are chipped, replace accordingly and check that the gears with which they mesh have not been damaged. Proceed likewise for splines on primary shaft, control shaft and pinion.
3. Check that gear teeth and splines on synchronizer have no cuts, signs of seizing or excessive wear. Replace any defective parts.

CHECKS AND INSPECTIONS (continued)

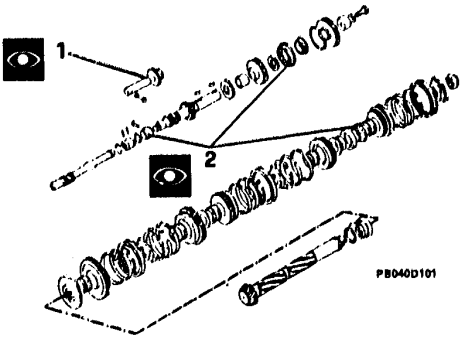

- Make sure that sliding surfaces are free from pitting, the sleeves slide smoothly on their hubs and the synchronizer rings are not excessively worn.

1. If the parts of the reverse gear shaft assembly are found to be faulty, replace them with the available spares.

2. Closely inspect bearings, spinning them slowly. If the bearing is in good condition, there will be no vibrations, noise or sticking.

- Inspect the surfaces of the rings and revolving components for scoring, marks or signs of abrasion due to foreign bodies. Replace any faulty parts.

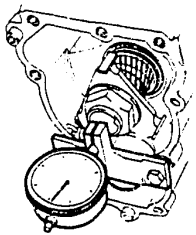

SHAFTS AND GEARING (Continued)

ADJUSTMENTS

SHAFTS AND GEARING

REASSEMBLY ..... 13 - 49
Primary shaft ..... 13 - 49
Reverse gear shaft and pinion shaft bearing outer races ..... 13 - 51

ADJUSTMENTS

Determination of pinion generatrix ..... 13 - 54
Pinion shaft bearing pre-load calculation ..... 13 - 58
Control shaft ..... 13 - 62

SHAFTS AND GEARING

REASSEMBLY

Primary shaft

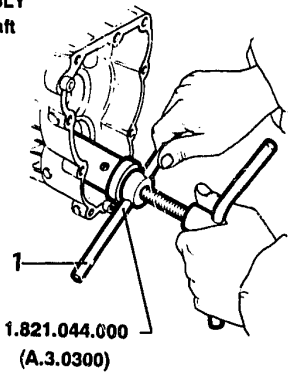

- Fit the 3rd gear pinion, spacer and 4th gear drive pinion key to the primary shaft.
- Insert the shaft in its seat in the gearbox-differential casing, and fit the 4th gear pinion to the shaft.
- Lock the primary shaft at the front end using tool No. 1.820.037.000 (A.2.0300).

1. Fit tool No. 1.821.044.000 (A.3.0300) to the rear end of the primary shaft and use it to mount the 4th gear pinion.

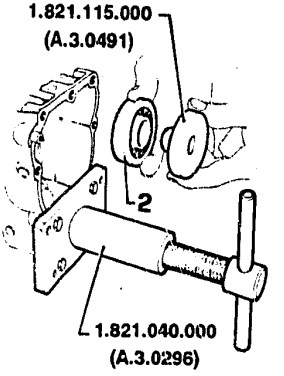

2. Using tool No. 1.821.115.000 (A.3.0491) and No. 1.821.040.000 (A.3.0296) fit the rear ball bearing in the gearbox-differential casing.

Use tool No. 1.821.040.000 (A.3.0296) to tighten the bolts in the casing, so as not to damage the threads.

REASSEMBLY

Primary shaft (continued)

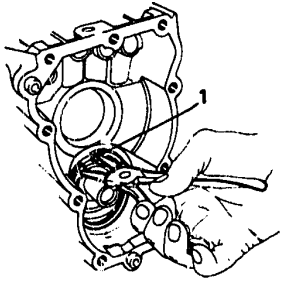

1. Using circlip pliers, fit retaining circlip on its housing in the rear bearing housing.
- Keeping the primary shaft immobile with tool N° 1.821.037.000 (A.2.0300), fit tool N° 1.821.044.000 (A.3.0300) on the rear end of the same shaft and centre it up in the rear ball bearing. Bring the primary shaft to bear against the rear bearing.
- Fit the roller bearing to the front end of the primary shaft, lining up the reference hole of the bearing outer race with the corresponding hole on the gearbox - differential casing. Insert the screw in the hole and tighten home.

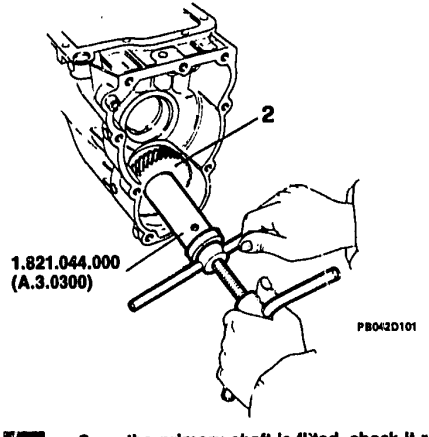

Once the primary shaft is fitted, check it rotates freely in the bearings without sticking.

- Fit the key for the fifth gear pinion to its seat in the primary shaft.
2. Fit fifth gear pinion to its seat on the primary shaft on outer rear end of gearbox casing, using tool N° 1.821.044.000 (A.3.0300).
- Fit oil shield cap in its seat on fifth gear pinion and drive the screw into the shaft without fully tightening it.

REASSEMBLY (continued)

Reverse gear shaft and pinion shaft bearing outer race

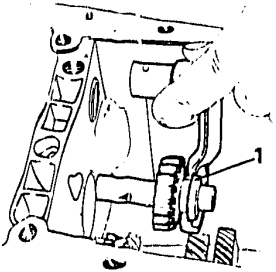

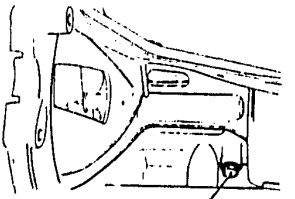

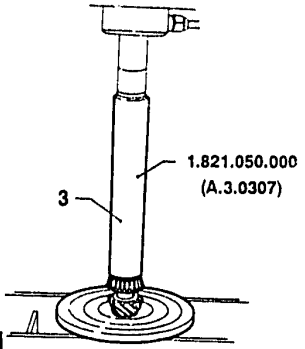

22,5 ÷ 24,5 Nm
(2,3 ÷ 2,5 Kgm)

1. Fit the reverse gear shaft complete with idle gear and selector fork in its housing in the gearbox casing.
2. Tighten the reverse gear shaft lock screw to the specified torque.

- Grease (AGIP FI Grease 33 FD) the outer races of the pinion shaft taper roller bearings, then fit them to the gearbox casing using the same tools as used for dismantling: No. 1.821.040.000 (A.3.0296) for the rear bearing, and a combination of No. 1.821.040.000 (A.3.0296) and No. 1-821-041.000 (A.3.0297) for the front bearing.

Take care over refitting, making sure that the rings bear perfectly against the casing.

- Fit the correct choice of adjusting washer to the shaft.

3. Using a press and tool No. 1.821.050.000 (A.3.0307), fit the inner race of the taper roller bearing to the pinion shaft.

- If the synchroniser units were previously dismantled for overhaul, re-assemble them

REASSEMBLY

Pinion shaft bearing outer races (continued)

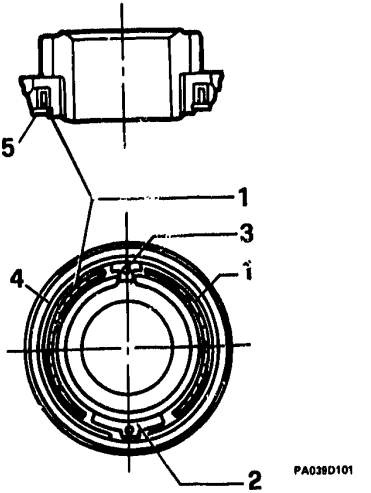

- For the 2nd, 3rd, 4th and 5th gears, proceed as follows:

1. Refit the stop bands.
2. Refit the stop sectors.
3. Refit the index sectors.
4. Fit the synchroniser ring to the band and sector assembly.
5. Retain the assembly with the circlip.

NOTE It is recommended that components from synchronisers for different gears should not be mixed.

- Proceed in the same way for the 1st gear synchroniser, bearing in mind that only one stop band is fitted



REASSEMBLY

Pinion shaft outer races (Continued)

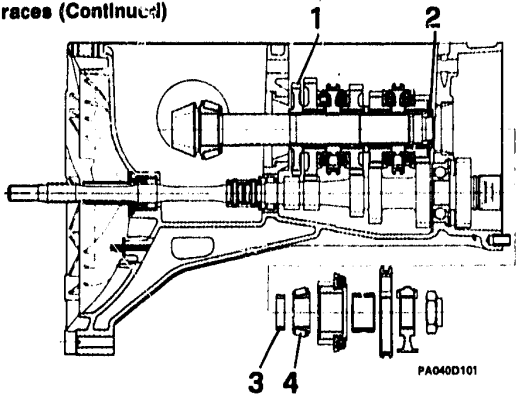

- Using the oil specified, lubricate the bushes and fit them to the gears respecting the positions before dismantling, so that bearing surfaces are maintained.
- Partially insert the bevel pinion shaft in the gearbox and fit the components in the gear pack in the order and orientation shown in the drawing, progressively shifting the pinion shaft until all elements are fitted in position.

1. Fit the reverse gear shaft with special care.

220 ÷ 245 Nm
(22,5 ÷ 25 Kg.m)

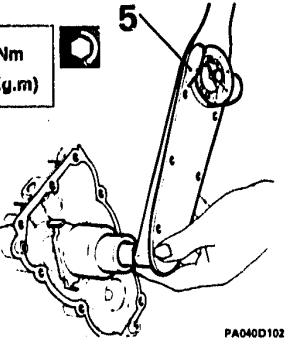

2. Fit the 4th gear bearing washer with great care.
3. Fit two 4,80 mm shim washers.
   in order to obtain the 9,60 mm required for the specified pre-loading.
4. Fit the inner race of the rear taper roller bearing and make sure it bears correctly against the ...a rondella di spallamento.
   - Fit the gear pinion bush and hub, and hand tighten the gear pack retaining nut.
5. Engage two gears and tighten the retaining nut to the specified torque.
   - Select the final adjusting washer.

ADJUSTMENTS

Determination of pinion generatrix

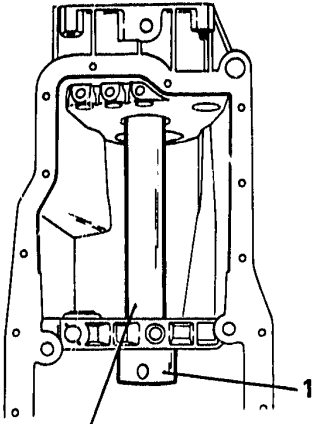

1.820.107.000
(A.4.0142)

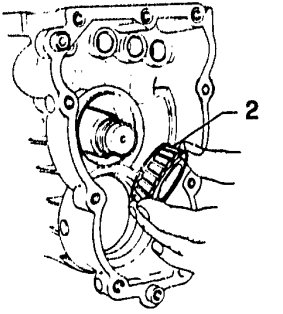

PB046D102

NOTE To avoid confusion in the calculation, use only the metric system.

- Fit the inner race of the pinion shaft front taper roller bearing to the dummy pinion No. 1.820.107.000 (A.4.0142).

1. Insert the dummy pinion in the gearbox casing.
2. Fit the inner race of the rear taper roller bearing to the dummy pinion shaft.



ADJUSTMENTS

Determination of pinion generatrix (continued)

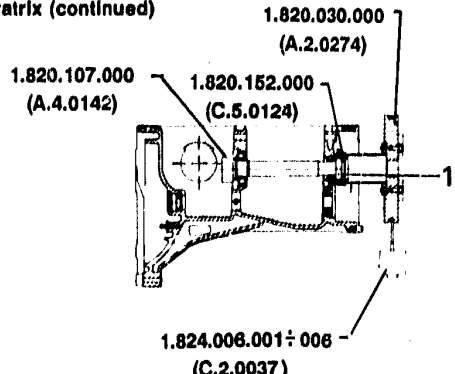

Forre -usedbearings 0,29 ÷ 0,59 Nm
Fornewbearings 1,17 ÷ 1,47 Nm

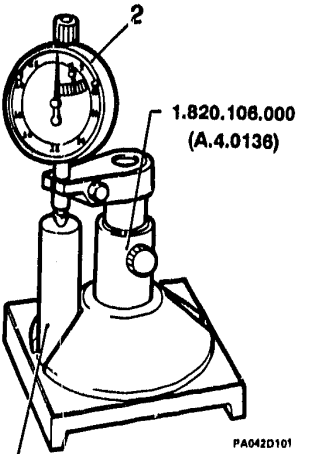

1. Using extension shaft No. 1.820.030.000 (A.2.0274), disk No. 1.820.152.000 (A.5.0124) with 100 mm radius and weight N° 1.824.006.001 ÷ 006 (C.2.0037), screw on the nut to the specified torque.
   - Rotate the dummy pinion shaft for a few turns in both direction to settle the bearings.
2. Fit a dial gauge (reading to hundredths of millimetres) to support No. 1.820.106.000 (A.4.0136), and reset it using a reference gauge, No. 1.825.005.000 (C.6.0161).

ADJUSTMENTS

Determination of pinion generatrix (continued)

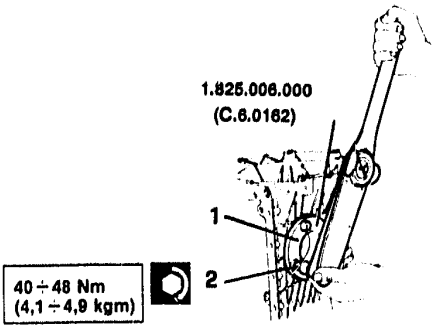

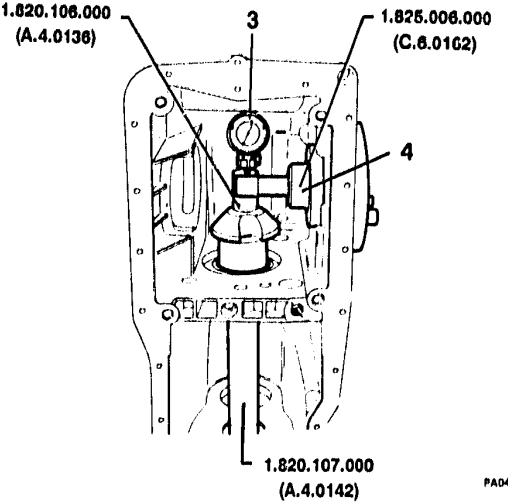

1. Fit tool No. 1.825.006.000 (C.6.0162) for the crown wheel axis reference, in the seating for the differential bearing housing.
2. Fit the four screws that hold it to the gearbox-differential casing, and tighten them to the specified torque, working dametrically.
3. Rest the differential support with dial gauge on the head of the dummy pinion shaft, and read off the shift "L1" from zero on the instrument.
4. Repeat the measurement fitting tool No. 1.825.006.000 (C.6.0162) in the opposite differential support seat and read off L2.

ADJUSTMENTS

Determination of pinion generatrix (continued)

Adjustment shim washer thickness "S"	$S = \frac{L1 + L2}{2} \cdot (\pm C)$

Example:

L1 = 0.86
L2 = 0.88
C = 0.13

$$S = \frac{L1 + L2}{2} \cdot (\pm C) = \frac{0.86 + 0.88}{2} \cdot (0.13) = 0.74 \text{ (Calculated shim thickness)}$$

0.75 (Selected shim thickness)

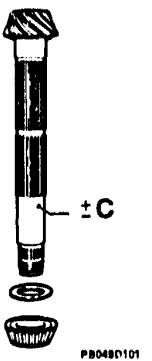

PB048D101

- Read dimension "C", positive or negative, marked on the pinion.
- Calculate thickness "S" of adjustment shim washer to be positioned behind pinion head.
- Select a washer from the range of spares available that has the thickness nearest to the calculated value.
- The shim thickness thus calculated is the one which ensures correct generatrix positioning, since the readings are made under actual pinion backlash conditions.

ADJUSTMENTS (Continued)

Pinion shaft bearing pre-load calculation

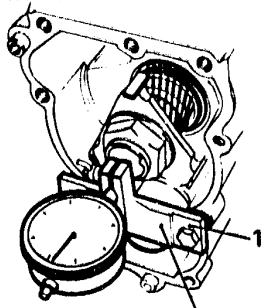

1.820.020.000 (A.2.0242)

NOTE In order to avoid confusion in the calculation, use only the metric system.

- After having fitted the elements, proceed with measuring the pinion shaft end float scrupulously following the sequence below.

1. Fit support No. 1.820.020.000 (A.2.0242) to the gearbox casing with the appropriate spacers, and mount a dial gauge (reading to hundredths of millimetres) on it.

- Tighten the bolts holding tool No. 1.820.020.000 (A.2.0242) to the gearbox casing, taking care not to damage the threads in the casing.

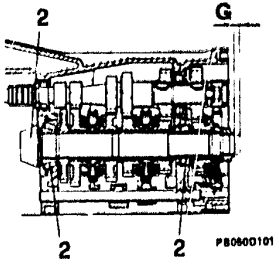

2. Rotate the pinion a few turns in both directions to settle the bearings.

- Push the pinion in one direction to reset the dial gauge to zero.

Then push the pinion shaft in the other direction and read the float value "G" on the gauge.

- If the measurement is to be repeated, the pinion shaft must be rotated again in both directions to re-settle the bearings.

ADJUSTMENTS

Pinion shaft bearing pre-load calculation (continued)

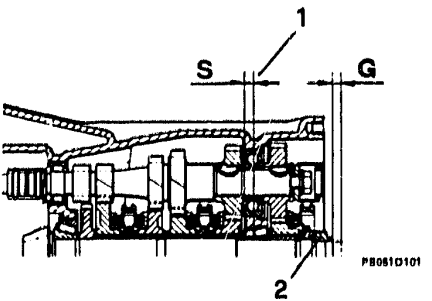

Rear shim washer thickness "S"	S = 9,60 - G - 0,10

220 ÷ 245 Nm (22,5 ÷ 25 kgm)

HINWEIS: 0,10 is a play correction value for pre-loading the taper roller bearings.

1. Calculate the rear shim thickness required to give the correct pre-load on the taper roller bearings using the above formula.
   - Free and remove the nut, hub, bush, bearing inner race and sample washer, making sure the elements in the gear pack do not move with respect to each other.
   - Fit the shim slected, the inner bearing race, all the elements in the 5th gear pack, and the nut.
2. Tighten the nut to the specified torque.

ADJUSTMENTS

Pinion shaft bearing pre-load calculation (continued)

For re-used bearings	0,39 ÷ 0,69 Nm
For new bearings	1,27 ÷ 1,57 Nm

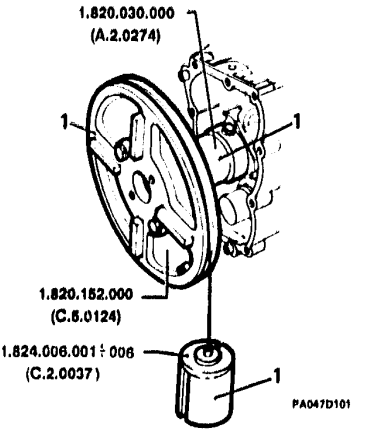

- Lubricate the gears of the main and pinon shafts with the specified oil (see TSN).
- Rotate the pinion shaft a few turns in both directions to settle the bearings.

1. Fit the extension piece No. 1.820.030.000 (A.2.0274), disk No. 1.820.152.000 (C.5.0124) with 100 mm radius, and weight N° 1.824.006.001÷006 (C.2.0037).

Note for 4x4 versions

To allow tool No. 1.820.152.000 (C.5.0124) to be fitted, substitute the control shaft hub with a hub for the 2x4 versions.

- Make sure that the weight descends regularly without stopping or turning the disk too fast. Ensure that in that condition the rotating torque meets the specification.

ADJUSTMENTS

Pinion shaft bearing pre-load calculation (continued)

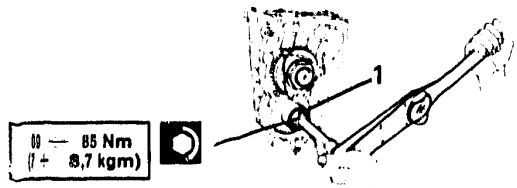

PA048D101

- If torque values are higher or lower than specifications, fit a 0,05 mm thicker or thinner rear shim, and re-check rotating torque.
- Peen over the nut with a hammer.

1. Engage two gears to prevent shaft movement, and tighten the retaining screws for the primary shaft cup to the specified torque.

ADJUSTMENTS(Continued)

Control shaft

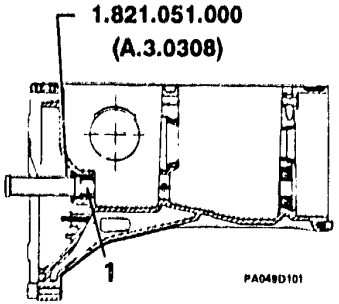

1. If previously removed, refit the control shaft bush to the gearbox casing using tool No. 1.821.051.000 (A.3.0308).
- Fit the bush to the primary shaft, lining up the pin holes. Fit the pin and a new retaining circlip.
- Guide the control shaft into its seating and couple it to the bush, refitting the pin and a new retaining circlip.

Make sure that the circlips sit correctly in their grooves and prevent the pins from coming out.

- Fit a new oil seal to the control shaft using tool No. 1.821.108.000. (A.3.0453) **lubricating**the seal line and shaft contact line with grease (ISECO Molykote BR2), and taking care not to damage the seal against the mating teeth.

ADJUSTMENTS

Control shaft (Continued)

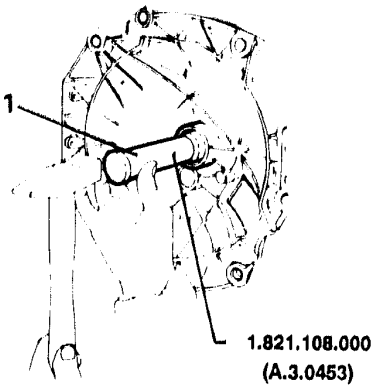

PA060D101

1. To fit the control shaft oil seal to an assembled unit, use tool No. 1.821.108.000 (A.3.0453).

- Mount the thrust bearing support in its seat in the differential casing, and refit its circlip.

NOTE **Make sure the circlip is properly seated, with its tabs facing the sleeve housing, keeping it pressed against the casing.**

Wrap the control shaft splines with tape.

- Check that the synchroniser hubs and rings operate correctly, and that gears can be engaged silently and easily.

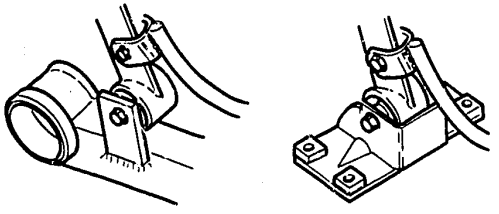

P5109D101

EXTERNAL GEAR SELECTOR LINKAGE

EXTERNAL GEAR SELECTOR LINKAGE (4x2)

REMOVAL - REFITTING ..... 13 - 64
DISASSEMBLY - REASSEMBLY ..... 13 - 67

EXTERNAL GEAR SELECTOR LINKAGE (4x4)

REMOVAL - REFITTING ..... 13 - 68
DISASSEMBLY - REASSEMBLY ..... 13 - 72

EXTERNAL GEAR SELECTOR LINKAGE (4x2)

REMOVAL - REFITTING

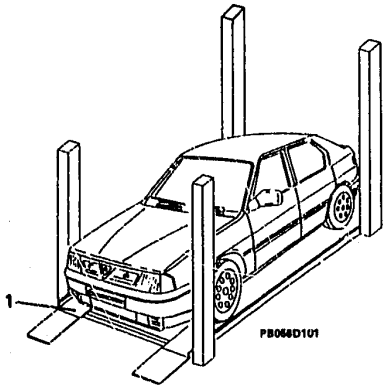

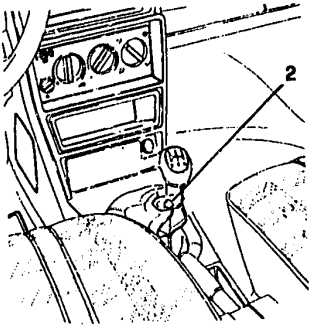

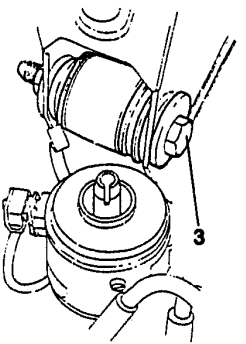

1. Set vehicle on lift.
2. Working from inside the vehicle, remove gear lever knob.
   - Disconnect negative battery terminal.
3. Loosen bolt of central engine unit flexible support.

EXTERNAL GEAR SELECTOR LINKAGE (4x2)

REMOVAL - REFITTING (continued)

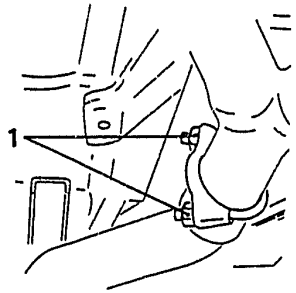

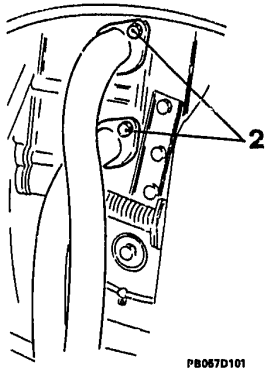

- Raise vehicle.

1. Loosen bolts of sleeve connecting the first two sections of exhaust pipe together.

2. Disconnect the manifolds from the heads and remove the first section.

⇩

EXTERNAL GEAR SELECTOR LINKAGE (4x2)

REMOVAL - REFITTING (continued)

1. Set column jack fitted with support underneath gearbox.
- Raise engine - power train unit, just enough to take off central engine unit rear flexible support previously loosened.
2. Unscrew two screws securing rear flexible support to body.
- Lower engine - power train unit enough to disconnect gear selector lever.

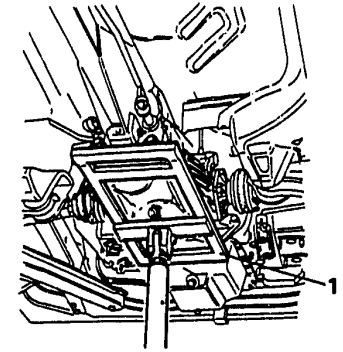

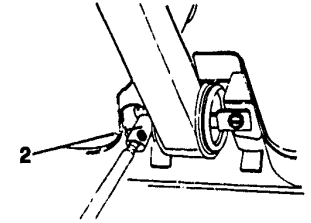

PB058D101

DISASSEMBLY - REASSEMBLY

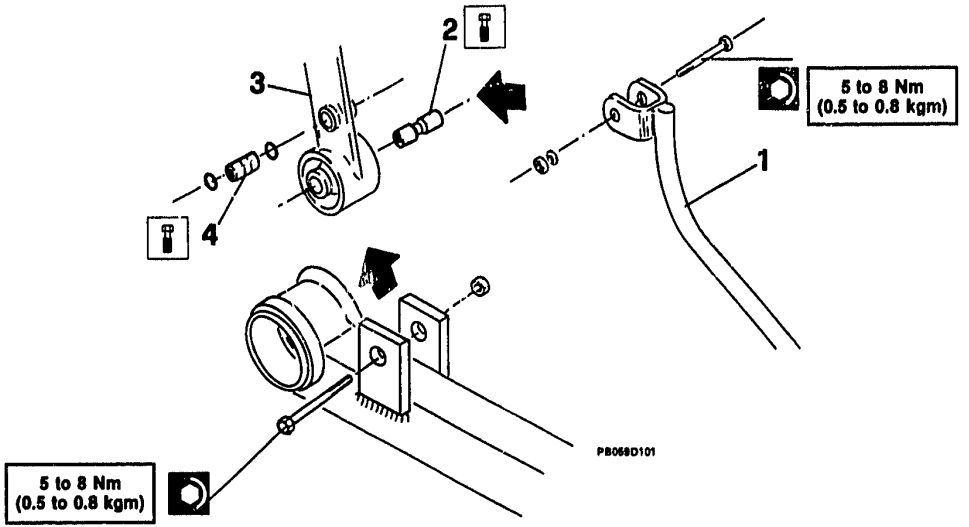

1. Disconnect gear selector rod from lever.
2. Slide off spacer.
3. Disconnect gear lever from mounting.
4. Slide off spacer.

- Clean metal components with solvent and check that all components are intact.

EXTERNAL GEAR SELECTOR LINKAGE (4x4)

REMOVAL - REFITTING

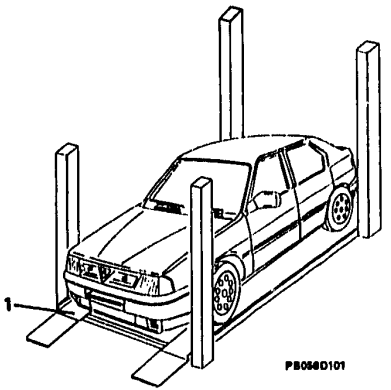

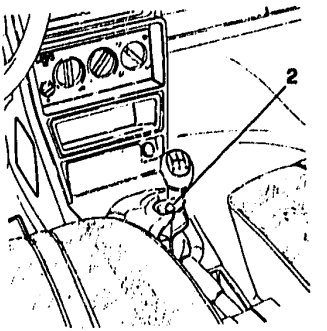

1. Set vehicle on lift.
   - Disconnect negative battery terminal.

2. Working from inside vehicle, slide off gear lever knob.

EXTERNAL GEAR SELECTOR LINKAGE (4x4)

REMOVAL - REFITTING (continued)

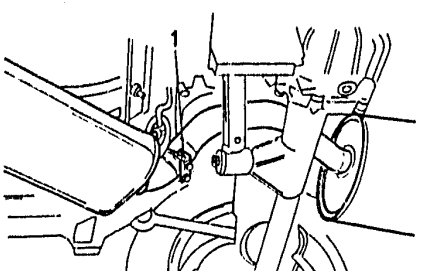

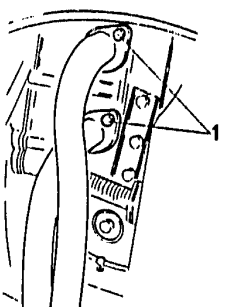

- Raise the vehicle.

1. Disconnect the exhaust manifold from cylinder heads and exhaust system.



EXTERNAL GEAR SELECTOR LINKAGE (4x4)

REMOVAL - REFITTING (continued)

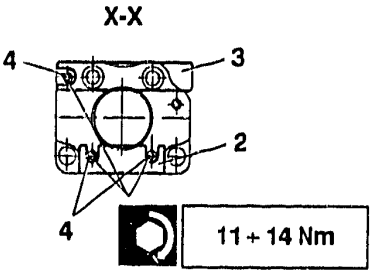

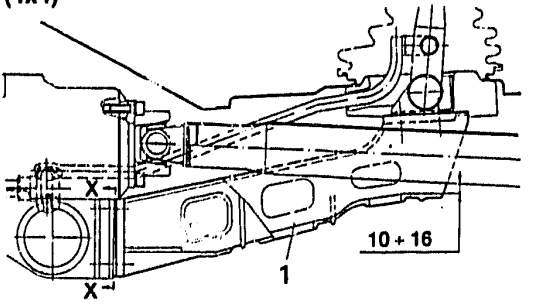

1. Remove the gear lever support (for 4x4 versions).

- When refitting the gear control lever it is necessary to check that it is the correct distance away from the drive shaft.

If it is not is is possible to operate as follows:

- Raise the vehicle.
- Check the distance between the support and the drive shaft.
- If the values is above 16 mm it will be necessary to insert one or more shims (2) under the lower nuts.
- If the value is below 10 mm it will be necessary to insert one or more shims (3) under the upper nut.
- Tighten the nuts (4) to the correct torque.

N.B. Each 0.5 mm shim will vary the value by ~ 3.5 mm.

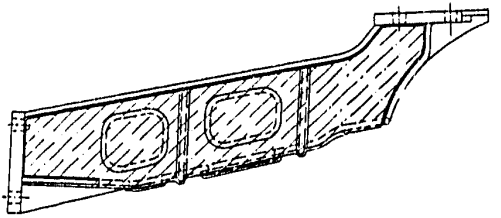

NOTE: Starting from chassis number 5822286, an off-loaded gear lever support has been fitted and the distance from the drive shaft need not be checked.

EXTERNAL GEAR SELECTOR LINKAGE (4x4)

REMOVAL - REFITTING (continued)

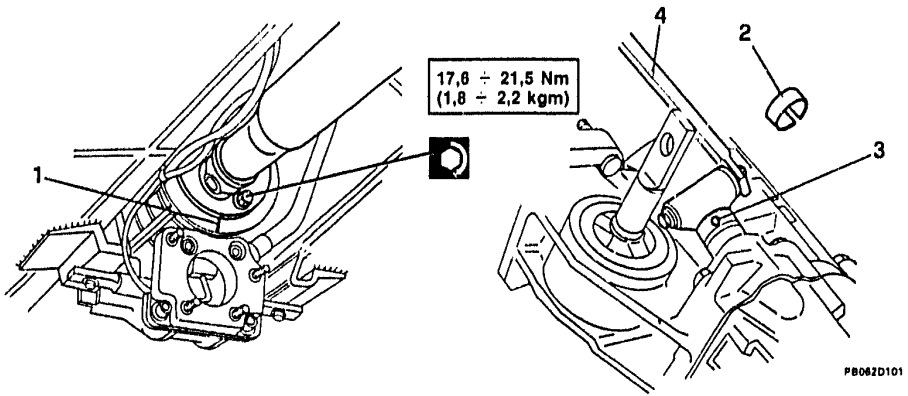

1. Scratch a reference mark on the front propellor shaft flange to ensure correct alignment when re-assembling, then remove the four electromagnetic coupling union bolts.
2. Remove the retaining clip.
3. Remove the pin.
4. Remove the gear lever.

DISASSEMBLY - REASSEMBLY

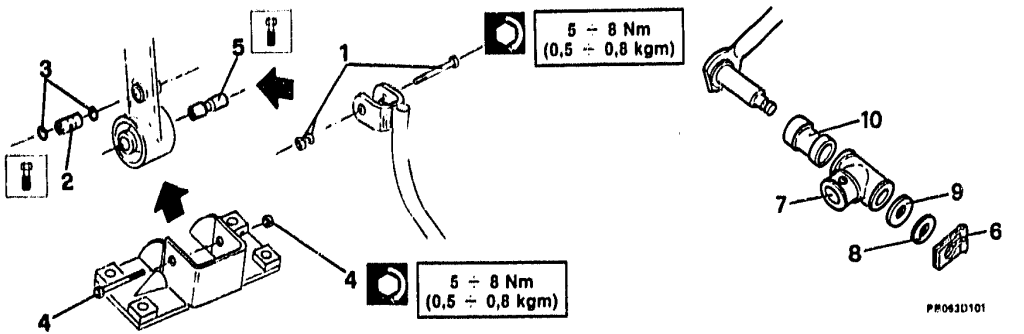

1. Remove the selector rod bolt, nut and washer.
2. Withdraw the bush.
3. Recover the O-rings.
4. Remove the gear lever bolt and nut from the bracket.
5. Take out the spacer.
6. Remove the retaining circlip.
7. Withdraw the flexible joint.
8. Recover the washer.
9. Recover the rubber washer.
10. Withdraw the anti-vibration bush.

- Clean metal components with solvent and check that all components are intact.

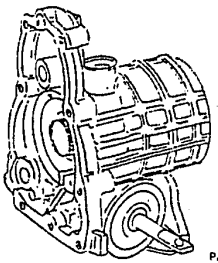

PA098D101

ELECTROMAGNETIC COUPLING

ELECTROMAGNETIC COUPLING

ASSEMBLY ..... 13 - 73
DESCRIPTION ..... 13 - 74
REMOVAL - REFITTING ..... 13 - 76
Preliminary engine bay operations ..... 13 - 76
Underbody components ..... 13 - 78
DISMANTLING ..... 13 - 82
Moving half ..... 13 - 87
CHECKS AND INSPECTIONS ..... 13 - 88

ELECTROMAGNETIC COUPLING
ASSEMBLY

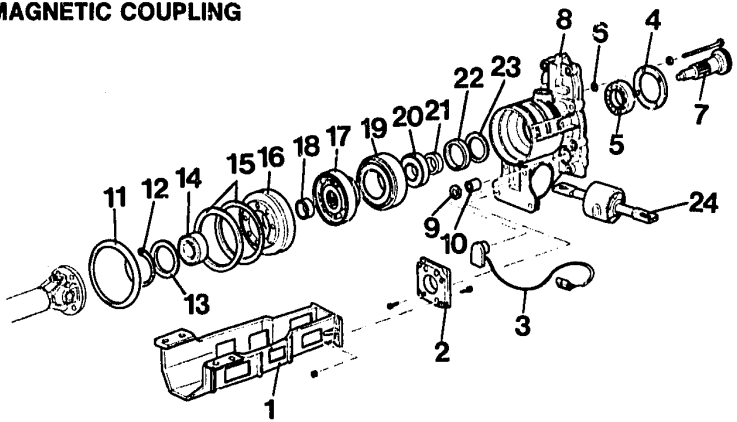

1. Cradle
2. Flexible mounting
3. Anti-seizing sensor complete
4. Bearing flange
5. Ball bearing
6. O-ring
7. Control shaft
8. Electromagnetic coupling casing
9. Seal
10. Selector rod bush
11. Teflon dust seal
12. Circlip
13. Adjusting shim washer
14. Self-lubricating bearing
15. Snap rings
16. Fixed coupling half
17. Mobile coupling half
18. Bush
19. Magnet
20. Self-lubricating bearing
21. Spacer
22. Oil seal
23. Cushioning washer
24. Flexible mounting

DESCRIPTION

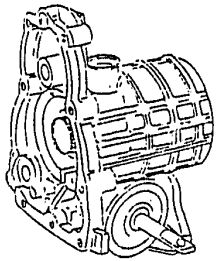

PB110D101

The new electronically engaged 4-wheel drive system consists of a rear differential connected to the engine-gearbox unit by means of a propellor shaft fitted with electromagnetic coupling, which is controlled by a special unit in the trunk. Engagement of 4-wheel drive can be accomplished at any speed by operating a button mounted in the central front seat divider over the transmission tunnel.

Thanks to a series of sensors, the system optimises operation and reliability in all conditions:
- preventing engagement when the front and back wheels are rotating at different speeds;
- disengaging 4-wheel drive during sharp braking, and re-engaging it as soon as the brake pedal is released.

The system features self-diagnosis and a light on the dashboard signals any faults in the control unit, electromagnetic coupling or sensors.
In fault conditions 4-wheel drive is automatically disangaged, meaning improved safety and reliability.

DESCRIPTION (continued)

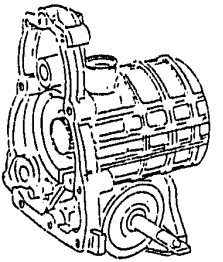

PB110D101

The system features a braking safety sequence: once it is enabled by two stop sensors, 4-wheel drive is automatically disangaged when deceleration exceeds 0.2g during braking. The drive is re-enagaged 0.4 seconds after the two stop switches are released.
The system also has an anti-seizing safety feature, based on sensing electromagnetic disturbance due to poor coupling engagement by means of a coil set close to the coupling.
This safety sequence comes into play either via a dashboard control or when the brake pedal is released following intervention of the protection system during deceleration. The safety system prevents engagement if 8 teeth are incorrectly engaged after 100 ms following the engagement signal.
Engagement is repeated every 0,6 s for a maximum of 16 times.
The system features self-diagnosis with Alfa-Tester diagnostic data transmission, capable of signalling the following faults:

- No tachometer signal
- No stop signal
- Seizing sensor coil open circuit
- Coupling winding in short or open circuit
- Power system fault

REMOVAL - REFITTING

Preliminary engine bay operations

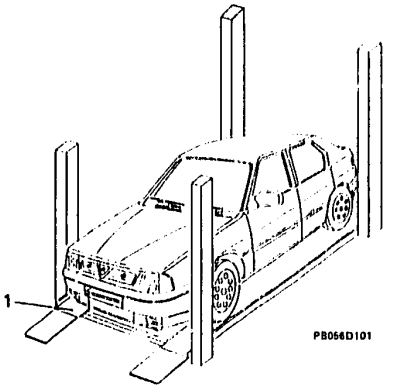

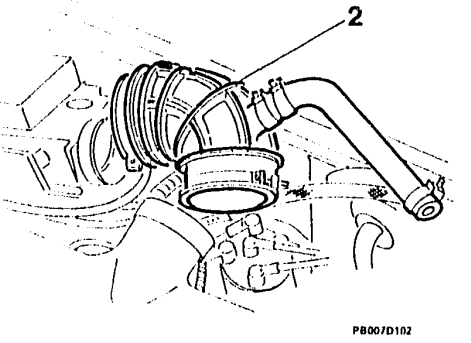

1. Position the vehicle on a hydraulic lift
   - Disconnect the battery negative lead.

2. Remove the corrugated hose piece between debimeter and air box compite with blow-by tube.



REMOVAL - REFITTING

Preliminary engine bay operations (continued)

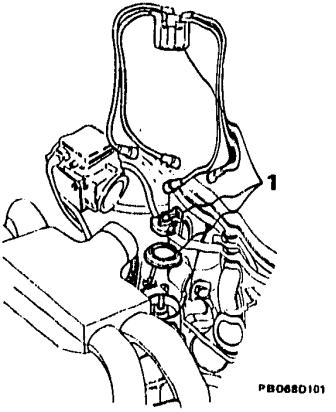

1. Remove the distributor cap complete with HT leads and wiper arm.

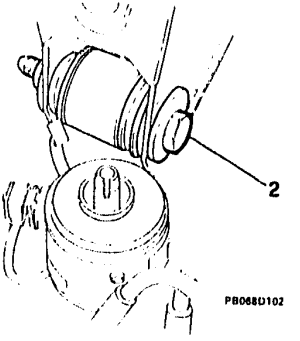

2. Slacken the central engine mounting bolt.

REMOVAL - REFITTING (continued)
Underbody components

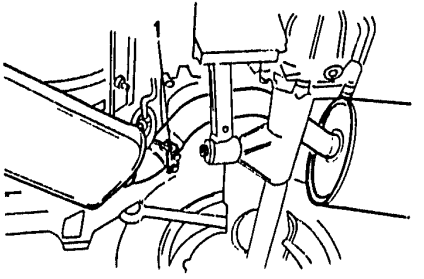

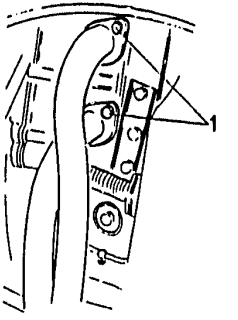

- Raise the vehicle.
1. Disconnect the exhaust pipe from the rear section and from the heads and remove it.

REMOVAL - REFITTING
Underbody components (continued)

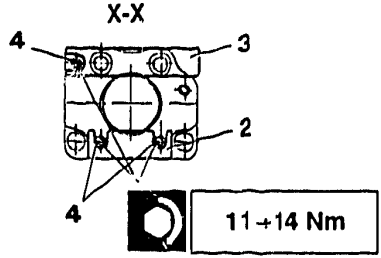

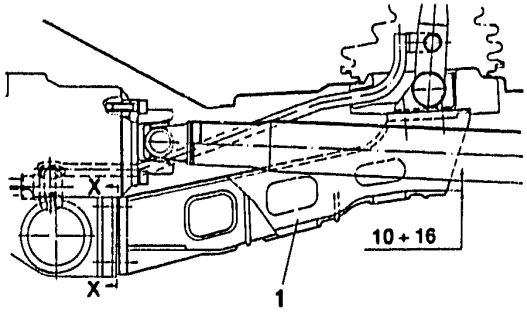

1. Remove the gear lever support (for 4x4 versions).
- When refitting the gear control lever it is necessary to check that it is the correct distance away from the drive shaft.

If it is not it is possible to operate as follows:
- Raise the vehicle.
- Check the distance between the support and the drive shaft.
- If the values is above 18 mm it will be necessary to insert one or more shims (2) under the lower nuts.
- If the value is below 10 mm it will be necessary to insert one or more shims (3) under the upper nut.
- Tighten the nuts (4) to the correct torque.

N.B. Each 0.5 mm shim will vary the value by ~ 3.5 mm.

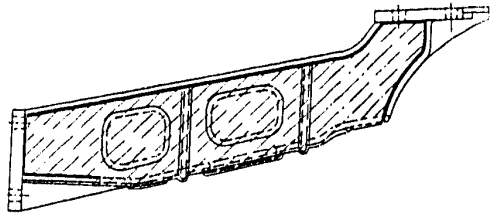

NOTE: Starting from chassis number 5822286, an off-loaded gear lever support has been fitted and the distance from the drive shaft need not be checked.

REMOVAL - REFITTING

Underbody components (continued)

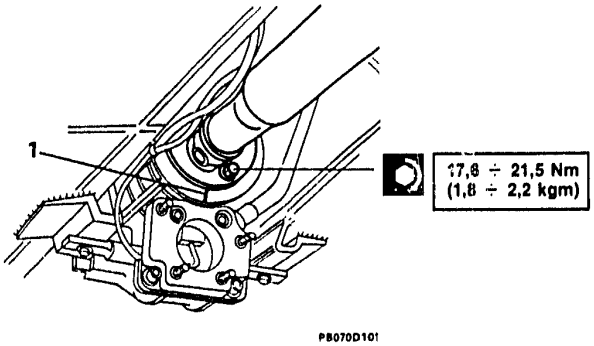

PB070D101

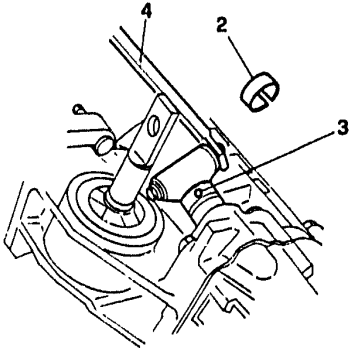

PB070D102

1. Scratch a reference mark on the front propellor shaft flange to ensure correct alignment when re-assembling, then remove the four electromagnetic coupling union bolts.
2. Remove the retaining clip.
3. Remove the pin.
4. Remove the gear lever.

- Disconnect the electromagnetic coupling lead, the anti-seizing sensor lead and the reverse gear switch lead.

⇩

REMOVAL - REFITTING

Underbody components (continued)

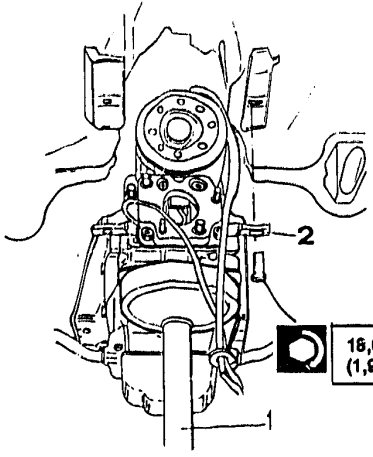

16,6 ÷ 23,5 N.m
(1,9 ÷ 2,4 kg.m)

1. Place a suitable column jack fitted with special support under the gearbox.
- Lift the engine-gearbox unit sufficiently to withdraw the central mounting bolt slackened previously.

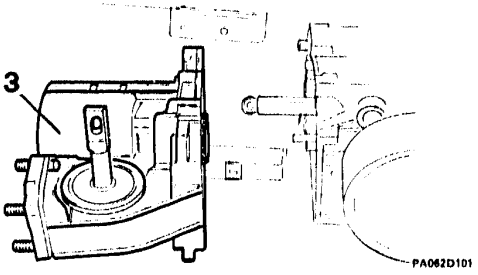

2. Remove the two rear mounting bolts.
- Lower the engine-gearbox unit sufficiently to allow removal of the rear gearbox cover complete with electromagnetic coupling.
3. Loosen the screws securing the gearbox rear cover and remove the electromagnetic coupling and gasket which must not be reused.

DISMANTLING

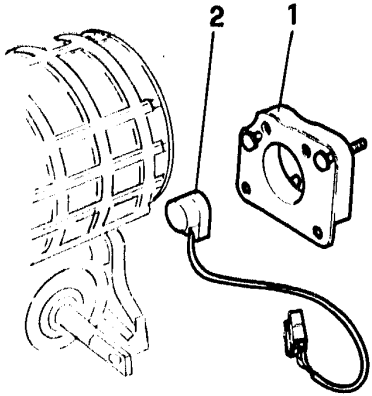

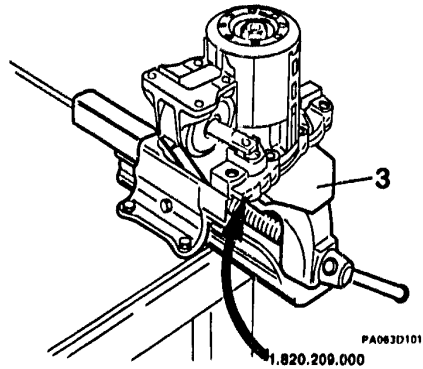

1. Working on the bench, remove the flexible mounting.
2. Pull the anti-seizing sensor out of its housing complete with cable.
3. Using tool No. 1.820.209.000 clamp the coupling in a vice.

DISMANTLING (continued)

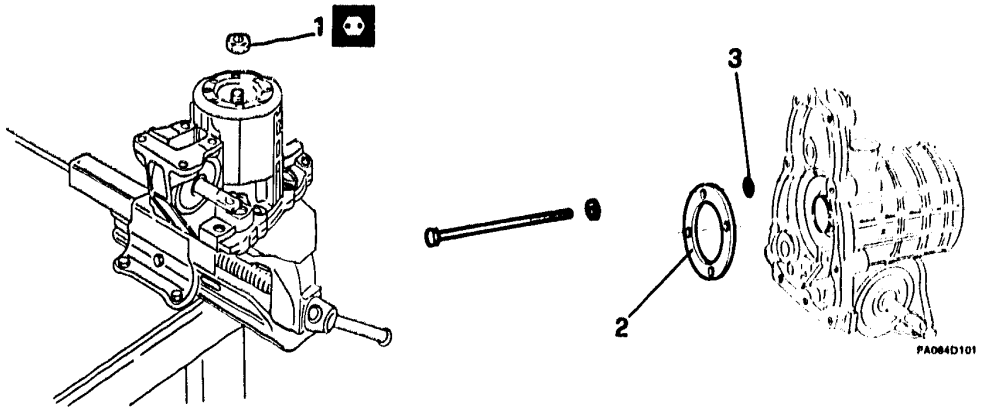

1. Open up the locking tab and remove the input shaft nut.
2. Working at the bench, remove the bearing flange with its fixing screws.
3. Recover the 4 O-rings.

DISMANTLING (continued)

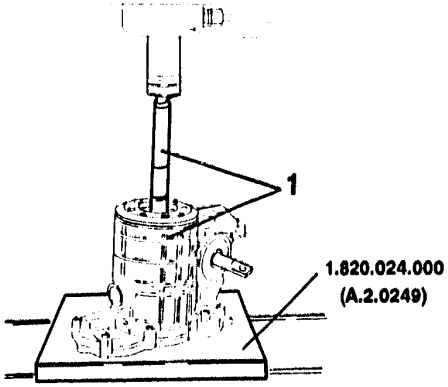

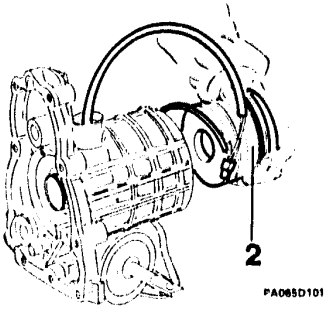

1. Position the electromagnetic coupling on a press fitted with baseplate No. 1.820.024.000 (A.2.0249), and using a suitable tool extract the input shaft and relative bearing.

2. Place the unit on the bench and pull out the electromagnetic coupling complete with cable.



DISMANTLING (continued)

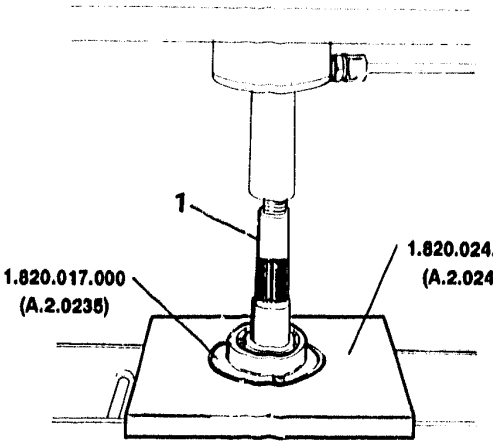

1. Set the input shaft on the table of a press fitted with baseplate No. 1.820.024.000 (A.2.0249) and half-washers No. 1.820.017.000 (A.2.0235), and extract the bearing.

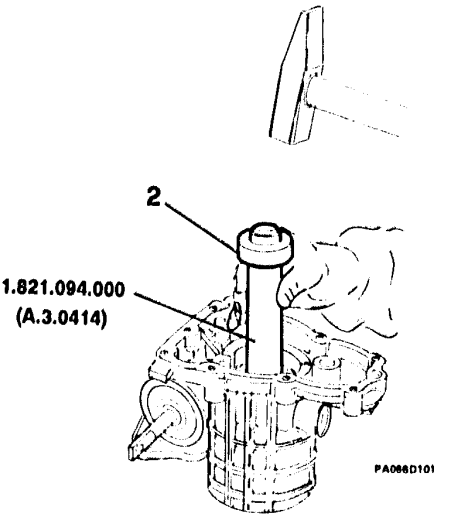

2. Place the gearbox rear cover on the bench, and using tool No. 1.821.094.000 (A.3.0414) extract the self-lubricating bearing and oil seal.

DISMANTLING (continued)

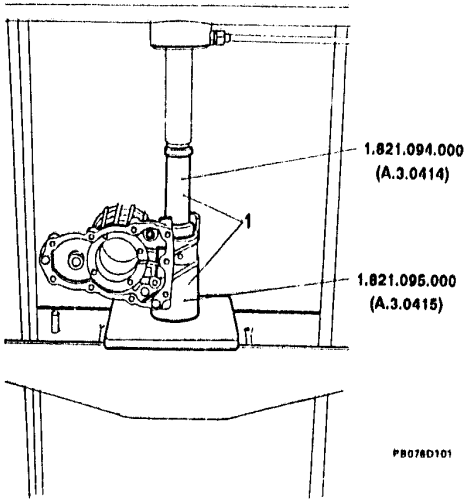

1. Set the rear gearbox cover on the press fitted with baseplate No. 1.821.095.000 (A.3.0415), and using tool No. 1.821.094.000 (A.3.0414) extract the rear flexible mounting assembly from its housing.

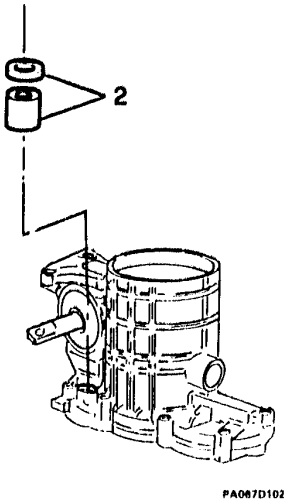

2. Remove the selector rod bearing keep ring, and if necessary, the respective bush.

DISMANTLING (continued)

Moving half

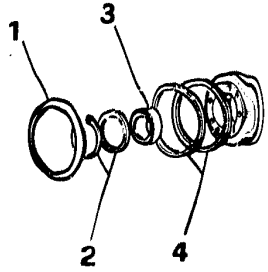

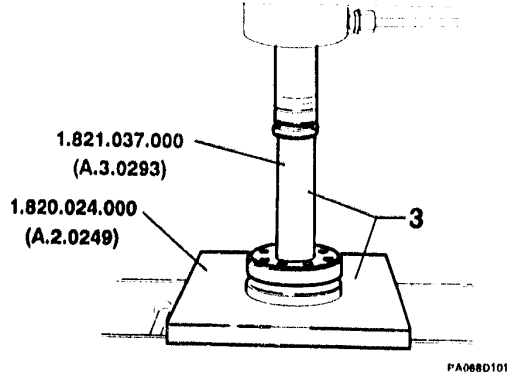

1. Remove the Teflon dust shield ring.
2. Remove the circlip and relative adjusting washer.
3. Set the coupling in a press fitted with baseplace No. 1.820.024.000 (A.2.0249), and using tool No. 1.821.037.000 (A.3.0293), extract the self-lubricating bearing.
4. Remove the two snap rings.

CHECKS AND INSPECTIONS

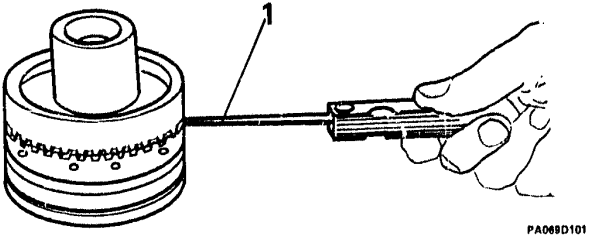

Play between coupling halves	≤ 0,3 mm

Carefully inspect all components and check their serviceability.

1. Uisng feeler gauges, check the play between fixed and mobile coupling halves.

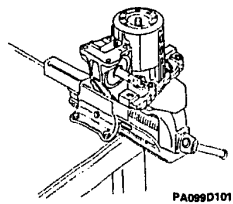
PA099D101

ELECTROMAGNETIC COUPLING (continued)

TECHNICAL SPECIFICATIONS AND NOTES

ELECTROMAGNETIC COUPLING

REASSEMBLY ..... 13 - 89

TECHNICAL SPECIFICATIONS AND NOTES

TRANSMISSION RATIOS ..... 13 - 95
FLUIDS AND LUBRICANTS ..... 13 - 98
SEALANTS AND FIXATIVES ..... 13 - 100
ROLLING TORQUES ..... 13 - 100
TIGHTENING TORQUES ..... 13 - 101
CHECKS AND ADJUSTMENTS ..... 13 - 103
Rear support ..... 13 - 103
Rods and forks ..... 13 - 103
Pinion ..... 13 - 104

ELECTROMAGNETIC COUPLING (CONTINUED)

REASSEMBLY

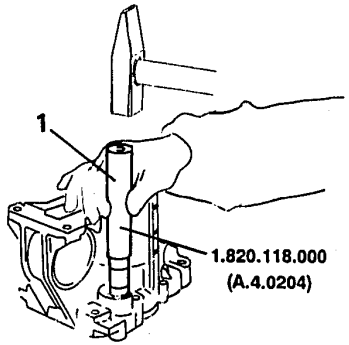

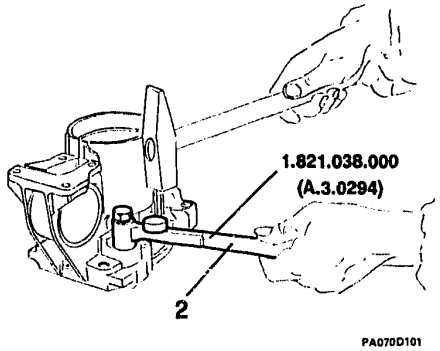

1. Working with the rear gearbox casing on the bench, using tool No. 1.820.118.000 (A.4.0204) insert the selector rod bush.

. Using tool No. 1.821.038.000(A.3.0294) insert the relative seal.

REASSEMBLY (continued)

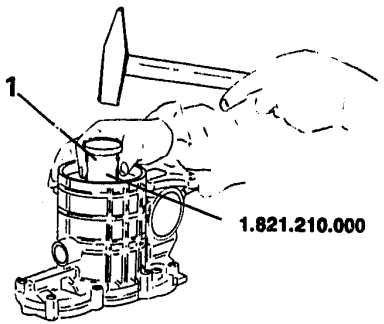

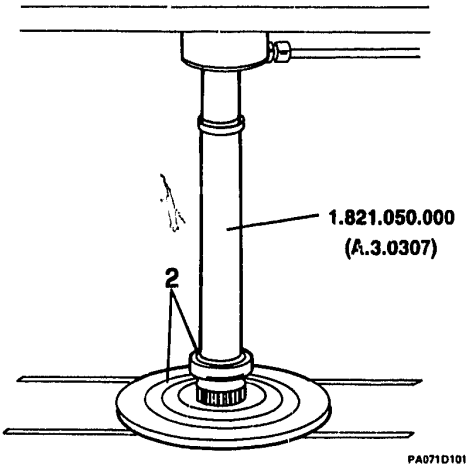

1. Insert the cushioning washer, and using tool No. 1.821.210.000, insert the oil seal.

2. Set the input shaft on the press fitted with special baseplate, and using tool No. 1.821.050.000 (A.3.0307), insert the bearing.



REASSEMBLY (CONTINUED)

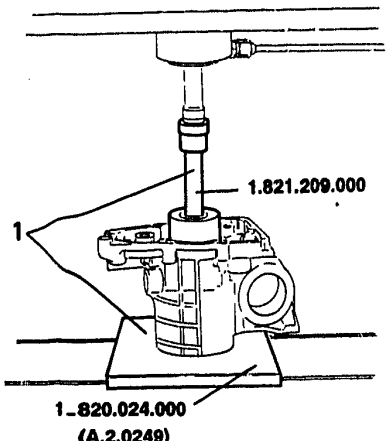

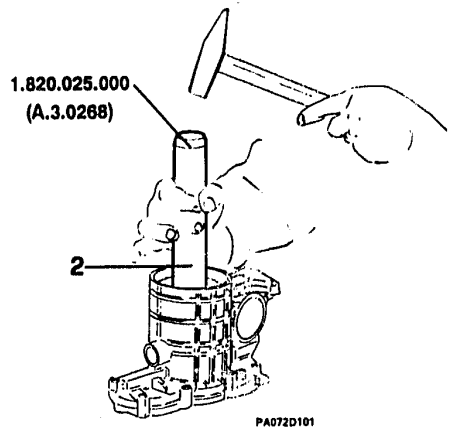

1. Set the gearbox rear cover on a press fitted with baseplate No. 1.820.024.000 (A.2.0249), and using tool No. 1.821.209.000, insert the input shaft complete with bearing.

2. Working on the bench, insert the oil seal spacer in the gearbox rear cover, and using tool No. 1.820.025.000 (A.3.0268), insert the self-lubricating bearing.

REASSEMBLY (continued)

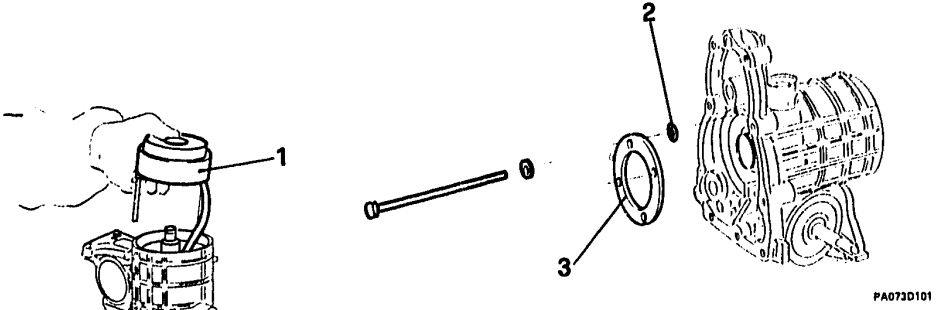

1. Screw the centering pins into the electromagnet and insert the assembly into the gearbox rear cover.
2. Place the 4 O-rings in their respective housings in the bearing flange.
3. Place the flange in posistion using the guide pins, and tighten down the screws to the specified torque.

REASSEMBLY (continued)

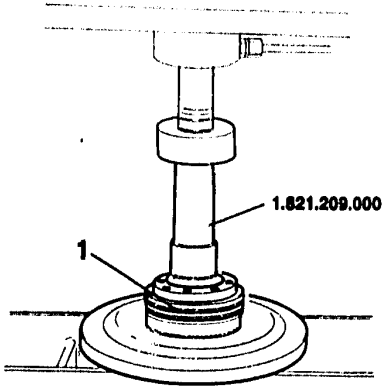

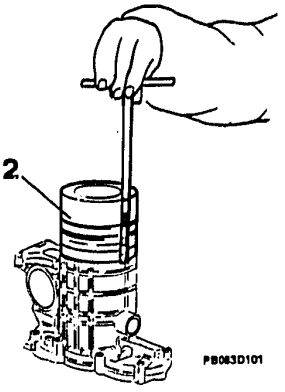

1. Set the mobile coupling half on a press, and using tool No. 1.821.209.000, insert the self-lubricating bearing.
- With the coupling on the bench, fit the spacer on the bearing and retain it with the snap ring. If there is any play, substitute the spacer with one of more suitable thickness (zero play).
- Complete the assembly inserting the two snap rings.
2. Insert the fixed half of the coupling in the gearbox rear cover, complete with relative spacer, and using the adjustable sleeve fit the mobile coupling half.

REASSEMBLY (continued)

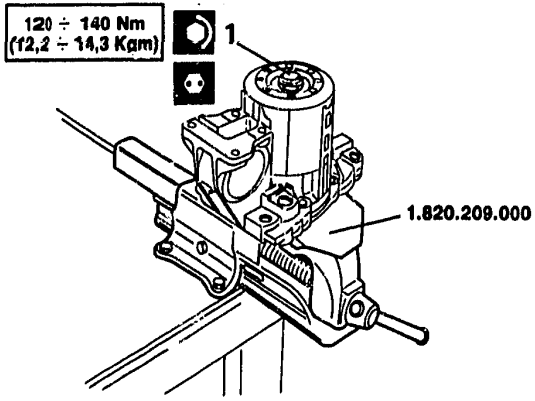

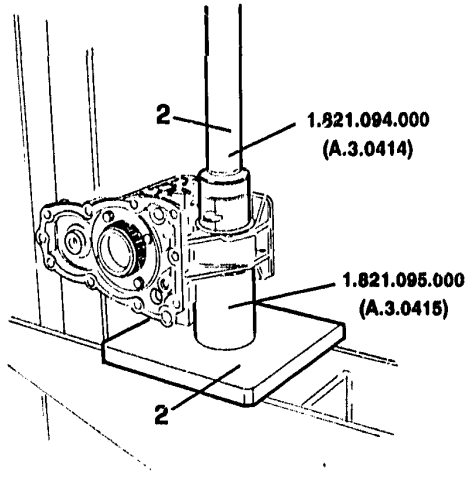

PA017C101

1. Clamp tool No. 1.820.209.000 in the vice, and slide in the front part of the complete coupling; fit the nut to the input shaft and tighten it to the specified torque.
   - Fold over the locking tab.
   - Mount the teflon dust sheild.
2. Set the complete coupling on the press fitted with special plate, and using tool No. 1.821.094.000 (A.3.0414) and baseplate No. 1.821.095.000 (A.3.0415), insert the rear flexibel engine mounting.
   - Insert the anti-seizing sensor, and fit the flexible mounting with the special hexagon-head screws.

TECHNICAL SPECIFICATIONS AND NOTES

TRANSMISSION RATIOS

Transmission ratio \ Model		33 - 33 1.3V - 33 1.3VL - 33 1.4IE - 33 1.3 IE (*) - 33 1.4IE (*) - 33 1.3 IE L (*) - 33 1.4IE L (*) - SW - SW 1.3L - SW 4x4 - SW 4x4 (1.5IE) - SW 1.3 IE (*) - SW 1.4IE (*) - SW 1.3 IE L (*) - SW 1.4IE L (*) - SW 1.3 IE 4x4 (*) - SW 1.4IE 4x4 (*)
Gearbox ratios	I	1:3,143
	II	1:1,864
	III	1:1,323
	IV	1:1,027
	V	1:0,854
	Reverse	1:3,091
Differential ratio		9/37
Overall gearbox - differential ratios (Nominal speed at 1000 r.p.m.)	I (km/h)	1:12,921 (8,010)
	II (km/h)	1:7,663 (13,506)
	III (km/h)	1:5,439 (19,029)
	IV (km/h)	1:4,222 (24,514)
	V (km/h)	1:3,511 (29,479)
	Reverse (km/h)	1:12,707 (8,145)

(*) I.A.W. INJECTION-IGNITION SYSTEM

TECHNICAL SPECIFICATIONS AND NOTES

TRANSMISSION RATIOS (Continued)

Transmission ratio \ Model		33 1.5 - 33 1.5IE - 33 1.7IE - 33 S 1.7IE - 33 1.7IE 4x4 - 33 BOXER 16V - 33 16V - 33 BOXER 16V Φ - 33 S 16V Φ - 33 S 16V Φ Permanent 4 - Sport Wagon (1.5IE) SW 1.7IE - SW 1.7IE 4x4 - SW B 16 - SW 16V
Gearbox ratios	I	1:3,143
	II	1:1,864
	III	1:1,323
	IV	1:1,027
	V	1:0,854
	Reverse	1:3,091
Differential ratio		9/35
Overall gearbox - differential ratios (Nominal speed at 1000 r.p.m.)	I (km/h)	1:12,220 (8,641)
	II (km/h)	1:7,247 (14,571)
	III (km/h)	1:5,144 (20,529)
	iV (km/h)	1:3,993 (26,446)
	V (km/h)	1:3,320 (31,807)
	Reverse (km/h)	1:12,018 (8,787)

TECHNICAL SPECIFICATIONS AND NOTES

TRANSMISSION RATIOS (Continued)

Transmission ratio / Model		33 TD Intercooler - SW TD Intrcooler
Gearbox ratios	I	1:3,545
	II	1:1,864
	III	1:1,323
	IV	1:1,027
	V	1:0,787
	Reverse	1:3,091
Differential ratio		11/35
Overall gearbox - differential ratios (Nominal speed at 1000 r.p.m.)	I (km/h)	1:11,280 (9,362)
	II (km/h)	1:5,931 (17,805)
	III (km/h)	1:4,210 (25,083)
	IV (km/h)	1:3,268 (32,313)
	V (km/h)	1:2,504 (42,172)
	Reverse (km/h)	1:9,835 (10,737)

FLUIDS AND LUBRICANTS

APPLICATION	TYPE	PRODUCT	QTY.
Pinion and differential taper roller bearings, outer races	GREASE	AGIP: F1 Grease 33 FD	-
Mating surfaces: - Differential shaft bearing retaining nut	OIL	AGIP ROTRA MP 80W/90 IP PONTIAX HD 80W/90 TUTELA W90/M-DA	-
Outer surfaces: - Selector rod to gear lever spacer - Fork lever mounting spacer Gear lever guide	GREASE	- AGIP: F1 Grease 15	5 g
Gearbox-differential refill	OIL	AGIP ROTRA MP 80W90 IP PONTIAX HD 80W90 TUTELA W90/M-DA	2,4 kg (2,6 l)
Differential bearing outer races and seats Bevel pinion shaft bush Main and pinion shaft gears	OIL	AGIP ROTRA MP 80W90 IP PONTIAX HD 80W90 TUTELA W90/M-DA	-



FLUIDS AND LUBRICANTS (continued)

APPLICATION	TYPE	PRODUCTS	QTY
Outer surfaces: - Gearbox rear mounting bush - Upper gear lever joint bush	GREASE	- UNION CARBIDE CHEMICALS COMPANY: Ucon lubricant 50 HB-5100 - MILLOIL: Lubricant for elastomer seals	-
Outer surfaces: - Gearbox rear mounting support bar	GREASE	- SPCA: Spagraoh - ISECO: Ergon Rubber Grease	-

SEALANTS AND FIXATIVES

APPLICATION	TYPE	PRODUCT	QTY
– Lower differential bearing retaining screws	MASTIC	DOW CORNING: Silastic RTV 732	–
– Selector fork retaining screws	MASTIC	Omnifit 150 H	–
N.B. For cleaning surfaces:	CATALYST	Omnifit	–
– Blanking plug housing inner surfaces	MASTIC	DIRING: Heldite	–

ROLLING TORQUES

COMPONENT \ UNITS	N.m	kg.dm
Dummy pinion		
– Re-used bearings	0,29 ÷ 0,59	0,3 ÷ 0,6
– New bearings	1,17 ÷ 1,47	1,2 ÷ 1,5
Pinion shaft complete with gears		
– Re-used bearings	0,39 ÷ 0,69	0,40 ÷ 0,7
– New bearings	1,27 ÷ 1,57	1,3 ÷ 1,6

TIGHTENING TORQUES

ITEM	UNIT OF MEASUREMENT	
	Nm	kgm
1st and 2nd gear lever retaining screws	25 ÷ 26	2,5 ÷ 2,7
Gear selector for retaining screws	21 ÷ 23	2,1 ÷ 2,3
Reverse gear shaft retaining screws	19 ÷ 24	1,9 ÷ 2,5
Gear lever fork pins on lever bracket	29 ÷ 34	3 ÷ 3,5
Primary shaft bearing outer race lock screws	69 ÷ 85	7 ÷ 8,7
Pinion shaft ring nut	220 ÷ 245	22,5 ÷ 25
Differential bearing support bolts (with specified locking compund)	39 ÷ 48	4 ÷ 4,9
Screw securing axle shaft to differential shaft	30 ÷ 35	3,1 ÷ 3,8
Reverse light to gearbox switch	40 ÷ 49	4,1 ÷ 5
Screws securing gearbox to engine unit	39 ÷ 48	4 ÷ 4,9
Screws securing gearbox rear support to body	18,6 ÷ 25,5	1,9 ÷ 2,4

TIGHTENING TORQUES (Continued)

ITEM	UNIT OF MEASUREMENT	
	Nm	kgm
Screws securing side supports to gearbox (•)	17,6 ÷ 22	1,8 ÷ 2,2
Nuts securing flexibile supports to gearbox side supports (•)	14,3 ÷ 18	1,5 ÷ 1,8
Bolts securing gearbox crossmember and transversal arm of suspension to body (•)	226 ÷ 275	23 ÷ 28
Propeller shaft flange screws (*)	17,6 ÷ 21,5	1,8 ÷ 2,2
Central propeller shaft support screws (*)	12 ÷ 14	1,2 ÷ 1,5
Gear lever mounting bolts (*)	5 ÷ 8	0,5 ÷ 0,8
Control shaft nut (*)	120 ÷ 140	12,2 ÷ 14,3

(•) Specific for TURBODIESEL versions
(*) Specific for 4x4 versions

CHECKS AND ADJUSTMENTS

Rear support

Orientation "ß" for rear gearbox mounting rubber bush

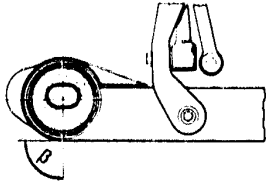

PA090D101

ß	degrees	90° ± 2°

Rods and forks

Gap "S" between 3rd and 4th gear selector rod (2) and 1st abd 2nd gear lever (1)

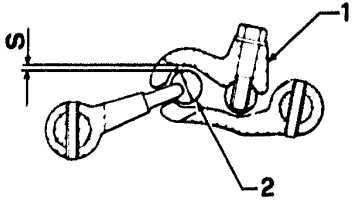

PA090D102

S	mm	1,4 ÷ 1,9

End play between selector forks and synchroniser sleeves

Play	mm	0,250 ÷ 0,375

CHECKS AND ADJUSTMENTS (CONTINUED)

Pinion

1. Thickness "S" for bevel pinion adjusting shims

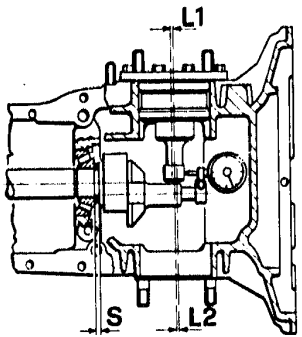

PA061D101

$$S = \frac{L_1 + L_2}{2} - (\pm C)$$

C = value inscribed on pinion

L_1 , L_2 = shift values against pinion

Thickness mm
0,75
0,85
0,90
0,95
1,00
1,05
1,10

SPECIAL TOOLS

SPECIAL TOOLS ..... 13 - 105

SPECIAL TOOLS

1.820.017.000 (A.2.0235)	Half washers for bearing extraction	 PA084D101
1.820.020.000 (A.2.0242)	Dial gauge for pinion shaft bearing pre-load	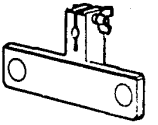 PA084U102
1.820.024.000 (A.2.0249)	Press baseplate for bearig extraction	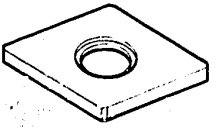 PA084D103
1.820.030.000 (A.2.0274)	Extension piece for fitting bearing pre--load test disk	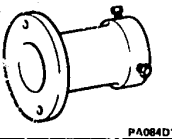 PA084D104

⇩

1.820.037.000 (A.2.0300)	Primary shaft locking tool	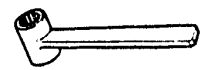
1.820.069.000 (A.2.0424)	Support for removing gearbox assembly only from vehicle (TURBODIESEL)	
1.820.106.000 (A.4.0136)	Dial gauge support for determining pinion position	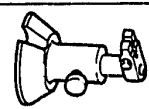
1.820.152.000 (C.5.0124)	Differential bearing pre-load test disk	
1.820.208.000	Column jack with support	
1.820.209.000	Torque flange	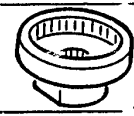

1.820.107.000 (A.4.0142)	Dummy pinion for generatrix calculation	 PA086D101
1.820.118.000 (A.4.0204)	Selector rod bearing fitting tool	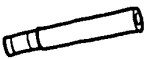 PA086D102
1.820.025.000 (A.3.0268)	Insertion tool for self-lubricating bearing	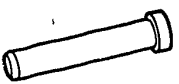 PA086D103
1.821.035.000 (A.3.0291)	Extractor tool for primary shaft bush and oil sheild and selector rod oil seal	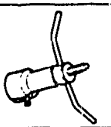 PA086D104
1.821.037.000 (A.3.0293)	Gear and bearing retaining nut insertion tool	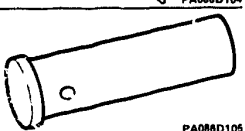 PA086D105

⇩

1.821.038.000 (A.3.0294)	Selector rod oil seal insertion tool (assembled unit)	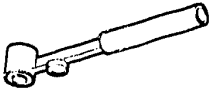 PA087D101
1.821.040.000 (A.3.0296)	Extraction - insertion tool for pinion shaft rear bearing outer race and pinion and primary shaft extraction	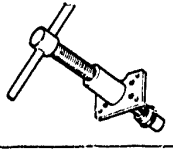 PA087D102
1.821.041.000 (A.3.0297)	Extraction - insertion tool for pinion shaft rear bearing external race	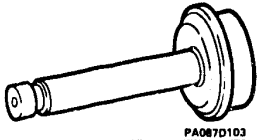 PA087D103
1.821.044.000 (A.3.0300)	Insertio tool for primary shaft and 5th gear pinion	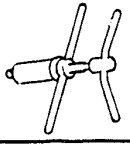 PA087D104

1.821.046.000 (A.3.0303)	Guide for fitting 3rd, 4th and reverse gear selector rod lock slugs	 PA068D101
1.821.047.000 (A.3.0304)	Guide for fitting 1st and 2nd gear selector rod lock slugs	 PA068D102
1.821.049.000 (A.3.0306)	Baseplate for extracting pinion shaft front bearing inner race	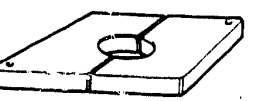 PA068D103
1.821.050.000 (A.3.0307)	Insertion tool for pinion shaft bearing inner race	 PA068D104

1.821.051.000 (A.3.0308)	Control shaft bush insertion tool	 PA089D101
1.621.052.000 (A.3.0309)	Selector rod slug insertion tool	 PA089D102
1.821.057.000 (A.3.0322)	Insertion - extraction tool for selector rod roll pins	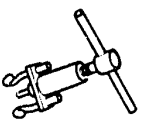 PA089D103
1.821.094.000 (A.3.0414)	Extractor tool for self-lubricating bearing and electromagnetic coupling oil seal. Rear engine flexible mounting assembly extraction tool	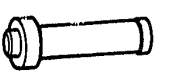 PA089D104

1.821.095.000 (A.3.0415)	Baseplate for rear engine flexible mounting extraction	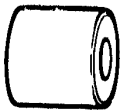 PA090D101
1.821.098.000 (A.3.0429)	Selector rod oil seal extraction tool	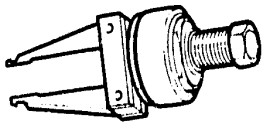 PA090D102
1.821.107.000 (A.3.0452)	Control shaft oil seal extraction tool (with unit assembled)	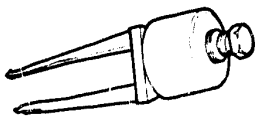 PA090D103
1.821.108.000 (A.3.0453)	Control shaft oil seal insertion tool (with unit assembled)	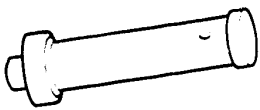 PA090D104

⇩

1.821.114.000 (A.3.0490)	4th gear pinion extracting tool	 PA091D101
1.821.115.000 (A.3.0491)	Extraction - insertion tool for primary shaft rear bearing	 PA091D102
1.821.116.000 (A.3.0492)	Auxiliary tool for extracting 4th gear pinion from primary shaft	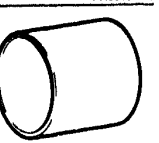 PA091D103
1.821.117.000 (A.3.0495)	5th gear pinion extractor tool	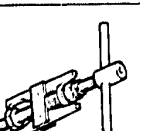 PA101D104

⇩

1.821.118.000 (A.3.0500)	Primary shaft rear bearing extraction tool	 PA092D101
1.821.209.000	Bearing insertion tool	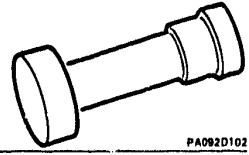 PA092D102
1.821.210.000	Oil seal fitting tool	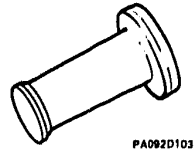 PA092D103

⇩

1.824.006.001 **(C.2.0037/0100)**	100 g weight for bearing pre-load test	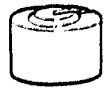 PA093D101
1.824.006.002 **(C.2.0037/0150)**	150 g weight for bearing pre-load test	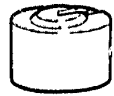 PA093D102
1.824.006.003 **(C.2.0037/0200)**	200 g weight for bearing pre-load test	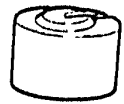 PA093D103
1.824.006.004 **(C.2.0037/0300)**	300 g weight for bearing pre-load test	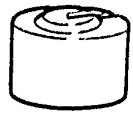 PA093D104

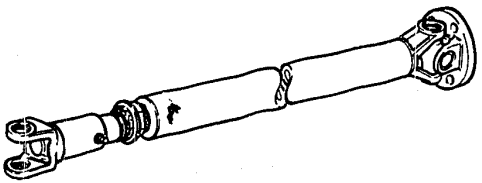

PROPELLOR SHAFT
(For selectable 4x4)

TSN

SPECIAL TOOLS

PROPELLOR SHAFT
(For selectable 4x4)

ASSEMBLY.....15 - 1
DESCRIPTION.....15 - 2
REMOVAL - REFITTING.....15 - 3
DISASSEMBLY.....15 - 9
CHECKS AND INSPECTIONS.....15 - 12
REASSEMBLY.....15 - 13

TECHNICAL SPECIFICATIONS AND NOTES

FLUIDS AND LUBRICANTS.....15 - 14
TIGHTENING TORQUES.....15 - 14
SPECIAL TOOLS.....15 - 15

PROPELLOR SHAFT (For selectable 4x4)

ASSEMBLY

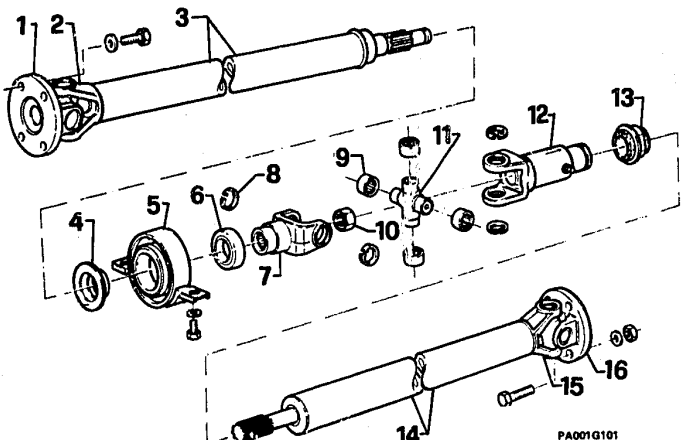

1 Front flange
2 Front universal yoke
3 Front shaft
4 Oil slinger
5 Central support
6 Ball-race bearing
7 Central yoke
8 Circlip
9 Needle bearing cap
10 Nut
11 Central trunnion
12 Central yoke
13 Seal
14 Rear shaft
15 Rear universal yoke
16 Rear flange

DESCRIPTION

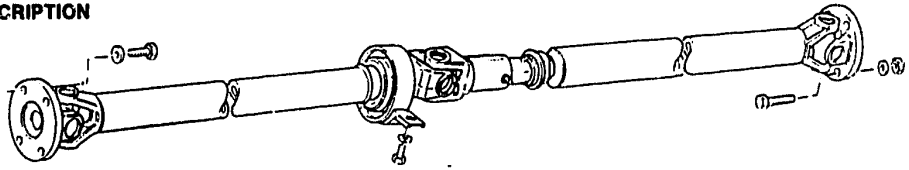

- Power transmission from the gearbox output shaft to the rear differential is achieved through a propellor shaft fitted with universal joints and yoke flanges at the ends. The shaft consists of two tubular sections linked by a central universal joint whose front yoke is fixed to the front shaft with a self-locking nut.
- The propellor shaft is fixed to the body by means of a central support fitted with sealed ball-race bearing. The bearing is protected by an oil-slinger cup located in front of it.
- The rear propellor shaft section takes up longitudinal movements due to shifts in the rear suspension by means of a splined coupling fitted with a grease nipple and seal.

REMOVAL - REFITTING

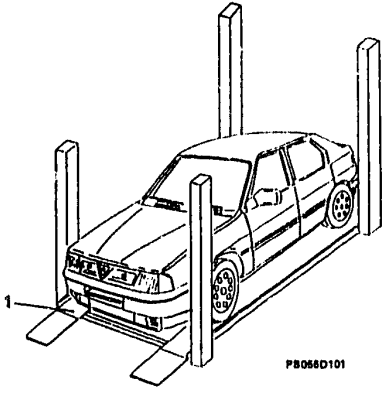

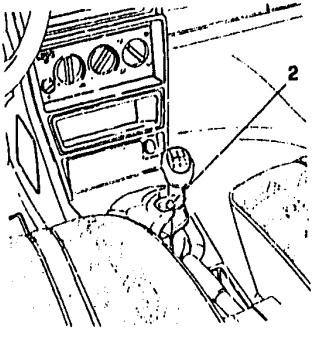

1. Set vehicle on lift.
- Disconnect negative battery terminal.

2. Working from inside vehicle, slide off gear lever knob.

REMOVAL - REFITTING (continued)

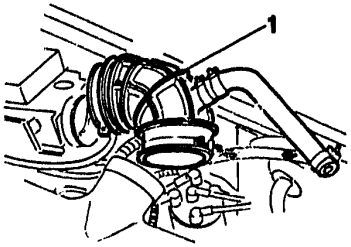

1. Remove corrugated sleeve.

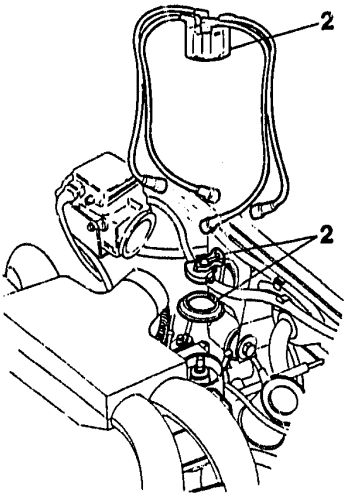

2. Remove distributor cap together with leads, and rotor.

REMOVAL - REFITTING (continued)

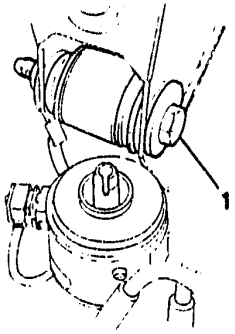

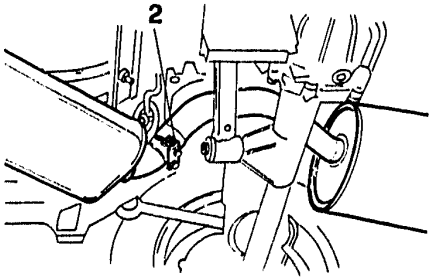

1. Loosen the bolt securing the engine central flexible support.
- Raise the vehicle.

2. Disconnect the exhaust pipe from the rear section.

REMOVAL - REFITTING (continued)

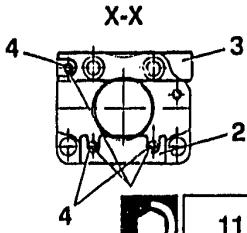

11 + 14 Nm

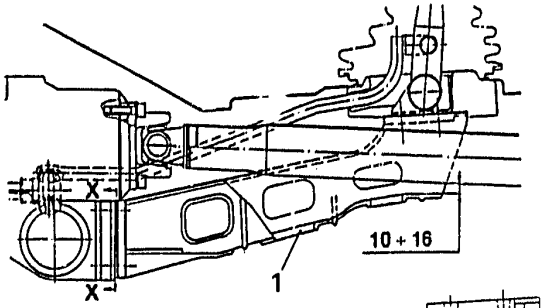

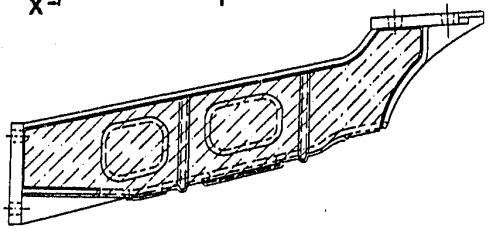

1. Remove the gear lever support (for 4x4 versions).
- When refitting the gear control lever it is necessary to check that it is the correct distance away from the drive shaft.

If it is not it is possible to operate as follows:

- Raise the vehicle.
- Check the distance between the support and the drive shaft.
- If the values is above 16 mm it will be necessary to insert one or more shims (2) under the lower nuts.
- If the value is below 10 mm it will be necessary to insert one or more shims (3) under the upper nut.
- Tighten the nuts (4) to the correct torque.

N.B. Each 0.5 mm shim will vary the value by ~ 3.5 mm.

NOTE: Starting from chassis number 5822286, an off-loaded gear lever support has been fitted and the distance from the drive shaft need not be checked.



REMOVAL - REFITTING (continued)

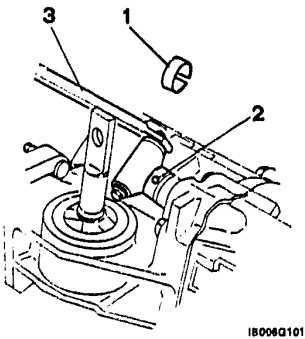

IB006G101

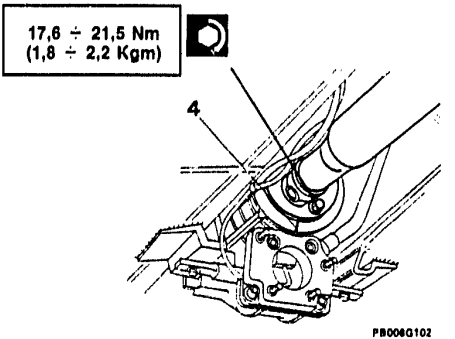

PB006G102

1. Remove the retaining clip.
2. Remove the pin.
3. Remove the gear lever.

4. Scratch a reference mark on the front propellor shaft flange to ensure correct alignment when re-assembling.

REMOVAL - REFITTING (continued)

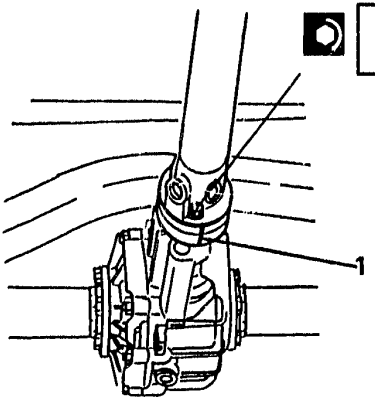

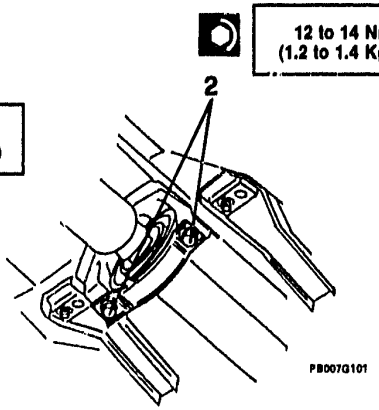

1. Make a reference mark on the propeller shaft rear attachment flange, to ensure correct reassembly.

2. Unscrew screws securing central bearing.
- Unscrew screws securing front and rear flanges, and remove propeller shaft.

DISASSEMBLY

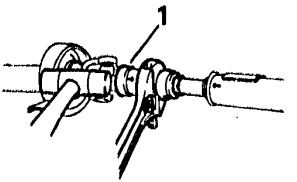

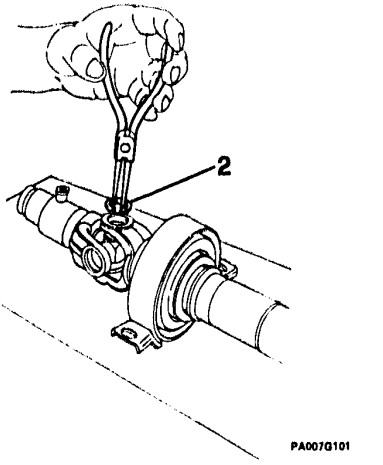

Before dismantling the universal joints, make sure that the trunnions and needle-bearing caps are available as spares. I they are not available, and the central support and/or bearing and/or oil slinger have to be replaced, the needle-bearing caps must be extracted from the trunnions with the utmost care.

1. Dismantle the rear propellor shaft section, sliding off the splined-coupling grease seal.
2. Extract diametrically opposed circlips from the rear universal yoke.

DISASSEMBLY (continued)

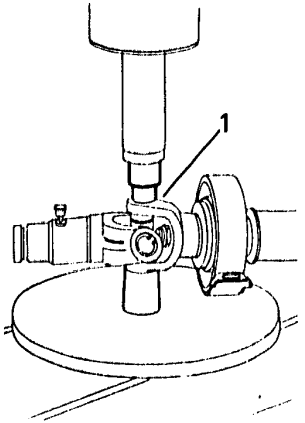

1. Using a press fitted with appropriate base and punch, extract the two needle-bearing caps from their seats and then remove the trunnion from the yokes.

Operate the press with great care, and stop the pressure as soon as the needle-bearing caps are free of their seats

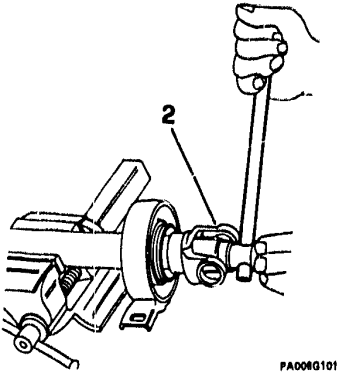

2. Set the propellor shaft in a vice, using protective jaw grips, and unscrew the central yoke retaining nut; remove the yoke.

The self-locking nut must not be re-used.

DISASSEMBLY (continued)

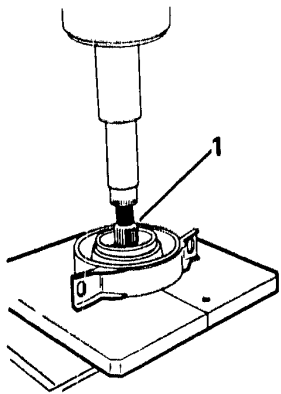

1. Using two half-washers that seat against the inner part of the central support, press free the support complete with bearing from the rear propellor shaft section.

Do not drop the propellor shaft on the ground

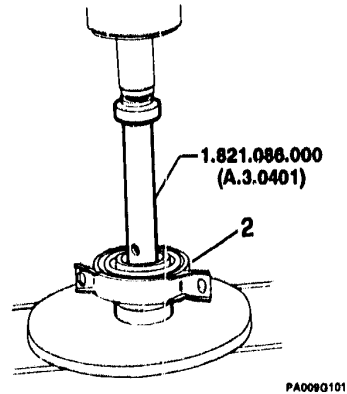

2. Using a suitable base, and extractor No. 1.821.086.000 (A.3.0401), withdraw the bearing from the central support.

- If necessary, finish dismantling the central universal and proceed with dismantling the front and rear joints as described above.

CHECKS AND INSPECTIONS

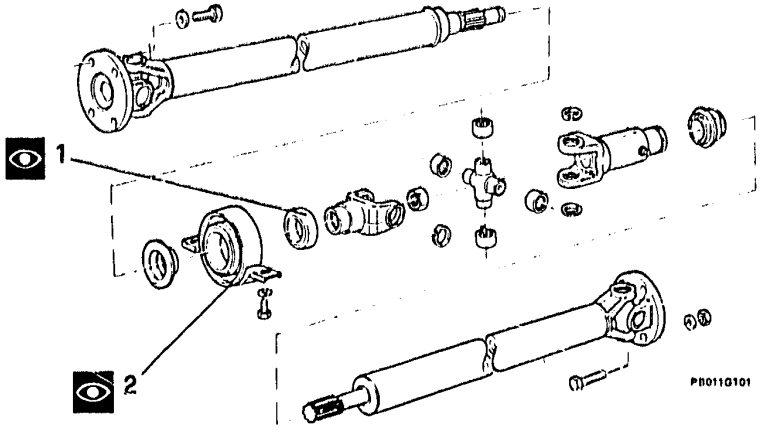

- Carefully clean the components and inspect them for surface defects.

1. Carefully inspect the central support bearing, rotating it slowly; if it is in good condition there should be no noises or catching. Also check the condition of the bearing sealing flanges.
2. Check the condition of the elastic element of the central support.

Replace all components considered unserviceable.

REASSEMBLY

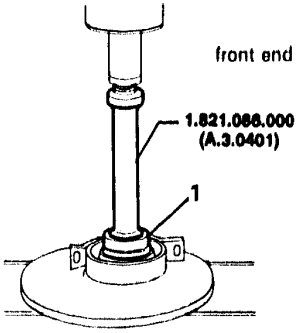

PA011G101

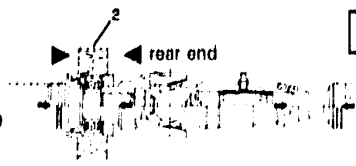

PA011G102

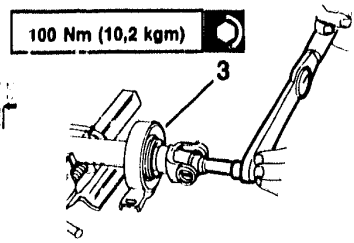

PA011G103

- Re-assemble the propellor shaft in the reverse order of dismantling, paying attention to te following.

1. Fit the bearing into the central support using a press and insertion tool No. 1.821.086.000 (A.3.0401).
2. The central support is fitted to the front shaft in the set position shown in the drawing.

- After re-assembly check that the four arrows stamped on the front and rear shafts are in alignment.

3. The new self-locking nut must be tightened with a torque wrench to the torque specified.

TECHNICAL SPECIFICATIONS AND NOTES

FLUIDS AND LUBRICANTS

Application	Type	Product
Sliding-spline coupling	GREASE	- IP Autogrease MP - AGIP Grease 15

TIGHTENING TORQUES

Component \ Units	N.m	kg.m
Front and rear shaft central fixing nuts	100	10,2
Propellor shaft union flange bolts, front and rear	17,6 ÷ 21,5	1,8 ÷ 2,2
Central support mounting bolts	12 ÷ 14	1,2 ÷ 1,5
Rear support studs for gearchange lever yoke	29 ÷ 34	3 ÷ 3,5

SPECIAL TOOLS

1.821.086.000 (A.3.0401)	Central support bearing insertion/extraction tool	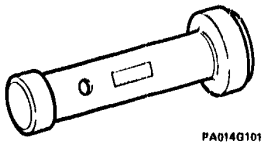 PA014G101

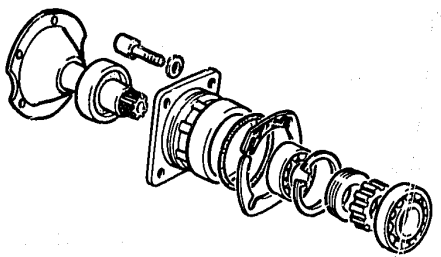

DIFFERENTIAL BEARINGS

DIFFERENTIAL CASING

DIFFERENTIAL BEARINGS

DIFFERENTIAL ASSEMBLY ..... 17 - 1
DISASSEMBLY ..... 17 - 2
CHECKS AND INSPECTIONS ..... 17 - 6
REASSEMBLY ..... 17 - 7

DIFFERENTIAL CASING

DISASSEMBLY ..... 17 - 9
CHECKS AND INSPECTIONS ..... 17 - 11
REASSEMBLY ..... 17 - 12
ADJUSTMENTS ..... 17 - 13
Pre-loading the differential bearings ..... 17 - 13
Pinion-crown wheel tooth play ..... 17 - 15

DIFFERENTIAL BEARINGS

DIFFERENTIAL ASSEMBLY

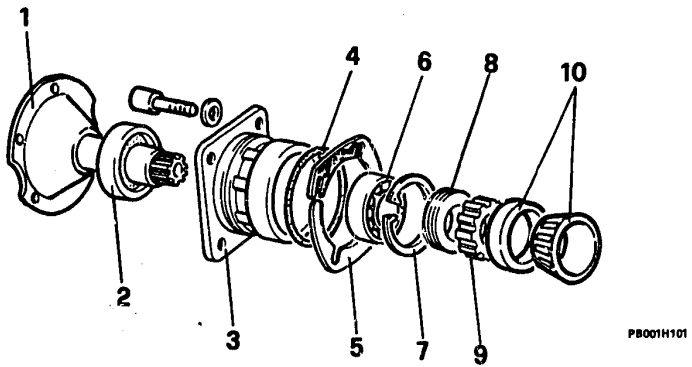

1. Differential shaft
2. Seal ring
3. Support
4. Seal ring
5. Adjustment
6. Ball bearing
7. Circlip
8. Ring nut
9. Phonic wheel
10. Taper roller bearing

DISASSEMBLY

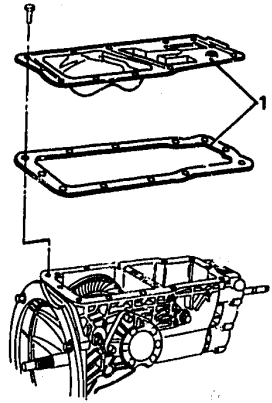

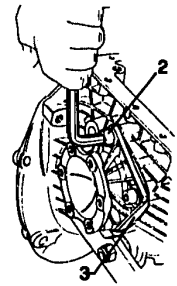

PB002H101

- Remove gearbox - differential assembly from engine (See **GR. 13**).

The following procedures refer to the RH differential bearing assembly.
The LH differential bearing assembly differs only in that it does not include the phonic wheel.

1. Remove oil sump along with its gasket seal.
2. Slacken off and remove the differential bearing support screws securing it to the gearbox.
3. Pull back the support and slide off the two shim washers .

- Disassemble support completely.

DISASSEMBLY (continued)

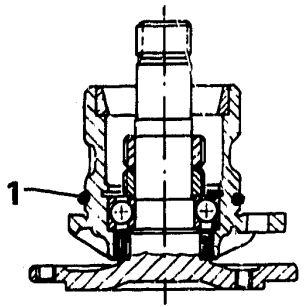

PA003H101

1. Remove the retaining clip from the differential support.

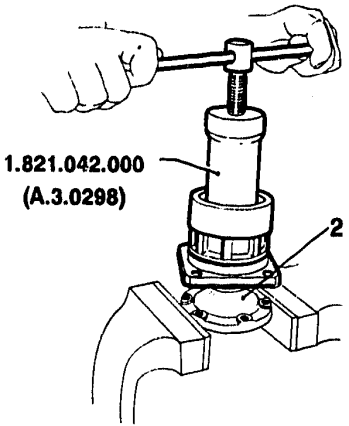

PA003H102

2. Clamp the differential shaft in a vice and extract the ring nut and sonic wheel using tool No. 1.821.042.000 (A.3.0298).

DISASSEMBLY (continued)

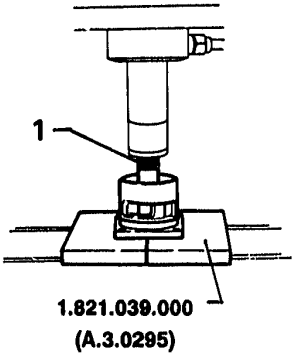

PA004H101

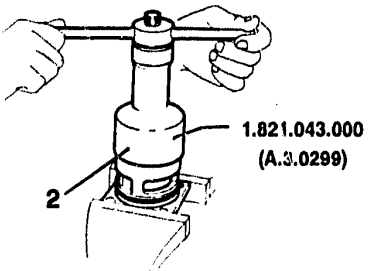

PA004H102

1. Extract the differentialò shaft from its support using a press and baseplates No. 1.821.039.000 (A.3.0295). Remove the oil seal.

2. Remove the differential taper roller bearing outer race using tool No. 1.821.043.000 (A.3.0299).



DISASSEMBLY (continued)

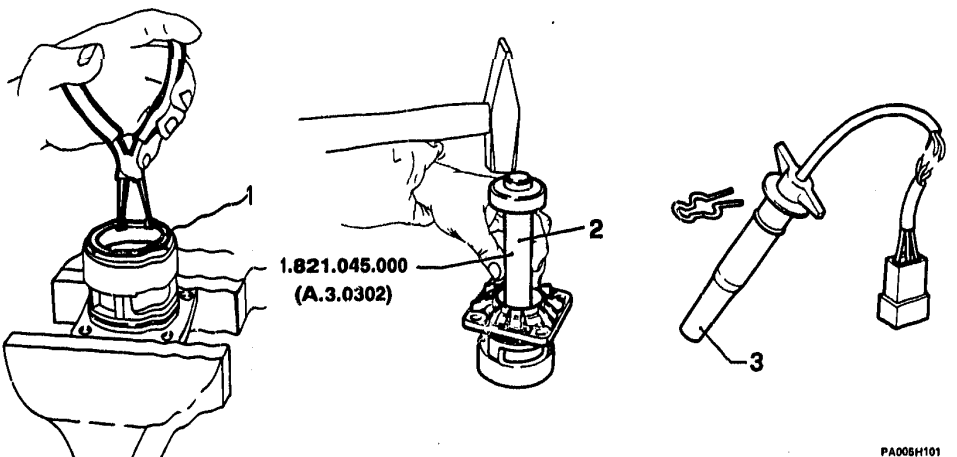

1. Remove the bearing retaining circlip from its seat in the differential bearing support.
2. Extract the ball bearing using tool No. 1.821.045.000 (A.3.0302).

- Using the same procedure, dismantle the LH differential support.

3. In the event of faults in the speedometer signalling system, remove the sensor from the gearbox, after having removed the retaining clip, and substitute it.

CHECKS AND INSPECTIONS

- Carefully clean the pieces and proceed as follows.

1. Closely examine the bearings while slowly rotating them; bearings in good condition should be free of vibrations, noise and any snagging.

- Inspect the outer races and revolving elements for ridges, marks and signs of abrasion due to the presence of foreign bodies.
- If irregular wear marks, scrapes, signs of seizure or overheating are found on the races or revolving elements, do not hesitate to replace them.

2. Make sure that differential splines show even wear over all their surfaces; if chipped or irregularly worn teeth are found, substitute the shafts and ensure that their mating components are not also damaged.

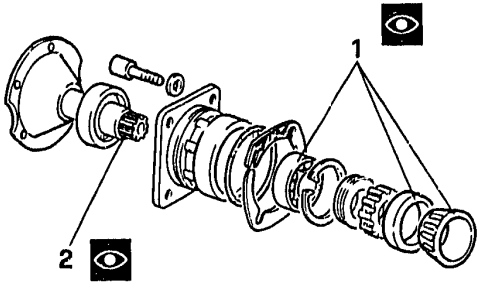

PB006H101

REASSEMBLY

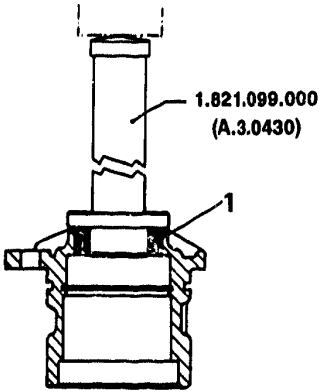

- Referring to the RH differential support, proceed as follows

1. Lubricate the outer surface of the oil seal and fit it into its seat in the differential bearing support using tool No. 1.821.099.000 (A.3.0430).

The arrow on the oil seal should point in the direction of shaft rotation.

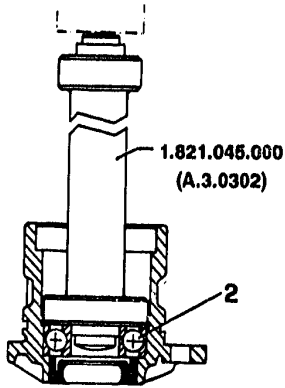

PA007H101

2. Fit the differential shaft bearing in the support using tool No. 1.821.045.000 (A.3.0302) with the help of a press.

- Fit the differential shaft bearing retaining circlip.

REASSEMBLY (continued)

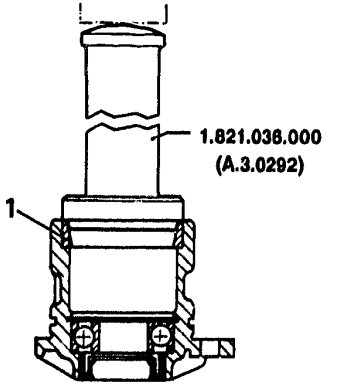

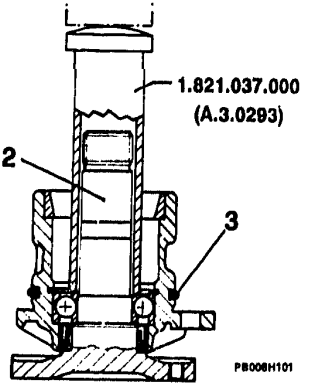

1. Fit outer shell of taper roller bearing, using tool N° 1.821.036.000 (A.3.0292).
2. Lubricate the internal surface of the oil seal and its seat on the differential shaft with gease (ISECO Molykote BR2). Fit differential shaft, using tool N° 1.821.037.000 (A.3.0293) and a press fitted with base-plate.

- Using gearbox oil, lubricate mating surfaces of a new bearing retaining ring nut.
- Fit first the ring nut then the phonic wheel on the differential shaft, using tool N° 1.821.037.000 (A.3.0293) and the press and base-plate.

3. Fit seal ring in channel of support, after lubricating it with gearbox oil.

- Fit the RH differential bearing support into its housing on the gearbox - differential casing. Likewise, refit the LH differential support.
- Refit oil sump and gasket.

DIFFERENTIAL CASING

DISASSEMBLY

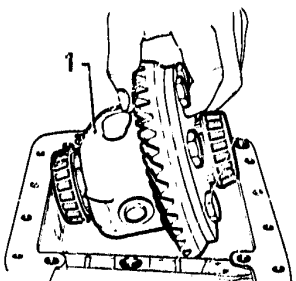

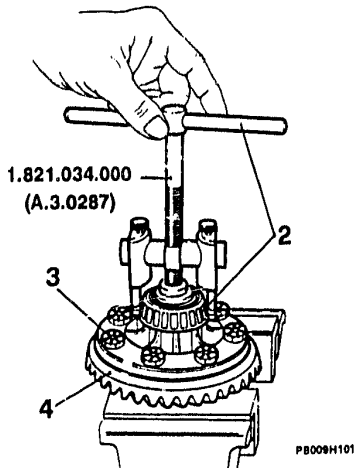

- Remove the RH and LH differential bearing supports

1. Remove the differential cage from the casing.
2. Remove the inner race of the taper roller bearings from the cage using tool No. 1.821.034.000 (A.3.0287).
3. Remove the bolts holding the crown wheel to the differential cage, complete with washers.
4. Remove the bevel crown wheel.

DISASSEMBLY (continued)

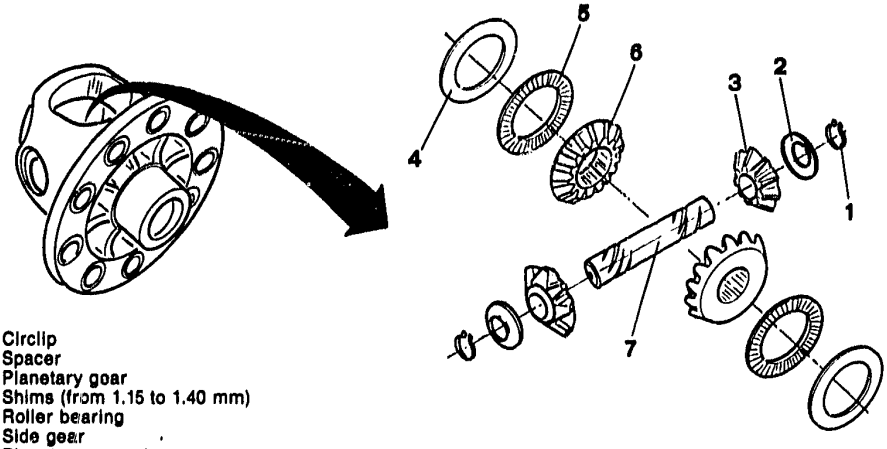

1. Circlip
2. Spacer
3. Planetary gear
4. Shims (from 1.15 to 1.40 mm)
5. Roller bearing
6. Side gear
7. Planetary gear pin

PB010H101

- Remove the two circlips (1) at the end of the planetary gear pin (7) and remove pin from differential cage.
- Recover all the components through the special holes in the differential cage.

CHECKS AND INSPECTIONS

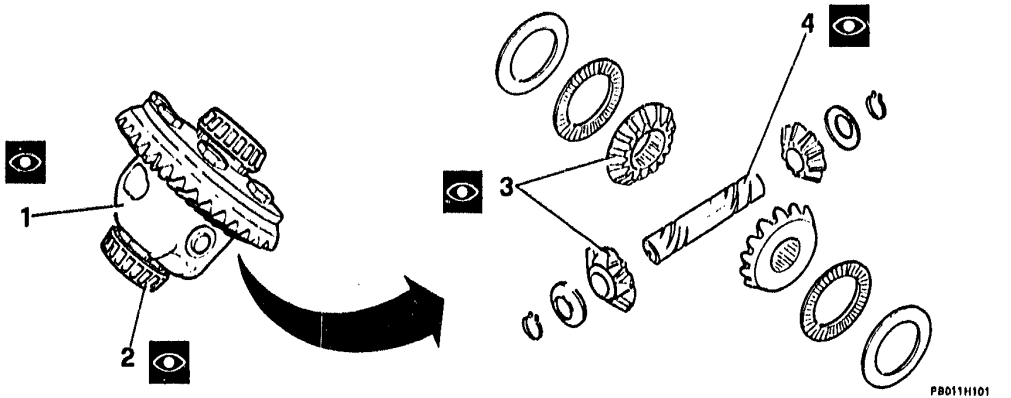

- Carefully clean the pieces and proceed as follows.

1. Inspect the differential cage for cracks or wear on the bearing surfaces: if present, substitute the unit.
2. Slowly ritate the bearings and ensure they are free of vibration, noise and snagging.
3. Inspect the surfaces of revolving elements and bearing tracks for irregular wear, signs of seizing or overheating: if present, substitute the parts.
4. Examine the satellite shaft and satellite and planetary gears for scrapes and signs of seizing, and make sure they operate over all their surface and that meshing is silent and snag-free.

REASSEMBLY

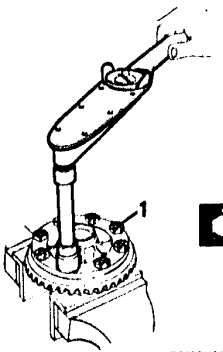

PA018H101

67 ÷ 74 Nm
(6,8 ÷ 7,5 Kgm)

- Re-assemble the bevel gears in the differential cage proceeding in the reverse order of removal.

1. Carefully clean the contact surfaces, and fit the crown wheel to the differential cage. Use only new specifically supplied bolts, which are treated with locking compound for first assembly. Working diametrically, tighten them to the specified torque.

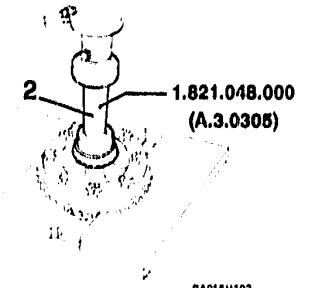

PA018H102

2. Fit the taper roller bearing inner races to the differential cage hubs, using tool No. 1.821.048.000 (A.3.0305), with the help of a press and baseplates.

Smear gearbox oil on the differential bearing supports. Introduce the differential cage into the gearbox casing, lining up the crown wheel with the bevel pinion and insert the above differential bearing supports.

- Fit the RH and LH differential bearing supports to the gearbox casing.

ADJUSTMENT

Pre-loading the differential bearings

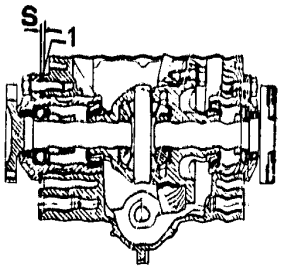

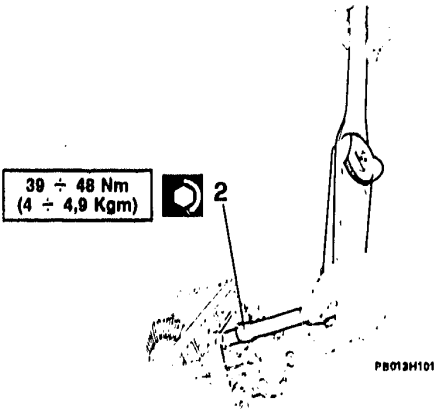

To pre-load the differential bearings, adhere scrupulously to the following procedure.

1. Fit a pair of sample 1,50 mm thick half-washers between the bearing support and gearbox on the side opposite the crown wheel, and screw in the support bolts.
2. Tighten the bolts to the specified torques, working diametrically.
- Screw in the support bolts on the crown wheel side by hand, eliminating play in the taper roller bearings without pre-loading them.

ADJUSTMENT

Pre-loading the differential bearings (continued)

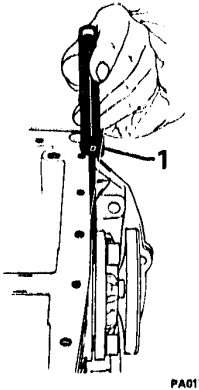

PA017H101

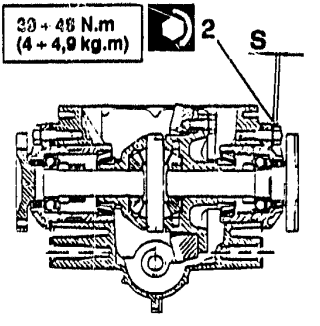

PB014H102

1. Using feeler gauges, measure the gap between gearbox and support flange in four equidistant places.
2. Take the average "Hm" of the four measurements, and using the formula below define the thickness of half-washer "S" to fit to the support on the crown wheel side in order to pre-load the bearings:
   S = Hm - 0,20
   where 0,20 is a correction factor for pre-loading the bearings.

- Considering that the tollerance allowed is ± 0,02 mm and the feeler gauges have 0,05 mm steps, select the nearest thickness to the calculated value.
- Fit the selected half-washers behind the bearing support on the crown wheel side, and tighten the bolts to the specified torques.

ADJUSTMENT (continued)

Pinion - crown wheel tooth play

backlash	0,08 ÷ 0,13 mm

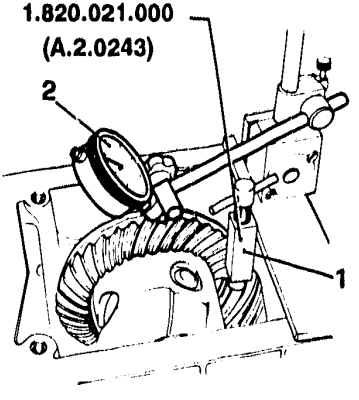

PA018H101

1. Rotate the crown wheel and pinion to settle the bearings, then prevent the pinion from rotating with tool No. 1.820.021.000 (A.2.0243), with its mounting bolts well tightened to the gearbox casing.
2. Apply a dial gauge (reading to hundredths of millimetres) on a magnetic base, and set the probe on the outer edge of a crown wheel tooth, perpendicular to the flank.

- Rock the crown wheel and measure the backlash on the dial indicator.
- Re-measure the four teeth and check that they are the same distance away from the gear.

ADJUSTMENT

Pinion - crown wheel tooth play (continued)

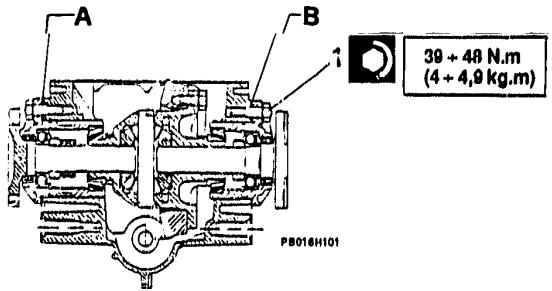

- If the backlash measured does not fall into the range shown, and bearing in mind that the total thickness of both sets of half-washers (A + B) between differential bearing supports and gearbox must remain constant to maintain bearing pre-load, proceed as follows:
- For insufficient backlash space the crown wheel further away from the pinion by reducing the thickness of half washers A and increasing the thickness of half-washers B by the same amount.
- For excessive backlash bring the crown wheel closer to the pinion by increasing the thickness of half-washers A and decresing the thickness of half-washers B by the same amount.

When correcting half-washer thickness, remember that in order to vary the dial indicator reading by 0,01 mm (crown wheel backlash), a thickness of 0,015 mm must be transferred from one side to another.

1. When the half-washers have been corrected, re-tighten the supports to the specified torque.

- Check the backlash again: if it is still incorrect, repeat the correction operation.
  If the unit is re-assembled without new components (bearing supports, differential cage, bearings and bevel gears), fit the original half-washers A and B, or new equivalents of the same thickness, respecting their original positions.

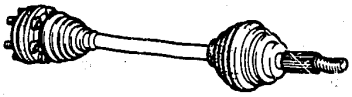

PB090H101

DRIVE SHAFTS

DRIVE SHAFTS

ASSEMBLY ..... 17 - 17
REMOVAL - REFITTING ..... 17 - 18
DISASSEMBLY ..... 17 - 20
CV joint, wheel side ..... 17 - 20
CV joint, engine side ..... 17 - 23
CHECKS AND INSPECTIONS ..... 17 - 26
REASSEMBLY ..... 17 - 27
CV joint, wheel side ..... 17 - 27
CV joint, engine side ..... 17 - 29

DRIVE SHAFTS

ASSEMBLY

1 Shaft
2 Nuto
3 Washer
4 Drive shaft
5 Washer
6 Circlip
7 Core
8 Cage
9 Ball
10 Clamp
11 Boot
12 Clamp
13 Clamp
14 Boot
15 Clamp
16 Inner cover
17 Seal ring
18 External ring
19 Core
20 Cage
21 Ball
22 Circlip
23 Outer cover
24 Plate

A CV joint, wheel side
B CV joint, engine side

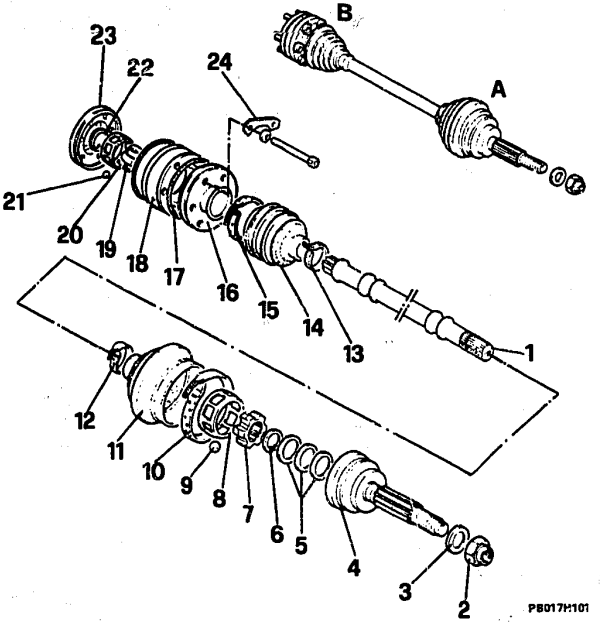

REMOVAL - REFITTING

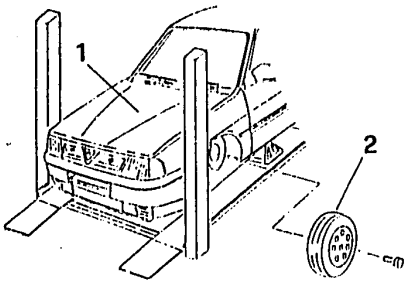

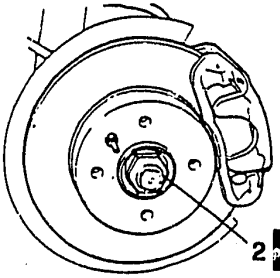

427,5 ÷ 472,5 N.m
(43,6 ÷ 48,2 kg.m)

1. Place the vehicle on the lift, lock the rear wheels and raise the front with a jack supporting it with safety stands placed under the resting areas.
2. Remove the wheel from the side on which you are working.
3. Remove the caulking from the wheel hub nut and unscrew it from the end of the drive shaft.

When refitting tighten the nut as follows:

a) Clean the thread of the joint.
b) Apply 3 or 4 drops of "Loctite 270" adhesive along the thread 4 - 6 mm from the end.
c) Tighten the nut within 5 minutes of applying the adhesive.
d) Caulk the collar of the nut at the site of the nick on the joint.
e) Wait at least 150 minutes before using the vehicle.

REMOVAL - REFITTING (continued)

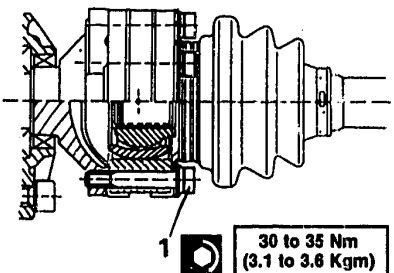

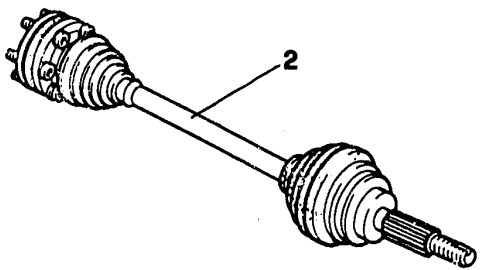

1. Remove CV joint from differentail shaft, loosening the six bolts.

2. Remove drive shaft complete with CV joints.

DISASSEMBLY

CV joint, wheel side

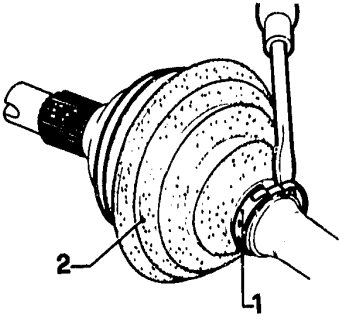

PA024H1101

The drive shaft assembly never requires lubrication and does not need to be further dismantled. In the event that components need replacing, proceed with dismantling as follows.

- Clamp the shaft in a vice with protective jaw grips.

1. Using a screwdriver, lever off the bellows retaining clips.
2. Pull back the rubber bellows so that the CV joint can be dismantled.

DISASSEMBLY

CV joint, wheel side (continued)

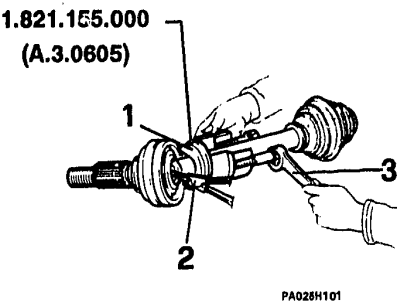

1. Fit tool No. 1.821.155.000 (A.3.0605) on the shaft and seat the fixed part against the shaft projections.
2. Using circlip pliers open the retaining circlip leaving it in its seat.
3. Tighten the forcing screws so as to bring the mobile part of the tool up against the core of the CV joint.

- Remove the circlip pliers and continue to tighten the screws until the CV joint is separated.
- Number the three washers that drop out of the joint at the same time.

DISASSEMBLY

CV joint, wheel side (continued)

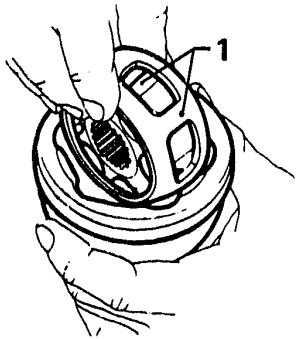

PA026H101

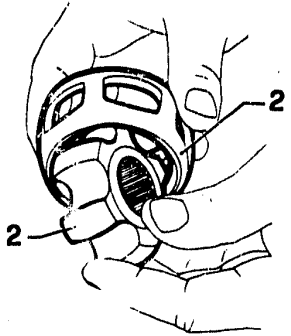

PA026H102

- Remove the circlip from the joint and withdraw the rubber gaiter from the drive shaft.
- Scratch reference marks on the core, cage and CV joint housing for re-assembly purposes.
- Turn the core and cage in the housing to extract the balls.

1. Orientate the core and cage in the housing so as to extract them.
2. Separate the core from the cage.

DISASSEMBLY(Continued)

CV joint, engine side

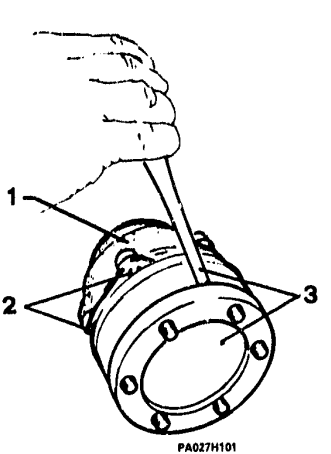

PA027H101

- Clamp the drive shaft in a vice fitted with protective jaw grips.
- Using a screwdriver, lever off the gaiter retaining clips.

. Pull back the rubber gaiter.

2. Remove the screws and the three plates on the inner cover side.
3. Using a pin-punch, remove the outer cover from the joint.

DISASSEMBLY
CV joint, engine side (continued)

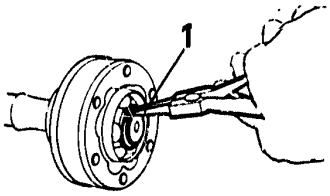

PA028H101

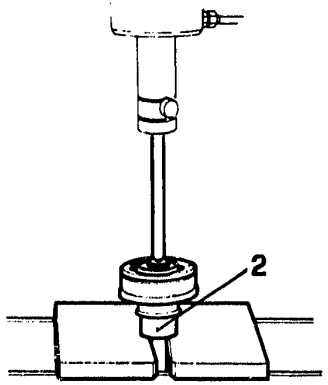

PA028H102

- Scribe a reference mark on the Cv joint housing, nucleus and cage for re-assembly purposes.

1. Remove the retaining circlip using circlip pliers.

2. Using a press, baseplates and a suitable mandrel, extract the CV joint from the housing.



DISASSEMBLY

CV joint, engine side (continued)

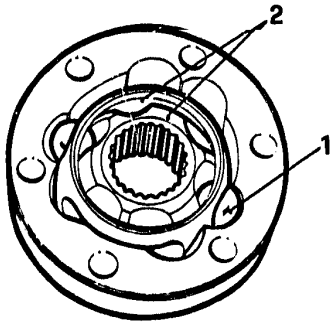

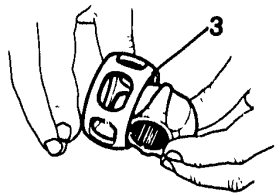

PA029H101

- Pull the rubber gaiter off the shaft and remove the inner cover from the CV joint.
- Remove the two seals from the CV joint outer ring.

1. Remove the balls from the joint.
2. Remove the nucleus and cage by orientating them correctly in the outer ring.
3. Separate the nucleus from the cage.

CHECKS AND INSPECTIONS

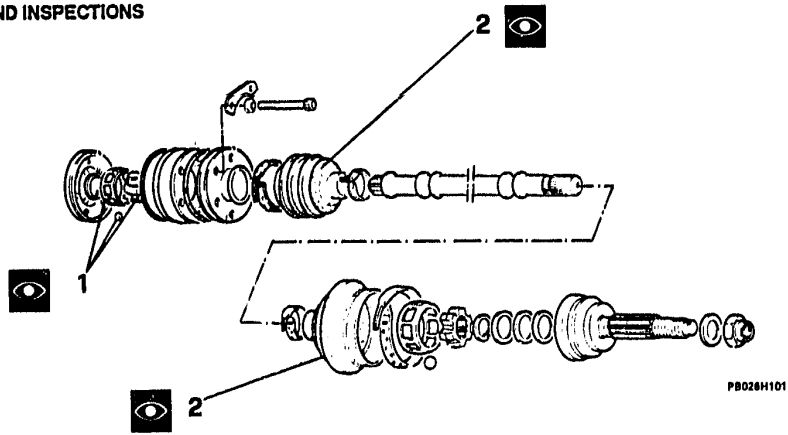

- Thoroughly clean and wash with suitable equipment the joint components.

1. Check that working surfaces and balls have no cuts or signs of abrasion due to foreign bodies; if necessary, replace joint.
2. The splitting of gaiters causes leakage of grease and entry of materials which lead to faulty functioning of CV joints; this shows up normally during road testing. It is better to replace them when the joint is disassembled.

- Further check that the two joints do not present excessive backlash such as to cause noise on abruptly changing driving direction. This kind of fault shows up as knocking during road testing.

REASSEMBLY

CV joint, wheel side

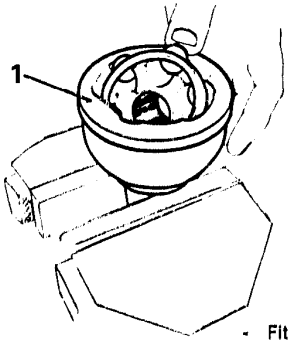

PA031H101

- Re-assemble the joint components in the same positions as they were before dismantling, following the points below.
- Carefully grease the cage, nucleus and balls with the specified grease, and refill the joint with 40 g of the same grease.

	Molykote VN 2461C **Optimal Oilstamoly 2 LN 584**

- Fit the rubber gaiter to the drive shaft, taking care not to damage it on te splines, which can be taped to avoid this.
- Fit the circlip in its seat in the nucleus.

Ensure that the circlip seats properly in the shaft.

- Fit the nucleus and cage in the reverse order of dismantling.

The nucleus must be fitted with its face (where the circlip is seated) towards the outside of the joint.

1. Insert the balls.

Do not mix the balls with those from the engine-side CV joint, which have different diameters.

REASSEMBLY

CV joint, wheel side (continued)

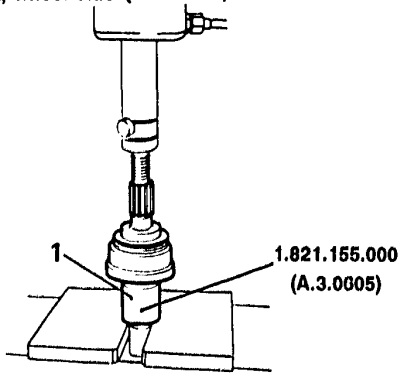

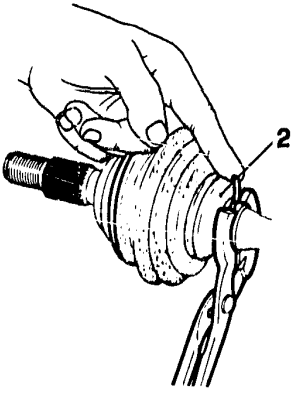

PA032H101

- Fit the washers to the wheel-side of the drive shaft in the same order with which they were removed.

1. Fit the CV joint together using a press with baseplates and tool No. 1.821.155.000 (A.3.0605).

- Grease the coupling with a further 40 g of the specified grease and ensure that the balls are completely covered.

2. Fit the gaiter to the joint, fit the new retaining clips and tighten them up with pliers taking care not to cut eh gaiter.

REASSEMBLY (continued)

CV joint, engine side

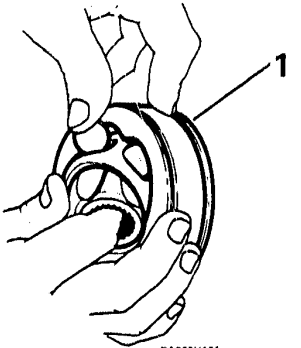

PA033H101

- Carefully clean the cage, the core and the balls with the specified grease and refill the inner chamber of the coupling with 40 g of the specified grease.

Molykote 2461 C
Optimol Oilstamoly 2LN 584

- Fit the gaiter to the drive shaft, taking care not to damage it on the splines, which can be taped to avoid this.
- Fit the nucleus and cage in the reverse order of dismantling.

1. Fit the balls as shown in the drawing, and make sure the joint operates properly.

Do not mix the balls with those from the hub-side joint which have different diameters.

REASSEMBLY

CV joint, engine side (continued)

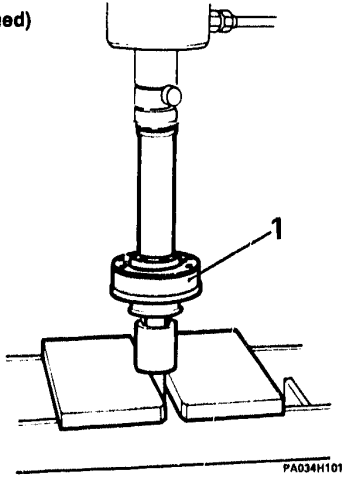

1. Insert the inner joint cover and fit the joint to the drive shaft using a press with baseplate, half plates and mandrel.

- Fill up the joint with 40 g of specified grease, well distributed around the parts.
- Fit the two seals to the joint outer ring.
- Working in the reverse order of dismantling:
  fit the gaiter. Fit the new retaining clips and tighten them up with pliers so as not to cut the gaiter
  fit the three plates on the joint inner cover, driving in the relative screws with washers, then fit the outer cover on the screws.

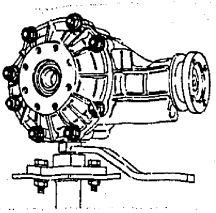

4x4

REAR DIFFERENTIAL

REAR DIFFERENTIAL

ASSEMBLY.....17 - 31
DISASSEMBLY.....17 - 33
CHECKS AND INSPECTIONS.....17 - 40

REAR DIFFERENTIAL

ASSEMBLY

1. Differential casing.
2. Oil filler plug.
3. Oil dria plug.
4. Spacer
5. Shim washer.
6. Pinion shaft front taper roller bearing outer shell.
7. Pinion shaft front taper roller bearing inner shell.
8. Oil seal.
9. Flange
10. Ring nut.
11. Pinion shaft rear taper roller bearing outer shell.
12. Pinion shaft rear taper roller bearing inner shell.
13. Shim washer.
14. Pinion shaft.

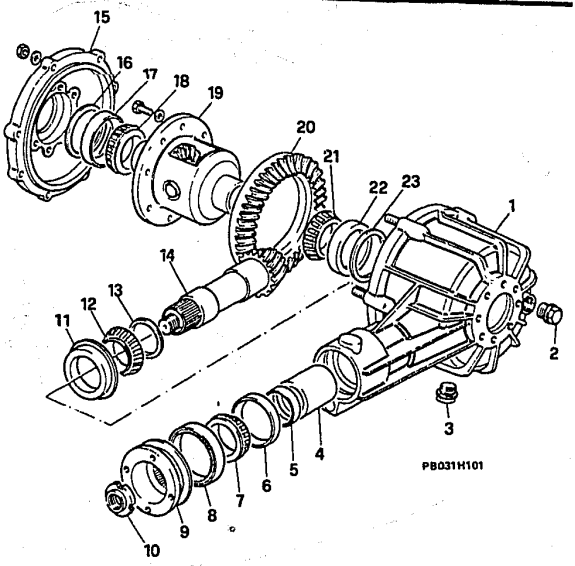

REAR DIFFERENTIAL

ASSEMBLY (continued)

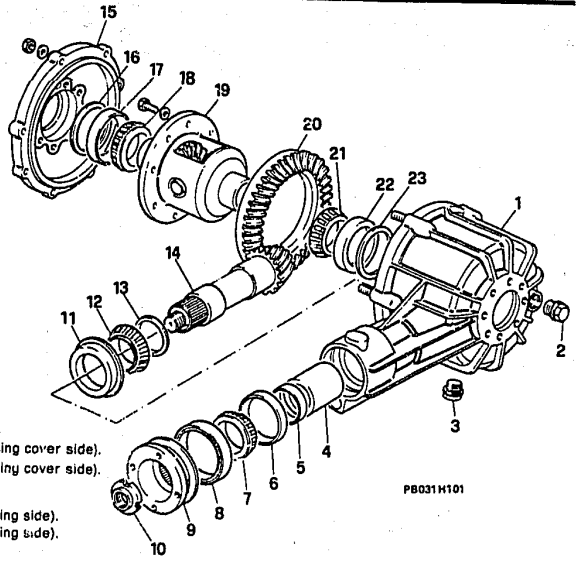

15. Differential casing cover.
16. Shim washer.
17. Differential cage taper roller bearing outer shell (differential casing cover side).
18. Differential cage taper roller bearing inner shell (differential casing cover side).
19. Differential cage.
20. Bevel crown wheel.
21. Differential cage taper roller bearing inner shell (differential casing side).
22. Differential cage taper roller bearing outer shell (differential casing side).
23. Shim washer.

REAR DIFFERENTIAL (continued)

DISASSEMBLY

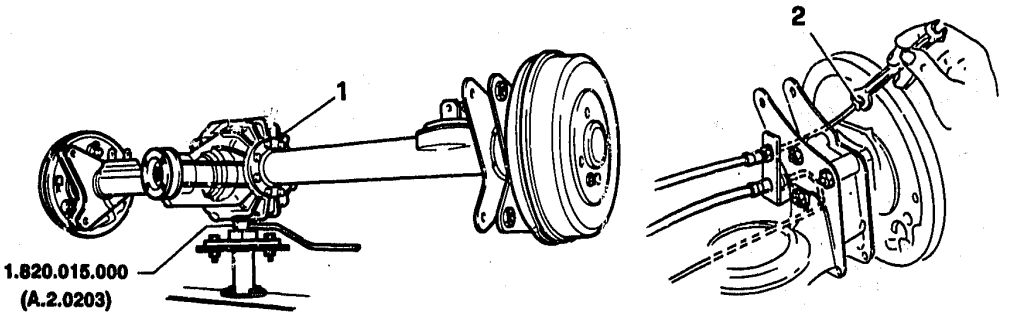

Make sure that differential oil has been drained off. Otherwise, drain it off.

- Remove rear axle (See GR. 25).

1. Set rear axle on stand fitted with support N° 1.820.015.000 (A.2.0203).
2. Unscrew pipe unions of hydraulic brake system, on brake cylinders, and remove rear pipes.

DISASSEMBLY (continued)

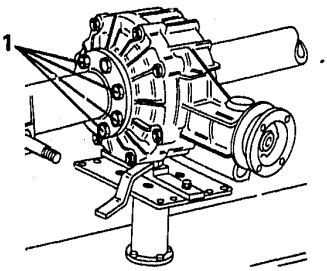

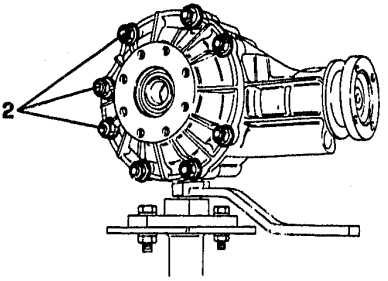

PA038H101

1. Remove the axle tube mounting bolts on the differential.

Support the tubes during the operation.

- Withdraw the axle tubes from the differential unit complete with half-shafts and brake drums.
2. Remove the differential casing cover nuts and washers.

DISASSEMBLY (continued)

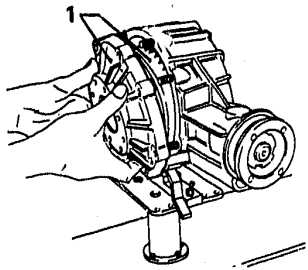

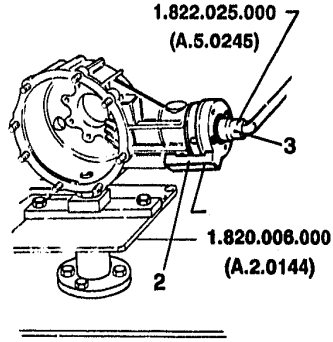

PA035H101

1. Using a plastic mallet, free the differential cover and remove it together with the differential cage.

Do not drop the differential cage

- Using a hammer and punch, open up the double peening on the pinion shaft retaining ring nut.

2. In order to prevent the propellor shaft flange from rotating, fit the locking tool No. 1.820.006.000 (A.2.0144) to it.
3. Using wrench No. 1.822.025.000 (A.5.0245) unscrew and remove the pinion shaft ring nut.

The nut removed must not be re-used.

DISASSEMBLY(continued)

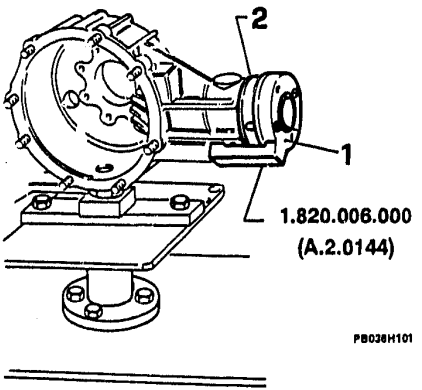

1. Remove the locking tool No. 1.820.006.000 (A.2.0144) mounted previously.
2. Remove the propellor shaft union flange.

- Towards the inside of the differential casing withdraw the pinion shaft complete with rear taper roller-bearing outer shell, spacer and bearing pre-load shim.
- Using a screwdriver remove the oil seal from the differential casing and at the same time withdraw the front taper roller-bearing inner shell.

Do not let the inner roller bearing shell drop on the ground.

DISASSEMBLY (continued)

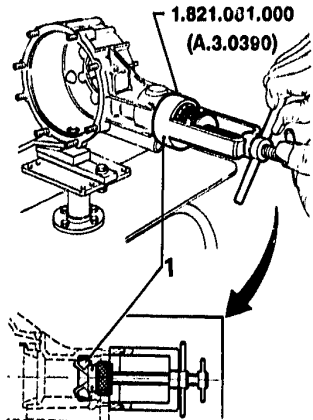

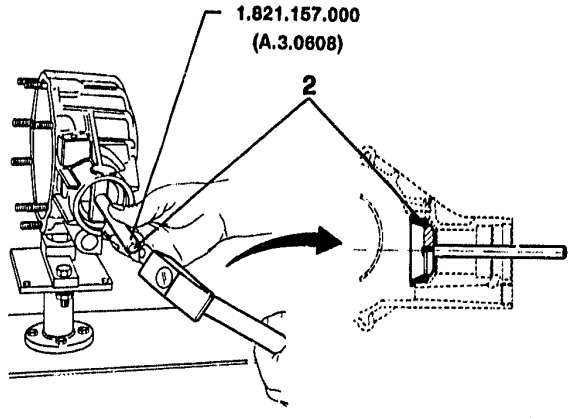

1. Using extractor tool No. 1.821.081.000 (A.3.0390), extract thye pinion shaft outer taper roller-bearing outer shell fromits seat.

2. Using extractor tool No. 1.821.157.000 (A.3.0608), extract the pinion shaft inner taper roller-bearing outer shell from its seat.



DISASSEMBLY (continued)

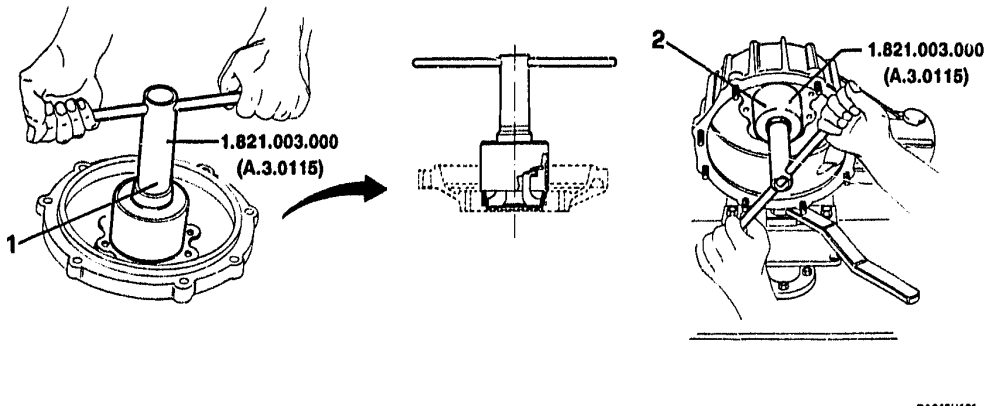

1. Using tool No. 1.821.003.000 (A.3.0115), extract the differential cage taper roller-bearing outer shell from the differential casing.
   - Remove the shim washer behind it.
2. Using tool No. 1.821.003.000 (A.3.0115) extract the differential cage taper roller-bearing outer shell from the differential casing.
   - Remove the shim washer behind it.

DISASSEMBLY(continued)

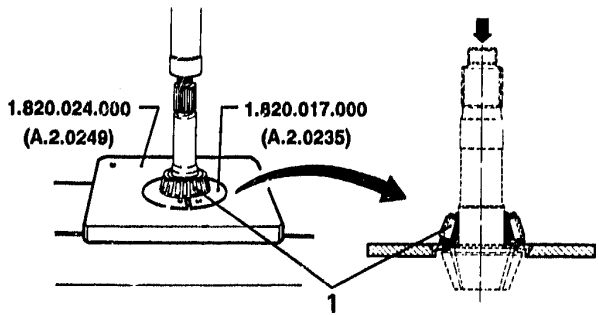

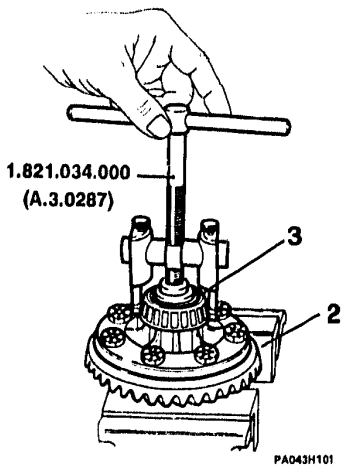

1. Using a press, two half-washers No. 1.820.017.000 (A.2.0235), and baseplate No. 1.820.024.000 (A.2.0249), withdraw the rear taper roller-bearing inner shell from the pinion shaft.
- Remve the shim washer that sets the correct gap between pinion and crown wheel axis.
2. Clamp the differential cage in a vice fitted with protective jaw grips.
3. Using tool No. 1.821.034.000 (A.3.0287) extract the taper roller-bearing inner shells.
- Remove the bolts holding the bevel crown wheel to the differential cage.
- Remove the crown wheel.

CHECKS AND INSPECTIONS

- Carefully clean the components, and remove all traces of old jointing compound on the mating surfaces between differential casing, cover, and axle tubes using denatured alcohol. Check the casing for surface defects.

Differential casing

1. Inspect the differential casing for cracks or chips.
2. Make sure that the threads in the axle tube attachment bolts are in good condition.
3. In particular, make sure that the pinion shaft and differential cage taper roller-bearing outer shells are not damaged.

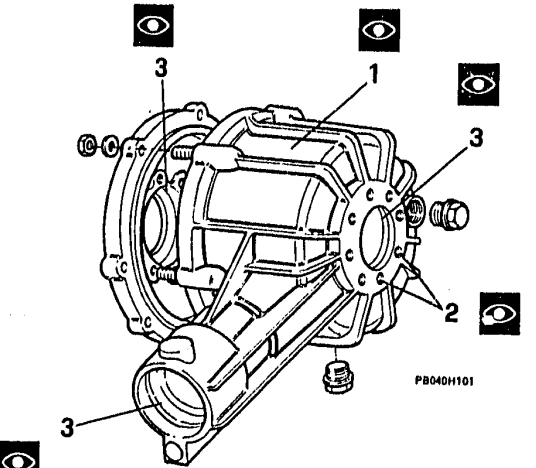

CHECKS AND INSPECTIONS (continued)

Bevel gears

1. Inspect the condition of the pinion shaft bearings.

- Ensure that the bevel pinion teeth operate on all their contact surface.

2. Furthermore ensure that neither pinion nor crown wheel teeth show signs of scrapes, seizing or excessive wear. If chipped teeth are found, the bevel gears must be replaced.

The crown wheel and pinion are supplied in pairs only. It is not possible to substitute only one of the two gears.
Make sure that the bevel gears to be re-assembled have the same mating code marked on the crown wheel and pinion respectively.

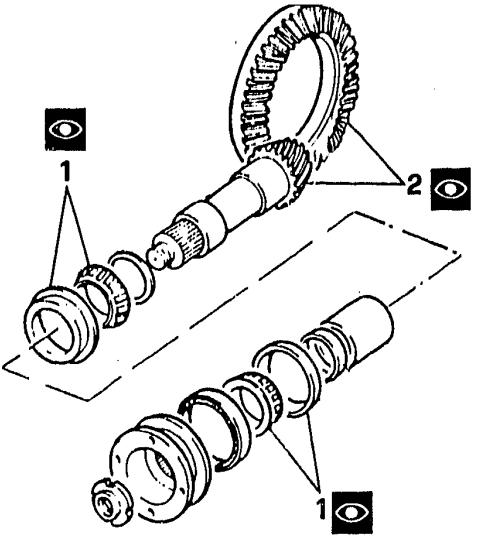

PB041H101

CHECKS AND INSPECTIONS (continued)

Differential cage

1. Carefully examine the bearings, rotating them slowly; bearings in good condition should be quiet and free noise and snagging.
- Examine the condition of the shells and revolving elements, checking for irregular wear, ridging, abrasion due to foreign bodies, signs of seizing or overheating. Substitute parts in defective condition, remembering that **taper rollerbearngs must always be replaced in matched pairs.**

2. Visibly inspect the the planetery and satellite gears for scrapes and signs of seizing, ensure that the teeth make contact over all their surfaces and that meshing is silent, without excessive play and snagging. If necessary replace the complete differential cage; in this case it is also advisable to replace the taper roller bearings.

If a new unit is used, remember that the gears are pre-loaded and as such they move stiffly.

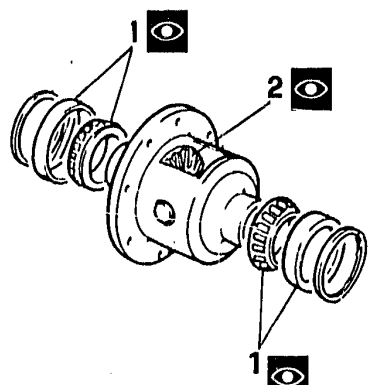

PB042H101

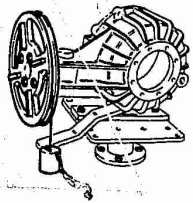

REAR DIFFERENTIAL (continued)

REAR DIFFERENTIAL.

REASSEMBLY.....17 - 43
ADJUSTMENTS.....17 - 49
Pinion shaft bearing pre-load.....17 - 49
Pinion - crown wheel axis spacing.....17 - 51
Differential cage bearing pre-load.....17 - 53
Crown wheel blacklash.....17 - 55
OIL SEAL REPLACEMENT
(on vehicle).....17 - 57

REAR DIFFERENTIAL

REASSEMBLY

- Fit the crown wheel to the differential cage after having carefully cleaned the mating surfaces.

Use only new replacement mounting bolts, which are pre-treated with locking compound for assembly.

1. Working diametrically, tighten the crown wheel bolts to the specified torque.

Tightening torque Crown wheel to differential cage (in oil)
68 ÷ 75 Nm (6,9 ÷ 7,6 Kgm)

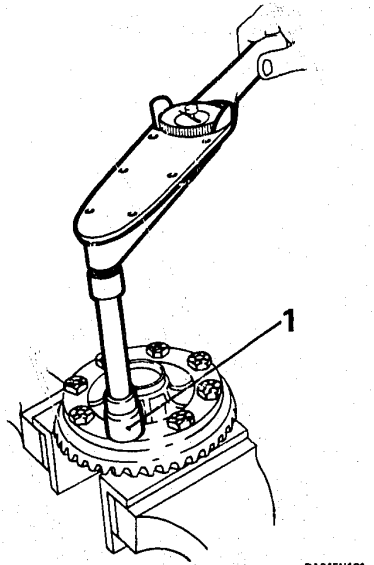

PA045H101

REASSEMBLY (continued)

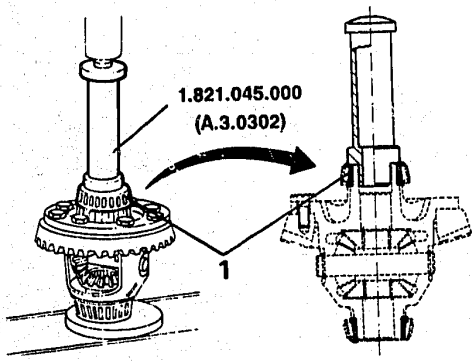

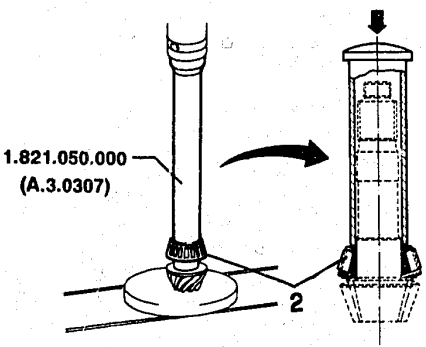

PA046H10

1. Using tool No. 1.821.045.000 (A.3.0302) fir the inner shell and race of the roller bearings on the differential cage hub.
- Refit the shim washer removed during dismantling back to the pinion shaft.

2. Using tool No. 1.821.050.000 (A.3.0307) and press, fit the rear taper roller-bearing inner shell and race on the pinion shaft.

REASSEMBLY (continued)

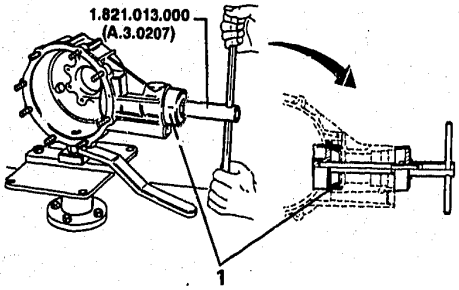

PA047H101

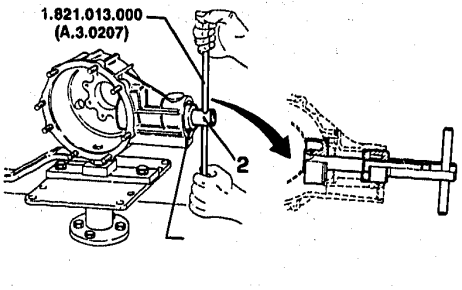

PA047H102

1. Using tool No. 1.821.013.000 (A.3.0207), drive the rear pinion shaft bearing outer shell into its seating in the differential casing.

2. Using tools No. 1.821.013.000 (A.3.0207) e No. 1.821.040.000 (A.3.0296), drive the front pinion shaft bearing outer shell into its seating in the differential casing.



REASSEMBLY (continued)

- Carry out the following adjustments:
- pinion shaft bearing pre-loading
- pinion - crown wheel axis spacing
- differential cage bearing pre-loading
- crown wheel backlash
- finish re-assembly as described below.

REASSEMBLY (continued)

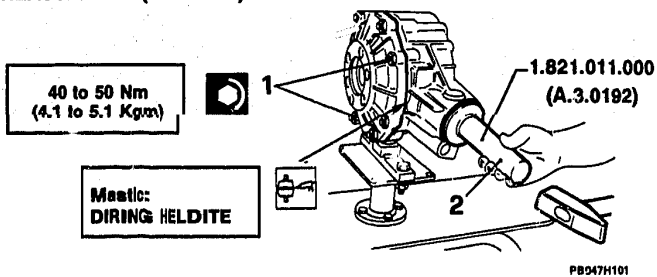

- Once adjustments are complete, again remove differential casing cover. Then smear a coat of specified sealant on cover mating surface .
1. Refit cover and tighten nuts to specified torque .
- Fit tool N° 1.820.006.000 (A.2.0144) on propeller shaft flange; then, using wrench N° 1.822.025.000 (A.5.0245), unscrew the bearing pre-load ring nut.
- Remove ring nut and take off flange, together with locking tool.
2. Insert a new oil seal, after lubricating it with the specified grease, in the differential outer casing, using tool N° 1.821.011.000 (A.3.0192).

REASSEMBLY (continued)

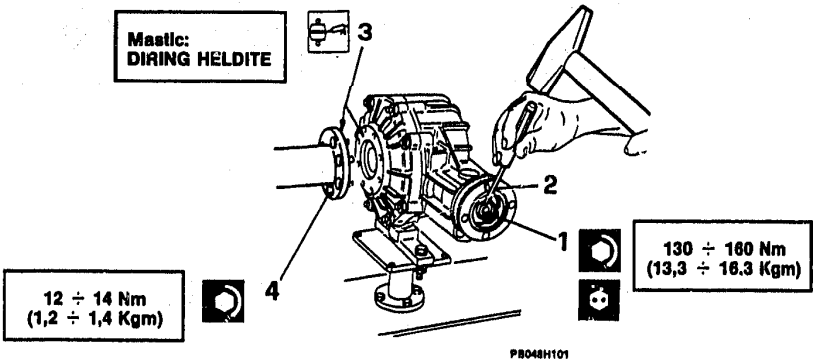

- Refit flange complete with locking tool on pinion shaft.
1. Screw ring nut on shaft spline, tightening it to the specified torque.
2. Peen over nut in two places.
3. Using denatured ethyl alcohol, clean off old sealant axle tube - differential casing mating surfaces and apply a coat of specified sealant.
4. Refit axle tubes to differential assembly and tighten the bolts to the specified torque.
- Refit rear axle (See **GR. 25**).

REAR DIFFERENTIAL (continued)

ADJUSTMENTS

Pinion shaft bearing pre-load

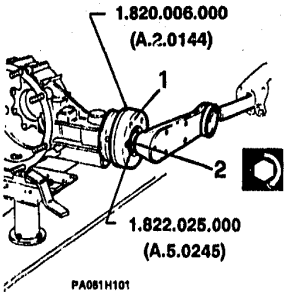

130 ÷ 160 Nm
(133 ÷ 163 Kgm)

- Insert the pinion shaft complete with spacer and fit a shim washer 0,10 mm thicker than that removed when dismantling, to pre-load the bearings.
- From the front part of the differential casing, fit the inner shell of the front taper roller-bearing to the pinion shaft.
- Fit the propellor shaft union flange on to the keyed part of the shaft, and tighten up a new retaining nut by hand.

1. Fit the locking tool No. 1.820.006.000 (A.2.0144) to the flange.

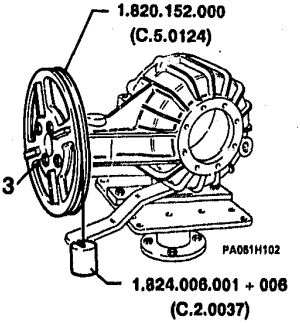

2. Using a torque wrench with extension No. 1.822.025.000 (A.5.0254), tighten the nut to the specified torque.

- Remove the locking tool from the flange and rotate the pinion a few turns by hand in both directions to settle the bearings.

3. Fit test disk No. 1.820.152.000 (C.5.0124) with 100 mm radius to the pinion shaft union flange, and attach weight No. 1.824.006.001 ÷ 006 (C.2.0037)



ADJUSTMENTS

Pinion shaft bearing pre-load (continued)

- Make sure that the weight drops at an even rate without stopping or spinning the disk too fast. Check that in these conditions the rolling torque is as specified.

Rolling torque of pinion only	
Reused bearings	**New bearings**
20 to 24 Ncm (2 to 2.5 Kgcm)	78 to 117 Ncm (8 to 12 Kgcm)

This is a purely rolling torque; i.e., the oil seal must not be fitted.

- If the rolling torque values are higher or lower than those specified, they must be corrected by using a thicker or thinner shim than the one fitted.

Replacement shims vary in thickness by ± 0,05 mm. each time.

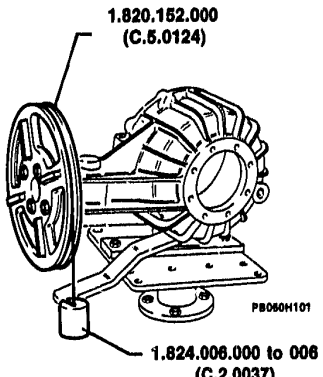

- Recheck rolling torque, until the specified one is achieved.
- Once the right rolling torque is achieved, still keeping disk N° 1.820.152.000 (C.5.0124) mounted on propeller shaft flange, determine the distance between pinion and crown wheel axis.

ADJUSTMENTS (Continued)

Pinion - crown wheel axis spacing

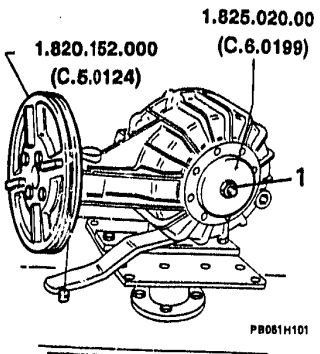

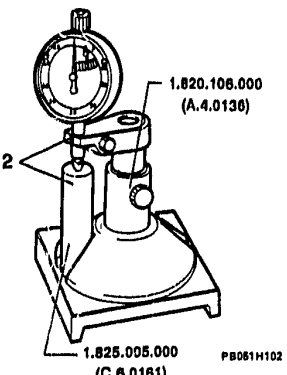

1. Fit crown wheel axis reference tool No. 1.825.020.000 (C.6.0199) into the seating for the outer taper roller-bearing shell in the differential casing.
2. Fit a dial indicator (reading to hundredths of millimetres) to support No. 1.820.106.000 (A.4.0136) and reset it using reference piece No. 1.825.005.000 (C.6.0161).

- Read the value "C", positive or negative, on the top of the pinion.

ADJUSTMENTS

Pinion - crown wheel axis spacing (Continued)

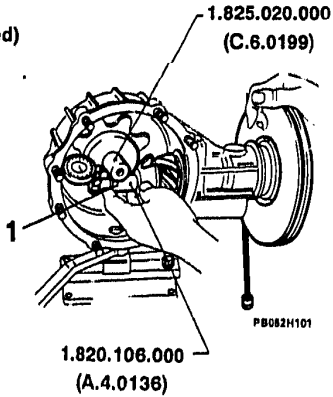

Set the above support and dial indicator on the top of the pinion and read off the shift "L" (positive or negative) from distance "B" (nominal distance between pinion head and outer generatrix of pin on tool No. 1.825.020.000 (C.6.0199) for crown wheel axis reference).

This reading must correspond exactly in value and sign (positive or negative) to the number stamped on the pinion.

- If this is not the case, the pinion must be refitted with a different thickness of shim "S". Use the following calculation:

$$S = \pm L - (\pm C)$$

. **Add shims to bring the pinion closer to the crown wheel.**

. **Remove shims to shift the pinion away from the crown wheel axis.**

- Select the shim nearest to the calculated thickness from the range available.

ADJUSTMENTS (Continued)

Differential cage bearing pre-load

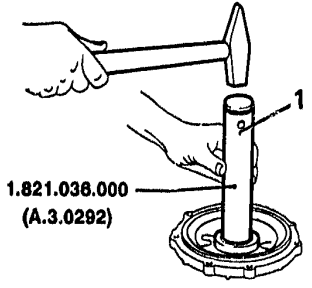

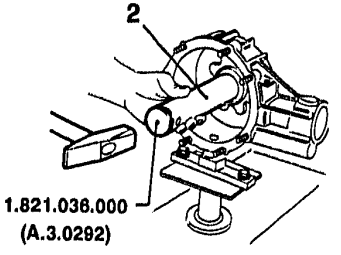

1. Drop the respective shim washer (removed when dismantling) into its seat in the differential casing cover, and using tool No. 1.821.036.000 (A.3.0292), fit the differential cage bearing outer shell.

Make sure that the bearing shell fits perfectly in its seating in the cover.

2. Drop the respective shim washer (removed during dismantling) into its seat in the differential casing, and using tool No. 1.821.036.000 (A.3.0292), fit the taper roller-bearing outer shell.

Make sure that the bearing shell fits perfectly in its seating.

ADJUSTMENTS

Differential cage bearing pre-load (Continued)

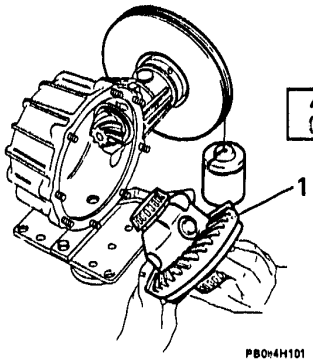

40 ÷ 50 Nm
(4 ÷ 5 Kgm)

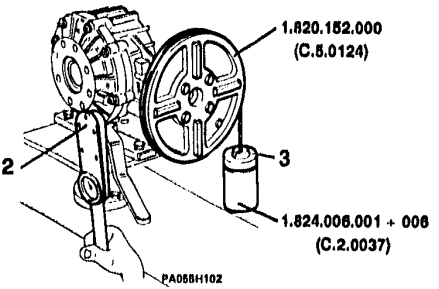

Rotating torque for static bearing pre-load	
For re-used bearings 30 ÷ 34 Ncm (3 ÷ 3,5 kgcm)	For new bearings 127 ÷ 166 Ncm (13 ÷ 17 kgcm)

1. Insert the complete differential cage into the differential casing.
2. Fit the cover over the casing studs, screw on the nuts and tighten them to the specified torques, working diametrically.
3. Wind the cord around test disk No. 1.820.152.000 (C.5.0124) and let weight No. 1.824.006.001 ÷ 006 (C.2.0037) drop, making sure that it descends regularly without stopping or spining the disk too fast.

- If the weight does not descend correctly, remove the cover, and using tool No. 1.821.003.00 (A.3.0115), remove the roller-bearing outer shell from the differential casing; remove the shim washer and correct its thickness accordingly until the correct rotating torque is found.

Shim thickness should be increased if the weight drops too fast, and decreased if it won't descend.

- Remove the test disk and weight from the pinion shaft flange.

ADJUSTMENTS (Continued)

Crown wheel backlash

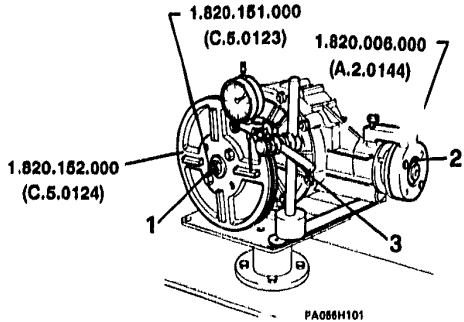

1. Fit extension piece No. 1.820.151.000 (C.5.0124) to the differential output shaft, and mount test disk No. 1.820.152.000 (C.5.0124).
2. Prevent the bevel pinion from moving using tool No. 1.820.006.000 (A.2.0144).
3. Set up a dial indicator with magnetic base on the differential unit support tool, and set the probe on one of the rigs of the disk at a point corresponding with the mean crown wheel tooth radius.

In this position the dial indicator reads the effective crown wheel backlash at the mean tooth radius.

Mean crown wheel tooth radius = 67,5 mm

- With the pinion locked, rock the disk and check that the backlash reading "G" for the mean crown wheel radius meets the specifications.

Crown wheel backlash "G"
0,05 ÷ 0,10 mm

ADJUSTMENTS

Crown wheel backlash (Continued)

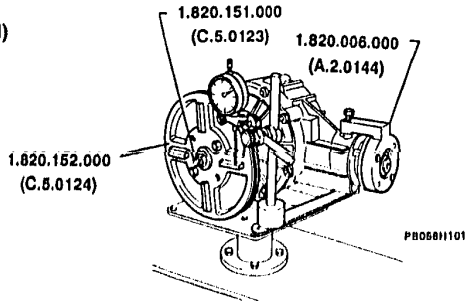

The backlash measurement must be carried out in four positions on the crown wheel, rotating the differential cage using disk No. 1.820.152.000 (C.5.0124), and locking and unlocking the pinion using tool No. 1.820.006.000 (A.2.0144).

- If crown wheel backlash read off the dial indicator does not meet the specifications, the differential cage bearing shims must be corrected.
- If backlash is insufficient the crown wheel must be shifted away from the pinion, and shims of the same thickness must be removed from the crown wheel side and added to the casing side.
- If backlash is excessive, the crown wheel must be brought closer to the pinion, and shims of the same thickness must be removed from the casing side and added to the crown wheel (ccover) side.

Since the increase in shim thickness on one side balances the decrease in thickness on the other, the crown wheel is shifted without altering the bearing pre-load.

Remove the test disk N° 1.820.152.000 (C.5.0124) and extension piece N° 1.820.151.000 (C.5.0123) from the differential output shaft.

OIL SEAL REPLACEMENT (on vehicle)

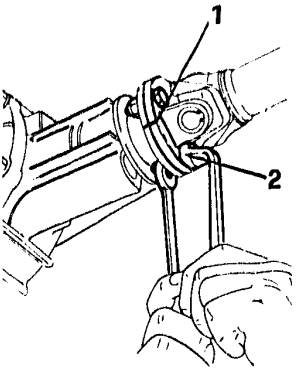

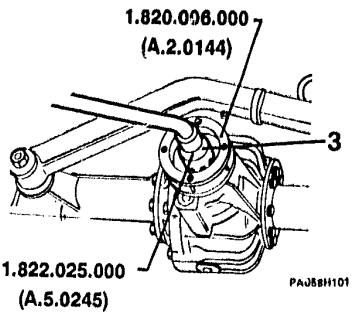

1. Scribe a reference mark on the rear propellor shaft union flange for re-assembly purposes.
2. Undo the four union bolts and disconnect the flange.

- Remove the oil filler and drain plugs from the rear differential casing. Let the oil drain out, then clean the plugs and replace them.
- Using a punch, open up the double peening on the pinion shaft retaining nut.

3. In order to prevent the pinion from rotating, fit locking tool No. 1.820.006.000 (A.2.0144) to the pinion shaft union flange, and using wrench No. 1.822.025.000 (A.5.0245) free and remove the retaining nut.

The retaining nut must not be re-used.

OIL SEAL REPLACEMENT (on vehicle) continued

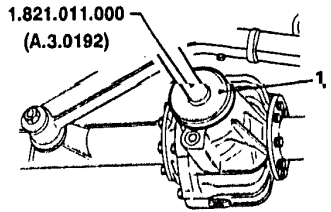

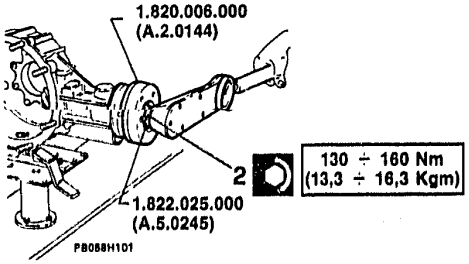

- Using a lever, remove the oil seal.

1. Select a new oil seal, smear it with the specified grease and insert it in its seating using insertion tool No. 1.821.011.000 (A.3.0192).

2. Refit the flange complete with lock tool, and using wrench No. 1.822.025.000 (A.5.0245), tighten the new retaining nut to the specified torque.

- Remove the pinion shaft lock tool, and using a punch, peen over the nut in two places.

- Position the propellor shaft flange on the pinion shaft flange in the same position from which it was dismantled (using the reference mark). Fit and tighten the union bolts to the specified torque.

Rear differential propellor shaft union bolts
17,6 ÷ 21,5 Nm (1,8 ÷ 2,2 Kgm)

- Refill the differential unit with the specified type and quantity of oil (see TSN).

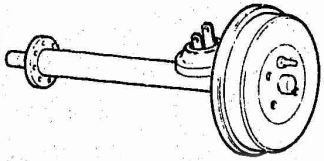

HALF-SHAFTS

HALF-SHAFTS

ASSEMBLY.....17 - 59
DISASSEMBLY.....17 - 60
CHECKS AND INSPECTIONS.....17 - 63
REASSEMBLY.....17 - 64
HALF-SHAFT OIL SEAL AND BEARING
REPLACEMENT (on vehicle).....17 - 67

HALF SHAFTS
ASSEMBLY

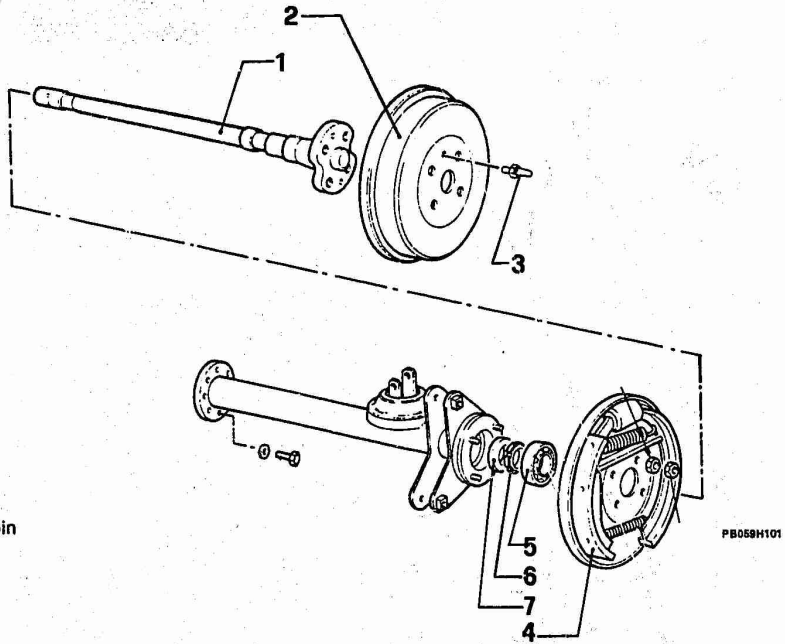

1 Drive shaft
2 Brake drum
3 Wheel centering pin
4 Brake shoe plate
5 Bearing
6 Ring nut
7 Oil seal

HALF SHAFTS (continued)

DISASSEMBLY

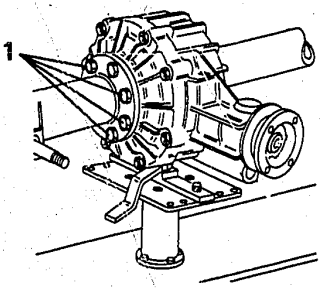

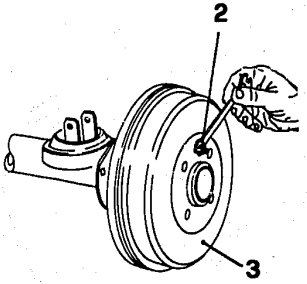

- Remove rear axle (See **GR. 25**).

1. Separate axle tubes complete with half shaft and drum brake from differential unit, unscrewing the screws.

- Grip complete axle tube in a vice fitted with protective jaws.

2. Unscrew and remove wheel centering pin.
3. Remove drum brake.

HALF-SHAFTS

DISASSEMBLY (continued)

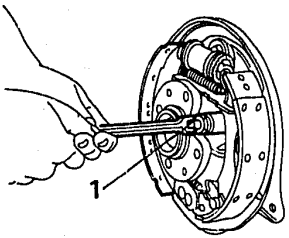

1. Remove the eight nuts and locknuts holding the brake back plate to the axle tube.

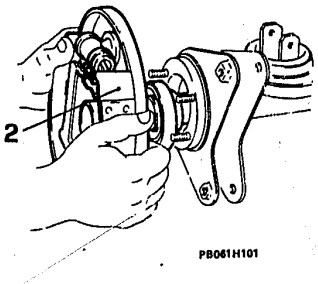

2. Pull the backplate outwards so as to withdraw the half-shaft from the tube.

HALF-SHAFTS

DISASSEMBLY (continued)

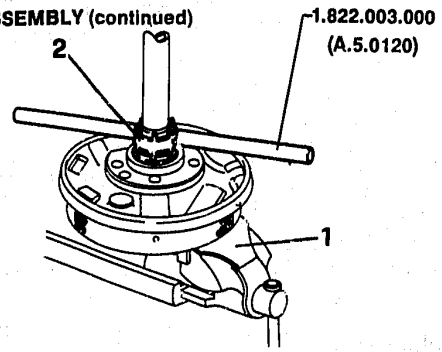

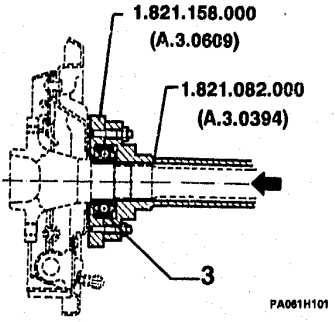

1. Clamp the half-shaft in a vice fitted with protective jaw grips.
- Uisng a suitable punch that will not damage the threads, open up the double peenings on the locking nut.
2. Using tool N° 1.822.003.000 (A.5.0120) unscrew the locking nut.

If unexpected resistance is felt when unscrewing the nut, do not try to force it, but screw it down and up again until it is completely free, so as to avoid damaging the half-shaft threads.

3. Using tool N° 1.821.082.000 (A.3.0394) with half-washers No. 1.821.158.000 (A.3.0609), withdraw the bearing from the half shaft.
- With the bearing removed the brake back plate can be threaded off the shaft.
- Remove the oil seal from the axle tube with a screwdriver.

The oil seal must not be re-used.

CHECKS AND INSPECTIONS

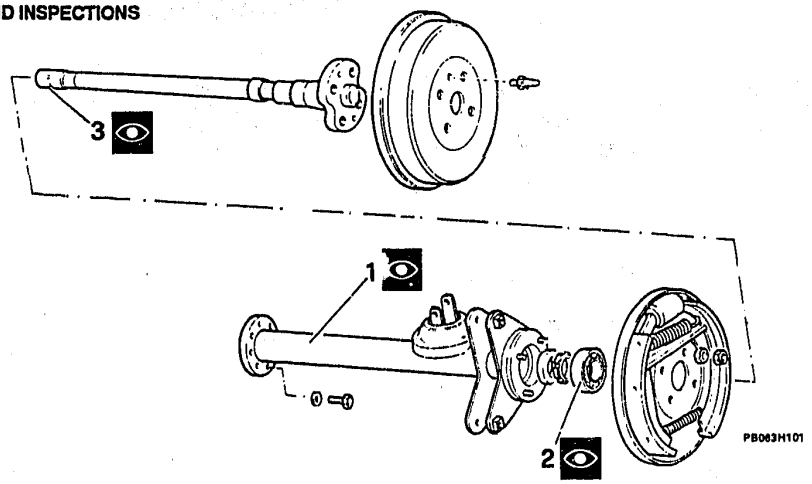

- Carefully clean the components and examine them for surface defects.

1. Make sure the axle tubes are free from marks or scrapes, especially near the union faces with the differential casing and the brake back plates.
2. Slowly rotate the half-shaft bearings and examine them closely; bearings in good condition should be free of noise and snagging.

- Examine the bearing surfaces for ridging, or signs of grating and abrasion.
- Check the condition of the sealing lips. Replace any part in defective condition.

3. Inspect the shaft splines, and make sure they are free of scrapes, and signs of seizing or excessive wear.

- Check the surfaces of the half-shafts themselves.

REASSEMBLY

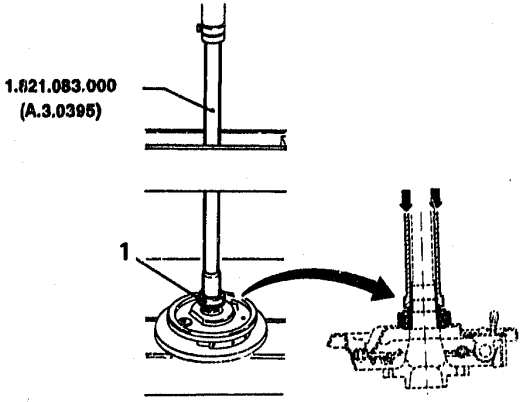

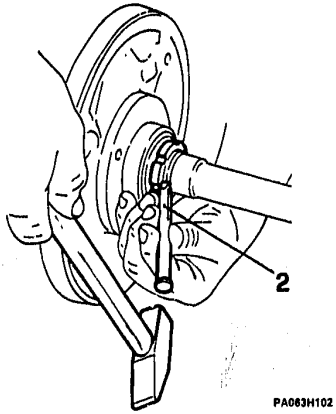

1. Thread the brake back plate on the half-shaft and fit the bearing using tool No 1.821.083.000 (A.3.0395) and a press.
- Clamp the half-shaft in a vice fitted with protective jaw grips, then fit and tighten the lock nut.

2. Using a punch, peen over the lock nut in two places.

REASSEMBLY (continued)

1. Smear the new oil seal with the specified grease, and using tool N° 1.821.029.000 (A.3.0274), fit it into the seat in the axle tube, making sure it is the right way round.

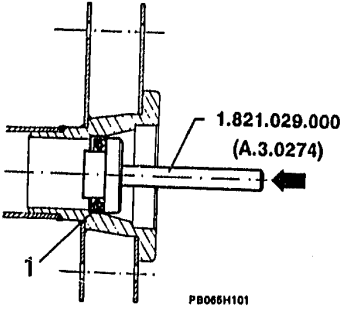

REASSEMBLY (continued)

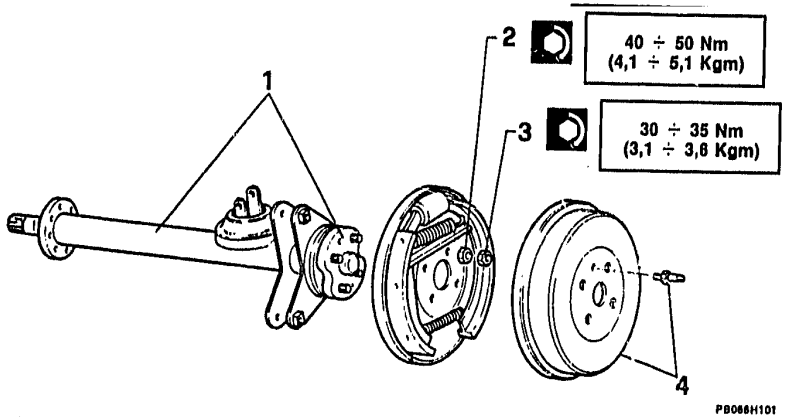

1. Guide the half-shaft into the axle tube, taking care not to damage the oil seal fitted previously.
2. Refit the brake backplate retaining nuts and tighten them to the specified torque, working diametrically.
3. Fit and tighten the four lock nuts to the specified torque.
4. Refit the brake drum and screw in the centering pin.

HALF-SHAFT OIL SEAL AND BEARING REPLACEMENT (on vehicle)

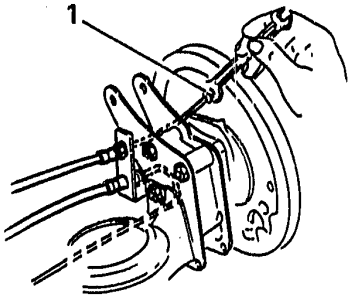

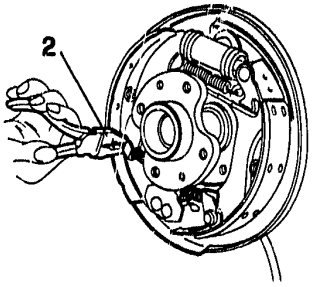

PA065H101

- Block the front wheels using suitable safety chocs, lift the rear of the vehicle and rest it on axle stands.
- Remove the wheel from one side.

1. Disconnect the brake pipe from the brake cylinder union and plug it to prevent the ingress of dirt.

- Remove the wheel centering pin and lift off the drum.

2. With pliers, detach the handbrake cable eye from the brake lever.

HALF-SHAFT OIL SEAL AND BEARING REPLACEMENT (on vehicle) Continued

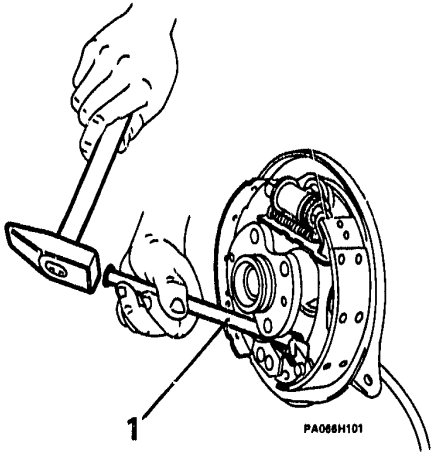

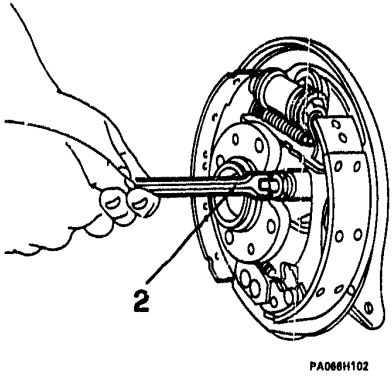

1. Using a punch, force the end of the handbrake cable sheath out of the housing in the brake backplate.

2. Remove the brake backplate locknuts and mounting nuts.

HALF-SHAFT OIL SEAL AND BEARING REPLACEMENT (on vehicle) Continued

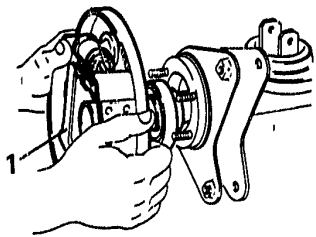

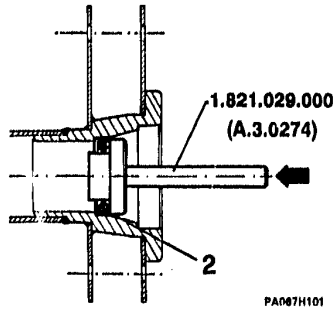

1. Pull the brake backplate outwards to extract the half-shaft from the axle tube.
- Using a lever, remove the oil seal from the axle tube seating.

2. Select a new oil seal, smear it with the specified grease, position it the right way round in the axle tube and fit it using tool No. 821.029.000 (A.3.0274)

HALF-SHAFT OIL SEAL AND BEARING REPLACEMENT (on vehicle) Continued

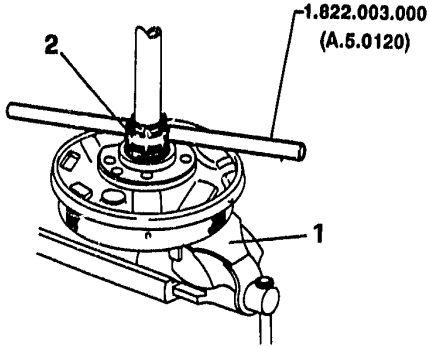

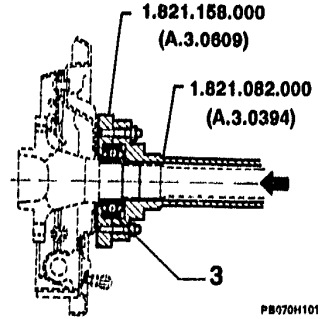

1. Tighten the half shaft in a vice fitted with protective jaws.
- Using a suitable punch that will not damage the threads, open up the double peenings on ring nut locking bearing in position.
2. Using tool N° 1.822.003.000 (A.5.0120), unscrew the ring nut fastening the bearing in position.

If unexpected resistance is met with when unscrewing the ring nut, do not force it but screw and unscrew several times until the ring nut screws off completely. In this way the thread on the shaft will not be damaged.

3. Using tool N° 1.821.082.000 (A.3.0394) together with half-washers N° 1.821.158.000 (A.3.0609), withdraw the bearing from the shaft.

HALF-SHAFT OIL SEAL AND BEARING REPLACEMENT (on vehicle) Continued

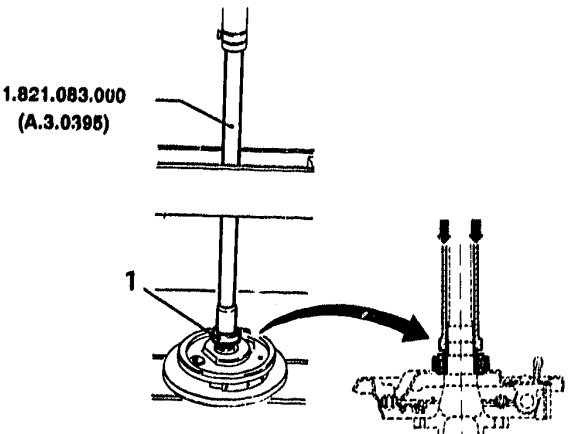

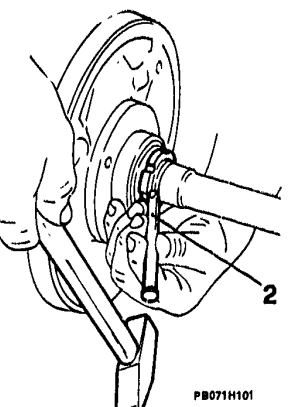

1. Using tool N° 1.821.083.000 (A.3.0395) and a press couple the new bearing.
   - Grip half shaft in vice fitted with protective jaws; then fit and tighten bearing ring nut.
2. Using a punch, peen over the ring nut in two places.

HALF-SHAFT OIL SEAL AND BEARING REPLACEMENT (on vehicle) Continued

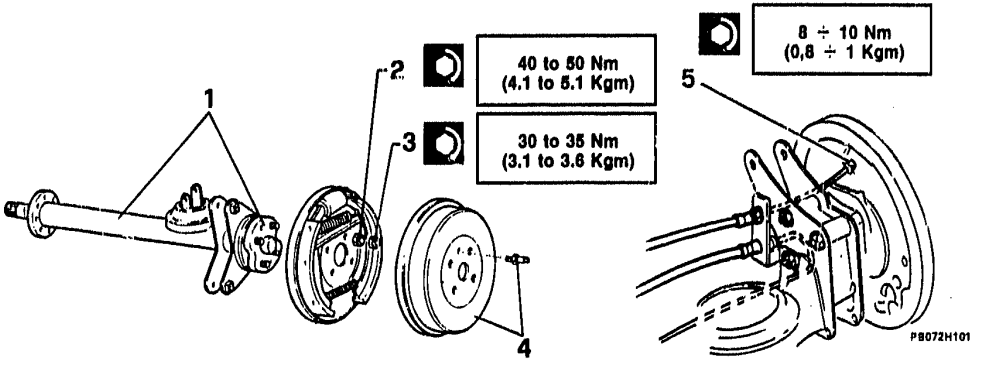

1. Guide the half shaft into the axle tube, taking care not to damage the oil seal.
2. Screw on the four nuts securing the brake back plate to the axle tube, tightening them crosswise to the specified torque.
3. Screw on the tighten the four lock nuts to the specified torque.

- Insert the end of the handbrake cable sheath in the recess on the brake back plate.
- Using pliers, reattach handbrake cable eye to the brake operating lever on the back plate.

4. Refit brake drum and screw in the centering pin.
5. Reconnect brake pipe to the brake cylinder, tightening the union nut to the specified torque.

- Bleed brake system and check handbrake works properly (See **GR. 22**).
- Fit wheel back on.

TSN

TECHNICAL SPECIFICATIONS AND NOTES

SPECIAL TOOLS

TECHNICAL SPECIFICATIONS AND NOTES

FLUIDS AND LUBRICANTS ..... 17 - 73
SEALERS AND JOINTING COMPOUNDS (specific for 4x4 versions) ..... 17 - 74
ROTATING TORQUES ..... 17 - 74
CHECKS AND ADJUSTMENTS ..... 17 - 75
Crown wheel blacklash ..... 17 - 75
Shim washer thickness "S" for pinion shaft bearing pre-load ..... 17 - 75
CHECKS AND ADJUSTMENTS (Specific for 4x4 versions) ..... 17 - 76
Shim thickness "S" for pinion-crown wheel axis spacing ..... 17 - 76
Shim thickness "S" for pinion shaft bearing pre-load ..... 17 - 76
Shim thickness "S" for differential cage bearing pre-load ..... 17 - 77
TIGHTENING TORQUES ..... 17 - 78
SPECIAL TOOLS ..... 17 - 79

TECHNICAL SPECIFICATIONS AND NOTES

FLUIDS AND LUBRICANTS

APPLICATION	TYPE	PRODUCT	QTY
Drive-shaft CV joints (each joint) Divide the quantity of grease between the two halves of the CV joint	GREASE	Molykote VN 2461 C Optimol Olistamoly 2 LN 584	80 g

FLUIDS AND LUBRICANTS (Specific for 4x4 versions)

APPLICATION	TYPE	PRODUCT	QTY
1. Differential unit oil seal – Sealing lip and shaft seating	GREASE	ISECO: Molykote BR2	
– Oilseal outer surface	OIL	See point 2.	
2. Refilling rear differential unit	OIL	AGIP Rotra MP SAE 80W90 IP Pontiax HD SAE 80W90 TUTELA W90/M-DA	0,9 kg (1,0 l)

SEALERS AND JOINTING COMPOUNDS (Specific for 4x4 versions)

APPLICATION	TYPE	PRODUCT	QTY
Axle tube - differential cover differential casing mating surfaces	MASTIC	DIRING HELDITE	

ROTATING TORQUE

COMPONENT / UNITS	N.cm	kg.cm
Pinion shaft (for taper roller-bearing static pre-load calculation)		
– re-used bearings	20 ÷ 24	2 ÷ 2,5
– new bearings	78 ÷ 117	8 ÷ 12
Differential cage (for taper roller-bearing static pre-load calculation)		
– re-used bearings	30 ÷ 34	3 ÷ 3,5
– new bearings	127 ÷ 166	13 ÷ 17

CHECKS AND ADJUSTMENTS

Crown wheel backlash

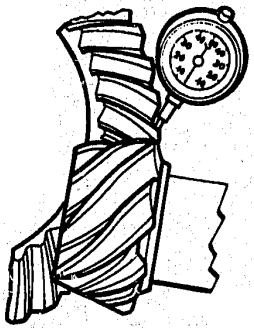

PA071H101

Gioco	mm	0,08 ÷ 0,13

Shim washer thickness "S" for pinion shaft bearing pre-load

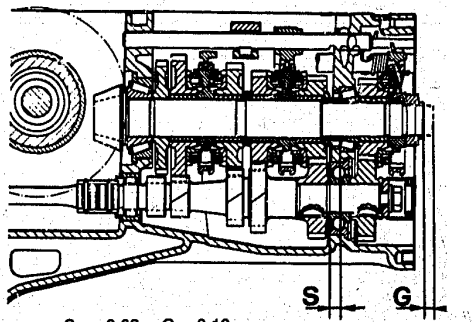

PA071H102

S = 9,60 – G – 0,10
9,60 = sample shim thickness
G = dial indicator backlash
0,10 = correction factor

SHIM mm	SHIM mm
4,10	4,55
4,15	4,65
4,25	4,75
4,35	4,80
4,45	

CHECKS AND ADJUSTMENTS (Specific for 4x4 versions)

Shim thickness "S" for pinion - crown wheel axis spacing

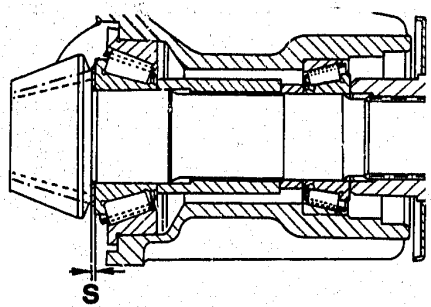

PA072H101

SHIM mm	SHIM mm
0,60	0,90
0,65	0,95
0,70	1,00
0,75	1,05
0,80	1,10
0,85	

Shim thickness "S" for pinion shaft bearing pre-load

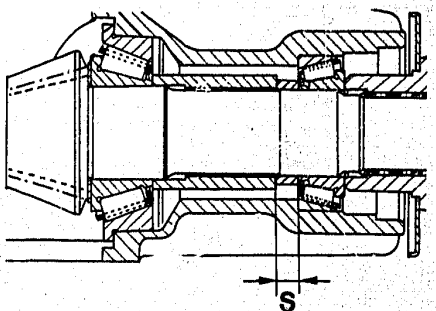

PA072H102

SHIM mm	SHIM mm
4,10	4,55
4,15	4,65
4,25	4,75
4,35	4,80
4,45	

CHECKS AND ADJUSTMENTS (Specific for 4x4 versions) Continued

Shim thickness "S" for differential cage bearing pre-load

SHIM mm	SHIM mm
1,10	1,75
1,15	1,80
1,20	1,85
1,25	1,90
1,30	1,95
1,35	2,00
1,40	2,05
1,45	2,10
1,50	2,15
1,55	2,20
1,60	2,25
1,65	2,30
1,70	

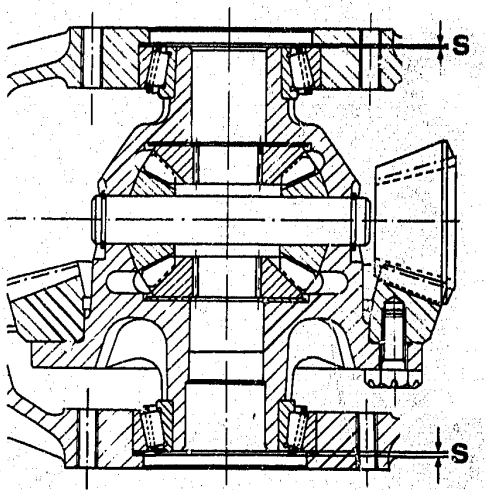

PA073H101

TIGHTENING TORQUES

ITEM \ UNIT OF MEASUREMENT	N.m	kg.m
Bolts (in oil) securing drive shaft with external spacer to differential shaft	30 to 35	3 to 3.5
Nut securing shaft to wheel hub	427 to 472	43 to 48
Screws securing ring bevel gear (in oil)	67 to 74	6.8 to 7.5
Screws securing differential support	39 to 48	4 to 4.9

TIGHTENING TORQUES (Specific for 4 × 4 versions)

ITEM \ UNIT OF MEASUREMENT	N.m	kg.m
Screws securing crown wheel to differential casing (in oil)	68 to 75	6.9 to 7.6
Ring nut securing bevel pinion	130 to 160	13.3 to 16.3
Nuts securing axle cover to external casing	40 to 50	4 to 5
Screws securing axle tubes to external casing	12 to 14	1.2 to 1.4
Bolts securing propeller shaft to rear differential	17.6 to 21.5	1.8 to 2.2
Brake back plates	40 to 50	4 to 5
Brake back plate locknuts	30 to 35	3 to 3.5
Brake system pipe union	8 to 10	0.8 to 1

SPECIAL TOOLS

1.820.006.000 (A.2.0144)	Pinion clamp tool	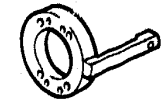 PA078H101
1.820.015.000 (A.2.0203)	Gearbox support	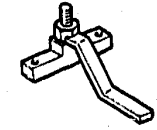 PA078H102
1.820.017.000 (A.2.0235)	Half-washers for bearing extraction	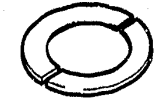 PA078H103
1.820.021.000 (A.2.0243)	Pinion locking tool	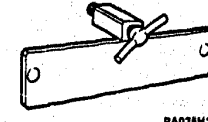 PA078H104

⇩

1.820.024.000 (A.2.0249)	Baseplate for pressing out bearings	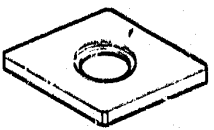 PA076H101
1.821.003.000 (A.3.0115)	Extraction tool for differential casing outer bearing shells	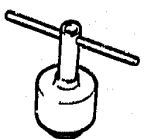 PA076H102
1.821.011.000 (A.3.0192)	Pinion oil seal insertion tool	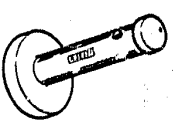 PA076H103
1.821.013.000 (A.3.0207)	Insertion tool for outer shell of rear taper roller-bearing in differential casing	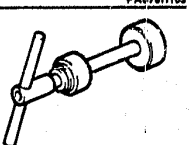 PA076H104

1.821.029.000 (A.3.0274)	Half-shaft oil seal insertion tool	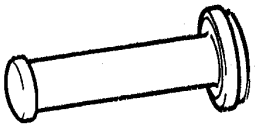 PA077H101
1.821.034.000 (A.3.0387)	Adjustable bearing extractor for inner shellsin differential casing	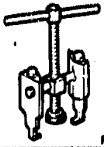 PA077H102
1.821.036.000 (A.3.0292)	Insertion tool for taper roller-bearing outer shells in differential casing and cover	 PA077H103
1.821.037.000 (A.3.0293)	Gear and bearing ringnut insertion tool	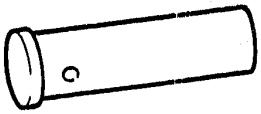 PA077H104

1.821.039.000 (A.3.0295)	Differential shaft extraction plate	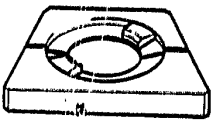 PA078H101
1.821.040.000 (A.2.0296)	Insertion tool for pinion shaft front taper roller-bearing outer shell in differential casing	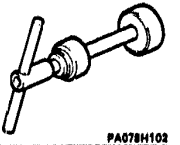 PA078H102
1.821.042.000 (A.3.0298)	Extractor tool for differential output shaft nut	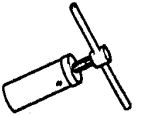 PA078H103
1.821.043.000 (A.3.0299)	Bearing extractor for outer shells in differential supports	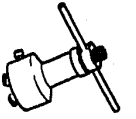 PA078H104

⇩

1.821.045.000 (A.3.0302)	Rear axle hub bearing insertion - extraction tool	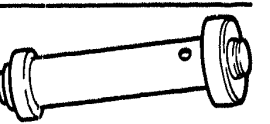 PA079H101
1.821.048.000 (A.3.0305)	Insertion tool for inner bearing shells on differential cage hubs	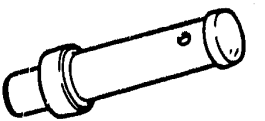 PA079H102
1.821.050.000 (A.3.0307)	Bearing inner shell insertion tool	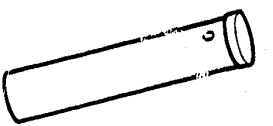 PA079H103
1.821.081.000 (A.3.0390)	Extraction tool for pinion shaft front bearing outer shell	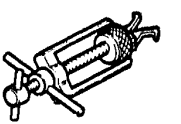 PA079H104



1.821.082.000 (A.3.0294)	Half-shaft bearing extraction tool	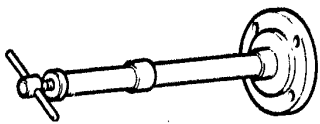 PA060H101
1.821.083.000 (A.3.0395)	Half-shaft bearing insertion tool	 PA060H102
1.821.099.000 (A.3.0430)	Half-shaft oil seal insertion tool	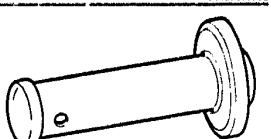 PA060H103
1.821.155.000 (A.3.0605)	Drive-shaft - CV joint insertion/separating tool	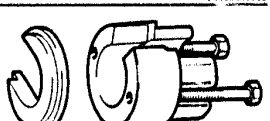 PA060H104

⇩

1.821.157.000 (A.3.0608)	Extractor tool for pinion shaft rear bearing outer shell	 PA081H101
1.821.106.000 (A.3.0609)	Half-rings for half-shaft bearing extraction	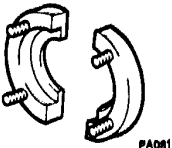 PA081H102
1.820.106.000 (A.4.0136)	Dial indicator base	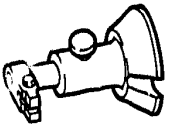 PA081H103
1.822.003.000 (A.5.0120)	Wrench for half-shaft bearing ring nut	 PA081H104

⇩

1.822.025.000 (A.5.0245)	Pinion locking wrench	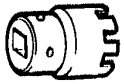 PA082H101
1.824.006.001 (C.2.0037/0100)	100 g weight for bearing pre-load test	 PA093D101
1.824.006.002 (C.2.0037/0150)	150 g weight for bearing pre-load test	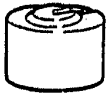 PA093D102
1.824.006.003 (C.2.0037/0200)	200 g weight for bearing pre-load test	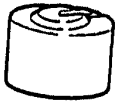 PA093H103



'.824.006.004 (C.2.0037/0300)	300 g weight for bearing pre-load test	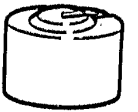 PA092D104
1.824.006.005 (C.2.0037/1000)	1000 g weight for bearing pre-load test	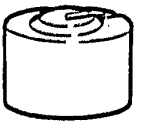 PA094H101
1.824.006.006 (C.2.0037/2000)	2000 g weight for bearing pre-load test	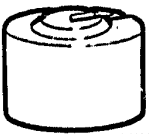 PA094H102

⇩

1.820.151.000 (C.5.0123)	Extension piece for bearing pre-load test disk	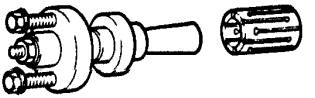 PA084H101
1.820.152.000 (C.5.0124)	Differential cage bearing pre-load test disk	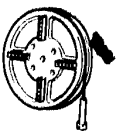 PA088D103
1.825.005.000 (C.6.0161)	Reference piece	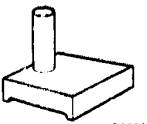 PA094D103
1.825.020.000 (C.6.0199)	Pinion generatrix test tool	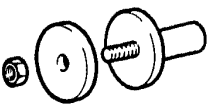 PA094H103

⇩

MICROFICHE INDEX

Microfiche 10/15 Groups: 21-22-23-25-28



Group 21 - Front suspension

FRONT SUSPENSION, WHEEL HUB FRONT ..... 21 - A
COIL SPRING AND SHOCK ABSORBERS,
STRUT AND TRANSVERSE ARM ..... 21 - B
FRONT WHEEL ALIGNMENT, WHEEL
ALIGNMENT ANGLES, TSN, SPECIAL TOOLS ..... 21 - C



Group 22 - Front and rear brakes

BRAKING SYSTEM, PEDAL UNIT, BRAKE
MASTER CYLINDER ..... 22 - D
BRAKE PIPE SYSTEM,
BRAKING CORRECTOR, BRAKE SERVO,
VACUUM SYSTEM ..... 22 - E
FRONT DISC BRAKES (ATE CALIPERS) ..... 22 - F
REAR DRUM BRAKES, HAND-BRAKE ..... 22 - G
REAR DISK BRAKES (MODELS WITH A.B.S.) ..... 22 - H
ANTI-LOCK BRAKING SYSTEM (A.B.S.),
CHECKING LEVEL OF THE BRAKE/CLUTCH FLUID,
REPLACING BRAKE FLUID, BLEEDING AIR FROM
THE BRAKE SYSTEM ..... 22 - I
TSN, SPECIAL TOOLS ..... 22 - L



Group 23 - Steering

STEERING WHEEL AND COLUMN, STEERING LINKAGE ..... 23 - M
STEERING RACK ..... 23 - N
POWER STEERING RACK UNIT ..... 23 - O
POWER STEERING RACK UNIT (For 33 TD Intercooler and
SW TD Intercooler versions), TSN, SPECIAL TOOLS ..... 23 - P



Group 25 - Rear suspension

REAR SUSPENSION, REAR WHEEL ALIGNMENT,
REAR WHEEL CAMBER AND TOE-OUT
(For 4x2 versions) ..... 25 - Q
REAR SUSPENSION, REAR WHEEL ALIGNMENT,
REAR WHEEL CAMBER AND TOE-OUT
(For 4x4 versions) ..... 25 - R
REAR WHEEL HUBS, TSN, SPECIAL
TOOLS ..... 25 - S



Group 28 - Wheels and tires

TYRES, TSN ..... 28 - T

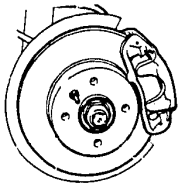

PA0371101

FRONT SUSPENSION

WHEEL HUB FRONT

FRONT SUSPENSION

ASSEMBLY ..... 21 - 1
DESCRIPTION ..... 21 - 2

FRONT WHEEL HUBS

ASSEMBLY ..... 21 - 3
REMOVAL ..... 21 - 4
DISMANTLING ..... 21 - 6
INSPECTION AND CHECKING, RE-ASSEMBLY ..... 21 - 8
REPLACEMENT ..... 21 - 10

FRONT SUSPENSION

ASSEMBLY

1 Coil spring
2 Steering arm
3 Shock absorber guide tube
4 CV joint gaiter
5 Drive-shaft
6 Suspension arm
7 Strut
8 Ball joint
9 Hub bracket
10 Hub cap
11 Bearing
12 Hub nut
13 Wheel hub
14 Wheel bolts
15 Brake disk
16 Sheild
17 Road wheel

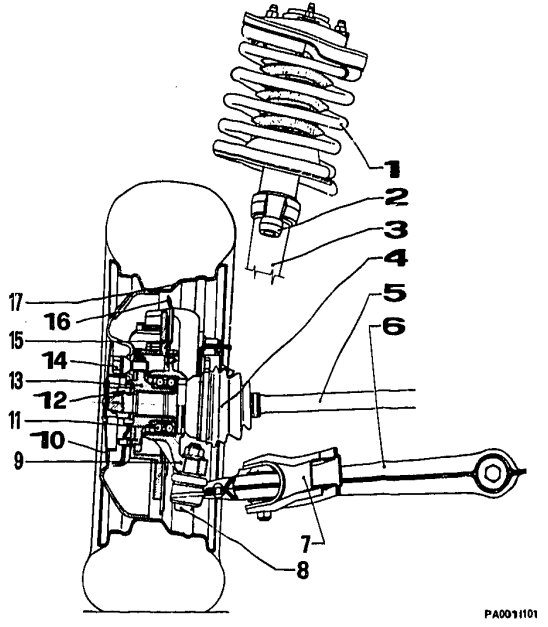

PA001101

DESCRIPTION

The front suspension is of the independent transverse arm and coaxial coil spring type, with lower struts and telescopic steering tubes.
The telescopic steering tubes are integral with the shock absorbers, of double tube type with diaphragm valve and non-emulsioning oil, and the steering arms.
Suspension movement is limited by progressive elastic buffers inside the guide tubes.
The shock absorbers support the lower coil spring seating via a roller bearing.

The use of this bearing (1) prevents the rod from rotating inside the shock absorber.
This system eliminates sticking, and makes it easier for the rod to slide when steering.

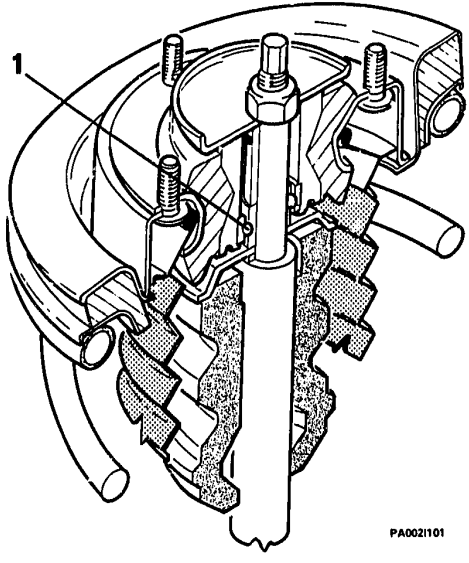

PA002I101

FRONT WHEEL HUBS

ASSEMBLY

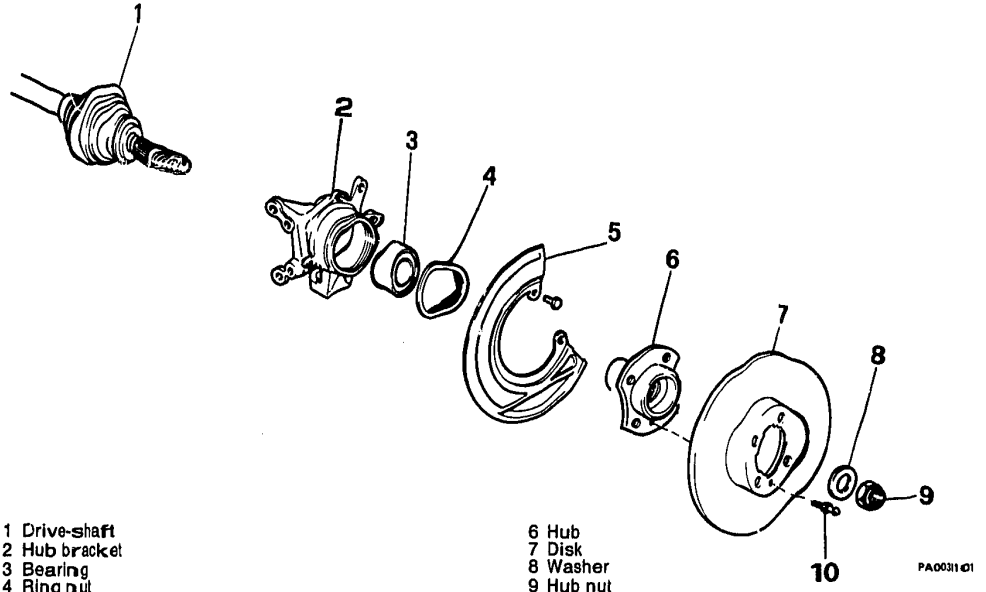

1 Drive-shaft
2 Hub bracket
3 Bearing
4 Ring nut
5 Shield
6 Hub
7 Disk
8 Washer
9 Hub nut
10 Centering pin

REMOVAL

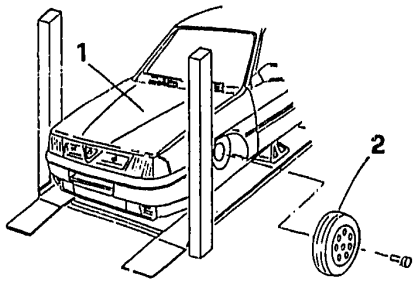

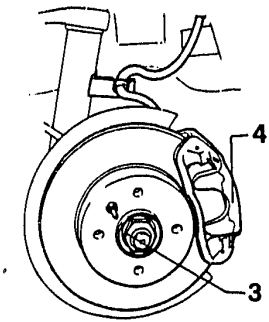

PB0041101

1. Position the vehicle on a hydraulic lift, choc the rear wheels and jack the front end, then support the vehicle on axle stands placed under the jacking points.
2. Remove the road wheel from the working side.
3. Open up the nut peening and unscrew it from the end of the drive-shaft.
4. Remove the brake caliper assembly complete from the hub bracket, without disconnecting the brake hose.

⇩

REMOVAL (continued)

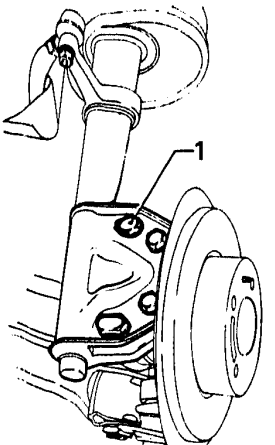

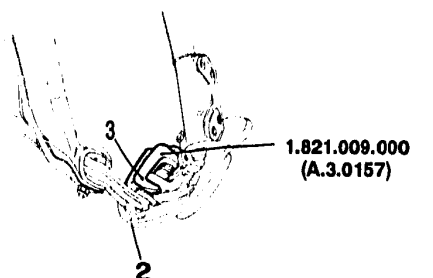

1. Remove the four bolts holding the vertical suspension guide to the hub bracket.
2. Open the lock tab, and remove the nut from the transverse arm ball joint.

Do not re-use the nut when re-assembling.

3. Support the hub bracket and using tool No. 1.821.009.000 (A.3.0157) extract the ball joint pin.

DISMANTLING

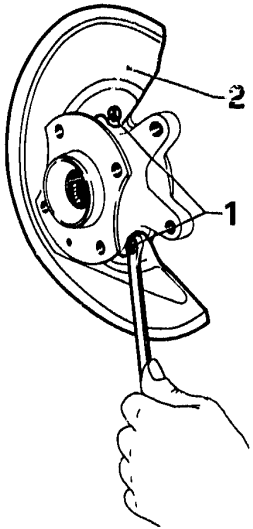

- Clamp the hub bracket in a vice fitted with protective jaw grips.
- Unscrew the centering oin and remove the brake disk.

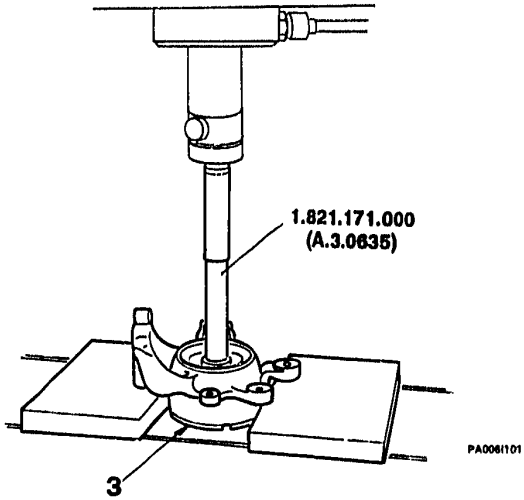

1. Remove the dust shield bolts.
2. Remove the dust shield from the hub bracket.
3. Using a press, mandrel N° 1.821.171.000 (A.3.0635) and the aid of two plates, extract the hub from its bracket.



DISMANTLING (continued)

- Refit the hub bracket in a vice (with jaw protectors), and using a punch open up the double peenings on the bearing retaining ring-nut.
  Using octagonal wrench N° 1.822.106.000 with a suitable extension, unscrew the ring-nut and remove it.
1. Using the press with extractor tool N° 1.821.099.000 (A.3.0430), and baseplate N° 1.821.149.000 (A.3.0584), extract the bearing from the hub bracket.
- Replace the hub in the vice, and using a suitable tool, remove the bearing inner shell.

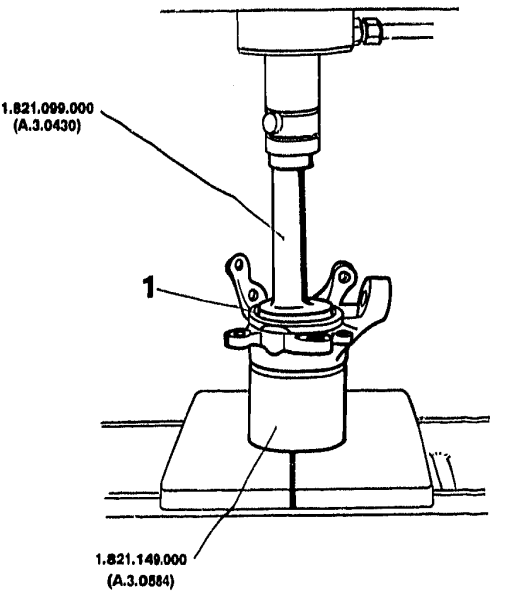

PA00711 01

INSPECTION AND CHECKING, RE-ASSEMBLY

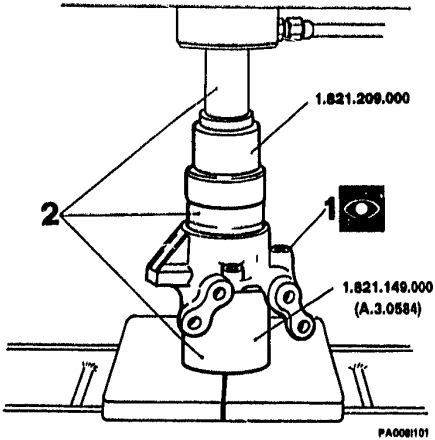

1. Carefully clean the hub and bracket and inspect their surfaces for damage. If necessary, replace the defective parts.
- The complete bearing, ring-nut and seal must in any case be substituted.
2. Using a press, insertion tool No. 1.821.209.000 and baseplate N° 1.821.149.000 (A.3.0584), fit a new bearing into the hub bracket.

22,5 ÷ 24,5 Nm
(2,3 ÷ 2,5 Kgm)

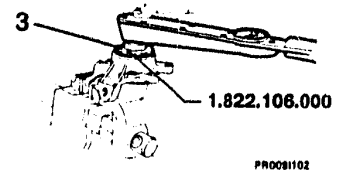

3. Set the hub bracket in a vice (with jaw protectors), introduce a new ring-nut and use the octagonal wrench No. 1.822.186.000 to screw it into the seating in the bracket, tightening down to the specified torque, and peening it over into the recesses in the bracket.

RE-ASSEMBLY (continued)

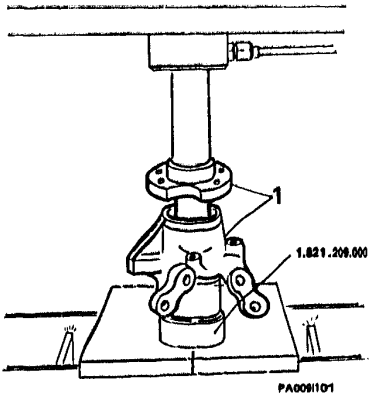

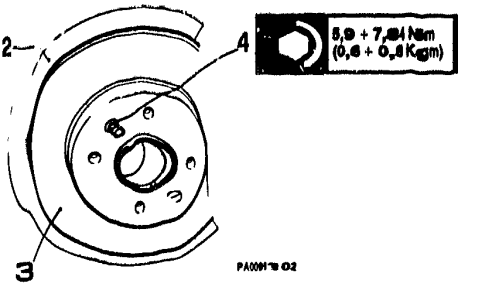

1. Using a press with tool N° 1.821.209.000, guide the hub into its relative bracket.
- Clamp the bracket in a vice (with protective jaw grips).
2. Fit the dust shield.
3. Fit the brake disk.
4. Fit the centering pin.

REPLACEMENT

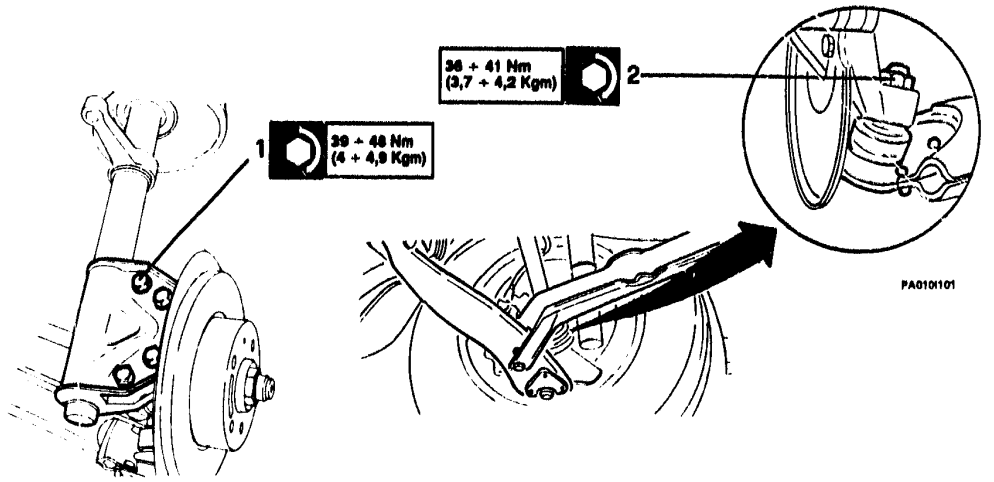

- Refit the hub and bracket assembly to the vehicle in the reverse order of removal.

1. Tighten the hub bracket bolts to the specified torque.
2. Tighten the ball-joint nut to the specified torque

REPLACEMENT (continued)

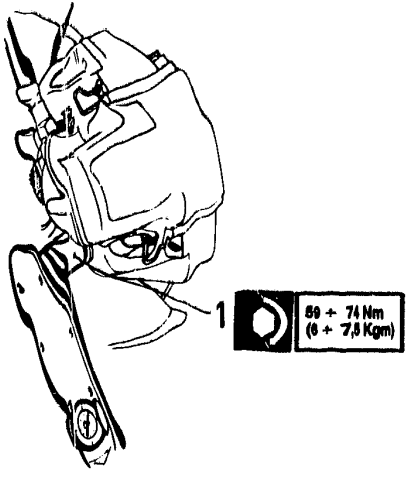

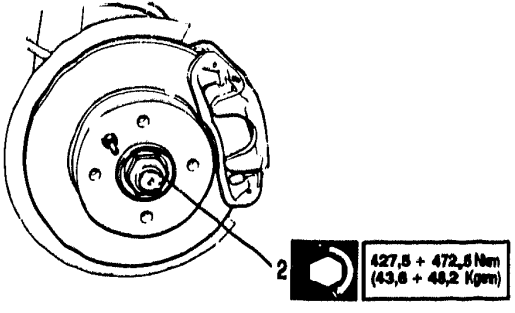

- Peen over the transverse arm ball-joint nut onto the square end of the joint pin.

1. Refit the brake caliper to the hub bracket, tightening the mounting bolts to the specified torque.

2. Lock the drive-shaft to the hub as follows:

a) Clean the mating threads.

b) Apply 3 or 4 drops of locking compound such as "Loctite 270" to the threads at 4 - 6 mm from the end.

c) Thread on the nut within 5 minutes of applying the locking compound.

d) Peen over the nut collar into the slot in the shaft.

e) Wait at least 150 minutes before re-using the vehicle.

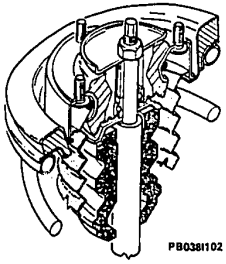
PB038I102

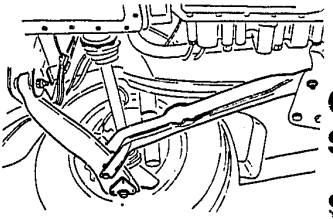
PB038I101

COIL SPRING AND SHOCK ABSORBERS

STRUT AND TRANSVERSE ARM

COIL SPRING AND SHOCK ABSORBERS

Mc PHERSON UNIT ASSEMBLY ..... 21 - 12
REMOVAL AND REPLACEMENT ..... 21 - 13
DISMANTLING ..... 21 - 15
INSPECTION AND CHECKING ..... 21 - 18
RE-ASSEMBLY ..... 21 - 19

STRUT AND TRANSVERSE ARM

REMOVAL ..... 21 - 20
INSPECTION AND CHECKING ..... 21 - 22
REPLACEMENT ..... 21 - 23

COIL SPRING AND SHOCK ABSORBERS
MC PHERSON UNIT ASSEMBLY

1 Bellows
2 Stop buffer
3 Lower washer
4 Coil spring
5 Elastic bush assembly
6 Upper washer
7 Cup
8 Seal
9 Ring washer
10 Self-locking nut

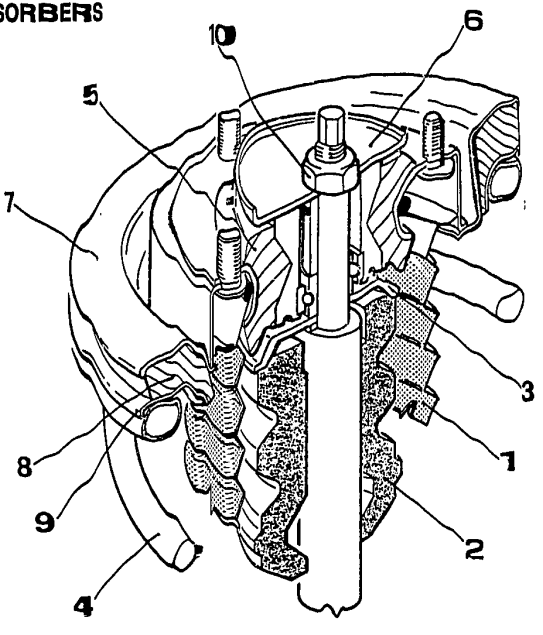

REMOVAL AND REPLACEMENT

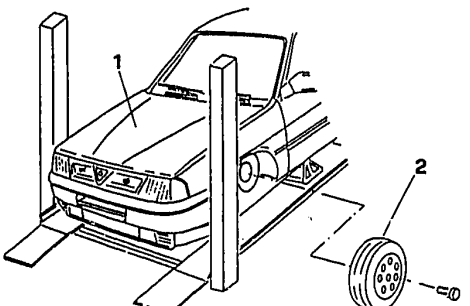

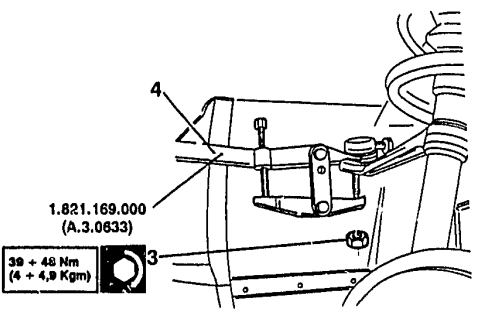

1. Position the vehicle on a hydraulic lift, choc the rear wheels and jack the front, then sopport it on axle stands placed under the jacling points.
2. Remove the wheel bolts and road wheel.
3. Remove the tie-rod to steering arm ball-joint nut.
4. Using extractor N° 1.821.169.000 (A.3.0633), pull the ball joint upwards out of the steering arm.

⇩

REMOVAL AND REPLACEMENT (continued)

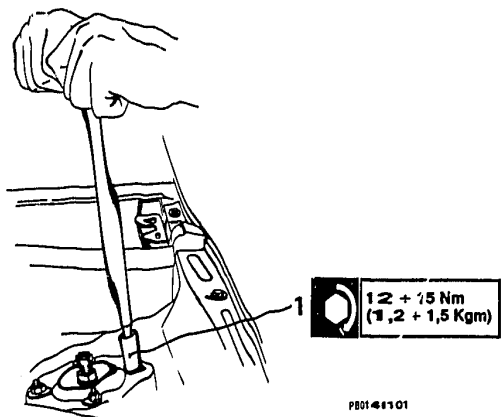

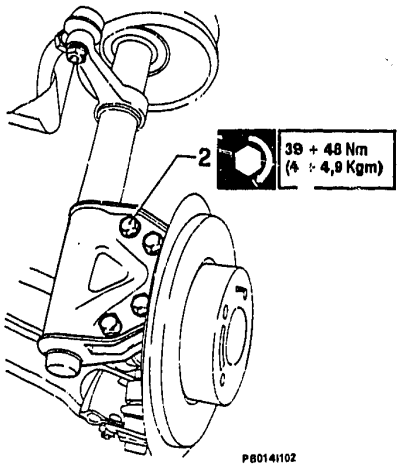

1. Working from the engine bay, remove the four suspension spring unit mounting nuts.

2. Support the spring assembly and remove the four bolts holding it to the hub bracket.

DISMANTLING

- Clamp the spring assembly in a vice.
1. Fit the spring compression tool N° 1.820.026.000 (A.2.0251) and progressively compress the spring until the upper ring washer is freed.

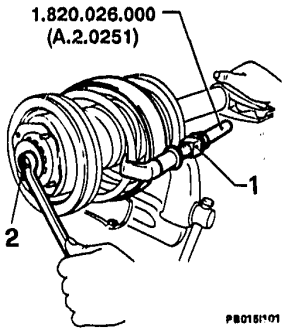

The spring must be compressed only by the minimum that allows the upper ring washer to revolve with relative seal and cup.
Make sure that the compression tool is well attached to the spring coil and lower washer at all times during compression.

2. Remove the shock absorber nut.

DISMANTLING (continued)

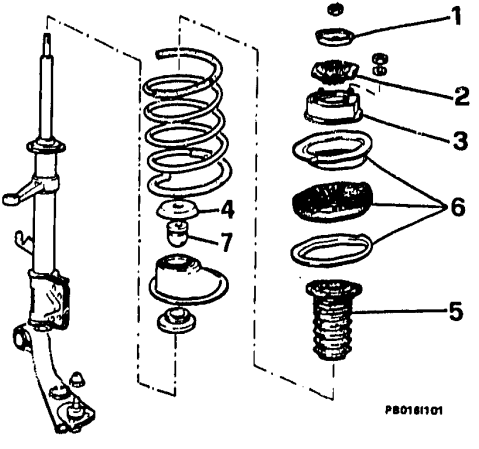

1. Remove the upper washer.
2. Extract the elastic bush complete with bearing.
3. Extract the container cup complete.
4. Remove the lower washer.
5. Withdraw the bellows.
6. Extract the spring gasket with relative cup and pan washer.
7. Extract the stop buffer.

DISMANTLING (continued)

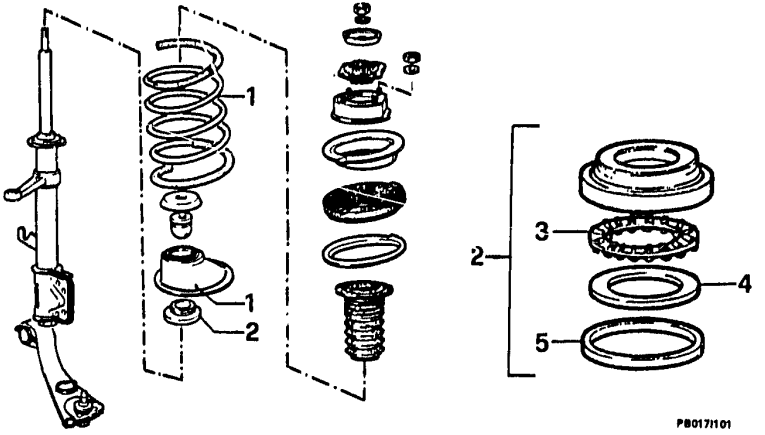

1. Extract the spring with relative lower washer attached to the spring compressor.
- If necessary, slowly release the spring from the tool, then separate it from the lower pan washer.
2. Remove the support ring from the lower spring pan washer.

Before dismantling the support ring - pan washer assembly, number and mark the components to ensure correct re-assembly.
Mark the lower pan washers to identify them on re-assembly.

3. Remove the thrust roller bearings.
4. Remove the fifth wheel.
5. Remove the lower oil seal.

INSPECTION AND CHECKING

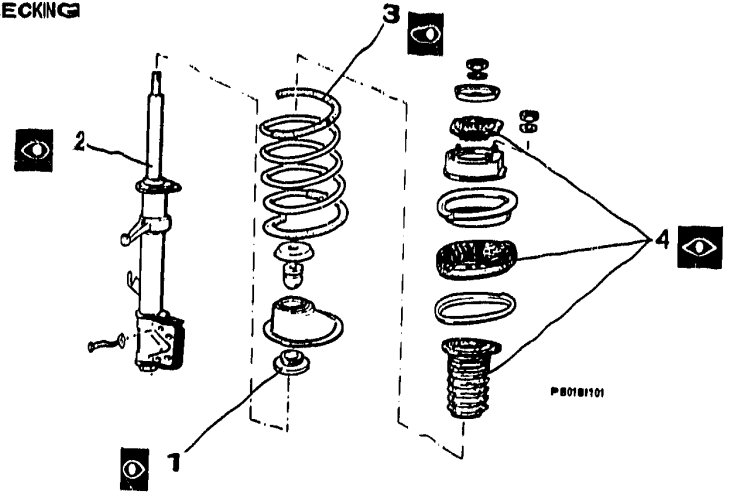

1. Make sure that the self-lubricating bushes incorporated in the upper and lower pan washer support rings in the spring assembly do not show signs of excessive wear, confirmed by the presence of metal dust on the bearing surface.
2. If necessary, test the shock absorbers (incorporated in the vertical guides) against their set specifications. If they are inefficient or lose oil, replace them.
3. Inspect the springs for defects.
4. Replace all rubber elements which are distorted, damaged or aged.

RE-ASSEMBLY

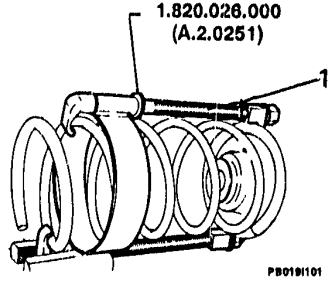

- Using the specified grease, lubricate the seal and thrust bearing for the spring lower pan washer support ring.

AGIP Grease 33 FD
Ip Autogrease FD

- Re-assembly all the components for the support ring on the guide tube, respecting the position and order marked when dismantling.

1. If previously removed, refit tool N° 1.820.026.000 (A.2.0251) to the spring and lower pan washer, and with the tool held in a vice, compress the spring just enough to be able to perform the subsequent re-assembly operation.
- Refit the remaining elements in the spring assembly, in the reverse order of dismantling, and tighten the top nut to the specified torque.

Tightening torque Suspension spring assembly top nut
34 ÷ 48 Nm (3,5 ÷ 4,9 kgm)

STRUT AND TRANSVERSE ARM
REMOVAL

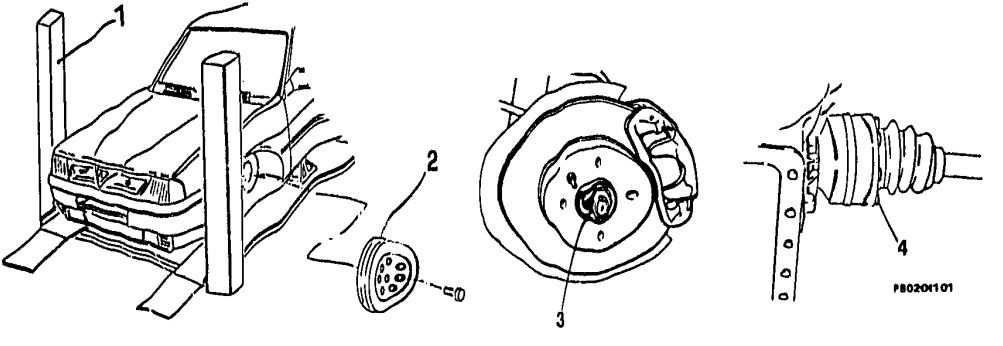

1. Position the vehicle on a hydraulic lift.
- Support the front with axle stands in the jacking points, and chock the rear wheels.
2. Remove the road wheel from the working side.
3. Remove the wheel hub nut.
4. Disconnect the axleshaft from the gearbox shaft by loosening the six screws and remove the axleshaft.

REMOVAL (continued)

1. Open up the peening and remove the transverse arm ball-joint nut.
- Do not re-use the nut.
- Using tool N° 1.821.009.000 (A.3.0157), pull the joint out.
2. Remove the strut mounting bolt from the engine cross-member.
3. Remove the transverse arm mounting bolt.
4. Remove the strut.
5. Undo the bolt holding the transverse arm to the body, and remove the arm.
- Check the elastic joints, and if required extract the elastic joints from the transverse arms and struts with suitable tools.

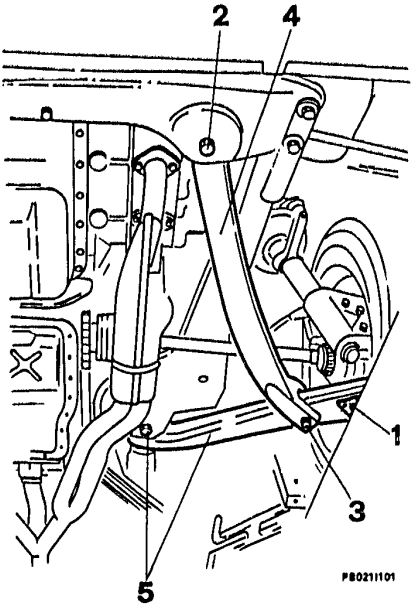

INSPECTION AND CHECKING

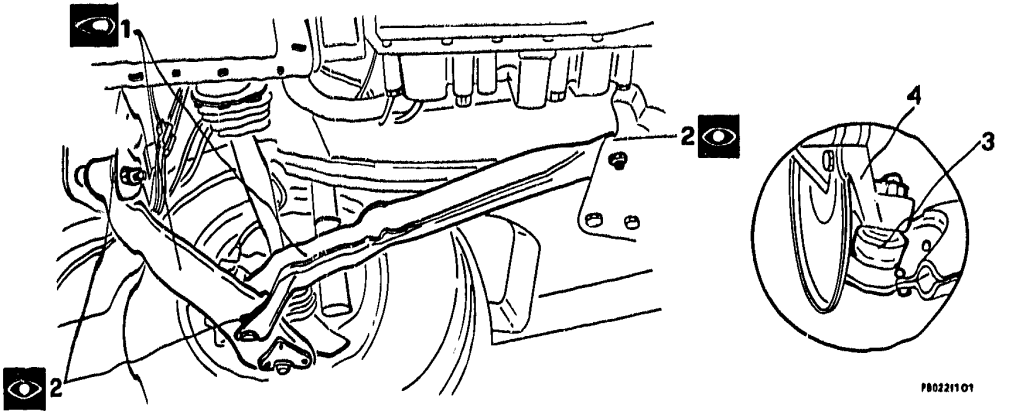

1. Check condition of transverse arms and struts.
2. Examine the elastic bushes.
3. Make sure that the ball-joint rotates in its seat without sticking and without noticeable play.
4. Only the threaded part of the ball-joint pin should protrude from its seat in the hub bracket; if this is not the case, the hub bracket must be replaced.

Do not get oil or grease on the elastic joints.

REPLACEMENT

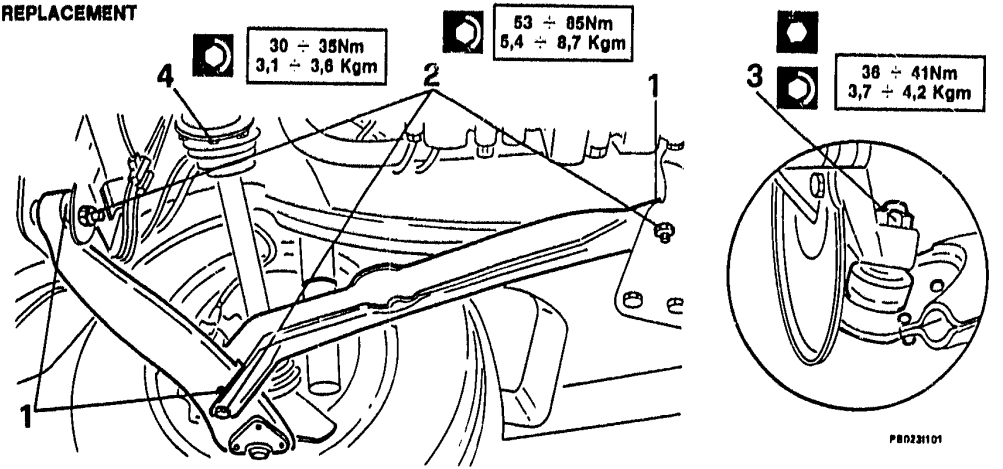

- If previously removed, refit the elastic joints, introducing them from the chamfered side.

1. To ease joint introduction, lubricate their outer surfaces with the specified product.

MILLOIL Rubber lubricant
UNION CARBIDE CHEMICALS
COMPANY: Ucon Lubricant 50 HB-5100

2. Refit the struts and transverse arms to the body in the reverse order of removal.
3. Peen over the ball-joint nut.
4. Refit the driveshaft and tighten the screws, securing it to the gearbox shaft, to the correct torque.

REPLACEMENT (continued)

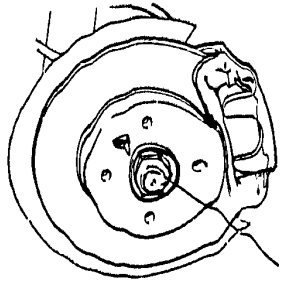

427,5 ÷ 472,5 Nm
(43,6 ÷ 48,2 Kgm)

1. Lock the axle shaft to the hub support as follows:
a) Clean the thread of the coupling.
b) Apply 3 or 4 drops of "Loctite 270" adhesive to the thread starting from 4 - 6 mm from the end.
c) Tighten the nut within five minutes of applying the adhesive.
d) Caulk the collar of the nut at the side of the notch on the coupling.
e) Wait at least 150 minutes before using the vehicle.

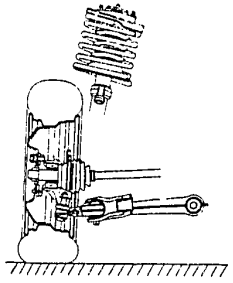

FRONT WHEEL ALIGNMENT

WHEEL ALIGNMENT ANGLES

TECHNICAL SPECIFICATIONS AND NOTES

SPECIAL TOOLS

FRONT WHEEL ALIGNMENT ..... 21 - 25
WHEEL ALIGNMENT ANGLES
TOE-OUT ..... 21 - 29
CAMBER ANGLES ..... 21 - 30
CASTER ANGLES ..... 21 - 31
MAXIMUM STEERING ANGLES ..... 21 - 32

TECHNICAL SPECIFICATIONS AND NOTES
COIL SPRINGS ..... 21 - 33
SHOCK ABSORBERS ..... 21 - 34
FLUIDS AND LUBRICANTS ..... 21 - 35
TIGHTENING TORQUES ..... 21 - 36
SPECIAL TOOLS ..... 21 - 37

FRONT WHEEL ALIGNMENT

- Carry out the following preliminary operations.
a. Set up the vehicle in running order, with full fuel tank and spare wheel aboard.
b. Make sure the tire pressures meet specifications (see UN. 28).
c. Place the vehicle on a hydraulic lift.
d. Load vehicle, arranging the weights as shown.
e. Rock the vehicle on its suspension a few times.

Static load equivalent to three passengers plus baggage Passenger equivalent
A + B = 490 + 245 = 735 N (50 + 25 = 75 kg)
C = 490 N (50 kg)

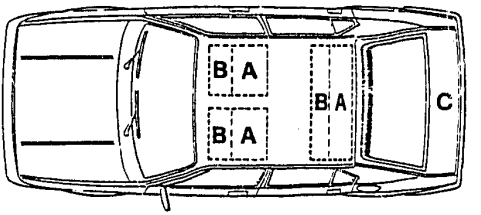

PA012N101

FRONT WHEEL ALIGNMENT (Continued)

MODELS	F = b - a
4x2 (8 valves, 16 valves)	-12 $^{+10}_{-5}$
	-22 $^{+10}_{-5}$ (1)
4x4	-12 $^{+10}_{-5}$
	-22 $^{+10}_{-5}$ (1)

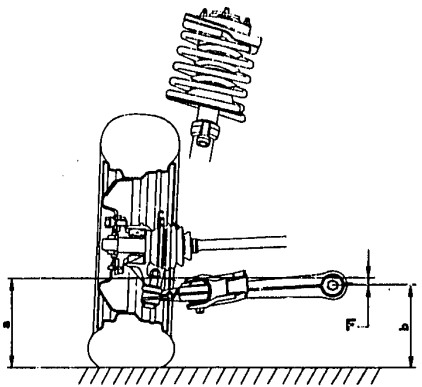

(1) Starting from June 1991

- Check the front trim by measuring the value F obtained by tracing two parallel lines on the floor passing through points "a" and "b" thus defined.

Point "a"
The intersection between the plane passing through the base of the nut connecting the hub support to the transversal arm and the tangent with the hub support.

Point "b"
Axis of the bolt securing the transversal arm to the body.

Value F must be measured for both the front right-hand suspension and for the front left-hand suspension.

FRONT WHEEL ALIGNMENT (continued)

MODELS	F = b - a
16V	-12 +10 -5
	-22 +10 -5 (1)
	-32 +10 -5 (2)
TURBODIESEL	-2 +10 -5
Permanent 4	-32 +10 -5

(1) From chassis N° 5630216
(2) Starting from February 1991

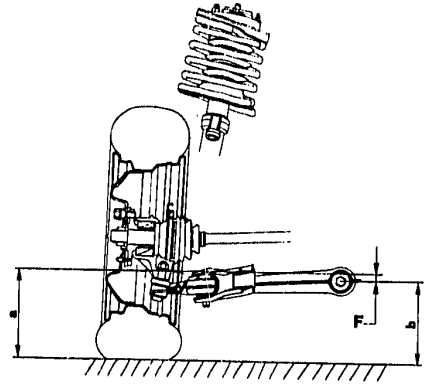

- Check the front trim by measuring the value F obtained by tracing two parallel lines on the floor passing through points "a" and "b" thus defined.

Point "a"
The intersection between the plane passing through the base of the nut connecting the hub support to the transversal arm and the tangent with the hub support.

Point "b"
Axis of the bolt securing the transversal arm to the body.

Value F must be measured for both the front right-hand suspension and for the front left-hand suspension.

FRONT WHEEL ALIGNMENT (continued)

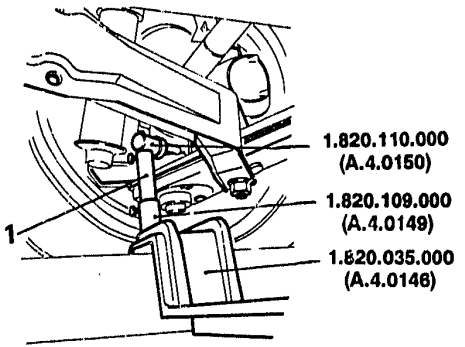

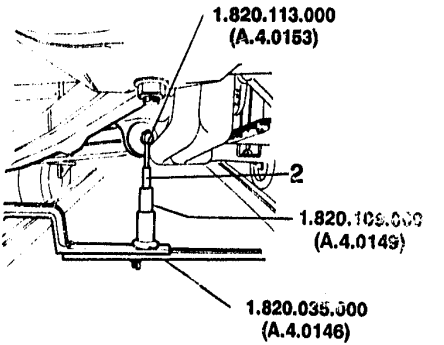

1. Take the measurement at **point "a"** using straight-edge N° 1.820.035.000 (A.4.0146), alignment checking tool N° 1.820.109.000 (A.4.0149) and probe No 1.820.110.000 (A.4.0150), with the graduated mobile part of the checking tool in its completely closed position.

2. Carry out the measurement at **point "b"** using straight edge N° 1.820.035.000 (A.4.0146), alignment checking tool N° 1.820.109.000 (A.4.0149) and magnetic reduction N° 1.820.113.000 (A.4.0153), and moving only the alignment tool graduated rod.

- Read the value of wheel alignment F directly from the graduated scale on the alignment tool sliding rod.

WHEEL ALIGNMENT ANGLES

TOE-OUT

PETROL	DIESEL
L = 1/2 M + 2 ± 1	L = 1/2 M + 1 ± 1
H = M + 4 ± 2	H = M + 2 ± 2

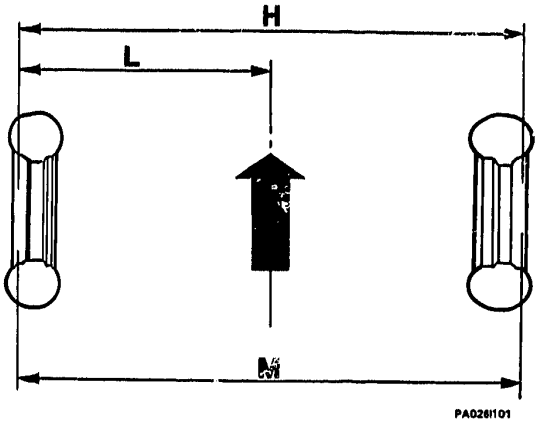

- Check vehicle wheel alignment
- Work on one side of the suspension by adjusting a tie rod until distance L is obtained.
- Then adjust the opposite tie rod until distance H is obtained.

- Tighten the tie-rod adjusting nuts to the specified torque.

55 ÷ 69 Nm
(5,6 ÷ 7 Kgm)

- Correct the steering wheel spoke position, removing it from the column and refitting it with ± 5° tollerance for the central spoke.

CAMBER ANGLES

MODELS	α
4x2 (8 valves, 16 valves)	1°14' ± 30'
4x4	1°14' ± 30'
16V Φ	- 1°28' ± 30'
TURBODIESEL	- 1°55' ± 30'
Permanent 4	- 1°28' ± 30'

Maximum difference between LH and RH camber angles is 1°.

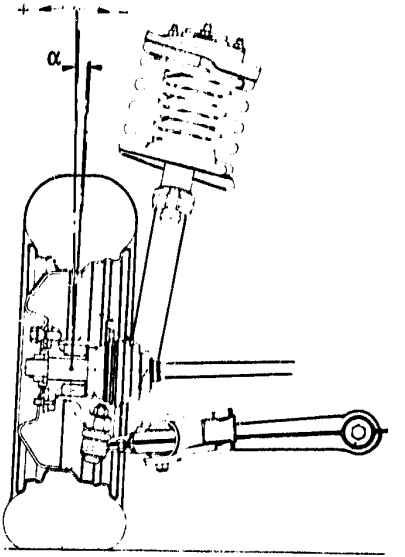

PA027I1101

CASTER ANGLES

MODELS	β
4x2 (8 valves, 16 valves)	+2° ± 30'
4x4	+2 ± 30'
16V	+1° 59'
TURBODIESEL	+1° ± 30'
Permanent 4	+1° 59'

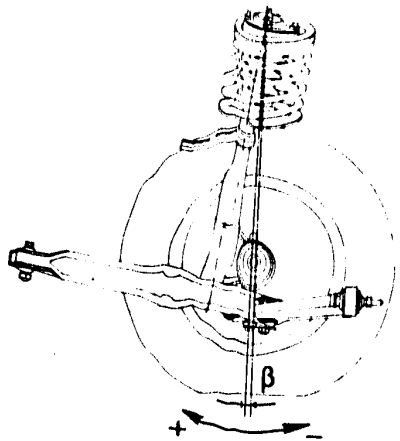

Maximum difference between LH and RH caster angles is 1°.

MAXIMUM STEERING ANGLES

MODELS	MECHANICAL STEERING	POWER STEERING
4x2 (8 valves, 16 valves)	γ = 27° 50' δ = 33° 45'	γ = 27° 57' δ = 33° 29'
4x4	γ = 27° 50' δ = 33° 45'	γ = 27° 57' δ = 33° 29'
16V Φ	-	γ = 28° 13' δ = 33° 58'
TURBODIESEL	-	γ = 27° 55' δ = 33° 27'
Permanent 4	-	γ = 28° 13' δ = 33° 58'

γ = outer steering angle
δ = inner steering angle

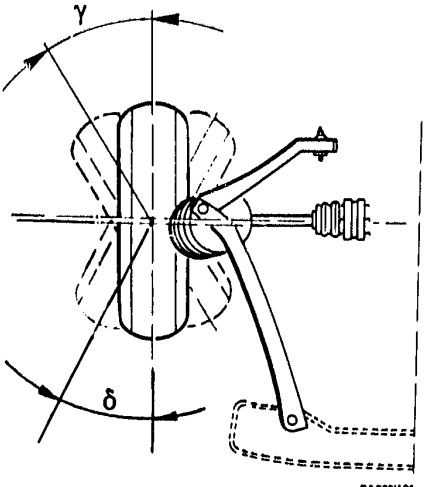

PA029I101

TECHNICAL SPECIFICATIONS AND NOTES

COIL SPRINGS

DATA \ MODELS		- 4x2 (8 valves and 16 valves) - 4x4 selectable (8 valves and 16 valves)	- 16V i.e. - 4x4 (permanent)	TURBODIESEL
Diameter of coiled rod	mm	12,8	12,8	14,5
Outer spring diameter	mm	172,8	172,8	174,5
Total No. of turns		4,75	4,75	5,75
Flexibility	mm/kg	0,50	0,50	0,395
Free lenght	mm	321	311	335

SHOCK ABSORBERS

VERSIONS / DATA	- 4x2 (8 valves and 16 valves) - 4x4 selectable (8 valves and 16 valves)		- 16V - 4x4 (permanent)	TURBODIESEL
Type of shock absorbers	HYDRAULIC		HYDRAULIC	HYDRAULIC
Manufacturer	BOGE	WAY-ASSAUTO	BOGE	BOGE
Identification colour	RED		YELLOW	LIGHT-BLUE
Diameter of stem mm	20		20	20
Stroke mm	177,5		177,5	185,2

FLUIDS AND LUBRICANTS

APPLICATION	TYPE	PRODUCT	QTY
Lower spring pan washer support ring seal and thrust bearing	GREASE	AGIP: Grease 33 FD IP: Autogrease FD	–
Hub bracket oil seal, outer surface	OIL	AGIP: Rotra MP SAE 80W90 IP: Pontiax HD 80W90 TUTELA W90/M-DA	–
Suspension arm and strut elastic joints	GREASE	MILLOIL: Rubber lubricant UNION CARBIDE CHEMICALS COMPANY: Ucon Lubricant 50 HB-5100	–

TIGHTENING TORQUES

COMPONENT \ UNITS	N.m	kg.m
Hub bracket bearing ring-nut	222,5 ÷ 274,5	22,7 ÷ 28
Suspension spring assembly top nut	34 ÷ 48	3,5 ÷ 4,9
Suspension guide bracket bolts (to hub bracket)	39 ÷ 48	4 ÷ 4,9
Suspension guide nut (to body)	12 ÷ 15	1,2 ÷ 1,5
Steering arm ball-joint nut	39 ÷ 48	4 ÷ 4,9
Transverse arm ball-joint nut	36 ÷ 41	3.7 ÷ 4,2
Centering pin	5,9 ÷ 7,84	0,6 ÷ 0,8
Brake caliper mounting bolts	59 ÷ 74	6 ÷ 7,5
Arm and strut mounting bolts	53 ÷ 85	5,4 ÷ 8,7
wheel hub nut (to drive-shaft)	427,5 ÷ 472,5	43,6 ÷ 48,2
Track adjusting nuts on tie-rods	55 ÷ 69	5,6 ÷ 7,0
Drive-shaft bolts (to differential output shaft)	30 ÷ 35	3,1 ÷ 3,6

SPECIAL TOOLS

1.820.026.000 (A.2.0251)	Spring compressor	 PA034I101
1.820.035.000 (A.4.0146)	Front wheel alignment rod	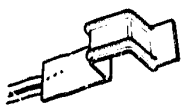 PA034I102
1.820.109.000 (A.4.0149)	Wheel alignment tool	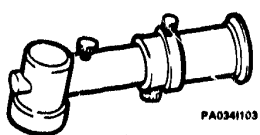 PA034I103
1.820.110.000 (A.4.0150)	Wheel alignment probe	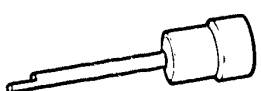 PA034I104

⇩

1.820.113.000 (A.4.0153)	Magnetic reduction for front wheel alignment reading	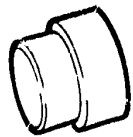 PA038I101
1.921.169.000 (A.3.0633)	Steering arm ball-joint extractor	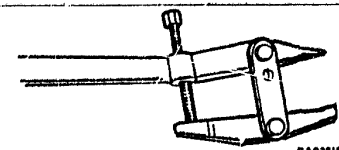 PA038I102
1.821.009.000 (A.3.0157)	Hub bracket ball-joint extractor	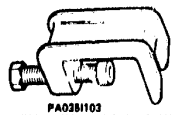 PA038I103
1.821.099.000 (A.3.0430)	Hub bracket bearing extractor	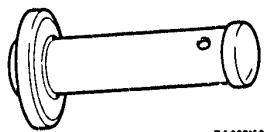 PA038I104

⇩

1.821.149.000 (A.3.0584)	Hub bearing insertion extraction base	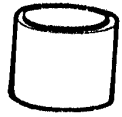 PA0361101
1.821.171.000 (A.3.0635)	Drift for extracting hub from bracket	 PA0361102
1.821.209.000	Hub bearing insertion tool	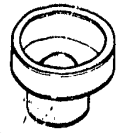 PA0361103
1.822.106.000	Front wheel hub bearing ring-nut wrench	 PA0361104

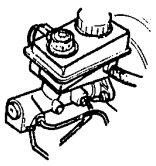

PA074L102

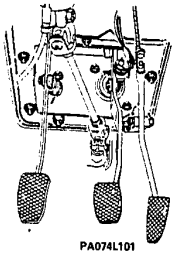

PA074L101

BRAKING SYSTEM

PEDAL UNIT

BRAKE MASTER CYLINDER

BRAKING SYSTEM

BRAKING SYSTEM CHART ..... 22 - 1
DESCRIPTION ..... 22 - 2

PEDAL UNIT

ASSEMBLY ..... 22 - 3
REMOVAL ..... 22 - 4
DISMANTLING ..... 22 - 7
INSPECTION, CHECKING AND REASSEMBLY ..... 22 - 8
REPLACEMENT ..... 22 - 9

BRAKE MASTER CYLINDER

ASSEMBLY ..... 22 - 11
REMOVAL ..... 22 - 12
DISMANTLING, INSPECTION AND CHECKING ..... 22 - 13
REASSEMBLY ..... 22 - 14
REPLACEMENT ..... 22 - 15

WARNING Certain parts covered in this unit may contain asbestos minerals.
Breathing asbestos dust is dangerous to health.
SEE NOTES IN INITIAL SYMBOL

ASBESTO1



BRAKING SYSTEM

BRAKING SYSTEM CHART

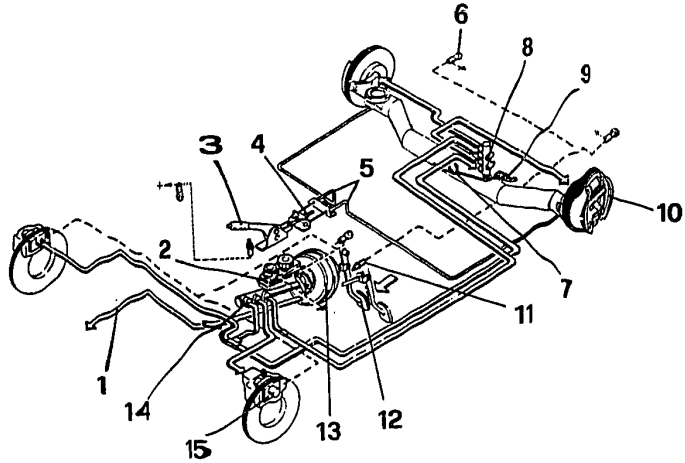

1 Vacuum pipe
2 Brake and clutch fluid reservoir
3 Handbrake lever
4 Handbrake adjuster
5 Handbrake cables
6 Stop lights
7 Braking corrector spring
8 Braking corrector
9 Braking corrector balance arm
10 Rear brake drum
11 Stop light switch
12 Brake pedal
13 Brake servo
14 Brake master cylinder
15 Front brake caliper

DESCRIPTION

- The braking system is hydraulic and features dual independent circuits for the front and back wheels. This arrangement guarantees efficient braking on at least one axle even in the event of faults in one of the circuits.
  Increased safety is provided by the Anti-lock Braking System (A.B.S.) MARK II fitted on reuest to electronic-injection models.
  The brake servo makes use of the vacuum created in the engine intake manifold to reduce the effort required to operate the master cylinder, which features two separate coaxial cylinders that feed the independent braking circuits.
- The rear wheel braking circuit includes a braking corrector which senses back-axle load variations and adjusts braking action to prevent wheel lock.
- The front brakes are of the disk type (ventilated on the 16-valve electronic injection models) with floating calipers and automatic piston return.
- The rear brakes are of the drum type and feature mechanical handbrake linkages and a shoe-return system which operates when the brake pedal is depressed.
  Where the A.B.S. system is featured, the rear wheels are fitted with disk brakes.



For **Permanent 4** vehicles. When measuring power or testing brakes, disconnect the winding - 30A - from the four-wheel drive power supply relay - I76 - located on the left-hand side of the services tank identified by a blue relay holder connector.

PEDAL UNIT
ASSEMBLY

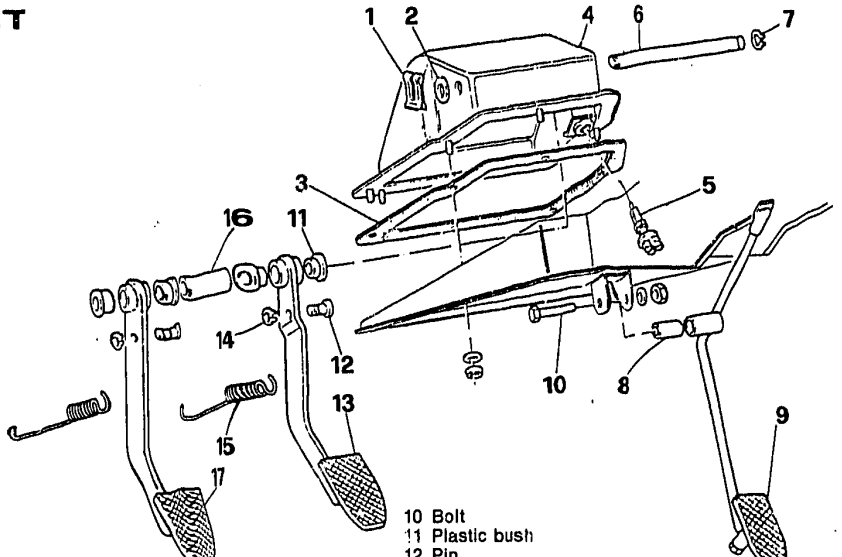

1 Spring
2 Washer
3 Gasket
4 Pedal unit casing
5 Stop light switch
6 Pivot
7 Circlip
8 Spacer
9 Accelerator pedal
10 Bolt
11 Plastic bush
12 Pin
13 Brake pedal
14 Circlip
15 Spring
16 Spacer
17 Clutch pedal

REMOVAL

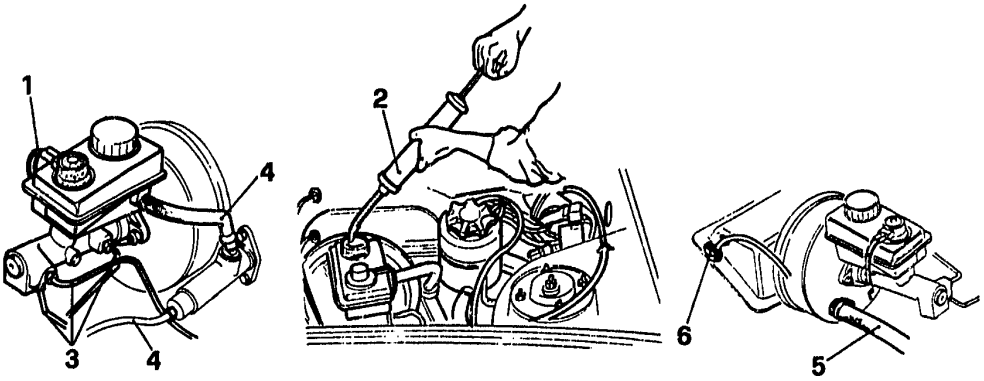

PA004L101

1. Disconnect the electrical leads
2. Extract the hydraulic fluid.
3. Undo the brake pipe unions.
4. Disconnect the pipes from the brake master cylinder.
5. Disconnect the vacuum pipe from the brake servo
6. Remove the accelerator cable sheath stop plate.

REMOVAL (Continued)

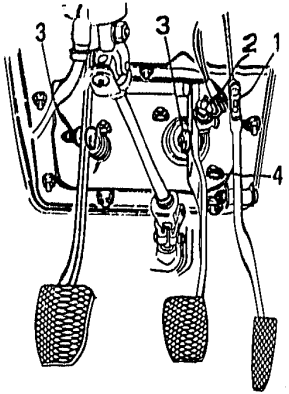

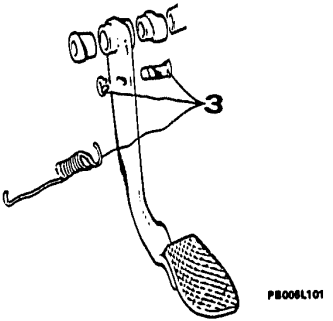

1. Disconnect the accelerator cable.
2. Disconnect the stop light switch.
3. Disconnect the brake and clutch pedals from their cylinder forks.
4. Undo the four mounting bolts and free the brake servo unit.



REMOVAL (Continued)

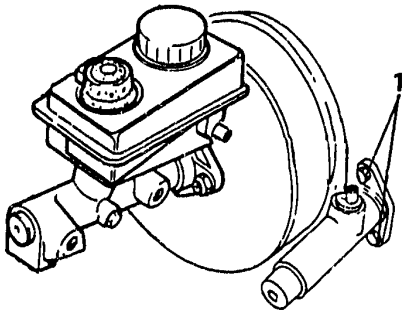

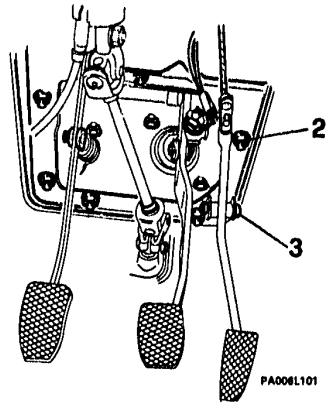

1. Remove the clutch master cylinder.
2. Remove the six pedal unit mounting bolts and remove the unit from the engine bay.
3. If necessary, remove the accelerator pedal from its pivot by undoing the relative bolt.

DISMANTLING

1. Remove the clip and washer.
2. Withdraw the pin.
3. Recover the pedal and spacer.
4. Remove the plastic bushes from the pedals.
5. Remove the stop light switch.

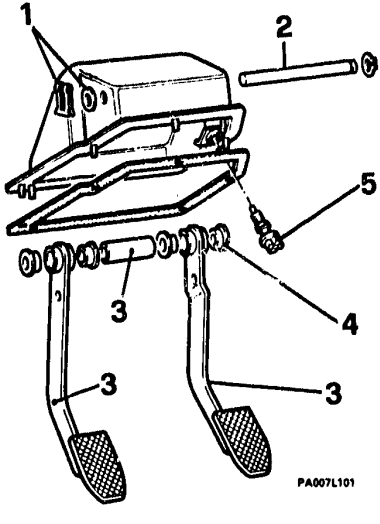

INSPECTION, CHECKING AND REASSEMBLY

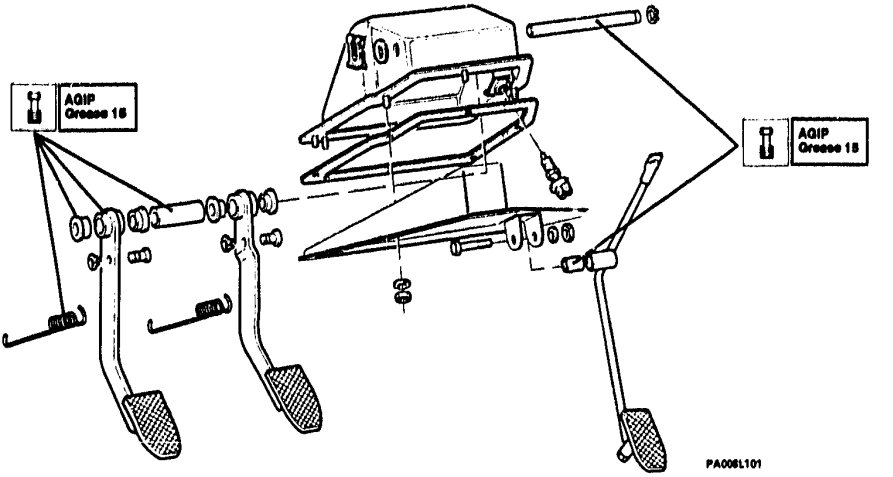

Check the conditio of all components.

- Reassemble in the reverse order of dismantling, applying a film of grease to the parts where shown.

REPLACEMENT

- Proceed in the reverse order of removal, following the instructions below:

Make sure that the accelerator pedal is free to move without sticking after the bolt has been tightened to the specified torque.

1. Lubricate the end of the accelerator cable before connecting it to the pedal. Fit the cable clamp and adjust the cable travel (see UN.04).

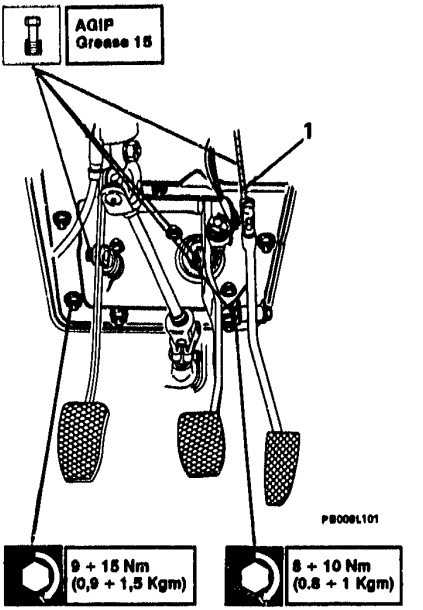

REPLACEMENT (Continued)

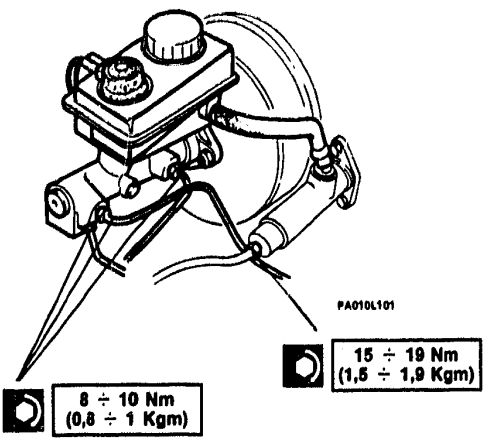

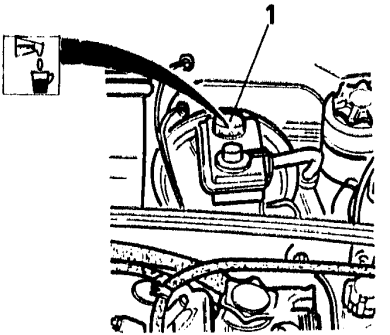

1. Refill the brake-clutch fluid reservoir to the MAX mark using the specified fluid (see TSN).

Bleed the air from the brake - clutch hydraulic system.

BRAKE MASTER CYLINDER

ASSEMBLY

1 Level indicator
2 Reservoir
3 Union
4 Seal
5 Spring
6 Backing disk
7 Spring
8 Washer
9 Gasket
10 Spacer
11 Middle piston
12 Gasket
13 Washer
14 Circlip
15 End washer
16 Gasket
17 Washer
18 Gasket
19 Bush
20 Plunger piston
21 Spacer
22 Gasket
23 Washer
24 Spring
25 Backing disk
26 Return spring
27 Stop screw
28 Washer
29 Cylinder body
30 Filter
31 Gasket
32 Plug

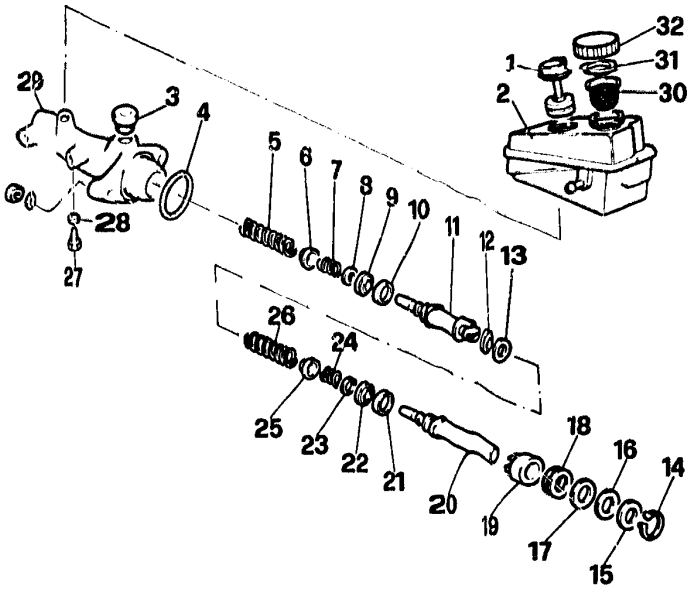

REMOVAL

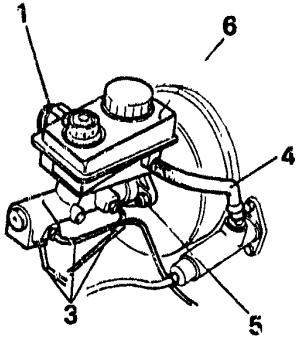

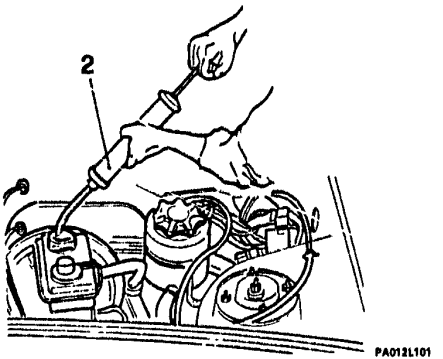

1. Disconnect the electric leads.
2. Extract the hydraulic fluid.
3. Undo the pipe unions.
4. Disconnect the clutch pump supply hose.
5. Remove the brake master cylinder.
6. Remove the reservoir from the master cylinder, recovering the rubber seals from the unions.

DISMANTLING, INSPECTION AND CHECKING

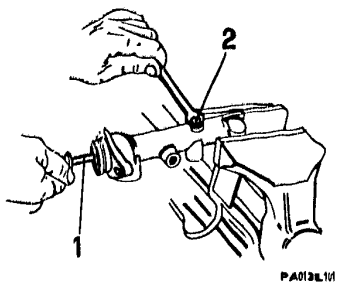

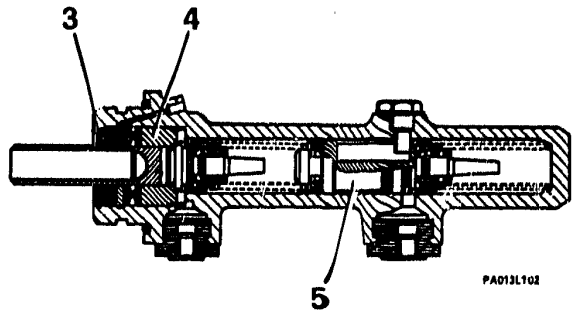

1. Using an appropriate tool, push the piston until it it touches the end of the pump body.
2. Undo the stop screw and remove it complete with washer.
3. Push the piston down and remove the seal.
4. Extract the piston assembly complete.
5. Withdraw the intermediate piston assembly complete.

- Carefully clean all parts with alcohol or brake fluid, and dry them with compressed air.

Inspect the cylinder bore for ridges or corrosion pits, and substitute it if necessary.

REASSEMBLY

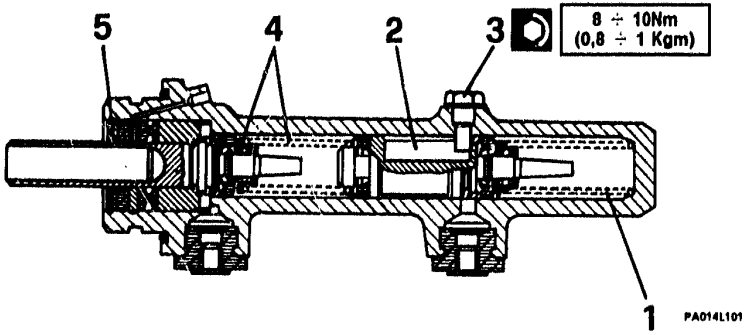

Make sure the gaskets are correctly orientated.

Use only original spares.

- Apply a film of the compound below to the cylinder bore and to all piston seals:

Bremszylinder Paste

1. Insert the spring.
2. Insert the preassembled intermediate piston with its channel pointing towards the stop screw.
3. Fit the screw to the torque specified.
4. Fit the preassembled piston assembly and spring.
5. Using a suitable tool, fit the circlip.

REPLACEMENT

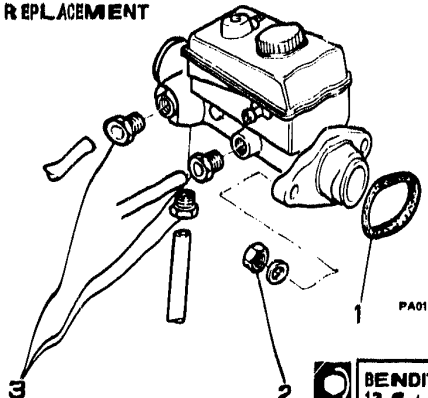

	8 ÷ 10 Nm (0,8 ÷ 1 Kgm)
	BENDITALIA 13,6 ÷ 15 Nm (1,4 ÷ 1,5 Kgm)
	ATE 21 ÷ 28 Nm (2,1 ÷ 2,9 Kgm)

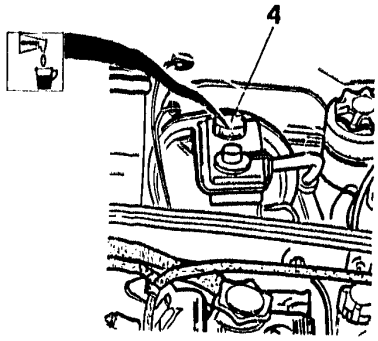

- Proceed in the reverse order of dismantling, observing the following instructions.

1. Make sure the seal is properly fitted in its groove on the flange.
2. Fit new union nuts and tighten the master cylinder to the braqke servo.
3. Tighten the brake pipe unions to the specified torques.
4. Refill the brake-clutch fluid reservoir to the MAX mark using the specified fluid (see TSN).

Bleed the brake circuit.

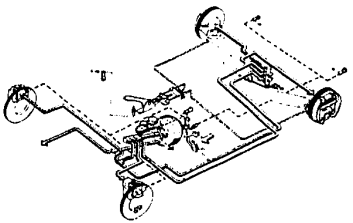

BRAKE PIPE SYSTEM

BRAKING CORRECTOR

BRAKE SERVO

VACUUM SYSTEM

BRAKE PIPE SYSTEM ..... 22 - 16
BRAKING CORRECTOR
REMOVAL ..... 22 - 17
REPLACEMENT ..... 22 - 19
BRAKE SERVO
REMOVAL ..... 22 - 21
INSPECTION AND CHECKING ..... 22 - 23
REPLACEMENT ..... 22 - 24
VACUUM SYSTEM ..... 22 - 25

BRAKE PIPE SYSTEM

Brake pipe unions 8 ÷ 10 Nm (0,8 ÷ 1 Kgm)
Brake hose unions 11 ÷ 14 Nm (1,1 ÷ 1,4 Kgm)

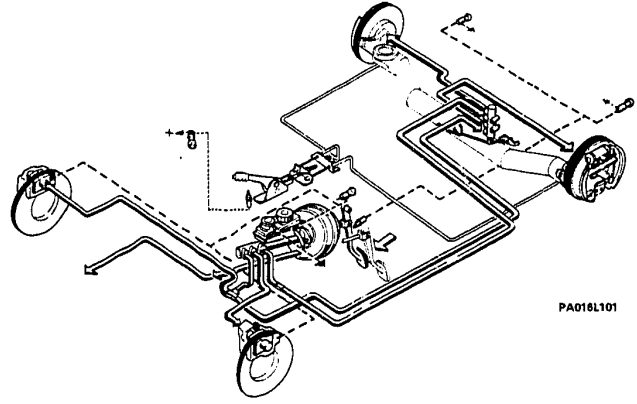

Check the condition of the brake pipes and hoses, replacing defective items.

- When removing parts of the system, extract the hydraulic fluid from the reservoir with a syringe.
- Plug open pipe ends to prevent the ingress of dirt.
- Undo the pipe unions and remove the brake pipes.
- Undo the unions and remove the brake hoses.
- Make sure that the hoses are not twisted when refitting, and then fill up the reservoir with fluid.

Bleed the braking system.

BRAKING CORRECTOR

REMOVAL

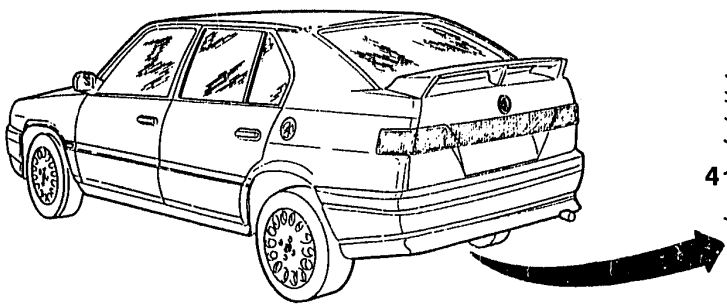

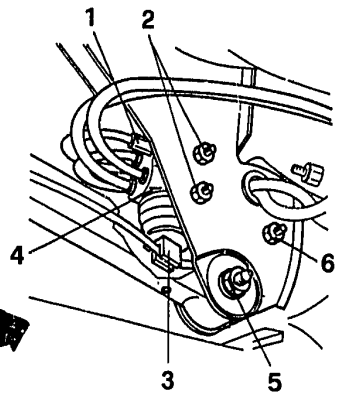

1. Unscrew the four connections from the braking corrector and plug the two supply hoses.
2. Remove the two brake correcting-valve mounting bolts.
3. Free the fork from the command spring.
4. Remove the brake correcting-valve.
5. Remove the Panhard rod mounting bolt.
6. Slacken the balance rod bolt.

REMOVAL (Continued)

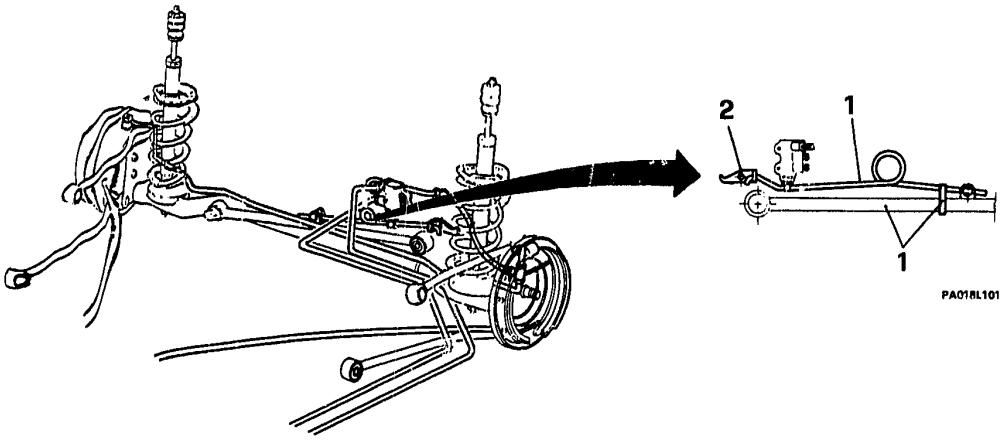

1. Lower the Panhard rod and remove the spring and rubber ring.
2. Remove the bolt and balance rod.

Do not further dismantle the braking corrector.

REPLACEMENT

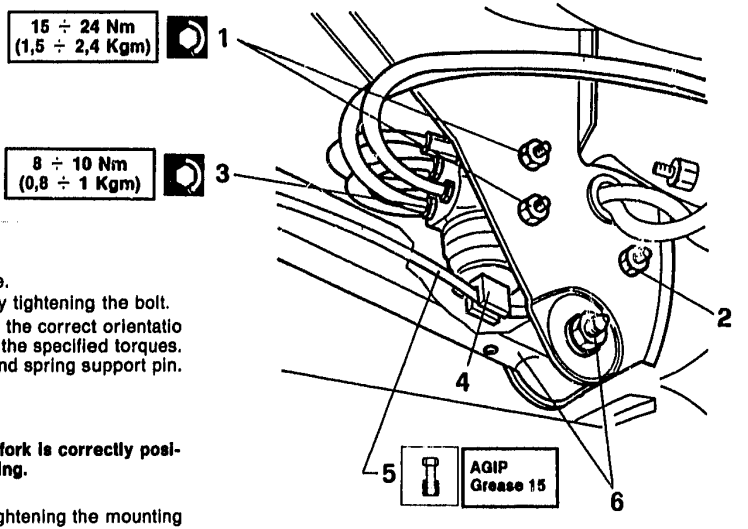

1. Refit the braking corrector valve.
. Refit the balance rod without fully tightening the bolt.
3. Refit the brake pipes, observing the correct orientatio of the arrows, and tightening to the specified torques.
4. Lubricate the fork, balace rod and spring support pin.
5. Refit the command spring.

Make sure that the valve fork is correctly positioned on the comand spring.

6. Refit the Panhard rod without tightening the mounting bolt.

REPLACEMENT (Continued)

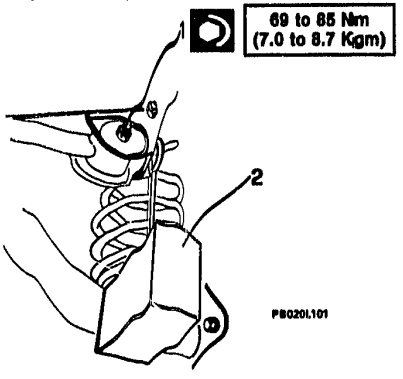

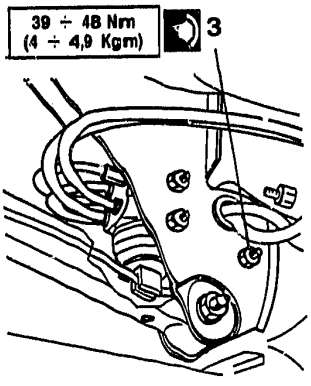

- Set vehicle to nominal height.
1. Tighten Panhard bar bolt to specified torque.
2. Fit a suitable tool with specified weight to balance rod hook:

4x2	Petrol, without ABS	120 N (12.2 kg)
	Petrol, with ABS	50 N (5.1 kg)
	Diesel oil	80 N (8.2 kg)
4x4	33	100 N (10.2 kg)
	Sport Wagon	80 N (8.2 kg)

3. Push corrector valve piston upwards to end of stroke and then tighten the balance rod to specified torque.

Bleed braking system.

The braking corrector valve and command spring may be dismantled independently of one another.
Remember that, even when replacing only the valve, the command spring must be replaced.

BRAKE SERVO

REMOVAL

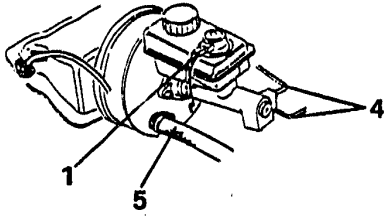

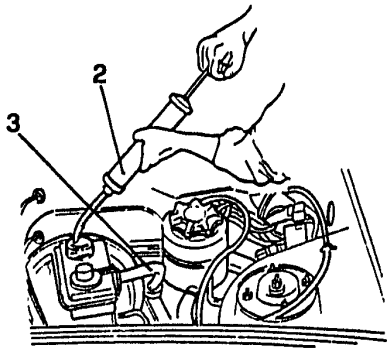

PB021L101

1. Disconnect the electrical leads.
2. Extract the hydraulic fluid.
3. Remove the feed hose from the reservoir and plug the end.
4. Undo the brake unions from the master cylinder.
5. Disconnect the vacuum pipe from the brake servo.

REMOVAL (Continued)

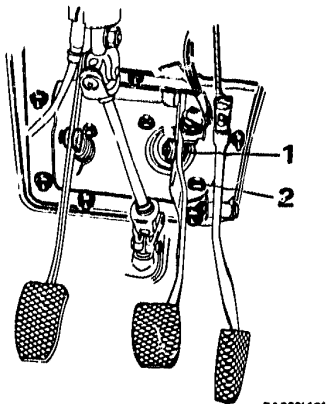

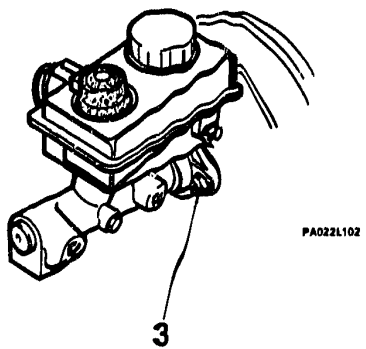

1. Disconnect the master cylinder fork.
2. Remove the mounting nuts and lift the brake servo out of the engine bay.
3. Separate the master cylinder from the rake servo.

NOTE Since the brake servo is a non-serviceable unit designed only for substitutions when faulty, operations are limited to changing the dust seal and air filter when necessary (only for ATE servos).

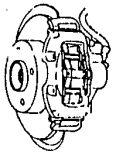

PA076L101

FRONT DISK BRAKES (ATE CALIPERS)

FRONT DISK BRAKES (ATE CALIPERS)

ASSEMBLY ..... 22 - 26
PAD SUBSTITUTION ..... 22 - 27
CALIPER ASSEMBLY
REMOVAL AND REPLACEMENT ..... 22 - 30
FLOATING CALIPER ..... 22 - 31
Removal and replacement ..... 22 - 31
Dismantling ..... 22 - 32
Inspection and checking ..... 22 - 33
Reassembly ..... 22 - 34
BRAKE DISK, REMOVAL, REPLACEMENT
INSPECTION AND CHECKING ..... 22 - 37

FRONT DISK BRAKES (ATE CALIPERS)

ASSEMBLY

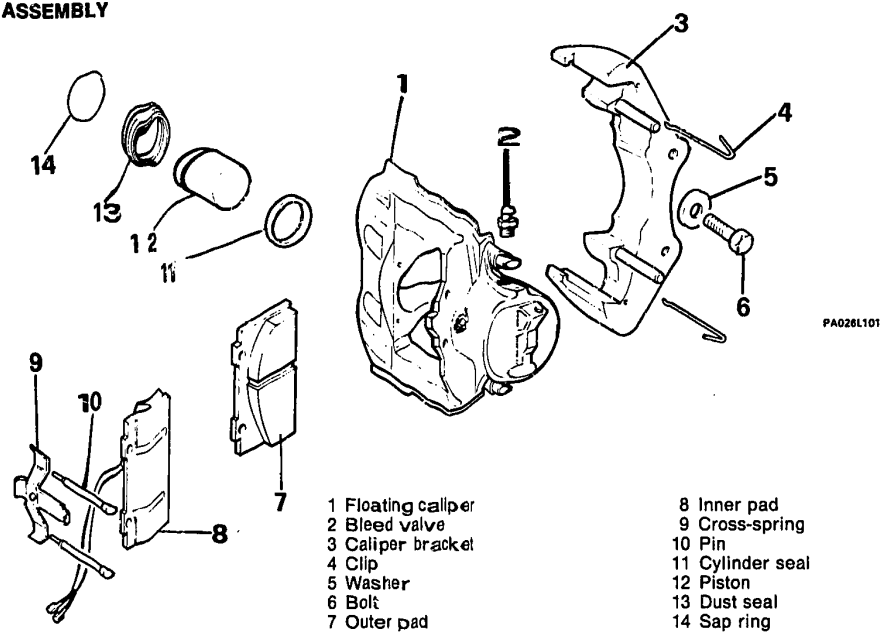

1 Floating caliper
2 Bleed valve
3 Caliper bracket
4 Clip
5 Washer
6 Bolt
7 Outer pad
8 Inner pad
9 Cross-spring
10 Pin
11 Cylinder seal
12 Piston
13 Dust seal
14 Sap ring

PAD SUBSTITUTION

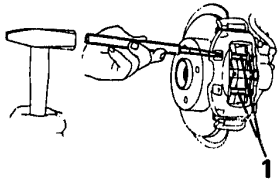

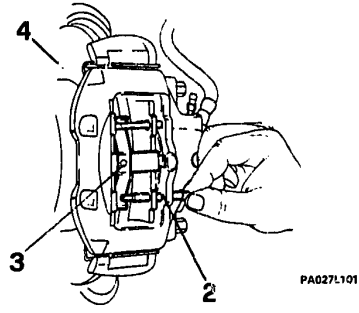

- Jack the rear of the vehicle and set it on safety stands.
- For vehicles with pad wear indicator, disconnect the relative leads.

1. Free the centering pins.
2. Remove the lower pin.
3. Remove the cross spring.
4. Remove the upper pin.

This document was downloaded free from

www.iw1axr.eu/carmanual.htm

Questo documento è stato scaricato gratuitamente da

www.iw1axr.eu/auto.htm

PAD SUBSTITUTION (Continued)

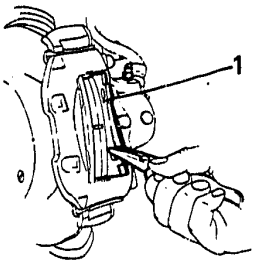

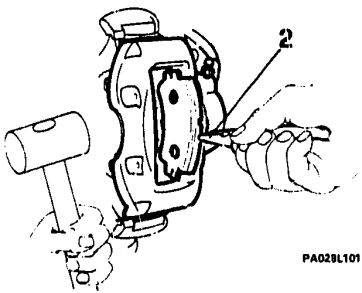

1. Extract the pad from the cylinder side.
2. Using a plastic mallet strike the caliper frame on the cylinder side and extract the second pad.

Do not depress the brake pedal with the pads removed, or the piston may be expelled from its seat in the caliper.
The pads must be fitted with the arrows in the direction of forward wheel rotation.
Pads must always be replaced on both calipers at the same time.

Use only original replacement pads.

PAD SUBSTITUTION (Continued)

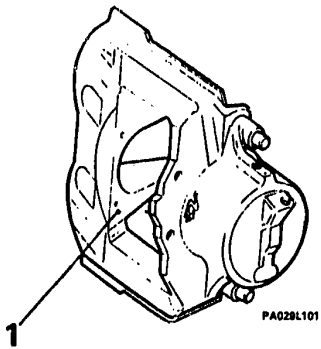



1. Clean the pad seatings with alcohol.

Do not lubricate the pad seatings in the caliper. Extract hydraulic fluid from the reservoir to drop the level, using a syringe.

- Push the piston back into its cylinder.

2. Refit the pads in the reverse order of removal.

- Top-up the level in the reservoir with the specified fluid (see TSN).

Fully depress the brake pedal a few times to regain brake efficiency.

CALIPER ASSEMBLY, REMOVAL AND REPLACEMENT

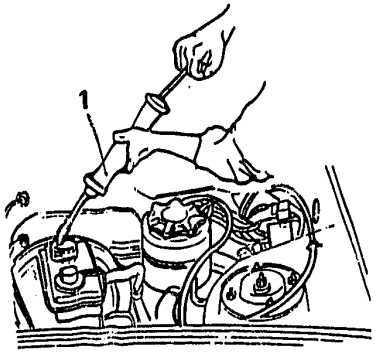

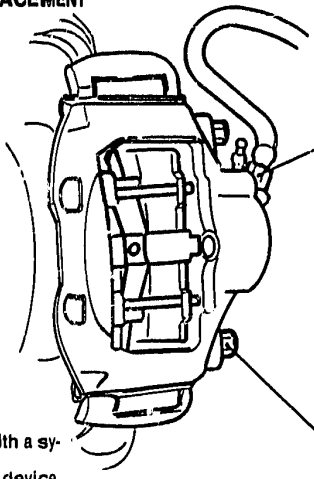

P2030L101

1. Extract the hydraulic fluid from the reservoir with a syringe.
- Disconnect the leads from the pad wear signal device.
2. Disconnect the brake hose.
3. Undo the two mounting bolts and remove the brake caliper assembly.
- Proceed with refitting in the reverse order of removal.

Bleed the brake hydraulic system.

FLOATING CALIPER
Removal and replacement

- Extract the hydraulic fluid from the reservoir using a syringe.
1. Remove the brake pads.
2. Disconnect the brake hose.
3. Using a plastic mallet, strike the floating caliper to dislodge it from the racket.
- Proceed with refitting in the reverse order of removal.

Bleed the brake hydraulic system.

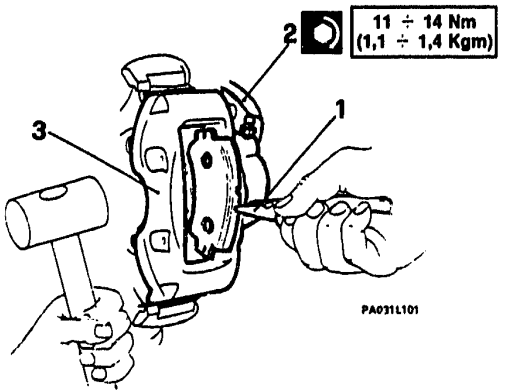

Dismantling

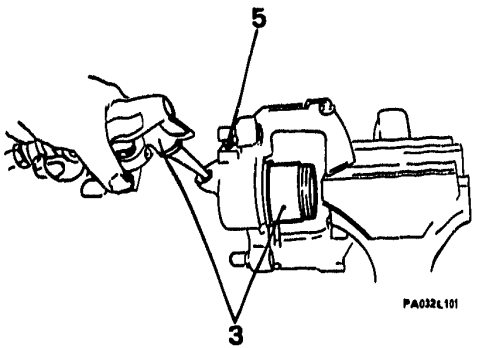

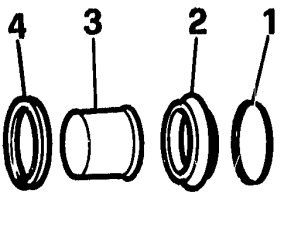

1. Remove the snap ring.
2. Remove the rubber bellows.
3. Remove the piston using a compressed air blast.
4. Extract the cylinder seal.
5. Remove the bleed valve.

Inspection and checking

- Wash all parts in alcohol and dry them in compressed air.

Do not use mineral-oil based detergents or metal tools.

1. Inspect the cylinder bore.
   Remove any traces of rust with fine emery cloth.
2. Check the efficiency of the bleed valve.
3. Check piston condition. Do not clean piston surface with abrasive cloth; if defective, substitute it.
4. Replace the seal and rubber bellows with new parts every time they are dismantled.

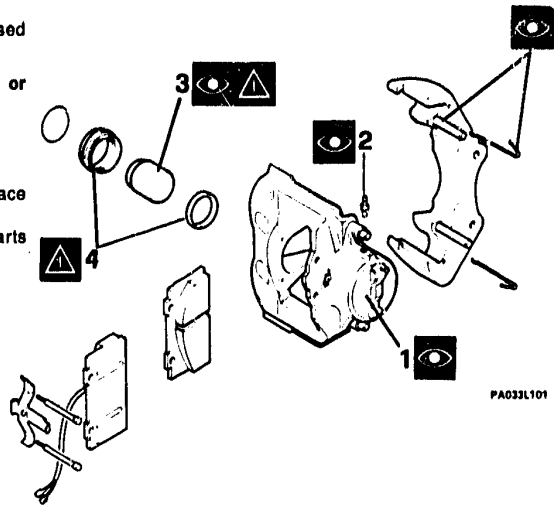

Reassembly

1. Fit the seal to the cylinder.
2. Insert the piston.
3. Fit the rubber bellows.
4. Fit the snap ring.

Make sure the bellows and retaining ring are correctly fitted.

5. Refit the floating caliper to its bracket.

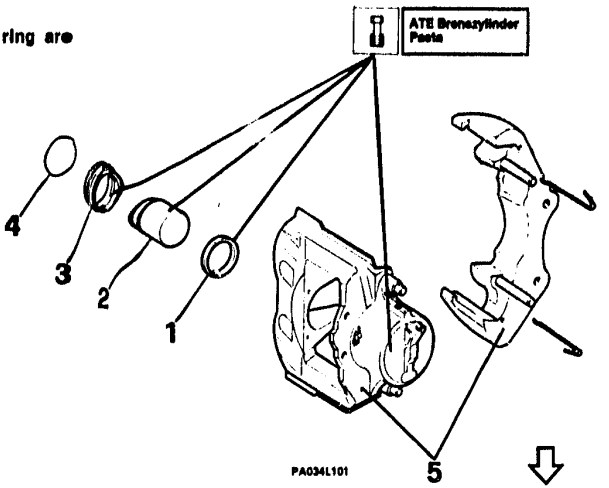

Reassembly (Continued)

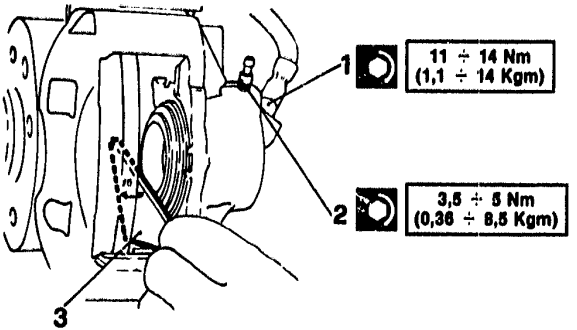

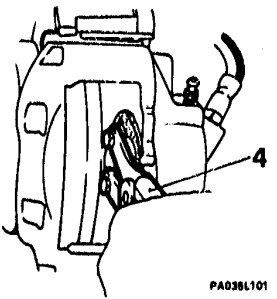

1. Refit the brake hose and tighten the union to the specified torque.
2. Refit the bleed valve to the specified torque.
3. Using a 20° set-square, check the correct position of the brake piston.
4. If the step in the piston does not fit the set-square diagonal, rotate the latter using the special turning tool until the correct position is reached



Reassembly (Continued)

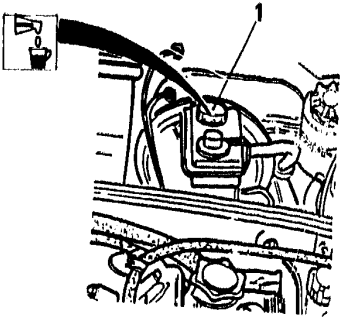

PA036L101

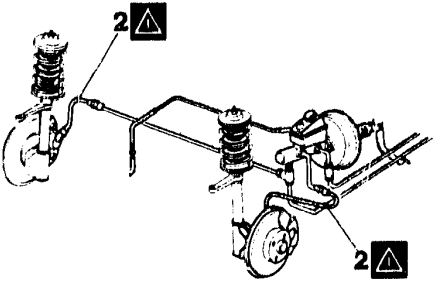

PA036L102

- Refit the pads.

1. Refill the brake-clutch fluid reservoir to the MAX mark using the specified fluid (see TSN).

   Bleed the brake system.

2. Ensure that the brake hoses are not twisted when refitted to the vehicle.

BRAKE DISK,- REMOVAL, REPLACEMENT, INSPECTION AND CHECKING

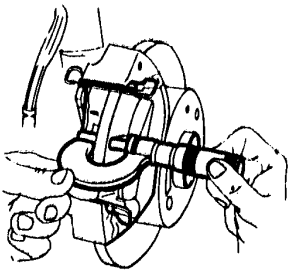

PB037L101

Min. usable disk thickness
Standard 10 mm Self-ventilating 21 mm
Min. disk thickness after grinding
Standard 9 mm Self-ventilating 20.2 mm

- Remove from hub support the brake caliper assembly, without disconnecting it from the hose.
- Remove brake disk from hub support, taking out the centering pin.
- Clean disks and check working surfaces for deep scoring or porosity.

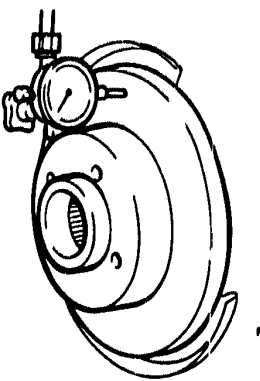

PB037L102

Max. disk wobble 0.03 mm
Measured at centre of disk - pad contact surface

- Check that disk thickness and wobble fall within specifications.

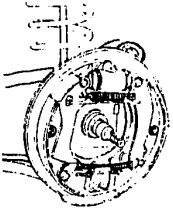

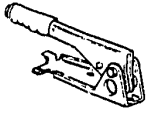

REAR DRUM BRAKES

HANDBRAKE

REAR DRUM BRAKES

ASSEMBLY....22 - 38
BRAKE SHOE SUBSTITUTION....22 - 39
BRAKE CYLINDER....22 - 42
Removal and replacement....22 - 42
Dismantling and reassembly....22 - 43
BRAKE DRUM INSPECTION AND CHECKING....22 - 44

HANDBRAKE

ASSEMBLY....22 - 45
HANDBRAKE LEVER, REMOVAL AND REPLACEMENT....22 - 46
HANDBRAKE LEVER, DISMANTLING AND REASSEMBLY....22 - 48
HANDBRAKE LEVER, INSPECTION AND CHECKING....22 - 49
HANDBRAKE CABLES....22 - 50

REAR DRUM BRAKES

ASSEMBLY

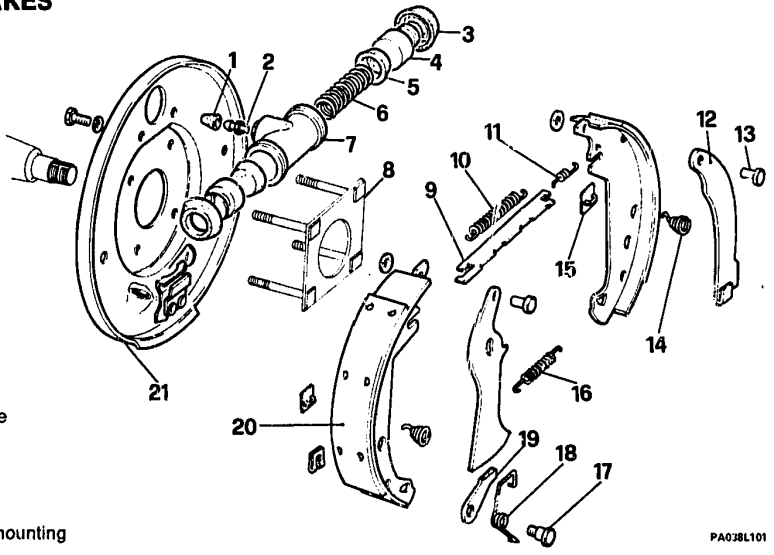

1 Bleed nipple cap
2 Bleed screw
3 Dust cap
4 Piston
5 Piston seal
6 Spring
7 Cylinder body
8 Backplate stud plate
9 Brake shoe guide plate
10 Return spring
11 Spring
12 Adjustable lever
13 Clevis pin
14 Anti-vibration spring
15 Anti-vibration spring mounting
16 Spring
17 Pin
18 Spring
19 Adjustment lever
20 Brake shoe
21 Brake back plate

BRAKE SHOE SUBSTITUTION

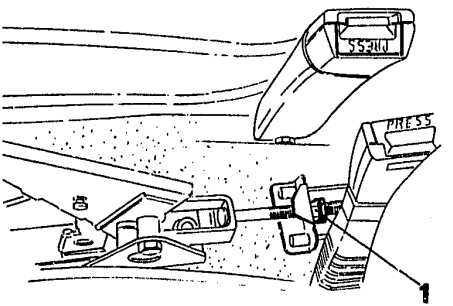

PA039L101

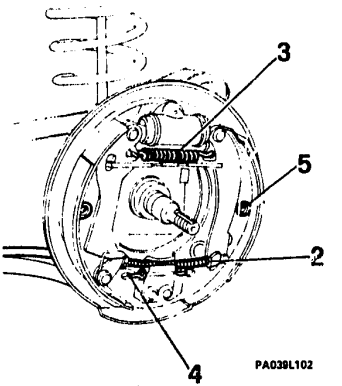

PA039L102

- Remove the road wheels and the brake drums complete with hub (see **UN.** 29).
- Remove the front seat divider.

1. Slacken the handbrake cables at the adjusting nut and locknut.
2. Unhook the handbrake cable and free it from the grommet.
3. Free the upper spring.
4. Free the lower spring.
5. Remove the anti-vibration springs.

BRAKE SHOE SUBSTITUTION (Continued)

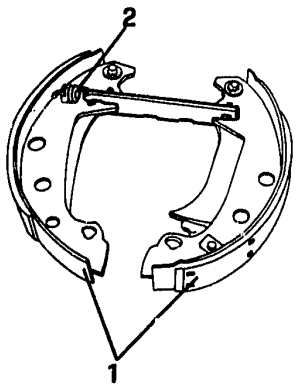

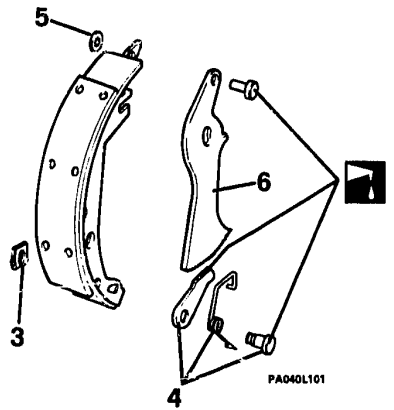

1. Remove the rake shoes.
2. Unhook the spring and separate the shoes.
3. Remove the retaining clip.
4. Withdraw the pivot, spring and lever from the shoe.
5. Remove the circlip.
6. Separate the lever from the shoe.

All circlips removed must be substituted with new replacements when reassembling.

- Lubricate the parts as shown, and reassemble the adjuster device.

BRAKE SHOE SUBSTITUTION (Continued)

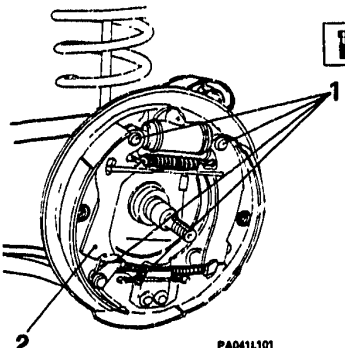

PA041L101

ATE Bremszylinder Paste

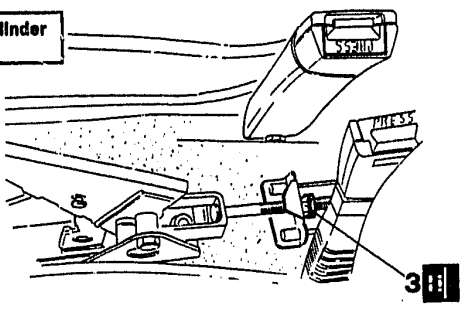

PA041L102

- Fit the brake shoes in the reverse order of removal, following the instructions below.
1. Lubricate the parts shown with the specified grease.
2. Adjust the lever to give the maximum shoe gap.
- Fit the drum.
- Set the drum/shoe gap by repeatedly depressing the rake pedal.
3. Adjust the handbrake lever travel (see **UN.** 00).

BRAKE CYLINDER
Removal – replacement

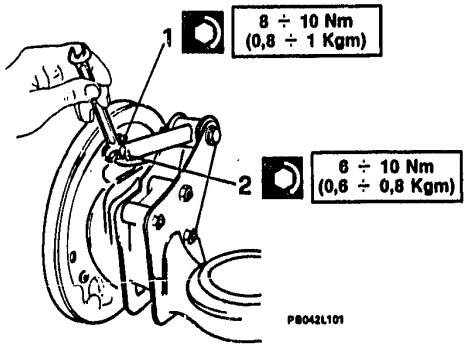

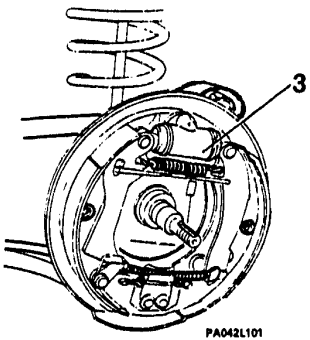

- Remove the brake shoes
1. Disconnect the brake hose.
2. Remove the two cylinder mounting bolts.
3. Remove the cylinder.

After refitting, bleed the brake system

Dismantling and re-assembly

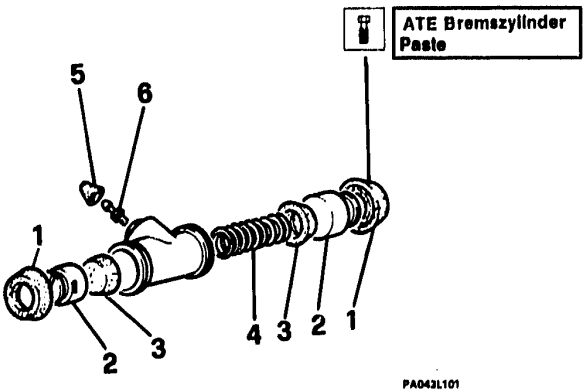

1. Remove the dust seals.
2. Recover the pistons.
3. Recover the seals.
4. Extract the spring.
5. Remove the dust cap.
6. Remove the bleed screw.

BRAKE DRUM, INSPECTION AND CHECKING

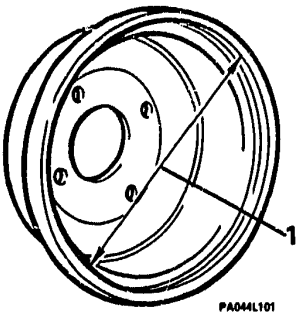

PA044L101

DRUM DIMENSION LIMITS AFTER SKIMMING	MAXIMUM INSIDE DIAMETER	mm	229,1 (9") 204,0 (8")
	CYLINDRICITY ERROR	mm	< 0,03
	CONCENTRICITY ERROR	mm	< 0,08
DIMENSION LIMITS	MAXIMUM INSIDE DIAMETER	mm	229,6 (9") 204,5 (8")

1. Check the inside diameter of the drum, and if necessary skim it.
   - Polish the shoe contact surfaces with emery cloth.

After overhauling or replacing the brake drum, ensure that correct mating with the brake shoes is obtained.

HANDBRAKE

ASSEMBLY

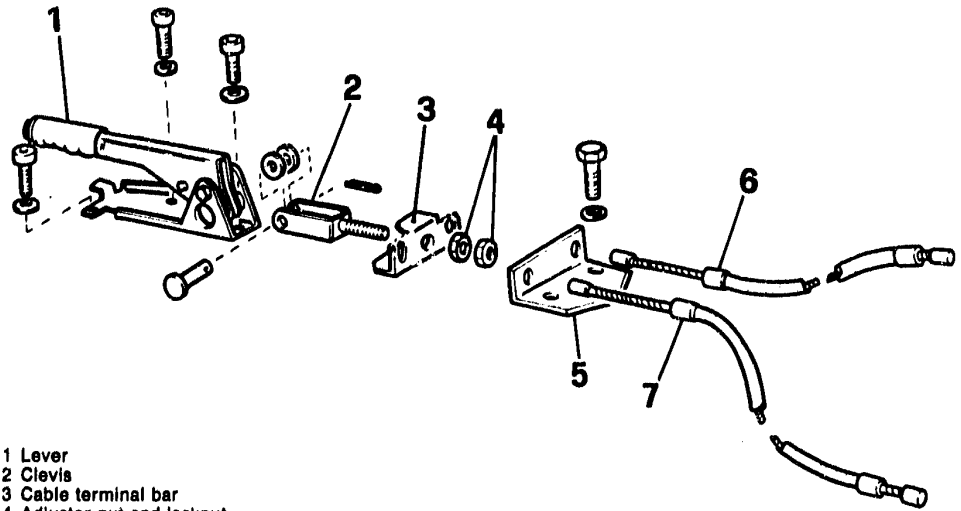

1 Lever
2 Clevis
3 Cable terminal bar
4 Adjuster nut and locknut
5 Bracket
6 RH handbrake cable
7 LH handbrake cable

PA048L101

HANDBRAKE LEVER, REMOVAL AND REPLACEMENT

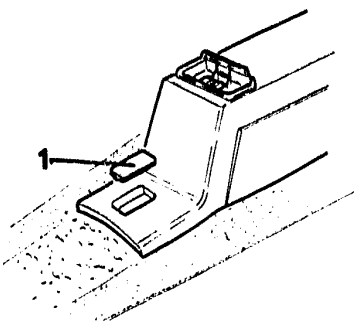

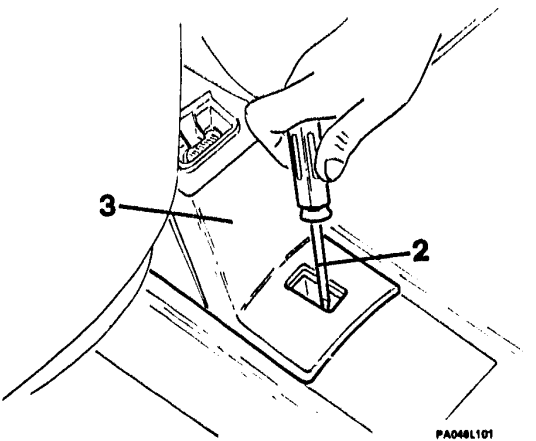

1. Remove the screw cover from the central seat divider.
2. Remove the mounting screw.
- Pull up the handbrake lever.
3. Push back the divider unit to free it, and remove it.

HANDBRAKE LEVER, REMOVAL AND REPLACEMENT (Continued)

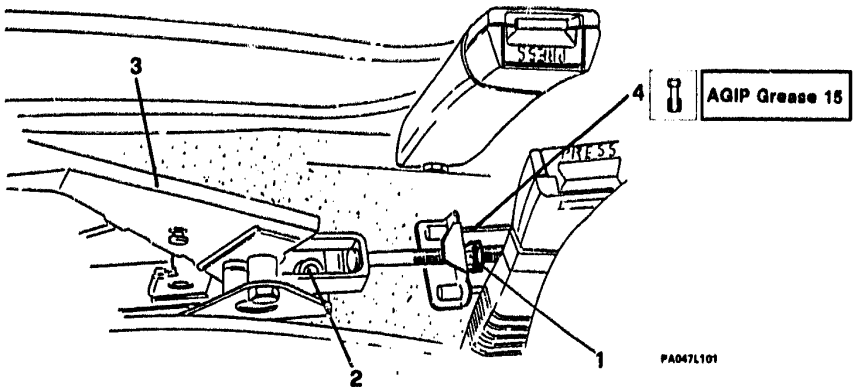

1. Remove the adjuster nut and locknut.
2. Remove the lever bracket mounting bolts.
- Disconnect the electrical connection from the switch.
3. Remove the lever complete with bracket, and recover the spacers.
4. After refitting, lubricate the parts shown.
- Adjust the handbrake (see GR. 00).

HANDBRAKE LEVER, DISMANTLING AND REASSEMBLY

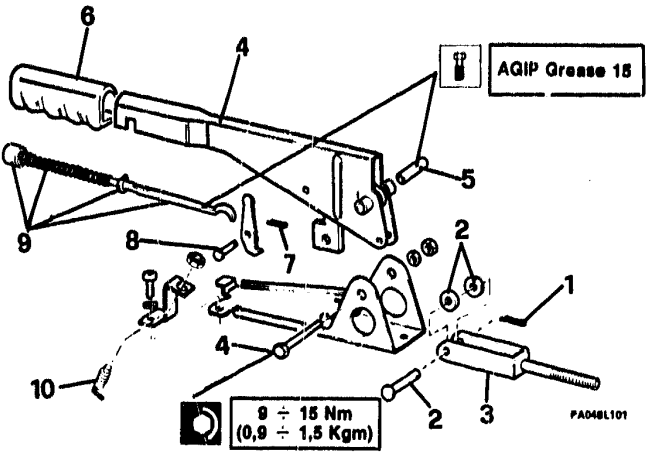

1. Extract the split pin.
2. Remove the clevis pin with washers.
3. Remove the clevis.
4. Unscrew the mounting bolt and remove the lever.
5. Extract the bush from the lever.
6. Remove the grip.
7. Remove the split pin.
8. Withdraw the clevis pin.
9. Remove the ratchet release assembly complete.
10. Remove the switch.

HANDBRAKE LEVER, INSPECTION AND CHECKING

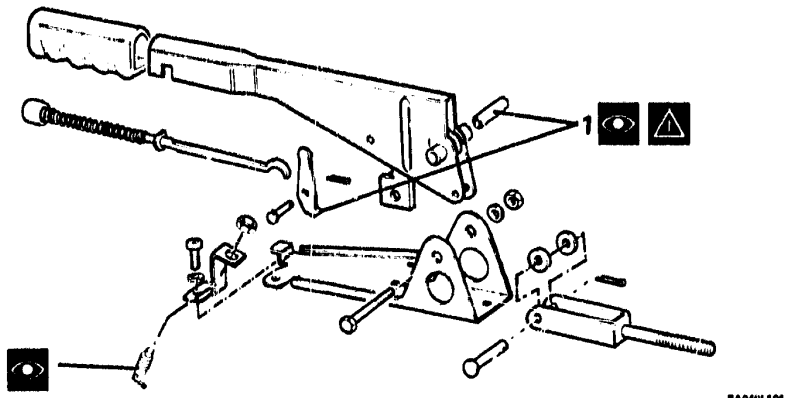

Visibly check the conditio of the individual parts.

1. Make a more detailed examinatio of the bush, and pawl and ratchet teeth.

- Check the condition of the electrical leads, and switch operation.

HANDBRAKE CABLES

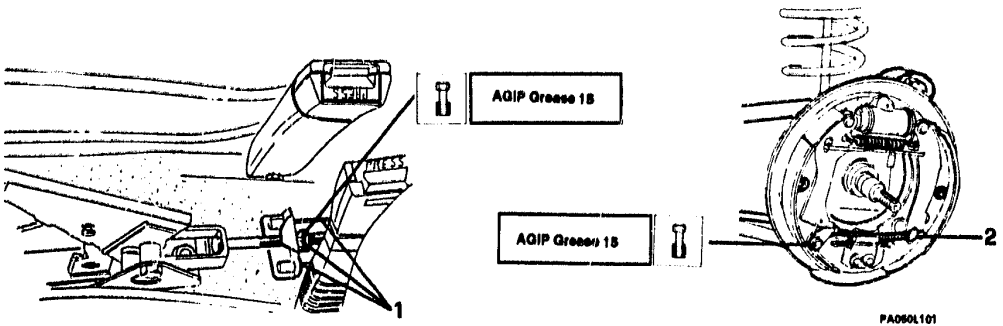

- Remove the central divider unit.
1. Slacken the handbrake cables at the adjuster nut/locknut.
- Remove the road wheel and rear brake drum complete with hub (see **UN.** 26).
2. Unhook the cable ends and free them from the grommets.
- Free the cables from the brake backing plates, then remove them from the underbody cable clips and withdraw them from the passenger compartment.
- Lubricate the parts shown when refitting.
- Adjust the handbrake lever (see **UN.** 00).

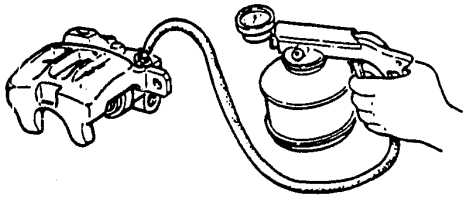

REAR DISK BRAKES (MODELS WITH A.B.S.)

REAR DISK BRAKES

REMOVAL AND REPLACEMENT .....22 - 51
REAR BRAKE CALIPERS, DISMANTLING.....22 - 54
REAR BRAKE CALIPERS, REASSEMBLY.....22 - 55
INSPECTION AND CHECKING .....22 - 57
Brake caliper and pads .....22 - 57
Brake disk .....22 - 58
BRAKE PAD SUBSTITUTION.....22 - 59

REAR DISK BRAKES
REMOVAL AND REPLACEMENT

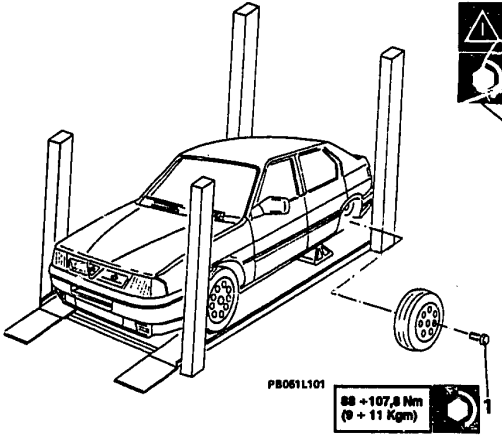

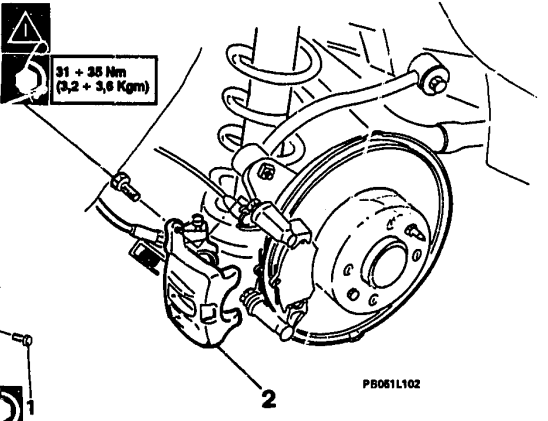

- Set vehicle on lift.

1. Remove rear wheel.

2. Remove mounting bolts and lift off brake caliper.

Use new mounting bolts, when refitting caliper.

REMOVAL AND REPLACEMENT (Continued)

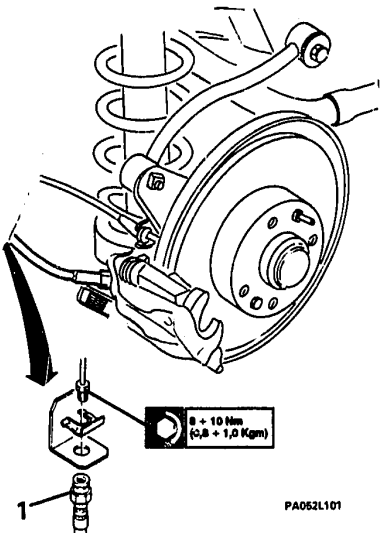

1. If necessary, disconnect union and brake hose.

After refitting, bleed the braking system.

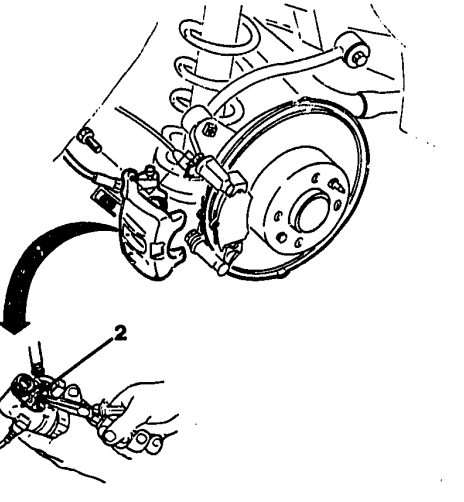

2. If necessary, remoe the handbrake cable from the caliper.

REMOVAL AND REPLACEMENT (Continued)

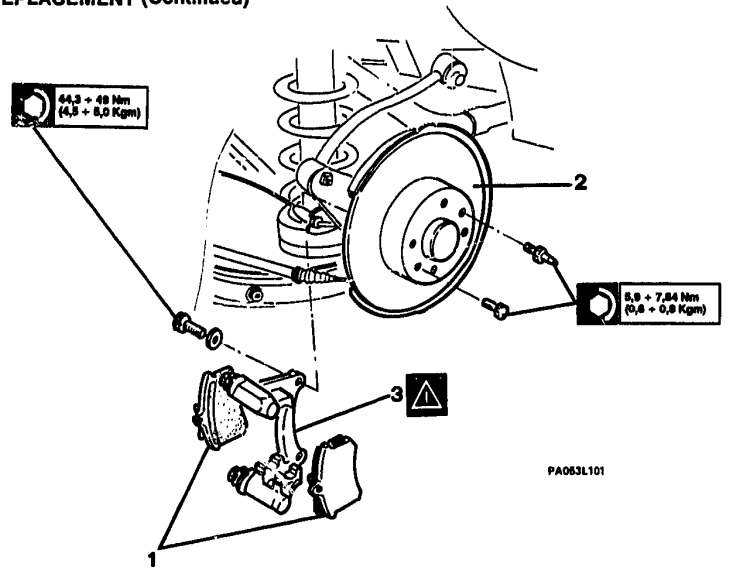

1. Remove the brake pads.
2. Detach the disk.
3. If necessary, remove the brake caliper bracket.

Make sure the rubber dust seals are in good condition when refitting; if defective, replace them.

REAR BRAKE CALIPERS, DISMANTLING

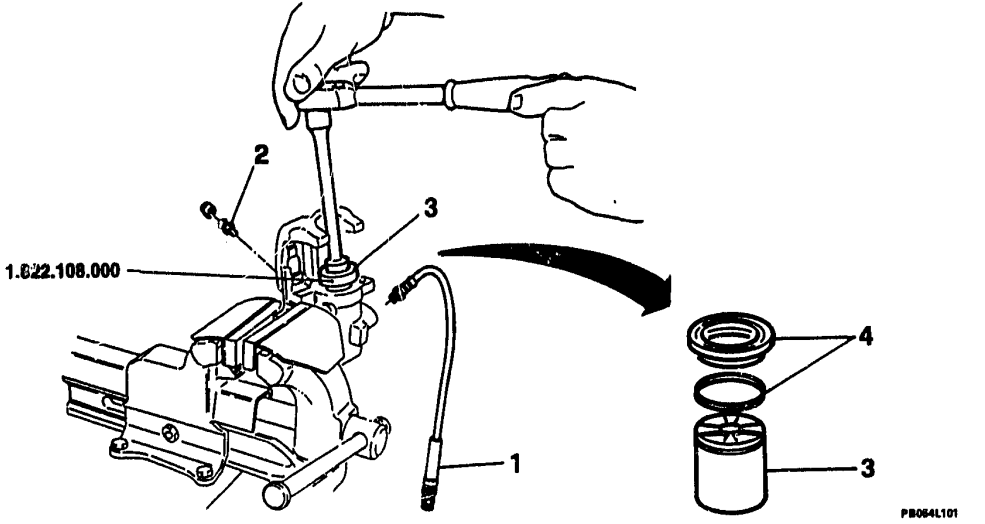

1. Disconnect brake hose union from caliper.
2. Remove bleed screw.
3. Using tool N° 1.822.108.000, remove piston .
4. Remove protective rubber cover and seal ring.

REAR BRAKE CALIPERS, REASSEMBLY

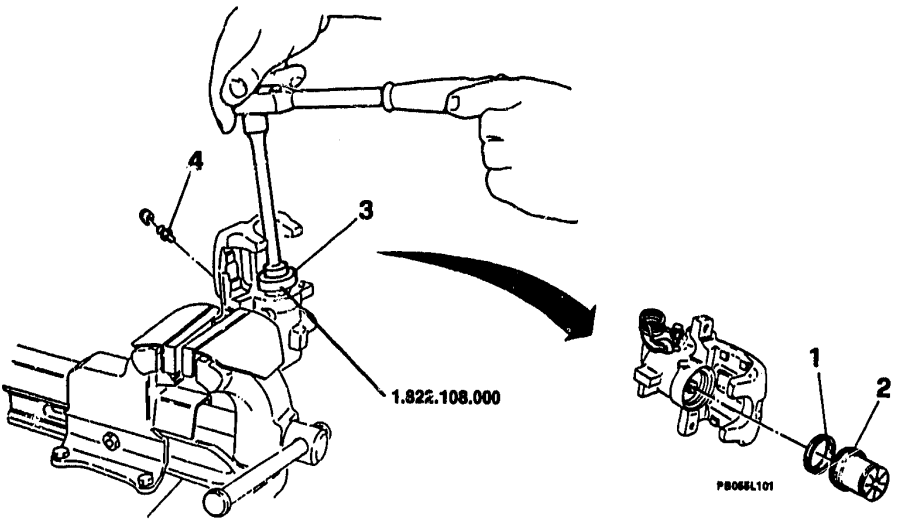

1. Fit cylinder seal to caliper cylinder.
2. Place protective rubber cover on rear part of piston.
3. Fit piston to caliper cylinder, using tool N° 1.822.108.000.
4. Screw on bleed screw.

REAR BRAKE CALIPER, REASSEMBLY (Continued)

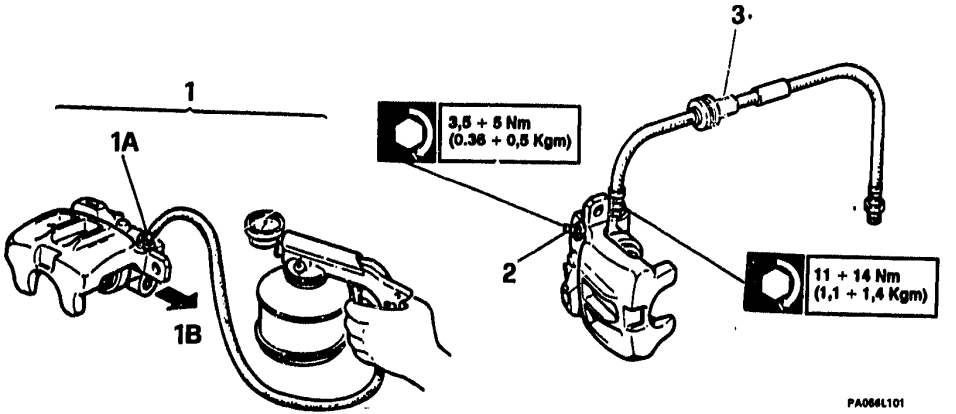

1. Fill the caliper (1A) with hydraulic fluid until it overflows from hole (1B) (brake union connection) without air bubbles.
2. Tighten the bleed screw to the specified torque.
3. Fit the brake hose and tighten the union to the specified torque.

INSPECTION AND CHECKING

Brake caliper and pads

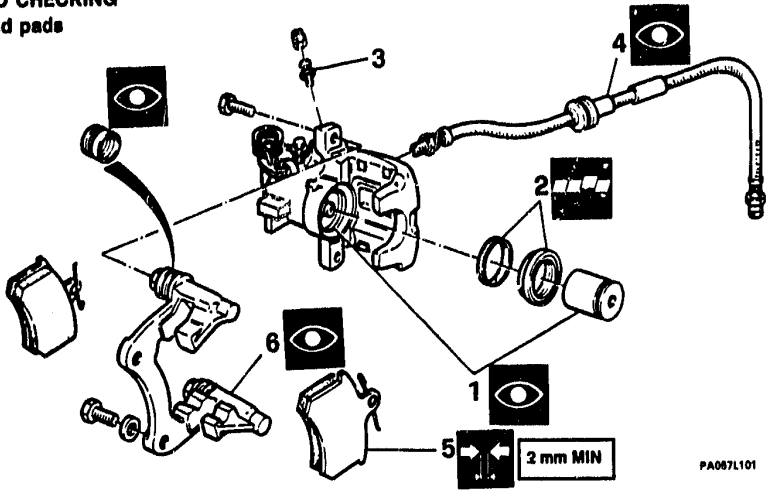

1. Inspect the brake cylinder and piston for signs of abrasion and seizing; if present, substitute the caliper complete with piston.
2. Always refit a new piston seal and dust cover.
3. Make sure the bleed screw is not blocked.
4. Check the hose for bulges or cracks.
5. Substitute the brake pads when they are worn below 2 mm thickness.
6. Make sure the caliper bracket is not cracked or distorted.

Brake disk

Maximum wear	Machining limit
20,2	21

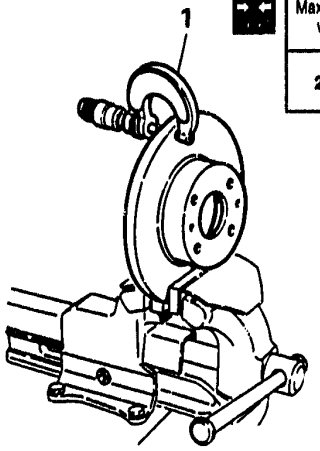

PA068L101

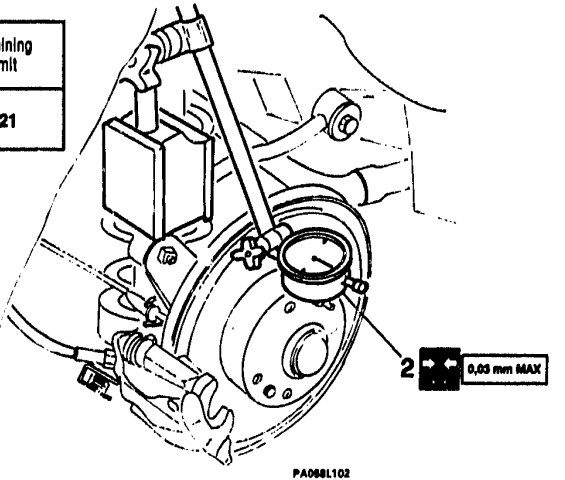

PA068L102

1. Check disk thicknesses and ensure that the working surfaces do not show deep ridging or porosity. If necessary machine to within the specified tollerances.

2. If brake pads only are to be replaced, check disk centering errors

BRAKE PAD SUBSTITUTION

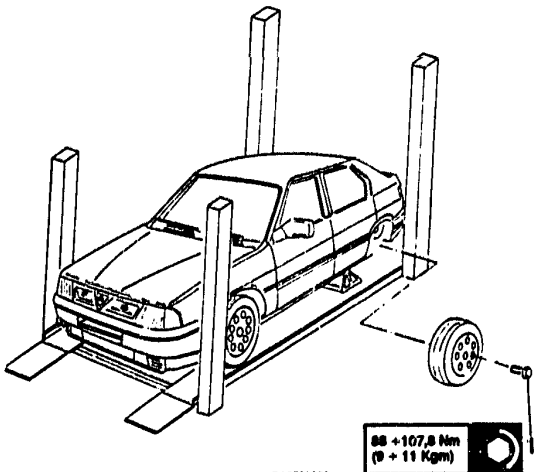

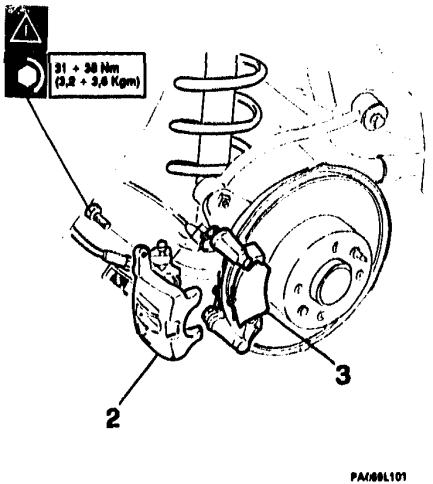

1. Remove the rear road wheel.
2. Remove the mounting bolts and detach the brake caliper.

Fit new bolts when refitting the caliper body.

3. Substitute the brake pads.

NOTE **Before refitting the caliper, set the piston back by rotating it clockwise.**

NOTE **After fitting, start the engine and depress the brake pedal repeatedly to re-set the automatic handbrake adjuster.**

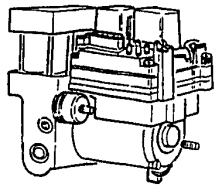

ANTI-LOCK BRAKING SYSTEM (A.B.S.)

CHECKING LEVEL OF THE BRAKE/CLUTCH FLUID

REPLACING BRAKE FLUID

BLEEDING AIR FROM THE BRAKE SYSTEM

ANTI-LOCK BRAKING SYSTEM (A.B.S.)

BRAKING SYSTEM CHART ..... 22 - 60
ABS SYSTEM COMPONENTS ..... 22 - 61
HYDRAULIC AND ELECTRONIC CONTROL UNITS, REMOVAL ..... 22 - 62
INDUCTIVE SENSORS, REMOVAL ..... 22 - 64
Front ..... 22 - 64
Rear ..... 22 - 65
INSPECTION AND CHECKING ..... 22 - 67
Front inductive sensors ..... 22 - 67
Rear inductive sensors ..... 22 - 68

CHECKING LEVEL OF THE BRAKE/CLUTCH FLUID ..... 22 - 69

REPLACING BRAKE FLUID ..... 22 - 70

BLEEDING AIR FROM THE BRAKE SYSTEM ..... 22 - 71

ANTI-LOCK BRAKING SYSTEM (A.B.S.)

BRAKING SYSTEM CHART

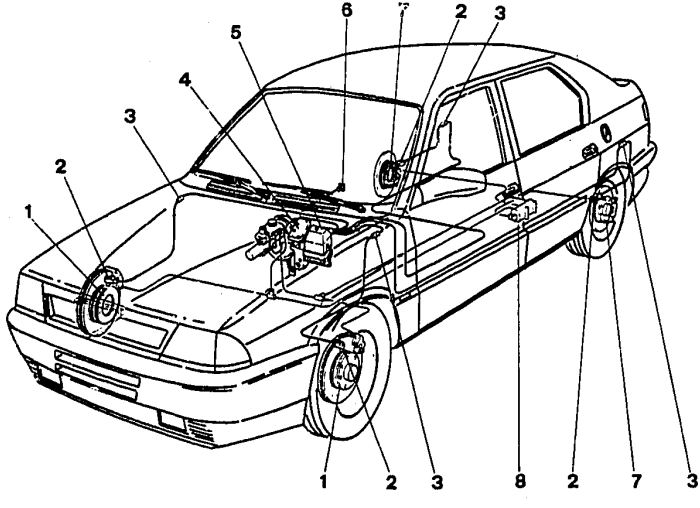

PA060L101

1. Front sensor disk.
2. Inductive sensor.
3. Sensor connection.
4. Hydraulic assembly.
5. Electronic control unit.
6. ABS light.
7. Rear sensor disk.
8. Brake pipe manifold.

A.B.S. SYSTEM COMPONENTS

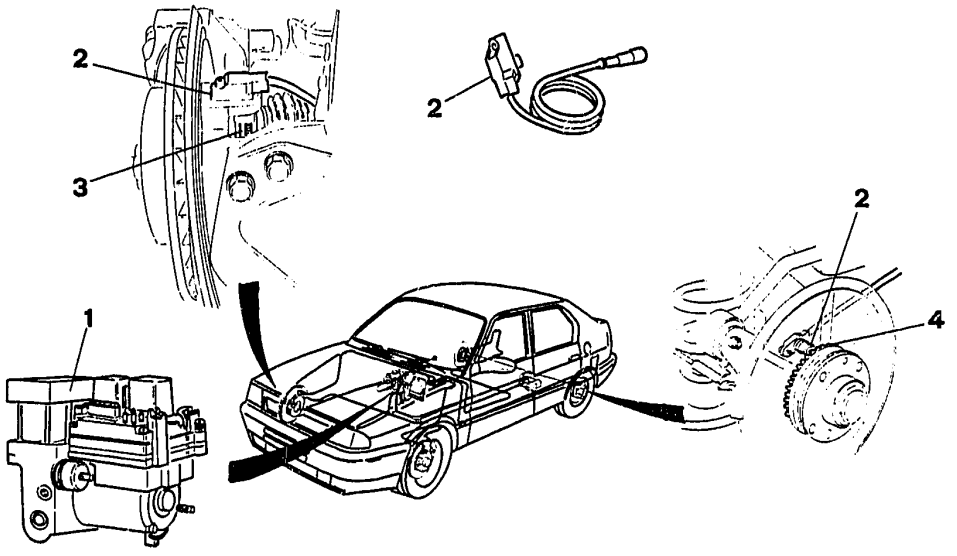

1. Hydraulic unit.
2. Inductive sensor.
3. Front sensor disk.
4. Rear sensor disk.

HYDRAULIC AND ELECTRONIC CONTROL UNITS, REMOVAL

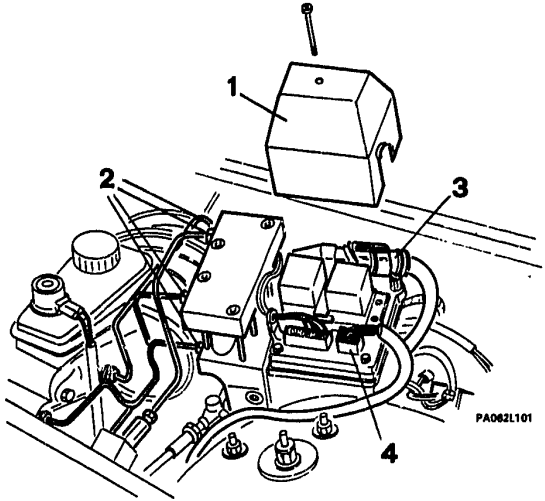

- Position the vehicle on the hydraulic lift.
- Disconnect the battery negative terminal.

1. Remove the relay cover.
2. Disconnect the four hoses from the hydraulic unit.

NOTE Using suitable plugs, block off the disconnected hoses and the holes in the hydraulic unit.

3. Unplug the connector from the electronic cotrol unit.
4. Unplug the 4-pin conector.

HYDRAULIC AND ELECTRONIC CONTROL UNITS, REMOVAL (Continued)

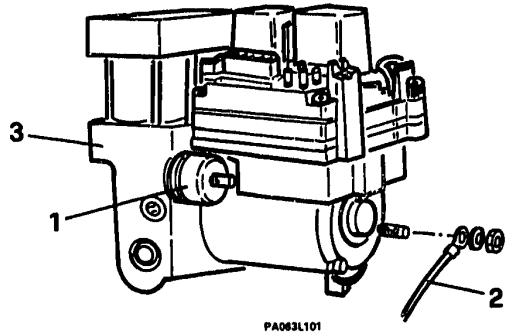

1. Slacken the three flexible mountings.
2. Lift the hydraulic unit and disconnect the earth connection.
3. Remove the hydraulic unit complete with electronic control unit.

After refitting, bleed the braking system.

INDUCTIVE SENSORS, REMOVAL

Front

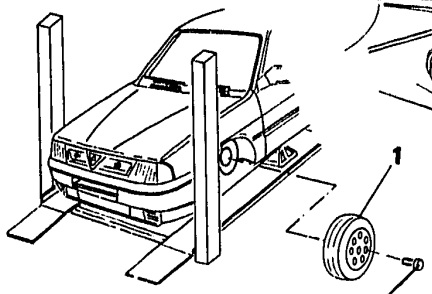

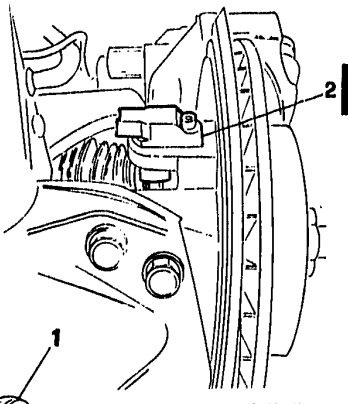

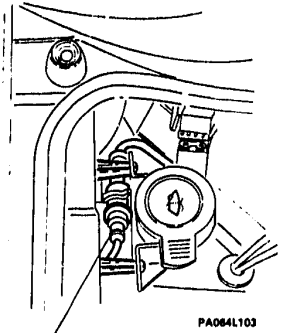

88 ÷ 107,8 Nm
(9 ÷ 11 Kgm)

1. Remove the road wheel.
   - Remove the locori (see **UN.** 76).
2. Remove the inductive sensor mounting screw.
3. Undo the connection in the engine bay.
   - Remove the sensor.

INDUCTIVE SENSORS, REMOVAL (Continued)
Rear

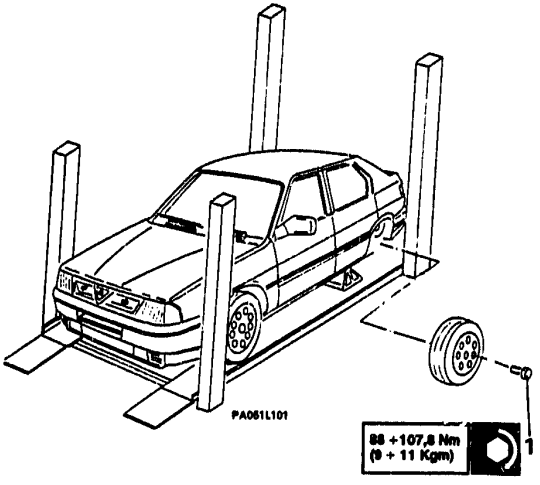

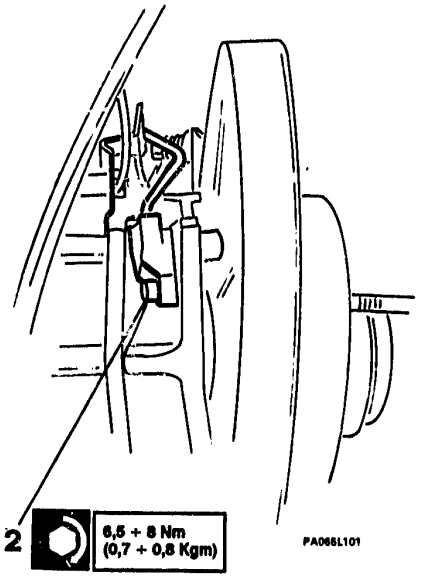

1. Remove the road wheel.

2. Remove the inductive sensor mounting screw.

Rear (Continued)

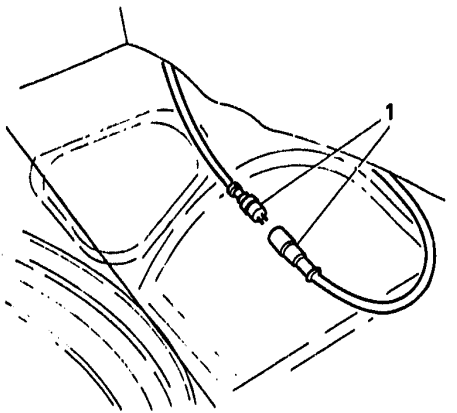

PA066L101

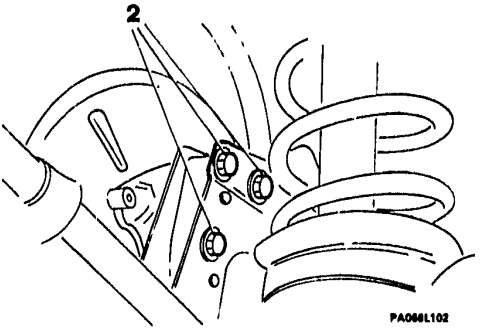

PA066L102

1. Disconnect the connection in the luggage compartment.
2. Unscrew the hub mounting bolts.

- Pull back the hub bracket enough to remove the sensor.

INSPECTION AND CHECKING

Front inductive sensors

Clearance between inductive sensor and sensor disk	0,25 ÷ 0,75

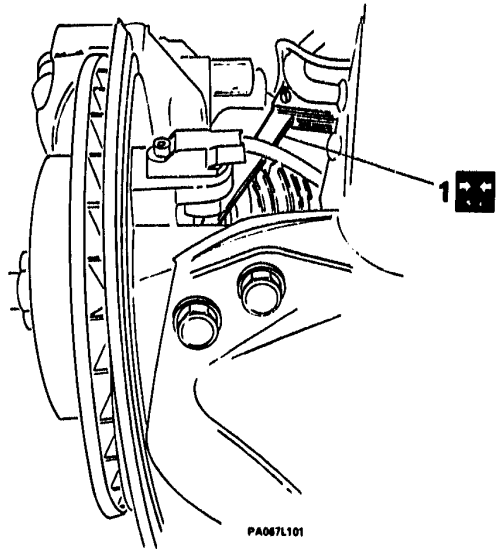

1. Using feeler gauges measure the clearace between inductive sensor and sensor disk.

- If the specified clearance is not found, substitute the sensor.

Rear inductive sensors

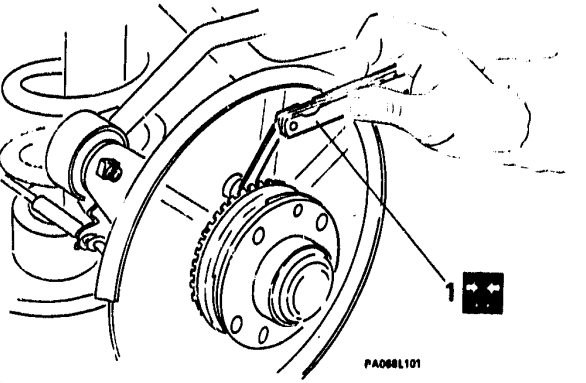

Clearance between inductive sensor and sensor disk	**0,25 ÷ 0,75**

- Remove the brake disk.

1. Using feeler gauges measure the clearance between inductive sensor and sensor disk.

- If the specified clearance is not found, substitute the sensor.

CHECKING LEVEL OF THE BRAKE/CLUTCH FLUID

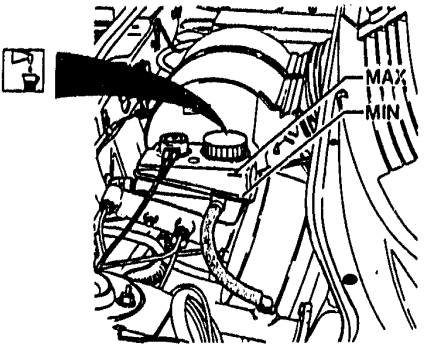

NOTE **The fluid level should be checked with the vehicle on a level surface.**

- Check that the fluid is level with the MAX mark on the side of the reservoir and that it does not fall more than a quarter of the way below this level.
- If necessary top-up with the specified fluid (see TSN) and bleed air from the system.

If the fluid level is very low, check the brake/clutch system for leaks.

REPLACING BRAKE FLUID

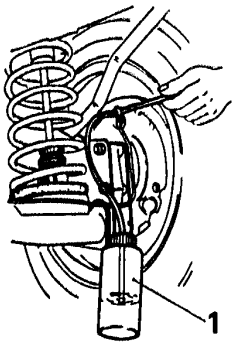

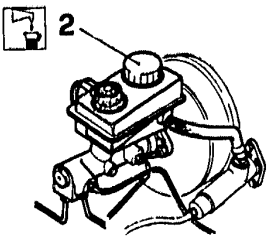

1. Attach a hose to the drain screws on the wheels and drain off the brake fluid into a suitable container.
- Refill the system with the correct fluid (see TSN) and bleed the air from the system.
2. Refilling should only be carried out with the filter inserted in the reservoir.

Only use the specified fluids taken from sealed cans.

Do not re-use old fluid.

Avoid spilling the brake fluid onto painted metal surfaces as the fluid is corrosive.

If the travel of the brake pedal is long and spongy there may be air bubbles in the system and it will therefore be necessary to bleed the system again.

BLEEDING AIR FROM THE BRAKE SYSTEM



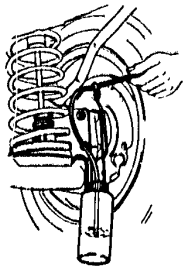

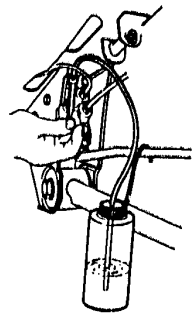

- Place the vehicle on a lift.
- If necessary refill the reservoir with the specified fluid.
- Remove the dustcover from the drain screw located on the calipers.
- Push the end of a hose onto the drain screws and submerge the other end in a transparent container half filled with the specified brake fluid.
- Loosen the drain screws, repeatedly depress the brake pedal as far as possible allowing it to rise slowly each time and waiting for a few moments between pumps. Repeat the operation until the liquid coming out of the hoses is free from air bubbles and then fully depress the brake pedal and tighten the drain screws.

NOTE: It is up to the operator to decide whether to act on the five drain screws seperately or all at the same time.

- Pull off the hoses and fit the dustcovers.
- Fully depress the brake pedal and check whether a direct action without sponginess is felt immediately after the start of the braking.
  If braking still feels spongy the system should be bled again.
- Refit the relative cap.

Do not re-use the hydraulic fluid drained off during the bleeding operations.
During bleeding the level of the fluid in the reservoir must not fall below the MIN mark.

TSN

TECHNICAL SPECIFICATIONS AND NOTES

SPECIAL TOOLS

TECHNICAL SPECIFICATIONS AND NOTES
FRONT BRAKES ..... 22 - 72
BRAKE SERVO ..... 22 - 72
BRAKE MASTER CYLINDER ..... 22 - 72
REAR BRAKES ..... 22 - 73
FLUIDS AND LUBRICANTS ..... 22 - 74
TIGHTENING TORQUES ..... 22 - 75

SPECIAL TOOLS ..... 22 - 77

TECHNICAL SPECIFICATIONS AND NOTES

FRONT BRAKES

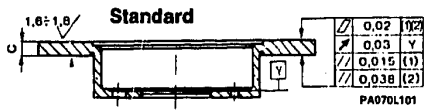

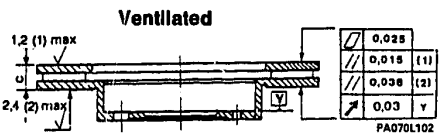

(1) Circumferential
(2) Radial

Units mm

BRAKE DISK THICKNESS	STANDARD	VENTILATED
C nominal	11	22
C minimum after skimming	10	21
C minimum usable	9	20,2
Maximum wobble	0,03	0,03

Brake pad thickness

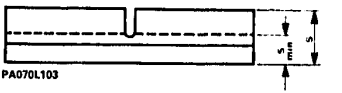

Units mm

Brake pad thickness	STANDARD	VENTILATED
S	15,15	16,5
S min. (wear or usable limit) (*)	7	7

(*) For vehicles with pad wear sensors, replace pads when warning light comes on.

BRAKE SERVO

Units: inches

Type: ATE or BENDITALIA	
Working cylinder diameter	7

BRAKE MASTER CYLINDER

Units: mm

Type: ATE or BENDITALIA	
Diameter	20,64
Stroke	32

REAR BRAKES

Drums

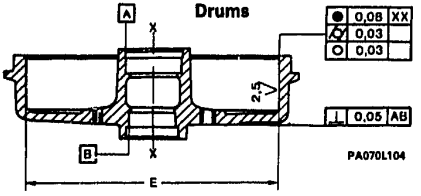

Units mm

Drum inside diameter	9"	8"
E nominal	228,6 $^{+0,2}_{0}$	203,2 $^{+0,2}_{-0,1}$
E max after skimming	229,1	204
E max usable	229,6	204,5
Cylindricity error	< 0,03	< 0,03
Concentricity error	< 0,08	< 0,08

Brake lining thickness

Units mm

Brake lining thickness	5
Minimum brake lining thickness (wear or usable limit)	0,5

Disk (for vehicles with A.B.S.)

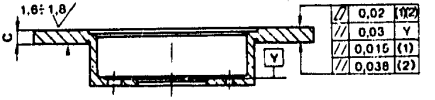

Units mm

Brake disk thickness C	
nominal	11
minimum after skimming	10
usable limit	9,2

Brake pads

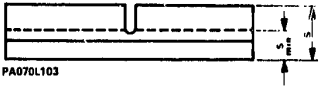

Units mm

Pad thickness S	14 ÷ 14,4
Minimum pad thickness S (wear or usable limit)	6,5

FLUIDS AND LUBRICANTS

APPLICATION	TYPE	PRODUCT	QTY
Brake/clutch hydraulic circuit refill	FLUID	-AGIP Brake Fluid DOT 4 -IP Auto Fluid FR DOT 4 -Alfa Romeo Brake Fluid Super DOT 4	0,45 kg
Brake cylinders Brake cylinder seal Brake pistons Dust seals	GREASE	ATE Bremszylinder Paste DBA Paste	
Brake pedal pivot (inside Ø) Clutch pedal pivot (inside Ø) Brake pedal connecting pin Master cylinder clevis Spring adjuster bush for braking corrector valve. Spring seat clevis on braking corrector	GREASE	AGIP F1 Grease 15	
Handbrake cables Handbrake linkages on rear brake back plates Handbrake cable terminals Handbrake adjuster thread Bolt (or spacer) holding handbrake lever to support plate. Handbrake pawl Handbrake lever bush	GREASE	AGIP F1 Grease 15	

TIGHTENING TORQUES

COMPONENT \ UNITS	N.m	kg.m
Brake pipe unions	8 ÷ 10	0,8 ÷ 1
Brake hose unions (on callpers and backplate hose)	11 ÷ 14	1,1 ÷ 1,4
Clutch hydraulic pipe union	15 ÷ 19	1,5 ÷ 1,9
Brake caliper mounting bolts to hub brackets	59 ÷ 73	6 ÷ 7,5
Front disk mounting bolts	5,8 ÷ 7,84	0,6 ÷ 0,8
Pedal unit mounting bolts	9 ÷ 15	0,9 ÷ 1,5
Intermediate piston stop screw for BENITALIA master cylinder	8 ÷ 10	0,8 ÷ 1
Master cylinder/brake servo union bolts (BENITALIA)	13,6 ÷ 15	1,4 ÷ 1,5
Master cylinder/brake servo union nuts (ATE)	21 ÷ 28	2,1 ÷ 2,8
Braking corrector valve mounting bolts	15 ÷ 24	1,5 ÷ 2,4
Accelerator pedal bolt	8 ÷ 10	0,8 ÷ 1
Brake caliper bleed screw	3,5 ÷ 5	0,36 ÷ 0,5
Road wheel bolts	88 ÷ 107,8	9 ÷ 11
Balance rod nut	39 ÷ 48	4 ÷ 4,9
Panhard rod bolt	69 ÷ 85	7 ÷ 8,7
Brake cylinder to backplate mounting bolts	6 ÷ 10	0,6 ÷ 1,0
Handbrake lever mounting bolt (to bracket)	9 ÷ 15	0,9 ÷ 1,5

TIGHTENING TORQUES (Continued)

(For vehicle with A.B.S.)

COMPONENT \ UNITS	N.m	kg.m
Brake caliper (to wheel hub bracket) bolts	31 ÷ 35	3,2 ÷ 3,6
Unions and hoses	11 ÷ 14	1,1 ÷ 1,4
Brake caliper brackets	44,3 ÷ 49	4,5 ÷ 5,0
Brake disk bolts	5.9 ÷ 7,84	0,6 ÷ 0,8
Bleed screws	3,5 ÷ 5	0,36 ÷ 0,5
Inductive sensor mounting bolts	6,5 ÷ 8	0,7 ÷ 0,8

SPECIAL TOOLS

1.822.108.000	Socket wrench for rear brake slave cylinder	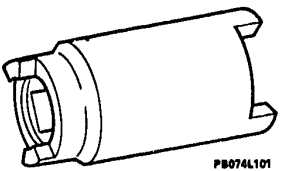 PB074L101

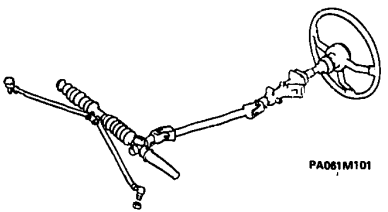

STEERING WHEEL AND COLUMN
STEERING LINKAGE

STEERING WHEEL AND COLUMN

ASSEMBLY ..... 23 - 1
DESCRIPTION ..... 23 - 2
STEERING WHEEL ..... 23 - 3
Removal and replacement ..... 23 - 3
STEERING COLUMN ..... 23 - 4
Assembly ..... 23 - 4
Removal ..... 23 - 5
Dismantling ..... 23 - 7
Inspection and checking ..... 23 - 8
Re-assembly ..... 23 - 9
Replacement ..... 23 - 10
STEERING LOCK - IGNITION SWITCH ..... 23 - 11
Removal and replacement ..... 23 - 11

STEERING LINKAGE

ASSEMBLY ..... 23 - 12
REMOVAL ..... 23 - 13
DISMANTLING AND RE-ASSEMBLY ..... 23 - 15
REPLACEMENT ..... 23 - 16

STEERING WHEEL AND COLUMN

ASSEMBLY

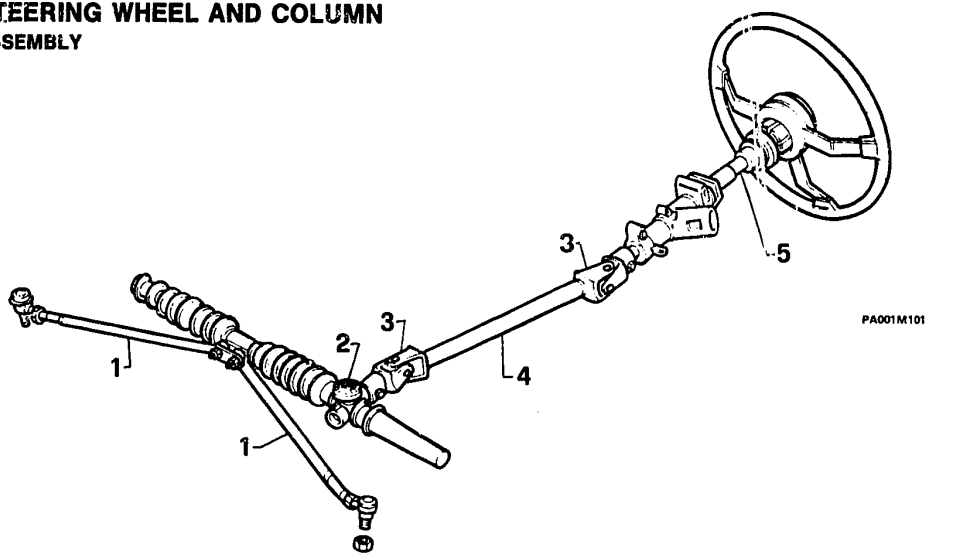

1 Tie rods
2 Steering rack unit
3 Cardan joints
4 Lower column
5 Upper column

DESCRIPTION

Steering is of the rack and pinion type.
The steering tire rods are connected to the centre of the steering rack through flexible joints, and thanks to their extra length, variations in wheel angles due to suspension movevment are limited.
The steering column is in two sections, the lower of which is collapsable in the event of impact, and the upper of which is hinged to allow the steering wheel height to be adjusted.
Steering maneouverability and precision is greatly improved by the addition of power assisted steering (SEE 23-0) available on request for all the 33 and Sport Wagon range.

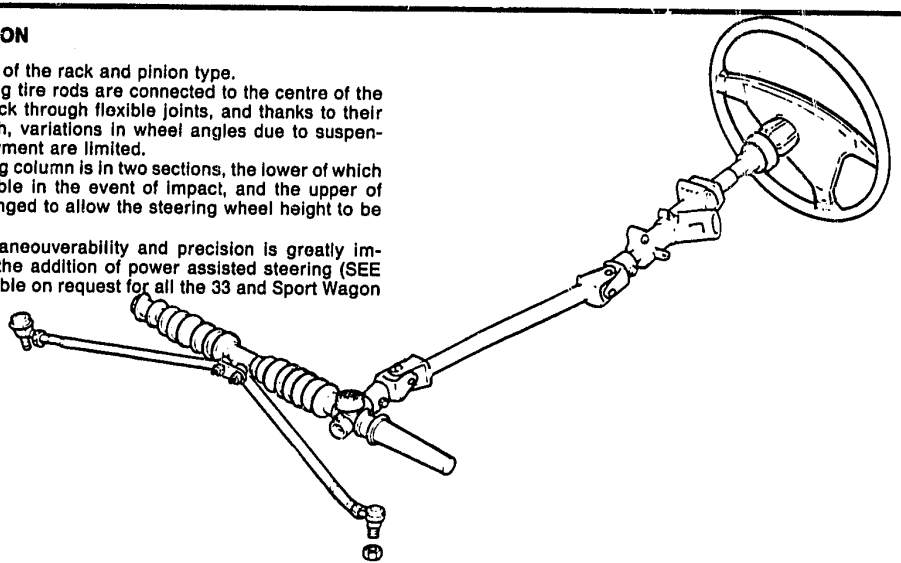

STEERING WHEEL
Removal and replacement

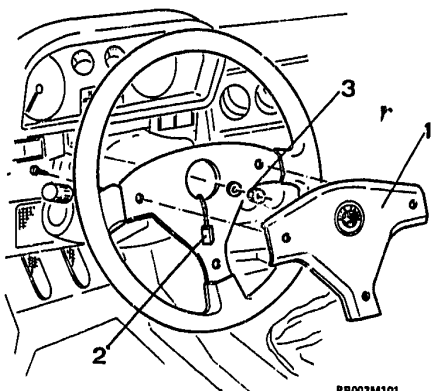

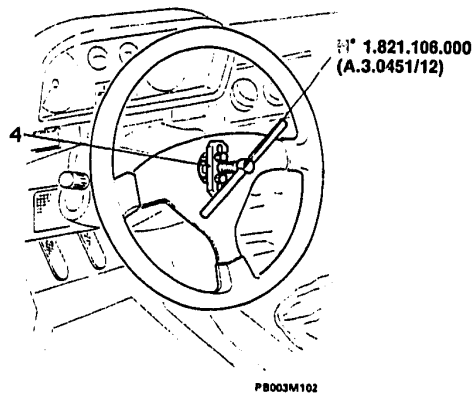

- Remove the central hub.
1. Remove the horn button retaining screw from the steering wheel hub.
2. Disconnect the horn button leads.
3. Remove the steering wheel retaining nut and washer from the column.
4. Using tool N° 1.821.106.000 (A.3.0451/12), remove the steering wheel from the column.

STEERING COLUMN

Assembly

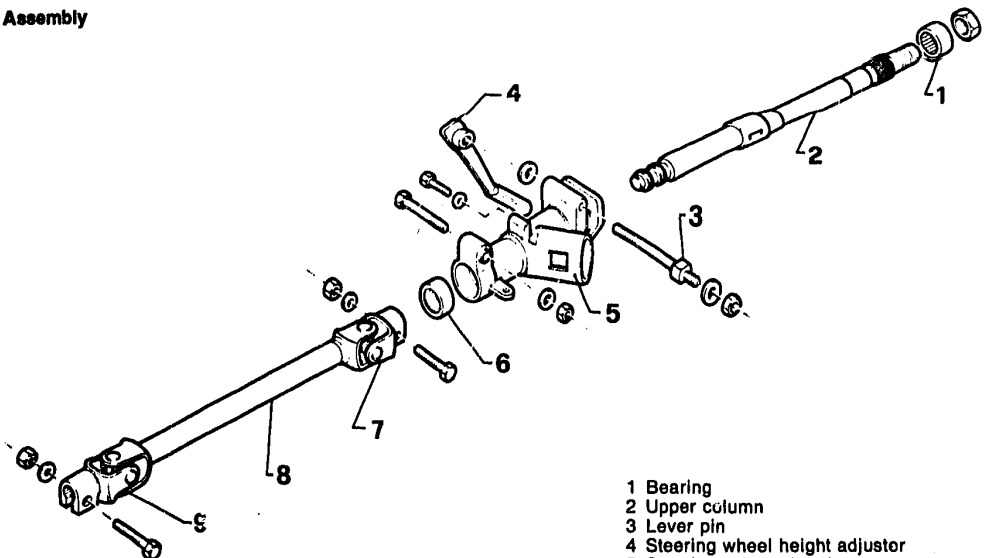

PA004M101

1 Bearing
2 Upper column
3 Lever pin
4 Steering wheel height adjuster
5 Steering column bracket
6 Bearing
7 Upper cardan joint
8 Lower column
9 Lower cardan joint

Removal

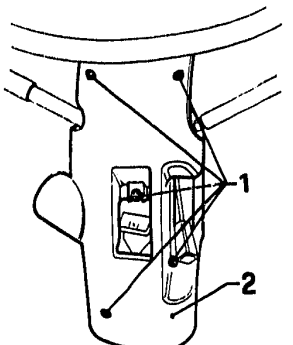

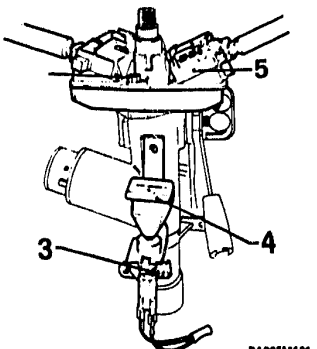

- Remove the steering wheel (see 23-3).
1. Remove the five screws from the lower half of the steering column nacelle.
2. Remove the two nacelle halves from the steering column.
3. Remove the screw from the starter button bracket on the steering column.
4. Remove the bracket with cable.
- Disconnect the leads from the indicator unit and ignition switch - steering lock.
5. Undo the two screws holding it to the column, and remove the indicator switch unit.



Removal (Continued)

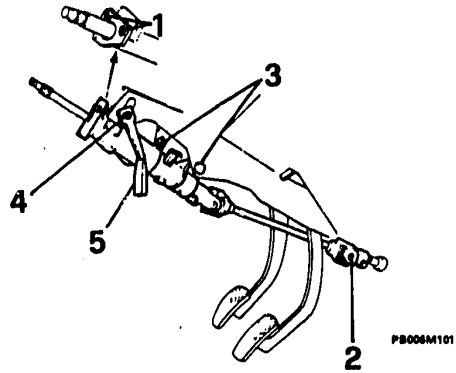

1. Remove the two screws holding the instrument panel support rod to the steering column.
2. Remove the lower cardan joint bolt.
3. Remove the bolt and the screw holding the steering column bracket to the body.
4. Undo the nut, and remove the steering wheel height adjuster lever bolt.
5. Remove the steering wheel height adjuster lever.

- Remove the steering column complete.

Dismantling

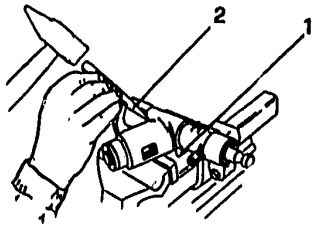

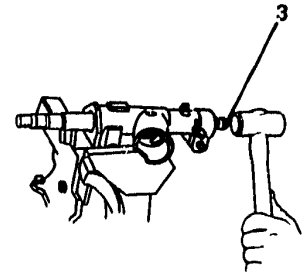

- Remove the bolt holding the cardan joint to the upper steering column section.
- Remove the lower steering column.

1. Clamp the steering column bracket complete with upper column in a vice fitted with protective jaw grips.
2. Undo the shear-head screw holding the steering lock to the column bracket.

- Remove the steering lock.

3. With the unit still in the vice, strike the upper end of the steering column with a plastic mallet, as shown in the drawing, sufficiently to shift it from the bracket complete withupper bearing.

- Withdraw the lower bearing from the steering columnn bracket.

Inspection and checking

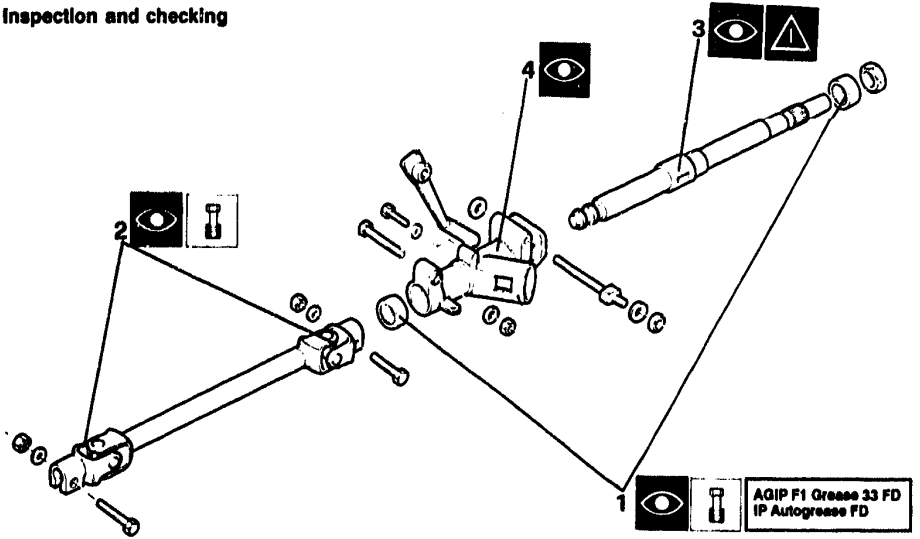

1. Check the condition of the bearings; lubricate and replace where necessary.
2. Ensure that the cardan joints are in good condition and well lubricated. Replace the lower steering column if necessary.
3. Check the condition of the upper column, especially: bearing seats, splines and lock slot.
4. Check the steering column bracket; if defective, replace it.

Re-assembly

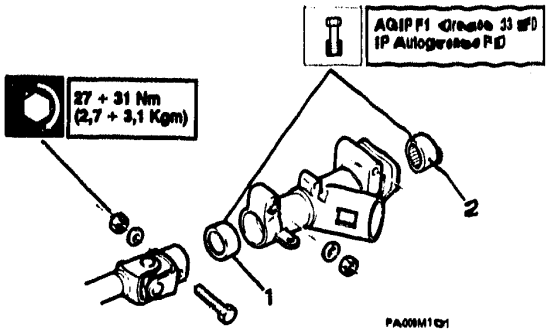

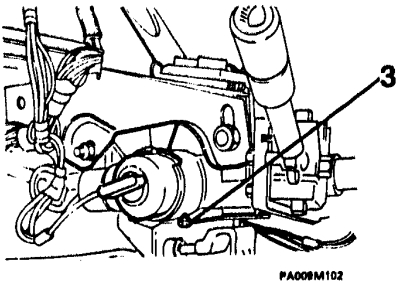

- Re-assemble in the reverse order of dismantling, observing the following points.

1. The lower bearing should be fitted right up against the column bracket seating.
2. The upper bearing is fitted against the upper bracket face with shims.

- Make sure that the upper column rotates freely without snagging and without excessive play.

3. For fixing the steering lock - ignition switch unit to the steering column bracket, use a special shear-head screw, available as a spare part, that must be driven home until the head shears off.

- When uniting upper and lower columns, make sure that the union bolt is positioned correctly with respect to the flat on the splined shaft.

Replacement

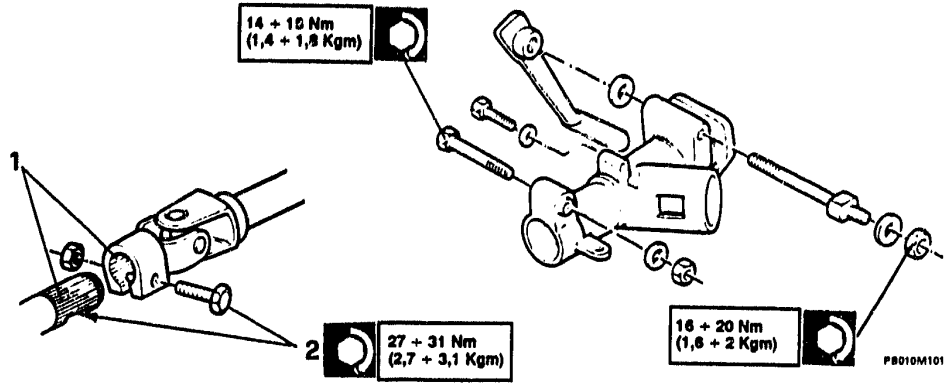

- Refit the steering column to the vehicle in the reverse order of removal, and observing the following instructions in this order.

Make sure that the steering column is not subjected to any undue stress when refitting to the vehicle.

- Straighten up the wheels.
1. Re-attach the lower cardan joint.
2. Fit the union bolt, making sure it is correctly positioned with respect to the flat on the splined shaft.

- Set the steering wheel height adjuster so that the lever clamps properly in the desired position.
- With all parts fully tightened, make sure that the steering wheel operates correctly in its highest and lowest positions.
- After refitting, ensure that the indicator switch unit and horn button assembly operate correctly.

STEERING LOCK - IGNITION SWITCH
Removal and replacement

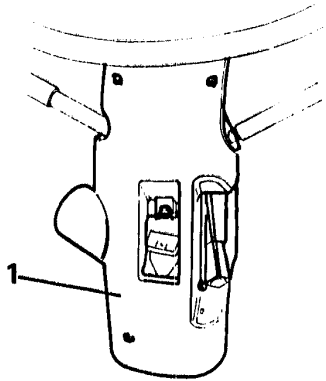

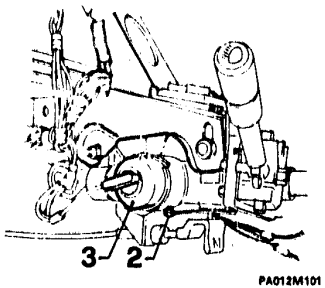

1. Remove the lower nacelle half (see 23-5).
- Disconnect the cables.
2. Remove the shear-head screw.
3. Remove the steering lock assembly.
- When re-assembling, drive in screw (2) until the head shears off.

Check the condition of cables and connectors.
Check that the unit operates correctly in all the key positions.
Make sure the steering lock functions.

STEERING LINKAGE

ASSEMBLY

NEW SOLUTION from chassis serial number 5756209

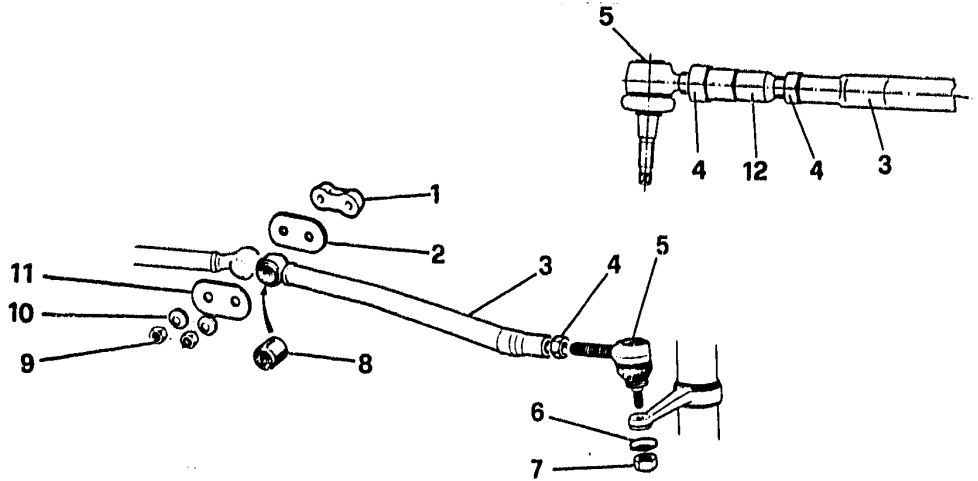

1 Spacer
2 Plate
3 Tie rod
4 Nut
5 Ball joint
6 Washer
7 Nut
8 Flexible joint
9 Nut
10 Washer
11 Plate
12 Connection

REMOVAL

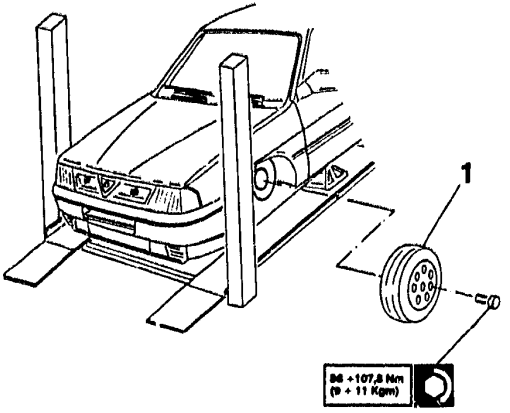

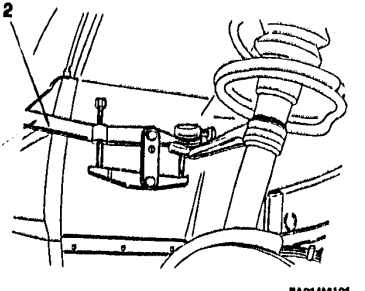

1. Remove the front road wheels.
- Remove the ball joint nuts.

2. Using tool N° 1.821.169.000 (A.3.0633), separate the ball joints.

REMOVAL (Continued)

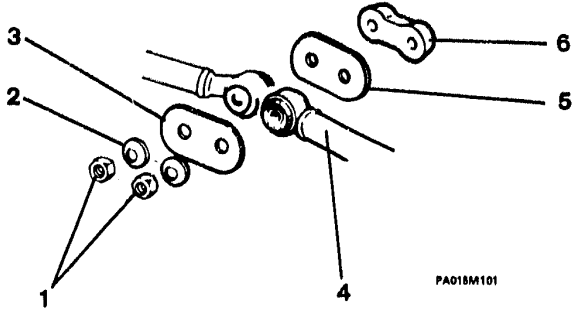

- Steer the wheels to the right.
1. Undo the nuts.
2. Recover the washers.
3. Recover the plate.
4. Remove the tie rods.
5. Recover the plate.
6. Recover the spacer.

DISMANTLING AND RE-ASSEMBLY

NEW SOLUTION from chassis serial number 5756209

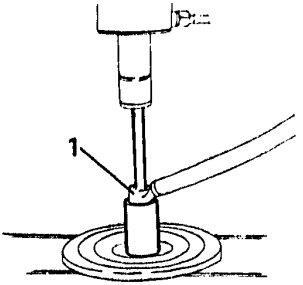

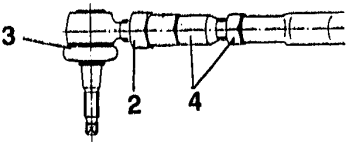

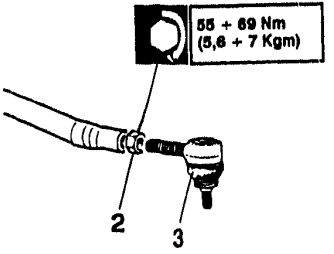

1. Using a press, mandrel and baseplate, extract the flexible joints.
2. Slacken the lock nut.
3. Unscrew the ball joint.
4. From chassis N° 5756209 unscrew the nut and remove the connection.

- Measure the distance the joint projects from the housing, for re-assembly purposes.

REPLACEMENT NEW SOLUTION from chassis serial number 5756209

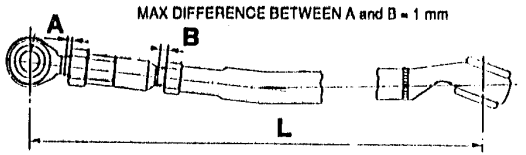

- From chassis serial number 5756209 regular the L distance at prescribed values before the refitting of tie rods:

L (mm)	
for petrol driven vehicles with power steering	553.5 ± 0,5
for diesel vehicles with power steering	531.5 ± 0,5
for petrol driven vehicles with mechanical steering	561.8 ± 0.5

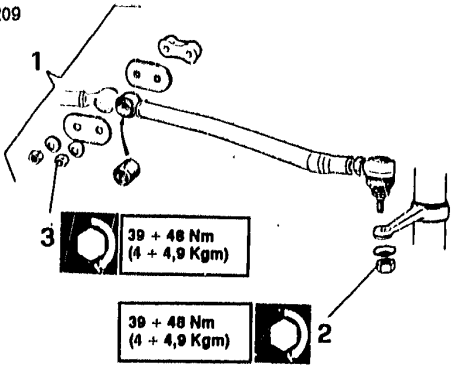

1. Refit the tie-rods on the studs of the steering box and fix them with the plate, washers and nuts without locking them.
2. Re-connect the tie-rods to the levers on the guide hoses and tighten the nuts of the pins on the spherical joints to the correct torque.
   - When tightening the nuts ensure that, in the static load position, the upper plane of the spherical head is parallel to the reating plane of the gasket.
3. Lock the nuts securing the flexible joints to the studs of the rack with the front suspension at nominal trim corresponding to the static load.
   - Check the toe-out (see **GR. 21**).

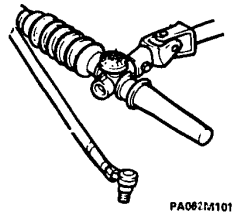

PA062M101

STEERING RACK

STEERING RACK

ASSEMBLY ..... 23 - 17
REMOVAL AND REPLACEMENT ..... 23 - 18
DISMANTLING ..... 23 - 20
INSPECTION AND CHECKING ..... 23 - 25
RE-ASSEMBLY ..... 23 - 26

STEERING RACK

ASSEMBLY

1 Top cap
2 Adjusting screw
3 Spring
4 Pressure nut
5 Seal
6 Bush
7 Rack housing
8 LH end cap
9 Pinion
10 Bearing
11 Circlip
12 Circlip
13 Bottom cap
14 Bellows
15 Rack tube
16 Clip
17 Bush
18 Support tube
19 RH end cap
20 Link block
21 Studs
22 Rack

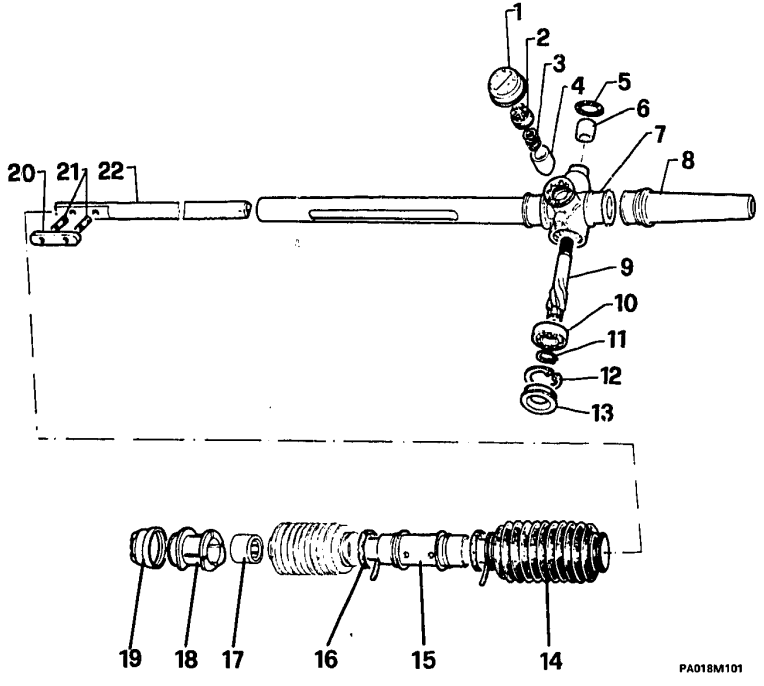

REMOVAL AND REPLACEMENT

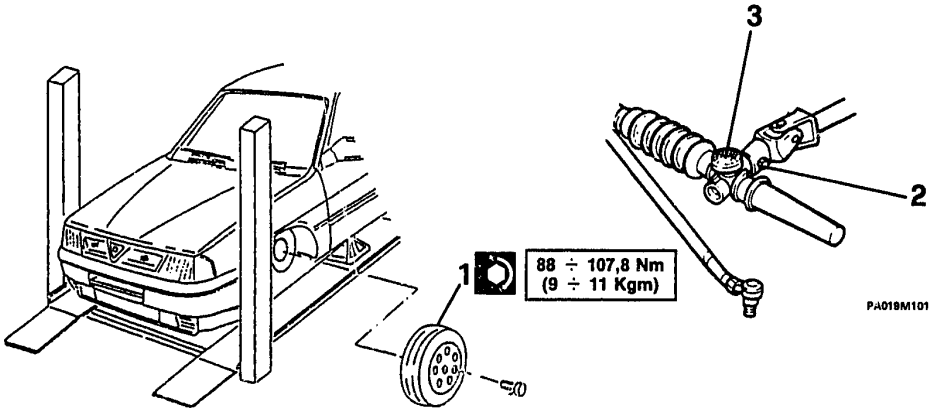

1. Remove the LH front road wheel.
- Remove the tie-rods from the steering rack.
2. Remove the lower cardan joint retaining bolt.
3. Remove the plastic cap.

REMOVAL AND REPLACEMENT (Continued)

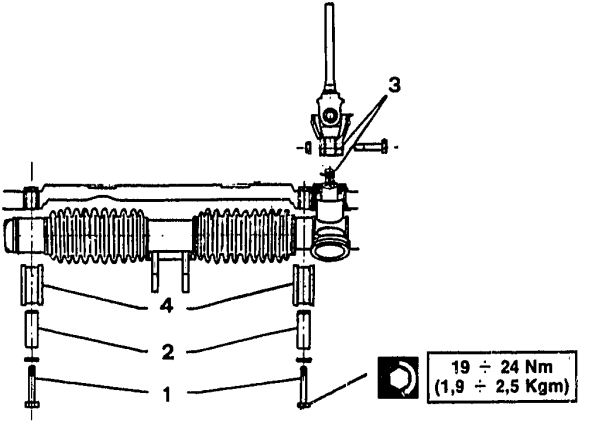

1. Remove the bolts holding the steering rack to the body.
2. Remove the mounting support tubes.
3. Remove the steering rack unit, freeing the pinion from the cardan joint.
4. Remove the rubber mountings.

DISMANTLING

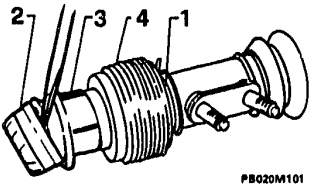

PB020M101

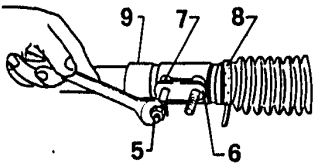

PB020M102

1. Remove the RH bellows clip.
2. Remove the end cap.
3. Pull off the plastic support.
4. Withdraw the RH bellows.

The plastic support must be substituted every time it is removed from the steering rack, for whatever reason.

5. Unscrew and remove the studs.
6. Remove the plate.
7. Remove the spacer.
8. Remove the LH bellows clip.
9. Withdraw the sliding tube from the rack housing.

DISMANTLING (Continued)

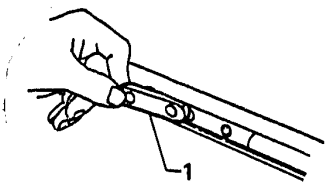

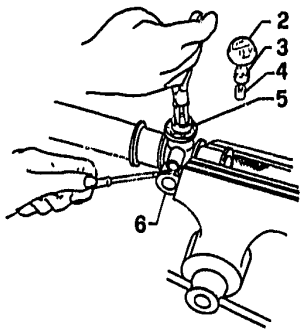

1. Extract the sliding block from the guide tube.
2. Remove the cap.
3. Undo the adjusting screw.
4. Remove the spring.
5. Remove the pressure nut.
6. Remove the lower cap.

DISMANTLING (Continued)

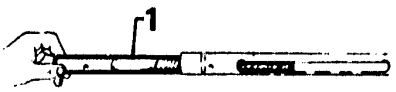

1. **Withdraw the rack from the housing.**

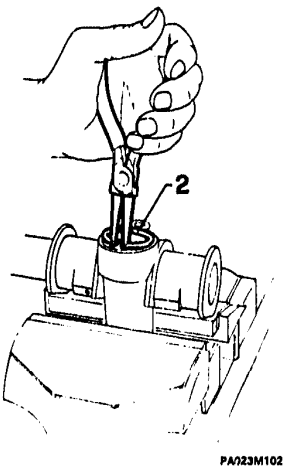

2. Remove the pinion bearing circlip from the rack housing.



DISMANTLING (Continued)

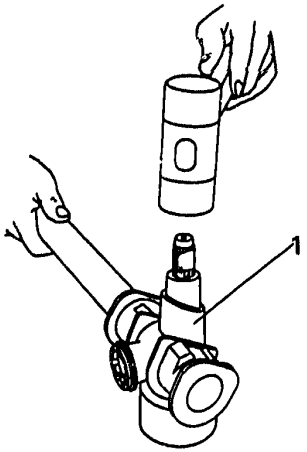

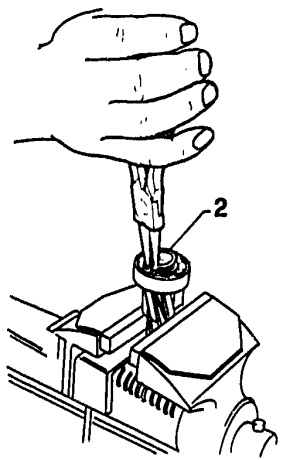

1. Remove the pinion from the rack housing, together with the bearing, using a plastic mallet and supporting base.

2. Remove the flexible ring securing the bearing onto the pinion.



DISMANTLING (Continued)

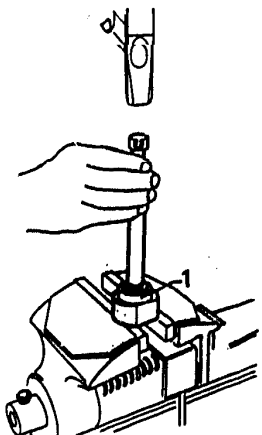

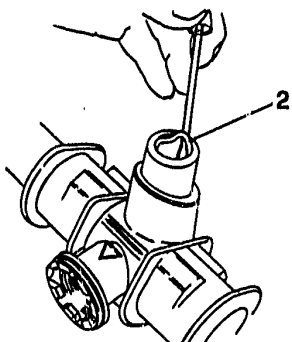

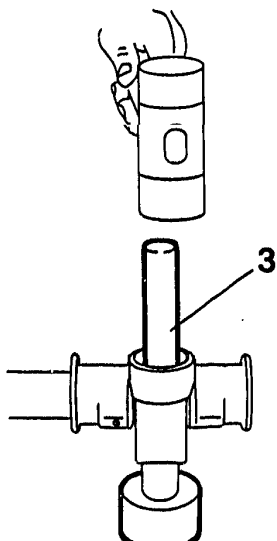

PA028M101

1. Remove the bearing from the pinion.
2. Remove the oil seal.
3. Extract the pinion bush.

INSPECTION AND CHECKING

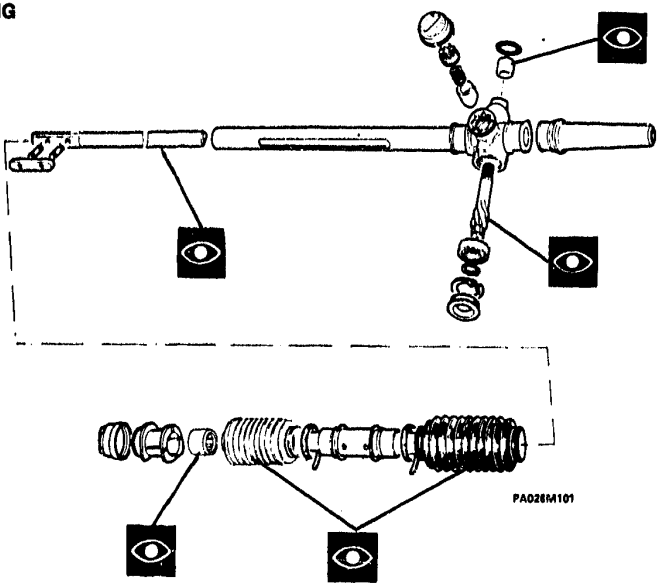

Make sure that the pinion working surface, and the rack tube bearing surfaces at the bush seats are smooth and free from signs of wear.

RE-ASSEMBLY

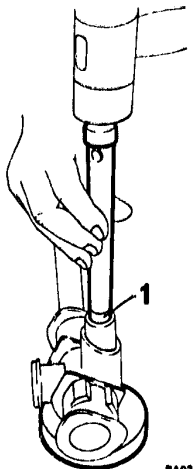

PA027M101

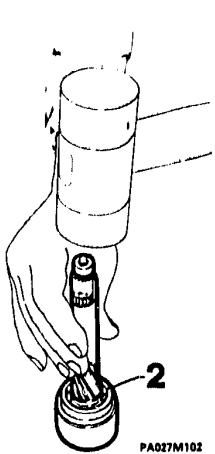

PA027M102

- Carry out re-assembly in the reverse order of dismantling, observing the following instructions.

1. Refit the self-lubricating pinion bush in the rack housing using a suitable insertion tool, and fit a new oil seal.

2. Refit the bearing to the pinion using a plastic mallet and suitable base.

RE-ASSEMBLY (Continued)

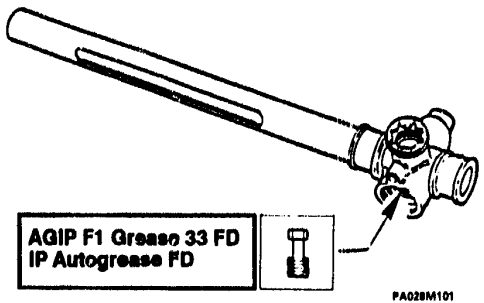

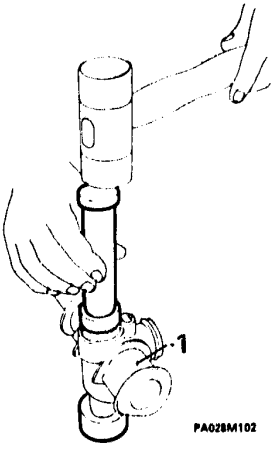

- Refill the steering rack housing with the specified grease.
- Lubricate the pinion bush.

1. Refit the pinion using a punch and plastic mallet, with a suitable base.

RE-ASSEMBLY (Continued)

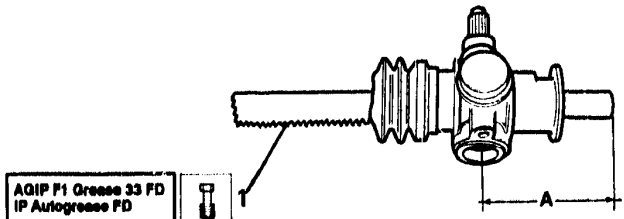

PA028M101

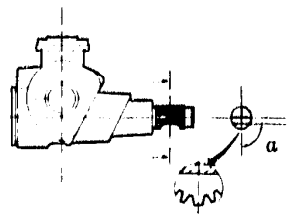

PA028M102

Rack - pinion positioning references
A = 125 mm

Pinion angle
α = 90° ± 26°

Use pressure nut and adjusting screw of the same material (plastic or metal).

1. Lubricate the rack.

- Insert it in the rack housing, having first positioned the pinion so that the distance "A" is obtained with the rack fitted, and with the pinion orientated so that the flat points down, forming angle α as specified.

RE-ASSEMBLY (Continued)

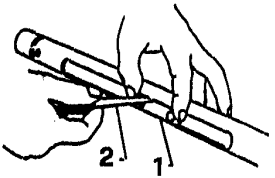

PA030M101

MAXIMUM PLAY "G" BETWEEN SLIDER AND SLOT	
With re-used rack tube	With new rack tube
0,1 mm	0,044 mm

- Select the rack slider according to the type of rack tube used, as follows:

a. Re-using old rack tube.

1. Make sure that the slider runs freely along the whole length of the rack tube when pushed lightly by hand.
2. Using feeler gauges, check that float "G" between slider and slot does not exceed the specified value in any position.
- If this float value is not obtained, select another slider fro the range of thicknesses available until the above conditions are satisfied.
- If tollerance "G" cannot be obtained using the available sliders, replace the rack tube.

b. Using new rack tube.

1. Replace the old slider with a new spare having the same colour code as the rack tube (paint blob).
2. Ensure that float "G" meets the specifications.

RE-ASSEMBLY (Continued)

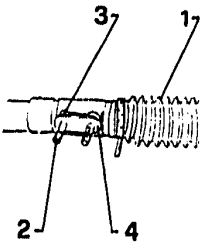

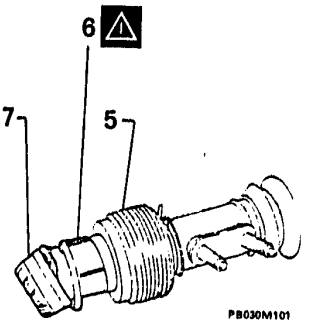

- Lubricate the inside of the sliding tube and outer surface of the rack tube with 15 g of grease.

AGIP F1 Grease 33 FD
IP Autogrease FD

1. Refit the LH bellows.
- Refit the slider.
2. Insert the studs.
3. Fit the spacer.
4. Fit the plate.
5. Refit the RH bellows.
6. Fit a new guide tube support, making sure that the inner tooth fits into the seating in the tube.
7. Fit the end cap.

RE-ASSEMBLY (Continued)

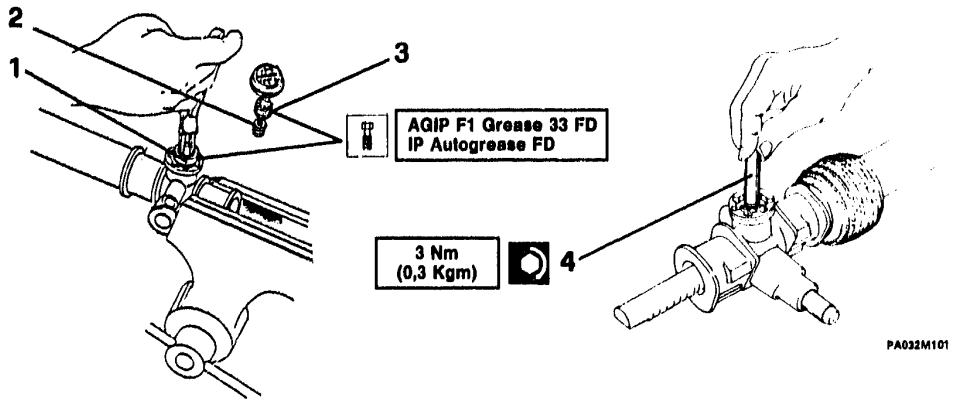

1. With the rack in the central position, fit the pressure nut.
2. Fit the spring.
3. Fit the adjusting screw.
- Adjust the pinion - rack play as follows:
4. Tighten the adjustment screw to the specified torque using a suitable tool.

RE-ASSEMBLY (Continued)

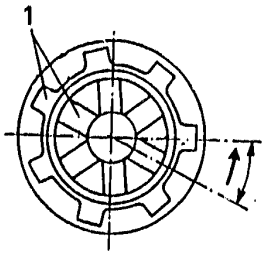

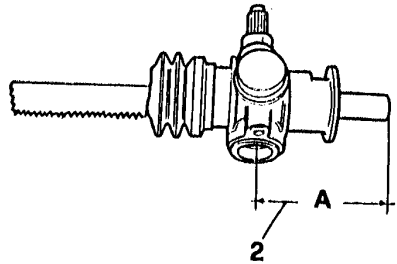

	Datum line for pinion-rack location
	A = 125 mm

1. Identify the plug rib closest to the index mark on the rack housing, and then unscrew the plug half a turn so that the rib diametrically opposite now lines up with the index mark.
- Make sure that the pinion drives the rack freely from stop to stop in both directions without snags.
- Close the bellows retaining clips, making sure that the bellows are not twisted by keeping their moulding lines straight.
2. Centre the guide travel, obtaining distance A.

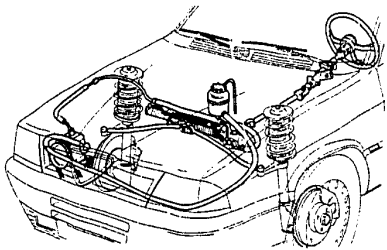

POWER STEERING RACK UNIT

POWER STEERING RACK UNIT

POWER STEERING SYSTEM CHART .....23 - 33
DESCRIPTION .....23 - 34
REMOVAL AND REPLACEMENT .....23 - 35
CHECKING LEVEL AND REFILLING THE POWER STEERING SYSTEM.....23 - 44

POWER STEERING RACK UNIT

POWER STEERING SYSTEM CHART

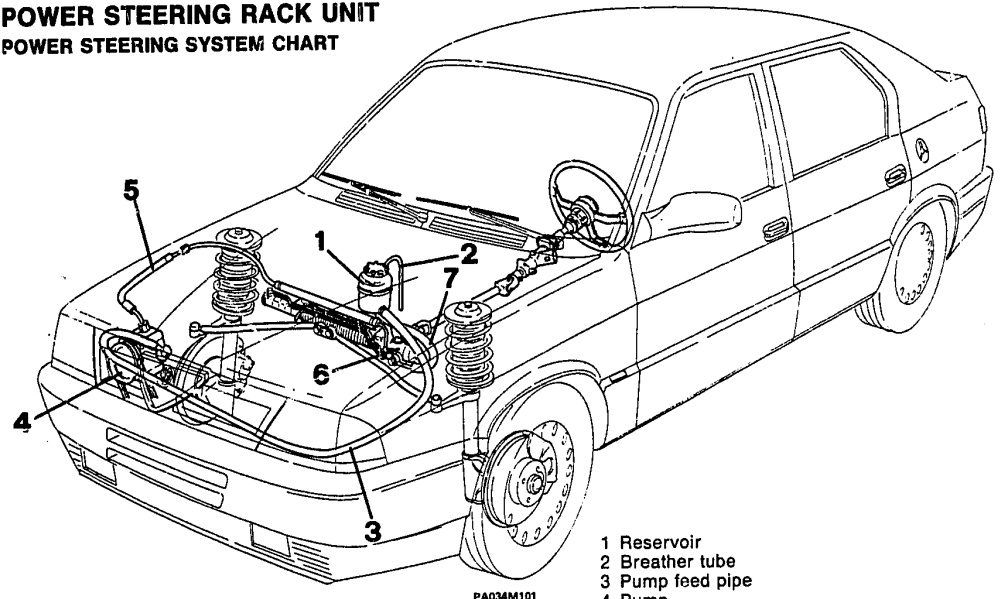

PA034M101

1 Reservoir
2 Breather tube
3 Pump feed pipe
4 Pump
5 Pump pressure pipe to power steering rack unit
6 Power steering rack unit
7 Return pipe to reservoir

DESCRIPTION

The system reduces the effort required at the steering wheel during maneouvers at rest or low speed, while maintaining sensitive, direct and precise steering at higher speeds. The system is also self-bleeding: any air in the hydraulic circuit is eliminated by turning the wheels from lock to lock with the engine running and the car stationary.
The steering column arrangement, featuring two cardan joints for constant-velocity transmission from steering wheel to rack, makes steering wheel effort extremely uniform.
The steering rack mounted well back in the vehicle togther with the jointed steering column offer major passive safety in the event of frontal impact.

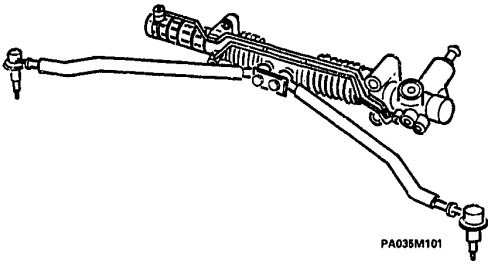

PA035M101

REMOVAL AND REPLACEMENT

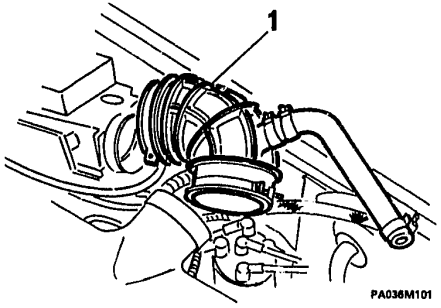

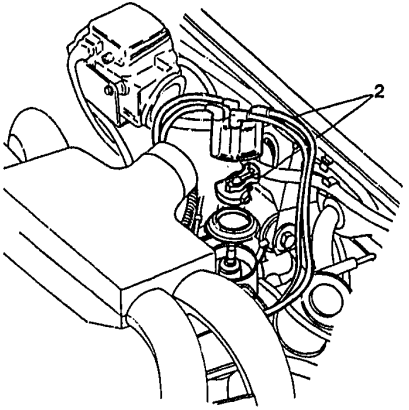

- Position the vehicle on a hydraulic lift.
1. Remove the corrugated air hose between debimeter and air box, complete with blow-by pipe.
2. Remove the distributor cover and wiper arm, leaving the HT leads connected.

⇩

REMOVAL AND REPLACEMENT (Continued)

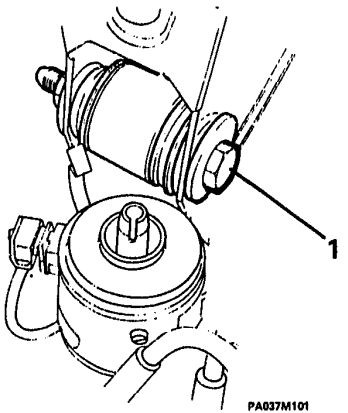

1. Slacken the central engine mounting bolt.

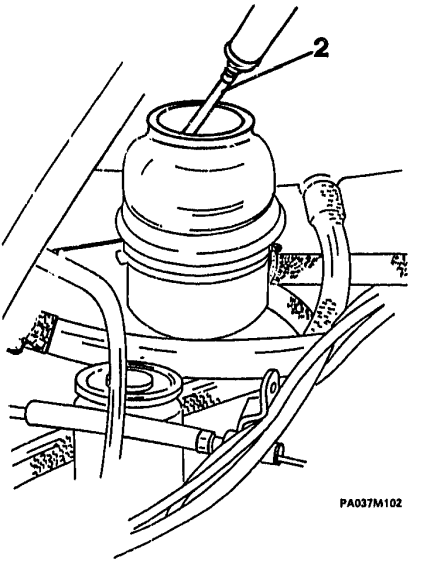

2. Suck up the power steering fluid from the reservoir using a syringe.

⇩

REMOVAL AND REPLACEMENT (Continued)

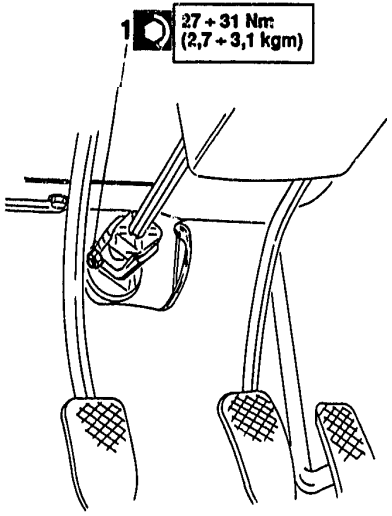

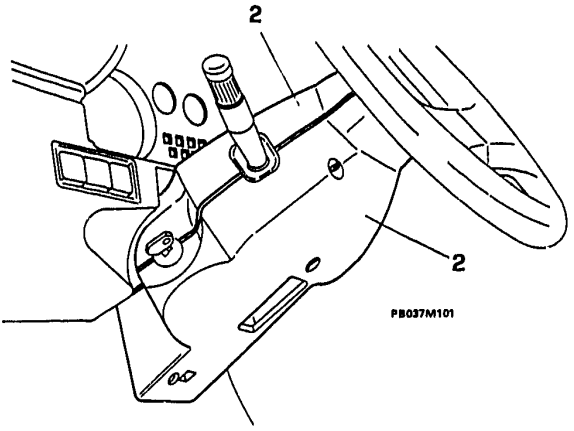

1. Remove the bolt uniting the lower cardan joint with the steering rack unit.
2. Remove the 5 scres holding the steering column nacelle halves together, and remove them.

REMOVAL AND REPLACEMENT (Continued)

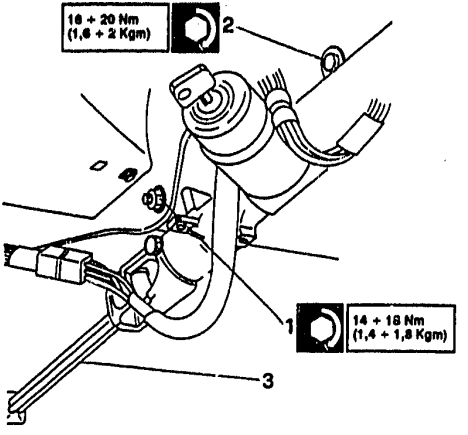

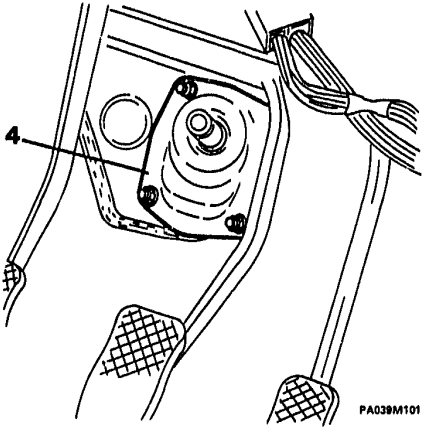

1. Remove the steering column bracket mounting bolt.
2. Slacken the steering wheel height-adjuster lever screw.
3. Withdraw the steering column from the steering rack pinion.
4. Remove the lower steering column cardan joint inspection cover.

- Jack the front of the vehicle, then set it on stands placed under the jacking points.
- Remove the front road wheel.

REMOVAL AND REPLACEMENT (Continued)

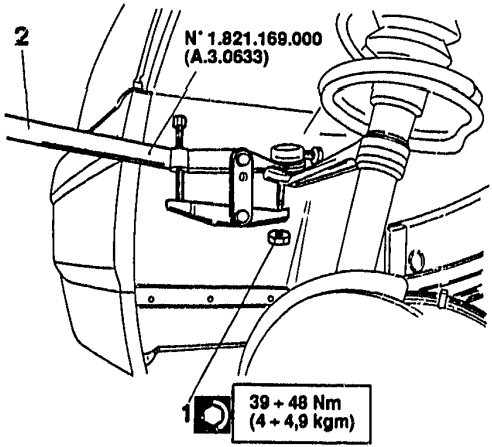

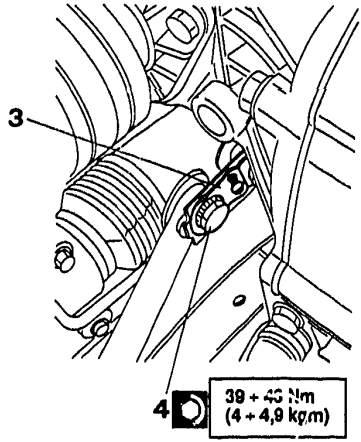

1. Renove the ball joint retaining nuts.
2. Using extractor N° 1.821.169.000 (A.3.0633), withdraw the tie rod ball joints from the steering arms.
   - Turn the wheels to the right to ease removal of the tir rods from the power steering rack.
3. Remove the safety tabs on the tie rod bolts.
   . Remove the steering tie rod bolts from the steering rack.
   - Recover the tie-rods.

On re-assembly, mount the tie rods with the wheels straight.

- Remove the front LH spring - shock absorber assembly (see **UN. 21**)

REMOVAL AND REPLACEMENT (Continued)

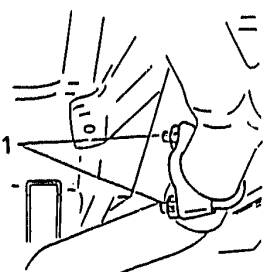

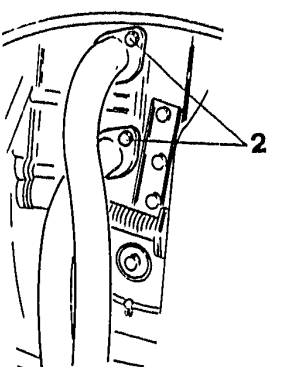

PA041M103

1. Slacken the exhaust clamp between the first and second exhaust manifold sections.

2. Disconnect the manifold sections from the cylinder heads and remove the first section.



REMOVAL AND REPLACEMENT (Continued)

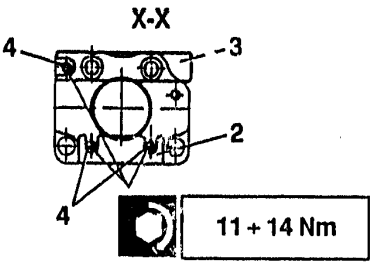

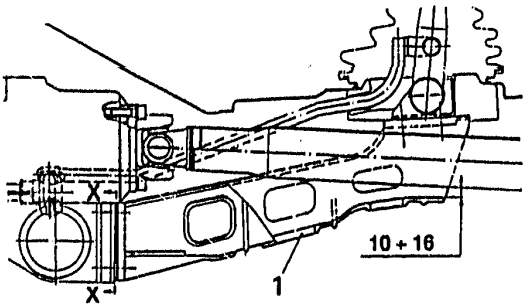

1. Remove the gear lever support (for 4x4 versions).
- When refitting the gear control lever it is necessary to check that it is the correct distance away from the drive shaft.

If it is not it is possible to operate as follows:

- Raise the vehicle.
- Check the distance between the support and the drive shaft.
- If the values is above 16 mm it will be necessary to insert one or more shims (2) under the lower nuts.
- If the value is below 10 mm it will be necessary to insert one or more shims (3) under the upper nut.
- Tighten the nuts (4) to the correct torque.

N.B. Each 0.5 mm shim will vary the value by ~ 3.5 mm.

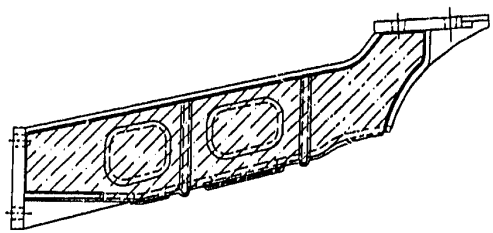

NOTE: Starting from chassis number 5822286, an off-loaded gear lever support has been fitted and the distance from the drive shaft need not be checked.

REMOVAL AND REPLACEMENT (Continued)

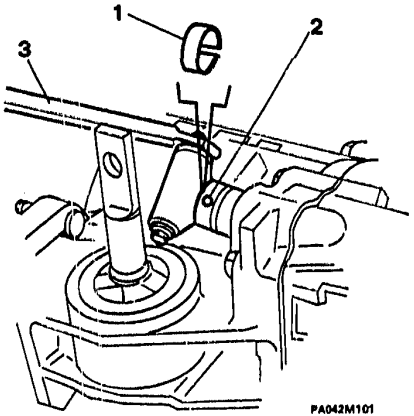

1. Remove the snap ring.
2. Remove the retaining pin.
3. Remove the gear lever.

- Place a suitable column jack fitted with special support under the gearbox.
- Lift the engine-gearbox unit sufficiently to remove the central mounting bolt slackened previously.
- Remove the two bolts holding the rear engine mounting bar to the body.
- Loweer the engine-gearbox unit enough to allow the subsequent removal operations to be carried out.

REMOVAL AND REPLACEMENT (Continued)

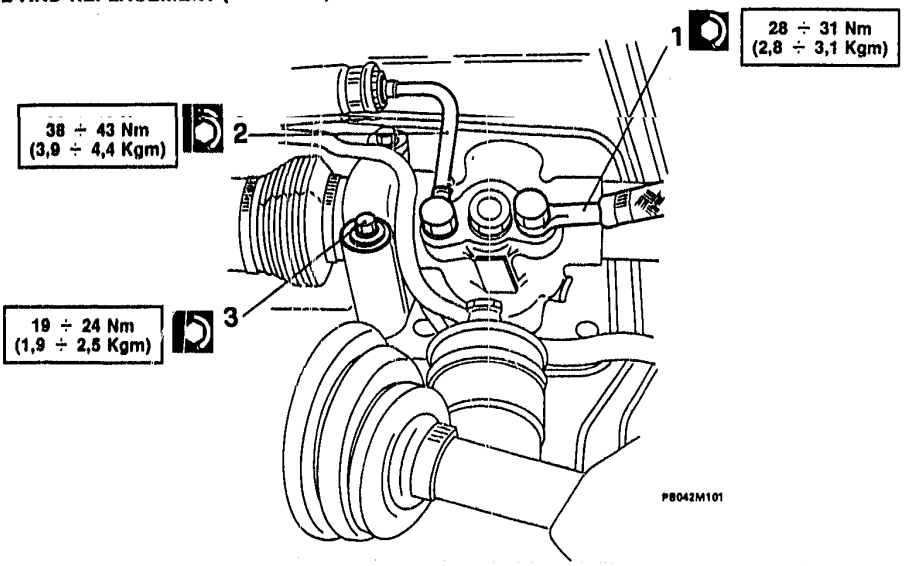

1. Remove the reservoir return pipe.
2. Remove the power steering pressure pipe (from pump).
3. Slacken the 4 bolts holding the power steering rack to the body.

- Withdraw the power steering rack through the tie rod hole in the LH inner wheel arch panel.

After refitting check the wheel toe-out (see UN. 21).

CHECKING LEVEL AND REFILLING THE POWER STEERING SYSTEM

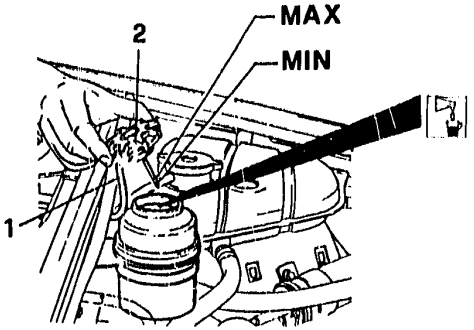

- Proceed with the vehicle on a level surface and with the wheels straight (not turned).
1. Pull off the breather hose from the cover.
2. Remove the cover.
- Check that the fluid is level with the MAX mark.

Otherwise top-up using the specified fluids (see TSN) operating as follows:

- Start the engine and wait until the level of the fluid in the reservoir stabilizes.
- With the engine running, repeatedly rotate the steering wheel right and left.
- With the wheels straight top-up until the fluid is level with the MAX mark.
- Push the breather hose back on and refit the reservoir cover.

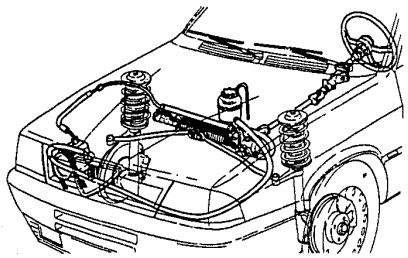

POWER STEERING RACK UNIT
(Specific for versions 33 TD Intercooler and Sport Wagon TD Intercooler)

TECHNICAL SPECIFICATIONS AND NOTES

SPECIAL TOOLS

POWER STEERING RACK UNIT

POWER STEERING SYSTEM CHART ..... 23 - 45
DESCRIPTION ..... 23 - 46
REMOVAL AND REPLACEMENT ..... 23 - 47
CHECKING THE LEVEL AND REFILLING THE POWER STEERING SYSTEM ..... 23 - 55
POWER STEERING SYSTEM CHART (Specific for versions with RH drive) ..... 23 - 56

TECHNICAL SPECIFICATIONS AND NOTES

FLUIDS AND LUBRICANTS ..... 23 - 57
INSPECTION AND CHECKING ..... 23 - 58
TIGHTENING TORQUES ..... 23 - 59

SPECIAL TOOLS ..... 23 - 60

POWER STEERING RACK UNIT

POWER STEERING SYSTEM CHART

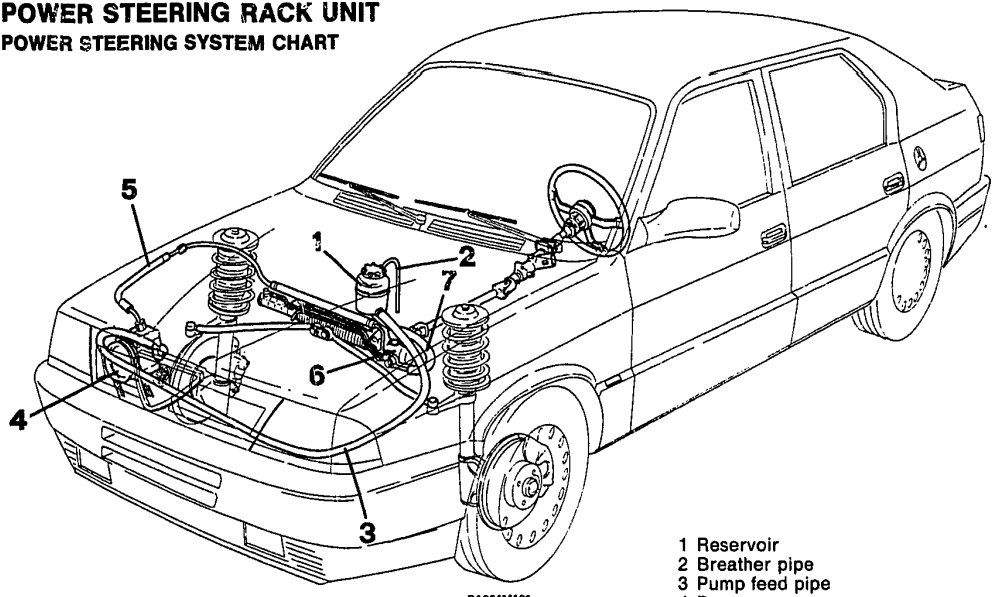

PA034M101

1 Reservoir
2 Breather pipe
3 Pump feed pipe
4 Pump
5 Steering rack feed pipe
6 Power steering rack
7 Reservoir return pipe

DESCRIPTION

The system reduces the effort involved at the steering wheel during maneouvres at rest or low speed, while maintaining sensitive, direct and precise steering at higher speeds. The system is also self-bleeding: any air in the hydraulic circuit is eliminated by steering completely from lock to lock with the engine running and the car stationary.
The steering column arrangement, featuring two cardan joints for constant-velocity transmission from steering wheel to rack, makes the effort required at the steering wheel extremely uniform.
The steering rack unit mounted rearward in the vehicle, together with the jointed steering column, offers major passive safety in the event of frontal impact.

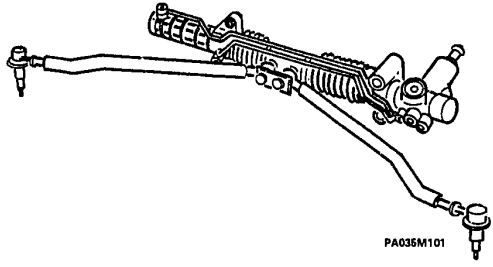

REMOVAL AND REPLACEMENT

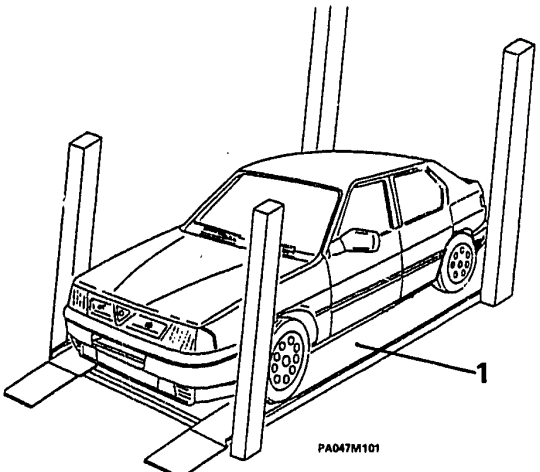

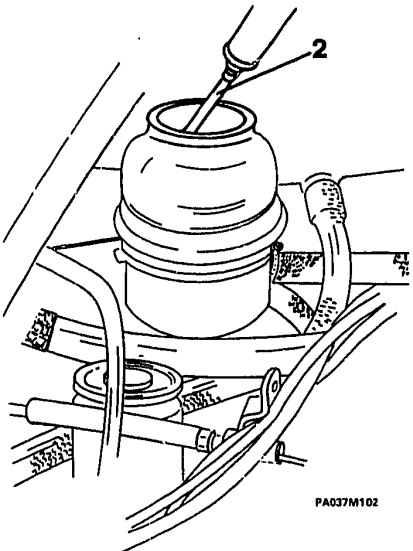

1. Position the vehicle on a hydraulic lift.
- Disconnect the battery negative lead.

2. Suck up the power steering oil from the reservoir with a syringe.

REMOVAL AND REPLACEMENT (Continued)

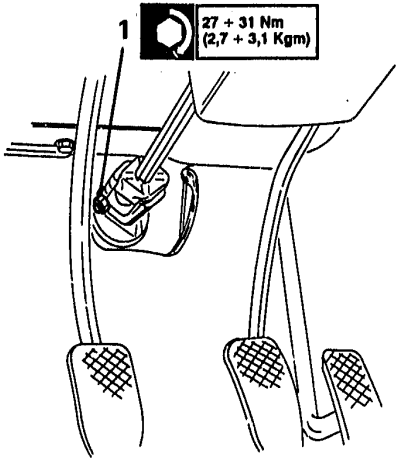

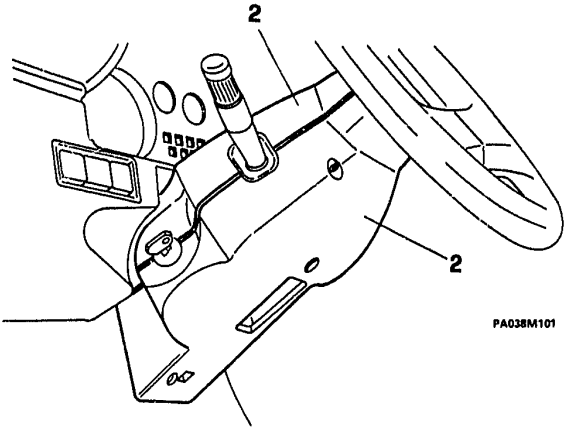

1. Remove the lower cardan joint bolt at the union with the steering rack pinion.

2. Remove the 5 screws holding the steering column nacelle halves together, and remove the nacelle.

REMOVAL AND REPLACEMENT (Continued)

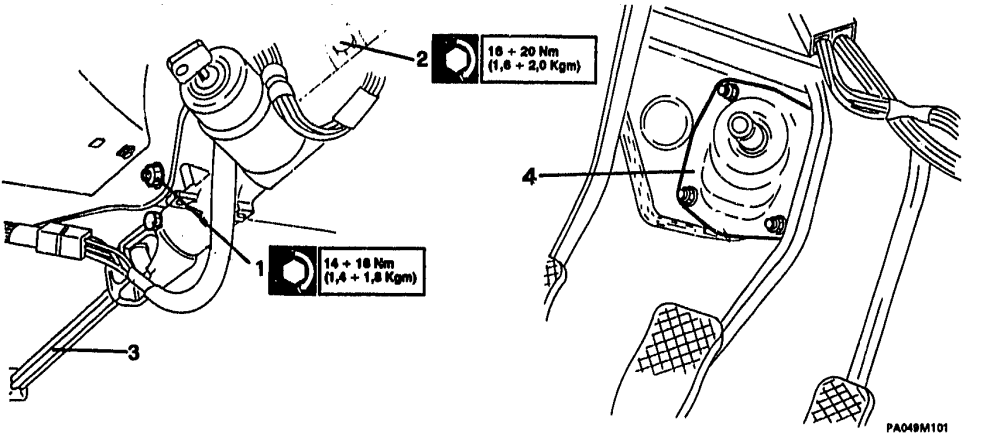

1. Remove the steering column bracket mounting bolt.
2. Slacken the steering wheel height-adjuster lever screw.
3. Remove the steering column from the steering rack.
4. Remove the lower steering column cardan joint cover.

- Jack the front of the vehicle and support it on stands placed under the jacking points.
- Remove the front road wheels.

REMOVAL AND REPLACEMENT (Continued)

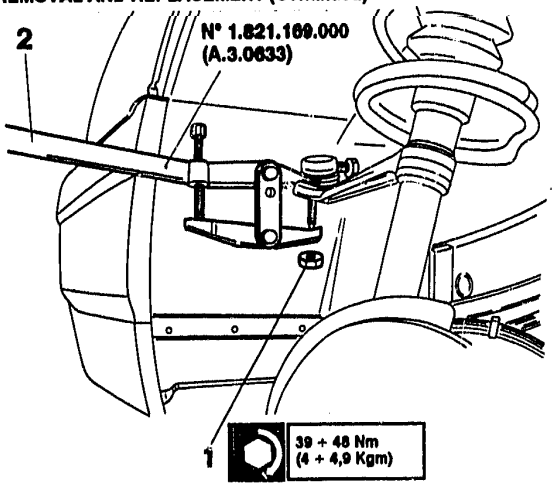

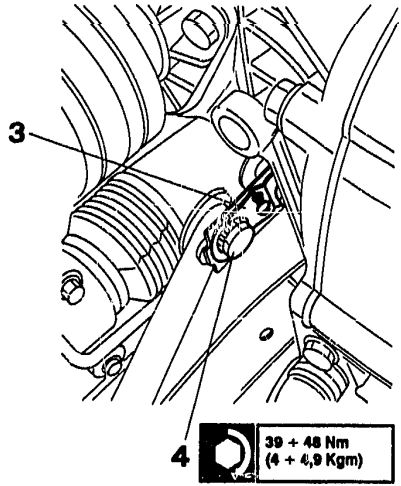

1. Remove the ball-joint retaining nuts.
2. Using extractor N° 1.821.169.000 (A.3.0633), pull the tie rod ball joints out of the steering arms.

- Steer the wheels to the right to ease removal of the tie-rods from the steering rack.

3. Remove the safety tabs from the tie-rod bolts on the steering rack.
4. Remove the tir-rod bolts from the steering rack.

- Recover the tie-rods.

On re-assembly, fit the tie rods with the wheels straight.

- Remove the front LH spring - shock absorber assembly (see **UN. 21**)

REMOVAL AND REPLACEMENT (Continued)

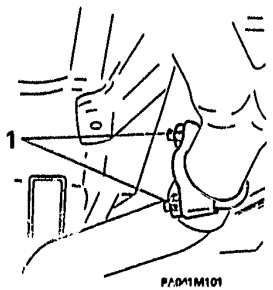

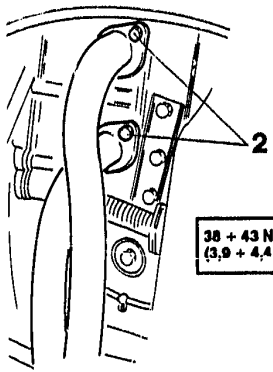

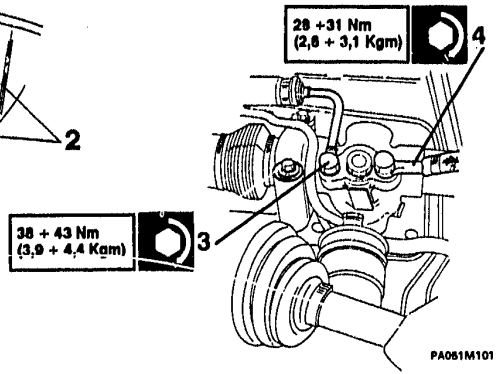

1. Slacken the exhaust clamp between the first and second exhaust manifold sections.
2. Disconnect the manifolds from the heads and remove the first and second sections.
3. Remove the steering rack feed pipe.
4. Remove the reservoir return pipe.

REMOVAL AND REPLACEMENT (Continued)

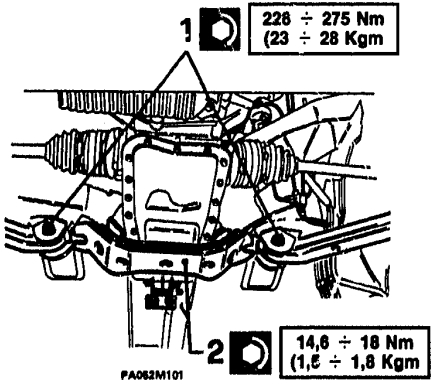

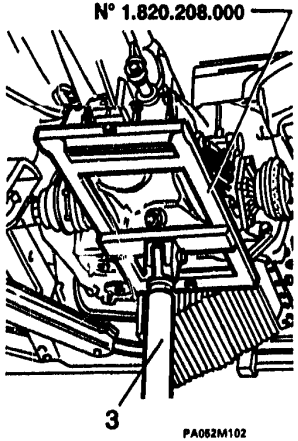

- Remove the cross-member mounting bolts.

6,6 ÷ 85,3 Nm
(7 ÷ 8,7 Kgm)

1. Remove the suspension arm bolts.
2. Remove the crossmember by unscrewing the nuts and the lateral flexible gearbox supports.
3. Place a column jack fitted with support N° 1.820.208.000 under the gearbox sump, and fix the support to the front and back ends with the relative screws.

REMOVAL AND REPLACEMENT (Continued)

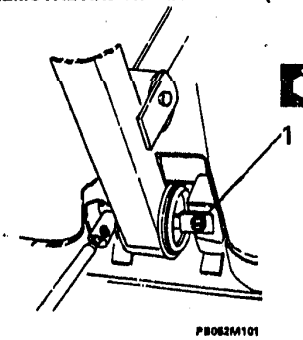

18,6 ÷ 23,5 Nm
(1,9 ÷ 2,4 Kgm)

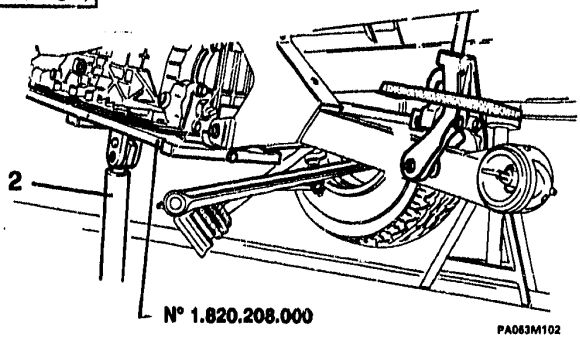

1. Remove the two rear engine-gearbox unit mounting bolts.
2. Lower the column jack under the gearbox just enough to remove the steering rack unit.

Make sure that the engine does not rest against the auxiliary bay bulkhead.
The engine must not be inclined by more than 15° with respect to its fitted position, so as to avoid damaging the front engine mountings.

REMOVAL AND REPLACEMENT (Continued)

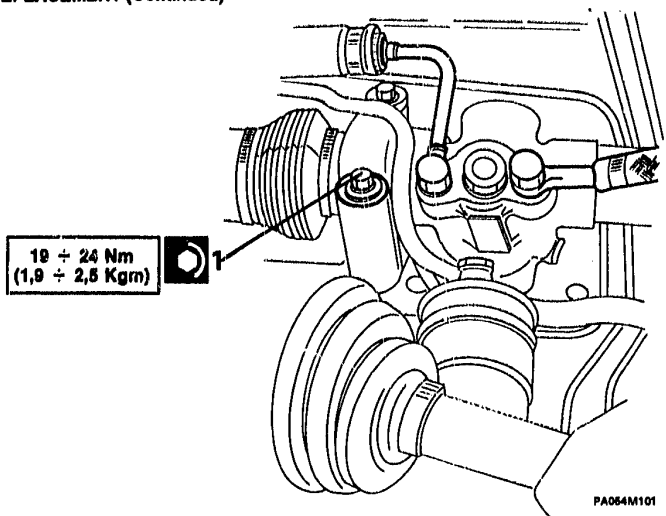

1. Remove the 4 bolts holding the power steering rack to the body.
- Withdraw the rack through the tie-rod hole in the LH inner wheel arch panel.

Following re-assembly, check front wheel toe--out (see UN. 21).

CHECKING THE LEVEL AND REFILLING THE POWER STEERING SYSTEM

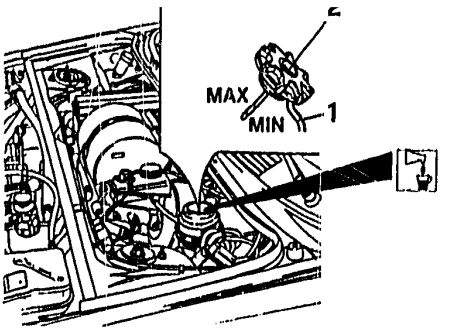

- Proceed with the vehicle on a level surface and with the wheels straight (not turned).

1. Pull off the breather hose from the cover.
2. Remove the cover.

- Check that the fluid is level with the MAX mark.

Otherwise top-up using the specified fluids (see TSN) operating as follows:

- Start the engine and wait until the level of the fluid in the reservoir stabilizes.
- With the engine running, repeatedly rotate the steering wheel right and left.
- With the wheels straight top-up until the fluid is level with the MAX mark.
- Push the breather hose back on and refit the reservoir cover.

POWER STEERING SYSTEM CHART (Specific for versions with RH drive)

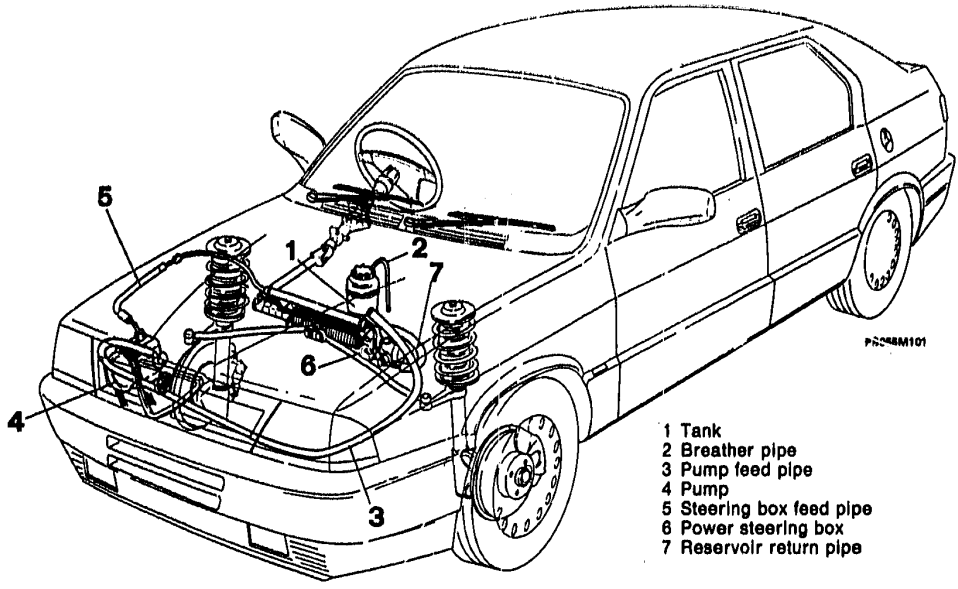

1 Tank
2 Breather pipe
3 Pump feed pipe
4 Pump
5 Steering box feed pipe
6 Power steering box
7 Reservoir return pipe

For procedures of removal and refitting, see those described for LH drive vehicles.

TECHNICAL SPECIFICATIONS AND NOTES

FLUIDS AND LUBRICANTS

APPLICATION	TYPE	PRODUCT	QTY
Steering column bracket hinge spacer (outer surface)	GREASE	AGIP F1 Grease 15	–
Steering column bearings	GREASE	AGIP F1 Grease 33 FD	–
Steering rack (outer surface)		IP Autogrease FD	
Pinion bush			
Rack - pinion pressure nut			
Adjustment screw (on thread)			
Sliding rack tube (inner surface)			15 g
Rack housing (inside chamber)			40 g
Tie rod silenbloc outer surfaces	GREASE	UNION CARBIDE CHEMICALS COMPANY: Ucon lubricant 50 HB - 5100 MILLOIL: rubber lubricant	–
Power steering rack unit	OIL	IP DEXRON FLUID II AGIP DEXRON II TUTELA GI/A	0,9 ÷ 1,1 l

INSPECTION AND CHECKING

Distance "A" for centering the rack in its guide tube

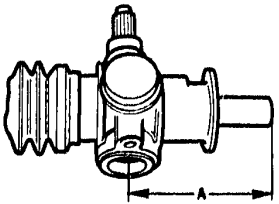

PA067M101

A	mm	125

Angle α for positioning pinion flat (with rack centered at distance A).

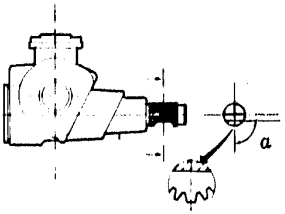

PA029M102

α	degrees	90 ± 26

Steering rack slider float. The slider thicknesses available are identified by blobs of coloured paint in the following ascending order:
white yellow red green black-blue

Maximum float "G" between slider and slot

G = 0,1 mm

TIGHTENING TORQUES

COMPONENT \ UNITS	N.m	kg.m
Ball-joint nuts	39 ÷ 48	4 ÷ 4,9
Steering wheel nut	17 ÷ 21	1,7 ÷ 2,1
Tie rod nuts on steering rack	39 ÷ 48	4 ÷ 4,9
Cardan joint bolts	27 ÷ 31	2,7 ÷ 3,1
Lower steering column bracket mounting bolt	14 ÷ 18	1,4 ÷ 1,8
Upper steering column bracket mounting bolt (*)	16 ÷ 20	1,6 ÷ 2,0
Tie rod ball joint adjuster nut	55 ÷ 69	5,6 ÷ 7
Steering rack unit mounting bolts	19 ÷ 24	1,9 ÷ 2,5
Power steering pump intake pipe union	45 ÷ 50	4,6 ÷ 5,1
Power steering pump output pipe union	45 ÷ 50	4,6 ÷ 5,1
Power steering rack feed pipe union	38 ÷ 43	3,9 ÷ 4,4
Power steering rack return pipe union	28 ÷ 31	2,8 ÷ 3,1

* with steering wheel height adjuster in locked position

SPECIAL TOOLS

1.821.106.000 (A.3.0451/12)	Steering wheel puller	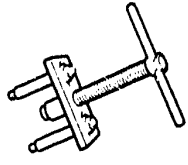 PA060M101
1.821.169.000 (A.3.0633)	Steering link ball-joint extractor	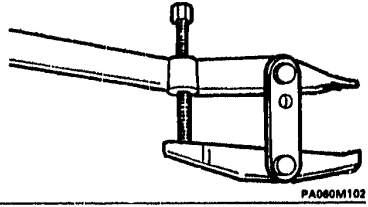 PA060M102
1.820.208.000	Engine-gearbox unit removal and refitting tool	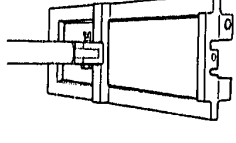 PA060M103

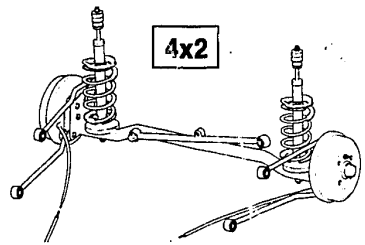

P4047N101

REAR SUSPENSION

REAR WHEEL ALIGNMENT

REAR WHEEL CAMBER AND TOE-OUT

REAR SUSPENSION

ASSEMBLY ..... 25 - 1
DESCRIPTION ..... 25 - 2
SHOCK ABSORBERS AND COIL SPRINGS ..... 25 - 3
Removal and replacement ..... 25 - 3
Inspection an checking ..... 25 - 6
RIGID REAR AXLE ..... 25 - 7
Removal and replacement ..... 25 - 7
Dismantling and reasssembly ..... 25 - 9
Inspection and checking ..... 25 - 11

REAR WHEEL ALIGNMENT ..... 25 - 12

REAR WHEEL CAMBER AND TOE-OUT ..... 25 - 15

REAR SUSPENSION

ASSEMBLY

1 Top cup
2 Grommet
3 Bottom cup
4 Top gasket
5 Top cap
6 Shock absorber
7 Helical spring
8 Shock absorber fastening clevis
9 Upper tie rod
10 Stud bolt plate
11 Stub axle
12 Gaskets
13 Lower tie rod
14 Braking adjuster spring
15 Panhard rod
16 Pin
17 Rear axle

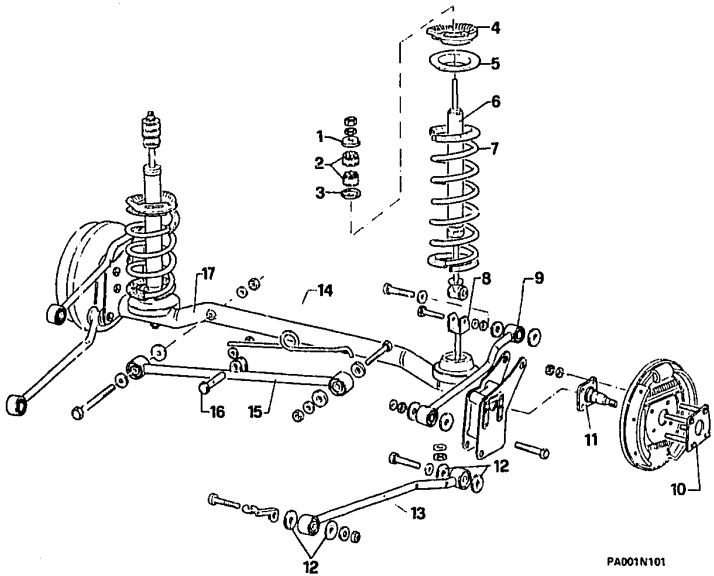

DESCRIPTION

Modifications to the rear four-strut suspension involve a change from backward to forward orientation of the upper links.
In has thus been possible to reduce passenger-compartment noise to a minimum by anchoring the all the struts to a particularly rigid area on the underbody.
From the wheel geometry viewpoint the new suspension barely differs from its predecessor in that wheel centre excursions follow more or less the same trajectory.

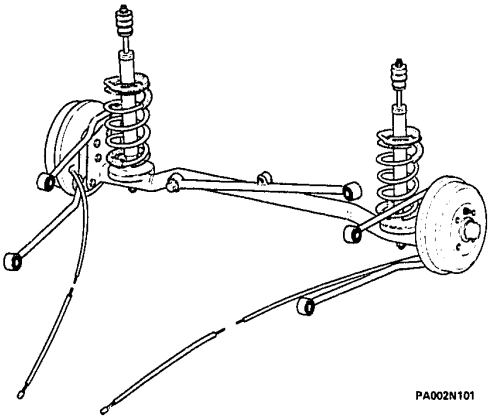

PA002N101

SHOCK ABSORBERS AND COIL SRPINGS
Removal and replacement

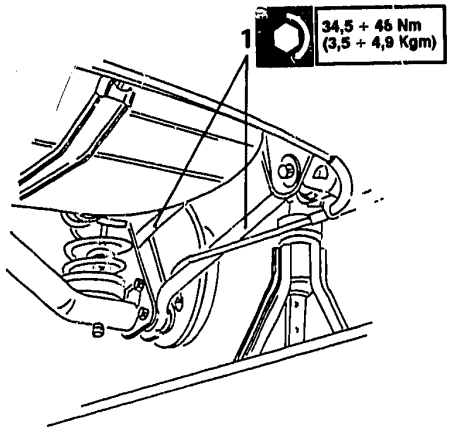

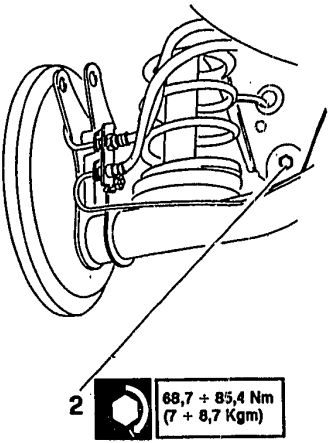

- Choc the front wheels, jack the vehicle rear and support it on safety stands.
- Remove the road wheels.

1. Free the suspension linkbolts from the body.
2. Free the Panhard rod bolt from the body.

Removal and replacement (Continued)

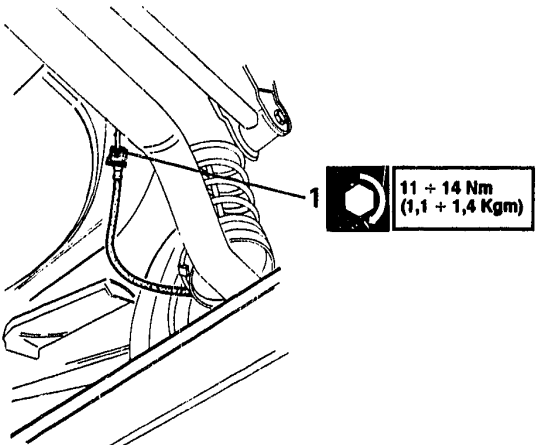

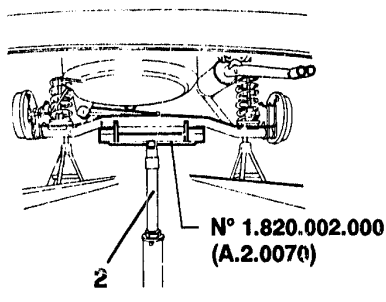

1. Undo the brake pipe union and withdraw the hose from the support bracket.
   Plug the end of the brake pipe.

2. Place a column jack fitted with support N° 1.820.002.000 (A.2.0070) under the axle and lift it so as to free the shock absorbers from the back stops.

⇩

Removal and replacement (Continued)

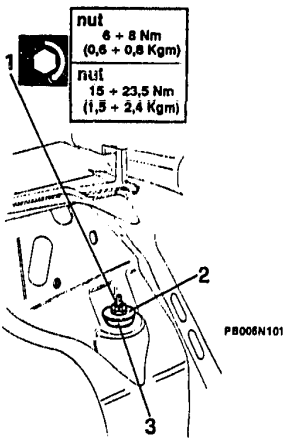

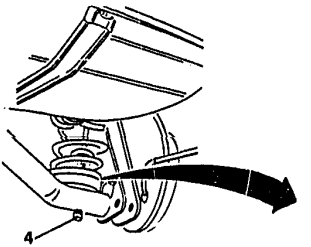

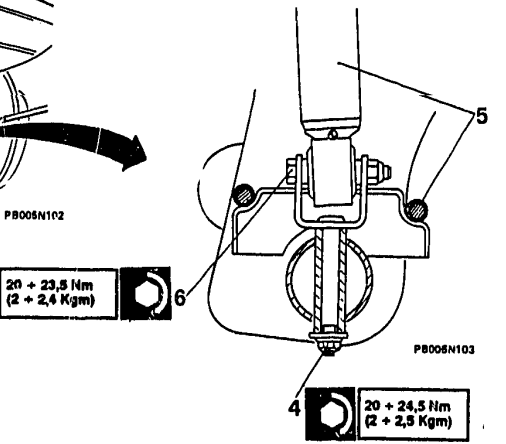

1. Unscrew lock nut and nut.
2. Remove the pan washer.
3. Recover the rubber antivibration mounting.

Do not remove the lock nut and nut (1) if only the coil springs are to be removed.

4. Undo the mounting nut and recover the washer.
- Lower the jack.
5. Remove the springs and shock absorbers.
6. Undo the bolt and recover the rubber bush, pan washer and fork.

Refit the assembly with the vehicle in normal road setting.
After refitting, bleed the brake system (see UN. 22).

Inspection and checking

1. Substitute defective or leaking shock absorbers.
2. Visually inspect the spring for cracks and distortions.
3. Substitute distorted, damaged or aged rubber parts.

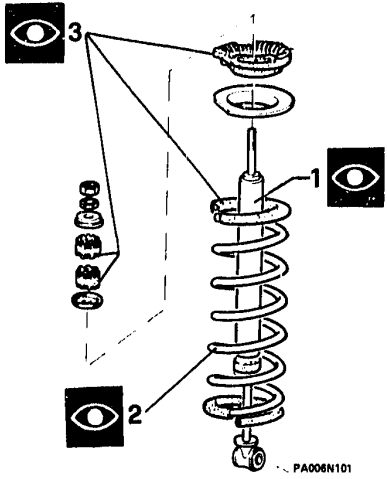

RIGID REAR AXLE
Removal and replacement

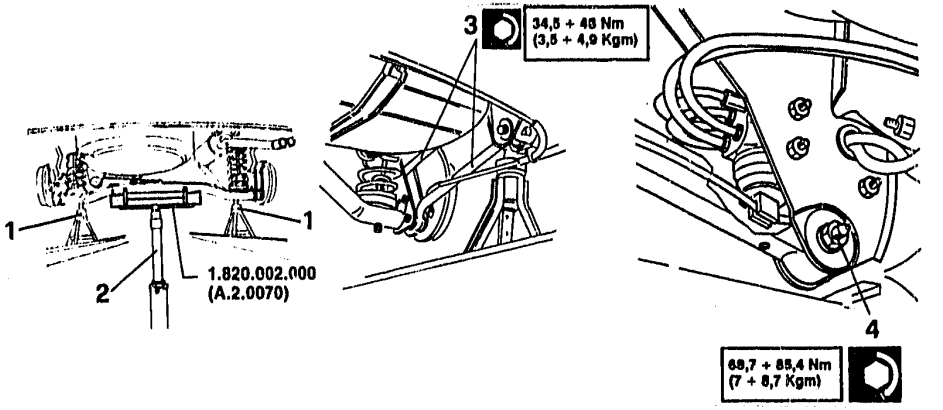

1. Position the vehicle on the hydraulic lift, and support the rear on axle stands under the jacking points.
   - Remove the road wheels.
   - Remove the handbrake cables (see **UN. 22**).
2. Raise the vehicle with a column jack and support No 1.820.002.000 (A.2.0070), and remove the coil springs complete with pan washers and seals
3. Raise the jack and remove the suspensio bolts.
4. Remove the Panhard rod mounting bolt.

Removal and replacement (Continued)

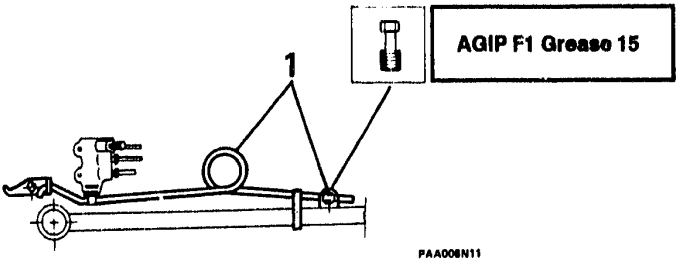

1. Slowly lower the jack, guiding the axle, and withdrawing the brake-corrector spring from the pin on the Panhard rod.

On refitting:

- **arrange the vehicle in nominal suspension setting.**
- **set the braking corrector spring.**
- **bleed the braking system (see UN. 00).**
- **adjust the handbrake lever travel (see UN. 22).**

Removal and replacement (Continued)

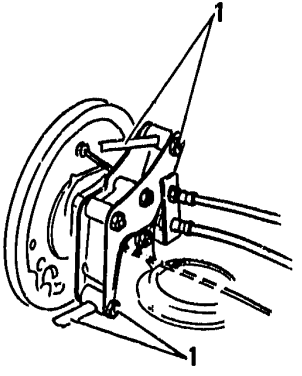

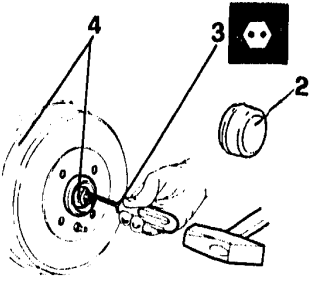

PA006N101

1. Undo the bolts and remove the suspension links.
2. Remove the dust cap from the brake drum.
3. Open up the peening.
4. Remove the nut and brake drum complete with bearings.

Removal and replacement (Continued)

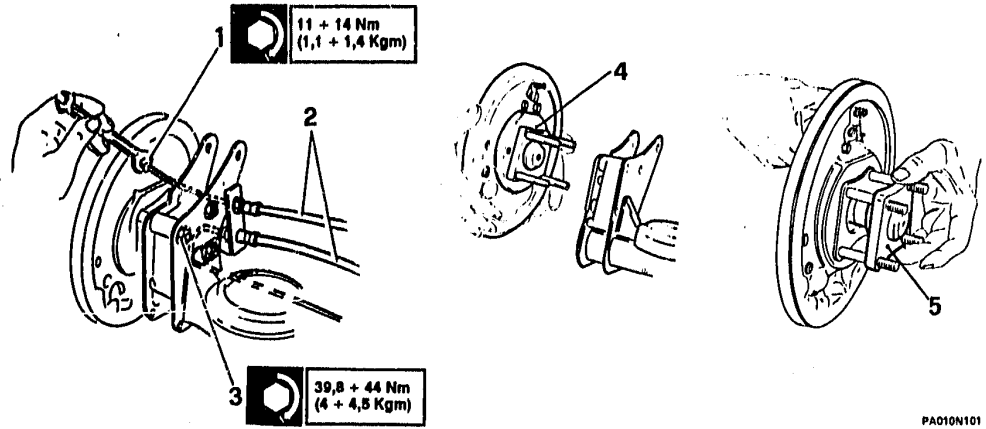

1. Undo the brake pipe union.
2. Remove the rear brake pipes and hoses.
3. Unscrew the stub axle/backplate nuts.
4. Lift out the backing plate complete with stub axle.
5. Separate the stub axle and stud plate from the backing plate.

To refit the hub refer to the section "REAR WHEEL HUB".

Inspection and checking

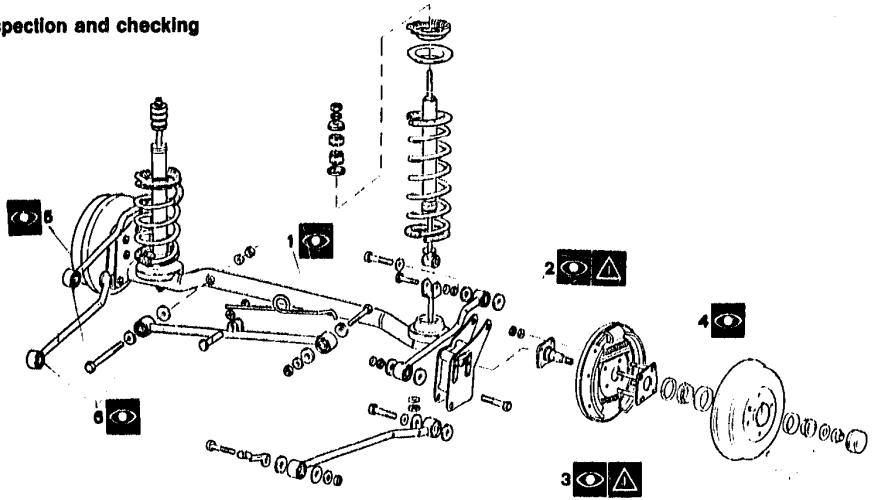

PA011N101

1. Inspect the rear axle for distortion and cracks.
2. Make a more detailed examination of the axle flanges in correspondence to the link and stub axle mounting points.
3. Closely check the condition of the stub axle.
4. Check the condition of the stud plate and stud threads.
5. Check the condition of the suspension links and Panhard rod.
6. Without removing them, check the condition of the suspension link and Panhard rod silent-blocs, and replace them if necessary.

Check the brake pipes for distortion or corrosion, and make sure the hoses are in good condition.

REAR WHEEL ALIGNMENT

- Carry out the following preliminary operations.
  a. Set the vehicle in running order, with fuel tank full and spare wheel fitted.
  b. Check that the tire pressures are correct, as specified (see **UN. 28**).
  c. Place the vehicle on a hydraulic lift.
  d. Load up the vehicle, arranging the weights as shown in the drawing.
  e. Rock the vehicle on its suspension a few times.

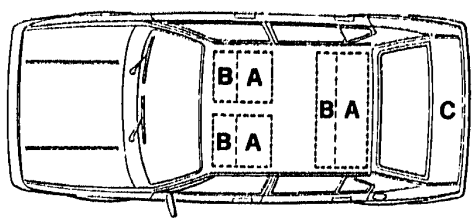

PA012N101

Static load equivalent to three passengers plus baggage Passenger equivalent
A + B = 490 + 245 = 735 N (50 + 25 = 75 kg)
C = 490 N (50 kg)

REAR WHEEL ALIGNMENT (continued)

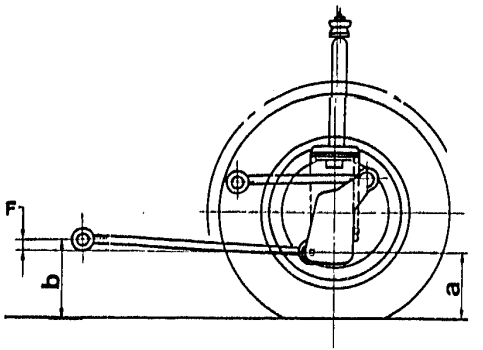

PB013N101

MODELS	F = b - a
4x2 (8 valves, 16 valves)	0 +10 -5
16V	-10 +10 -5
TURBODIESEL	+6 +10 -5
Permanent 4	-2 +10 -5

- Check rear wheel alignent by measuring distance F, the distance between the two parallels (to the floor plane) that pass through points "a" and "b" defined below.

Point a:
Axis of trailing link mounting bolt on wheel hub bracket.

Point b:
Axis of trailing link mounting bolt on body.

Distance F must bemeasured for both LH and RH sides.

REAR WHEEL ALIGNMENT (Continued)

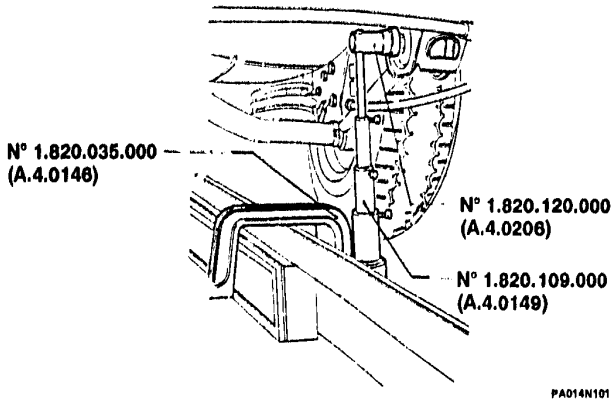

- Measure rear wheel alignment using the tools shown in the drawing.
- When measuring distance "a", set the moving graduated rod of test tool No 1.820.109.000 (A.4.0149) in the fully retracted position; the subsequent measurement of point "b" is then made shifting only the graduated rod.
- Read off the alignment value F directly from the graduated scale on the test tool moving rod.
  If the alues measured are out of specified limits, substitute the coil springs.

REAR WHEEL CAMBER AND TOE-OUT

CAMBER

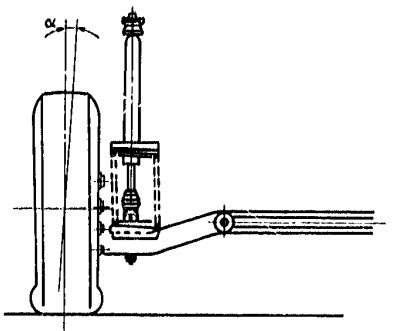

TOE-OUT

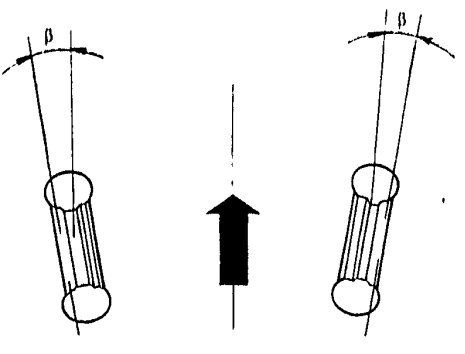

CAMBER ANGLE
$\alpha = 0° \pm 25'$

TOE-OUT ANGLE
$\beta = 0° \pm 25'$

- These camber and toe-out values are approximate, for checking purposes only, and are not adjustable.

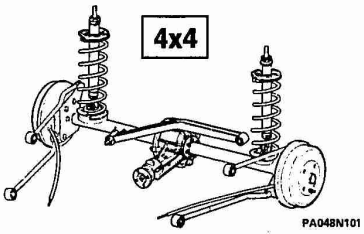

REAR SUSPENSION

REAR WHEEL ALIGNMENT

REAR WHEEL CAMBER AND TOE-OUT

REAR SUSPENSION

ASSEMBLY ..... 25 - 16
DESCRIPTION ..... 25 - 17
REAR DIFFERENTIAL ASSEMBLY ..... 25 - 18
Removal and replacement ..... 25 - 18
Inspection and checking ..... 25 - 22
COIL SPRINGS AND SHOCK-ABSORBERS ..... 25 - 23
Removal and replacement ..... 25 - 23
Inspection and checking ..... 25 - 27

REAR WHEEL ALIGNMENT ..... 25 - 28

REAR WHEEL CAMBER AND TOE-OUT ..... 25 - 31

REAR SUSPENSION

ASSEMBLY

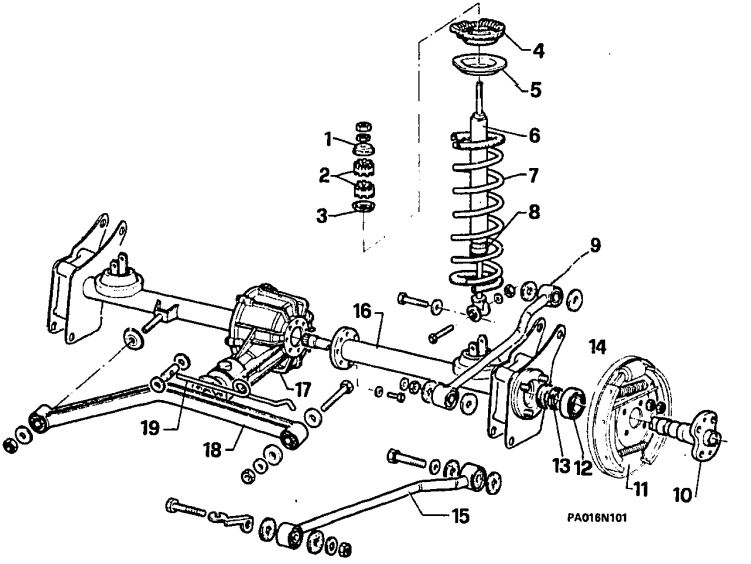

1 Upper cup washer
2 Rubber bushes
3 Lower cup washer
4 Upper gasket
5 Upper pan washer
6 Shock absorber
7 Coil spring
8 Buffer
9 Upper link
10 Half-shaft
11 Brake backing plate
12 Bearing
13 Ring nut
14 Oil seal
15 Lower link
16 Axle
17 Rear differential unit
18 Panhard rod
19 Braking corrector spring

DESCRIPTION

The modifications to the rear suspension involve forward rather than rear mounted upper trailing links.
Road-transmitted noise in the passenger-compartment has thus been reduced to a minimum by anchoring all the struts to a particularly rigid point on the underbody.
From the wheel-geometry standpoint the suspension has barely changed from its predecessor in that wheel centre excursions follow more or less the same trajectory as before.

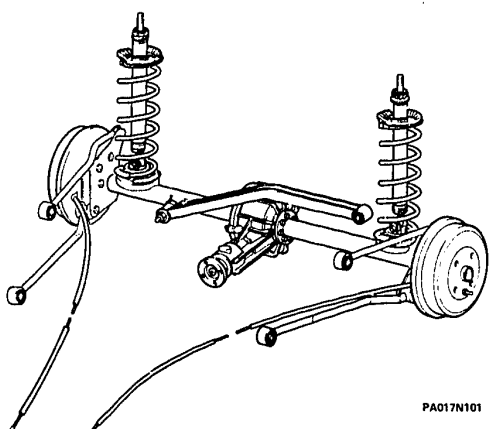

PA017N101

REAR DIFFERENTIAL ASSEMBLY

Removal and replacement

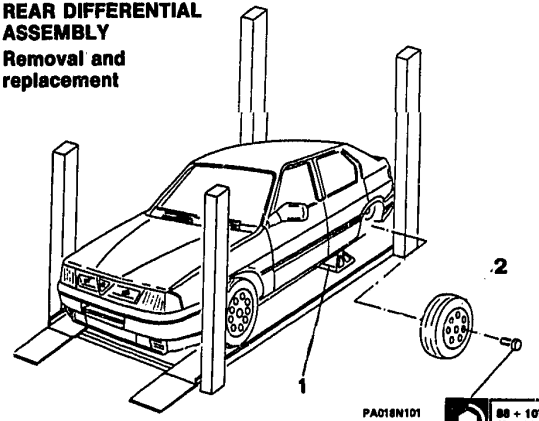

88 ÷ 107,8 Nm (9 ÷ 11 Kgm)

17,6 ÷ 21,5 Nm (1,8 ÷ 2,2 Kgm)

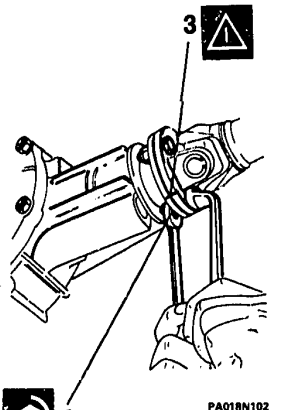

1. Place the vehicle on a hydraulic lift, and support it at the front using axle stands under the jacking points.
2. Remove the road wheels.

- Remove the handbrake cables (see **UN. 22**).

3. Scribe a reference mark on the rear differential union flange for reassembly purposes.
4. Undo the union bolts, and separate the flanges.

When refitting adjust the handbrake travel (see GR. 00).

Support the rear propellor shaft section during the operation.

Removal and replacement (Continued)

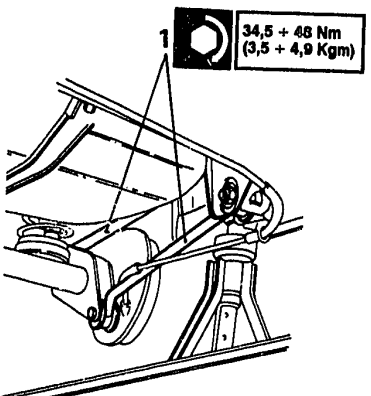

1. Slacken the suspension link bolts from the body.

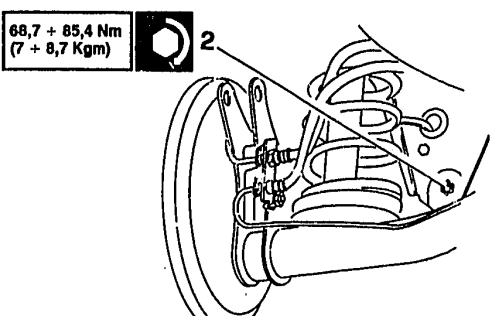

2. Slacken the Panhard rod mounting bolt from the body.

Removal and replacement (Continued)

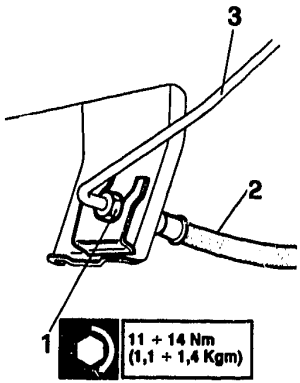

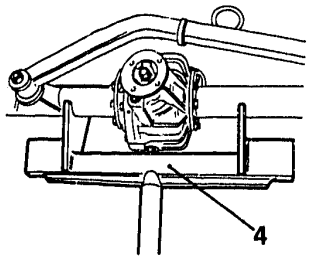

1. Undo the brake pipe union.
2. Withdraw the brake hose from the support bracket.
3. Plug the brake pipe end.
4. Place a column jack fitted with suitable support under the rear differential unit, then lift it to free the shock absorbers from the suspension end stops.

Removal and replacement (Continued)

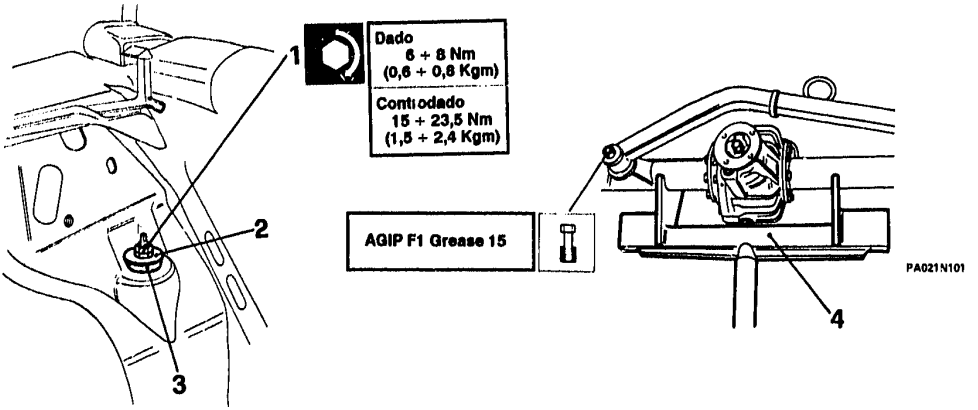

1. Unscrew locknut and nut.
2. Remove the pan-washer.
3. Recover the anti-vibration rubber.
- Remove the trailing link and Panhard rod bolts slackened previously.
4. Lower the column jack and withdraw the braking corrector spring from the pin on the Panhard rod.

When refitting, reset the braking corrector spring (see UN. 22).

- If necessary for the operations to be carried out, remove the springs with pan washers and gaskets, then disconnect the shock absorbers and the front and rear trailing links from the axle tubes.

Refit with the vehicle at normal trim.
After refitting bleed air from the brake system (see GR. 22) and check the differential oil level (see GR. 00).

Inspection and checking

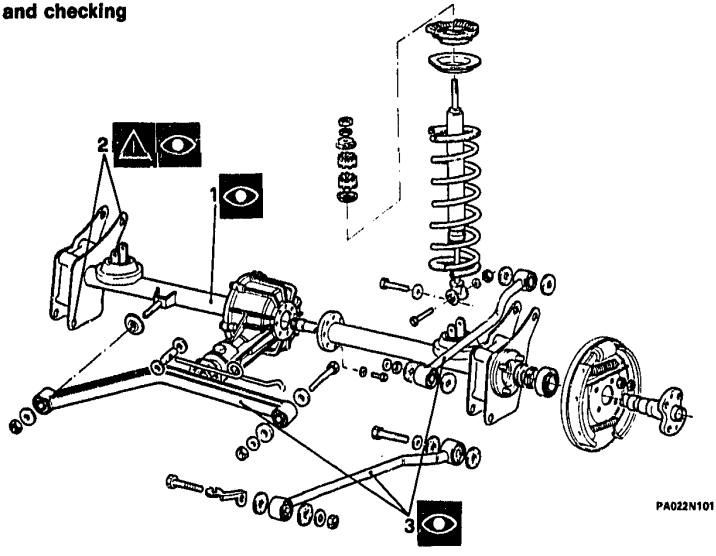

1. Inspect the rear differential for distortion, cracks or dent
s. Make a closer examination of the axle tube flanges in correspondence with the link attachment points.
3. Check the condition of the trailing links and Panhard rod.

- Without removing them, check the condition of the trailing link and Panhard rod silent-blocs, and replace them if necessary.

Inspect the brake pipes for distortion and corrosion, and check the condition of the hoses.

COIL SPRINGS AND SHOCK ABSORBERS
Removal and replacement

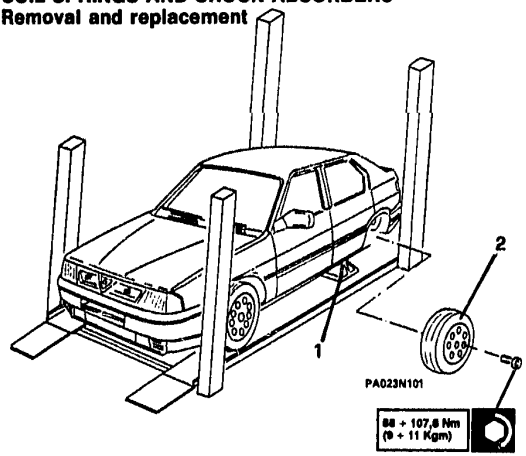

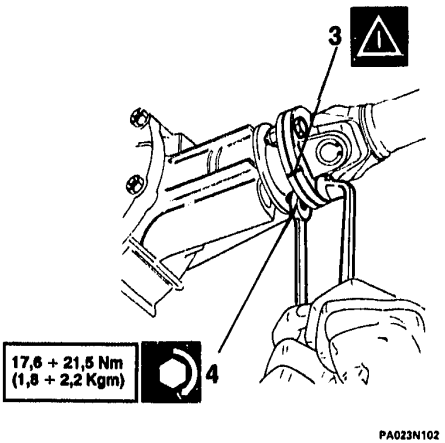

1. Position the vehicle on a hydraulic lift, and support the front with axle stands placed under the jacking points.
2. Remove the road wheels.
- Remove the handbrake cables (see **UN. 22**).

When refitting adjust the handbrake travel (see GR. 00).

3. Scribe a reference mark on the rear differential union flange for reassembly purposes.
4. Remove the union bolts and separate the flanges.

Support the propellor shaft rear section during the operation.

Removal and replacement (Continued)

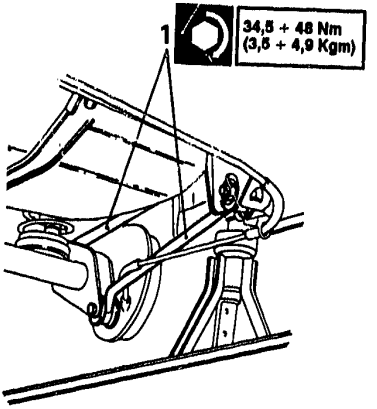

1. Slacken the trailing link bolts from the body.

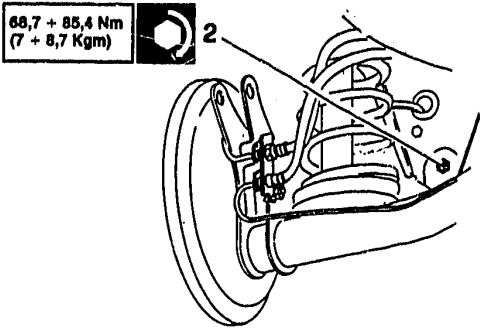

2. Slacken the Panhard rod mounting bolt from the body.

⇩

Removal and replacement (Continued)

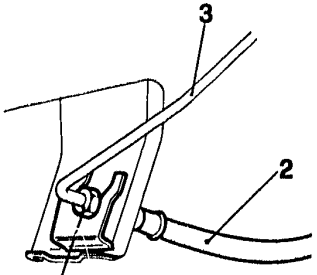

PA026N101

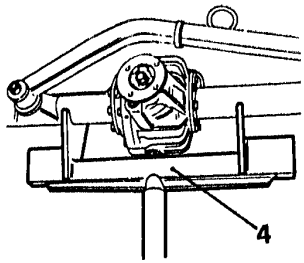

PA026N102

1. Undo the brake pipe union.
2. Withdraw the brake hose from the support bracket.
3. Plug the brake pipe end.
4. Place a column jack fitted with support under the rear differential unit, then lift it so as to free the shock absorbers from the suspension end stops.



Removal and replacement (Continued)

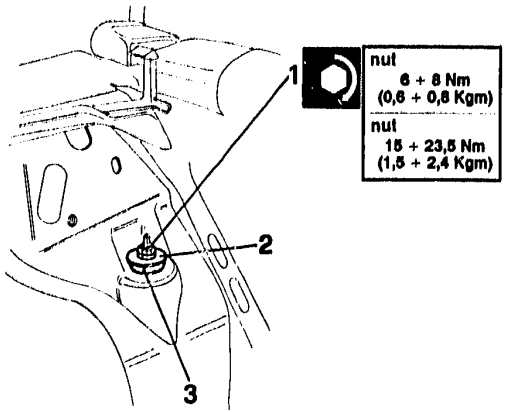

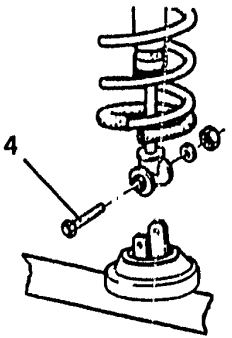

PA026N101

1. Remove locknut and nut.
2. Remove the pan washer.
3. Recover the antivibration rubber.
4. Free and remove the lower shock-absorber mounting bolt from the axle tube, then lower the jack and remove the springs and shock-absorbers from the axle.

- Separate the rubber and pan washer from the shock-absorbers.

Do not remove the locknut and nut (1) if only the coil springs are to be removed

After refitting, bleed the braking system (see UN. 22). and work with the vehicle in nominal alignment.

Inspection and checking

1. Substitute defective or leaking shock-absorbers.
2. Inspect the coil springs for cracks or distortion.
. Substitute distorted, damaged or aged rubber parts.

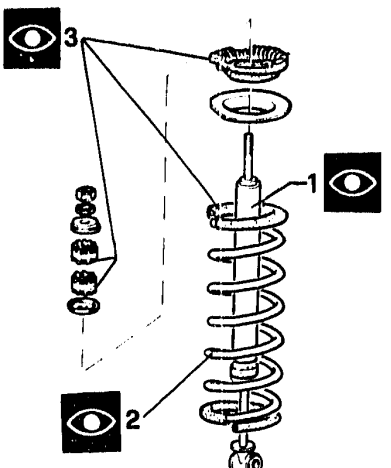

PA006N101

REAR WHEEL ALIGNMENT

- Carry out the following preliminary operations.
a. Set up the vehicle in running order, with full fuel tank and spare wheel aboard.
b. Make sure the tire pressures meet specifications (see UN. 28).
c. Place the vehicle on a hydraulic lift.
d. Load vehicle, arranging the weights as shown.
e. Rock the vehicle on its suspension a few times.

Static load equivalent to three passengers plus baggage Passenger equivalent
A + B = 490 + 245 = 735 N (50 + 25 = 75 kg)
C = 490 N (50 kg)

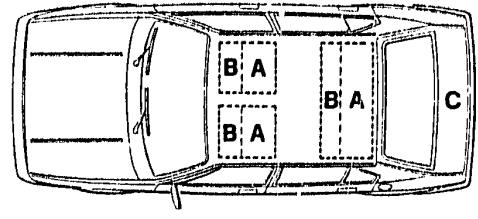

PA012N101

REAR WHEEL ALIGNMENT (Continued)

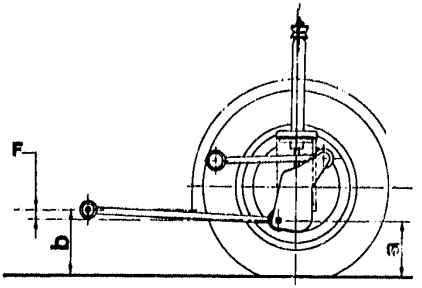

PA029N101

MODELLI	F = b - a
4x4	-2 $^{+10}_{-5}$

- Check rear wheel alignment by measuring F, the distance between the two parallels (to the floor plane) passing through points "a" and "b" defined below.

Distance F must be measured for both LH and RH suspension sides.

Point a:
Axis of suspension link mounting bolt on hub bracket.

Point b:
Axis of suspension link mounting bolt on body.

REAR WHEEL ALIGNMENT (Continued)

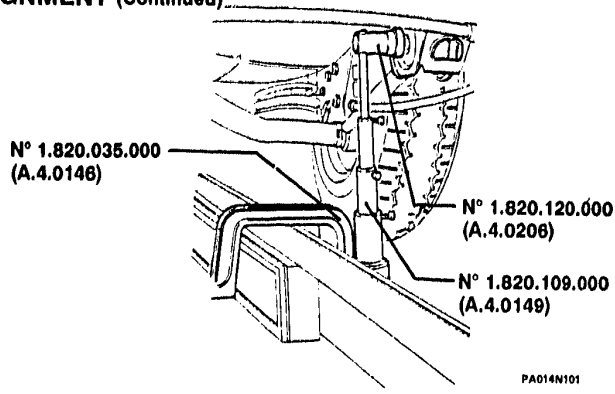

- Measure rear wheel alignments using the tools shown in the figure.
- Measure the distance at point "a" using test tool No 1.820.109.000 (A.4.0149) with its moving graduated rod fully retratcted, then measure the distance at point "b" merely shifting the graduated rod.
- Read the alignment value F directly from the graduated rod on the test tool.
  If alignment values are out of limits, substitute the coil springs.

REAR WHEEL CAMBER AND TOE-OUT

CAMBER

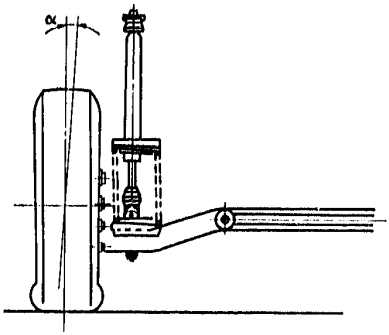

PA018N101

CAMBER ANGLE
α = 0° ± 25'

TOE-OUT

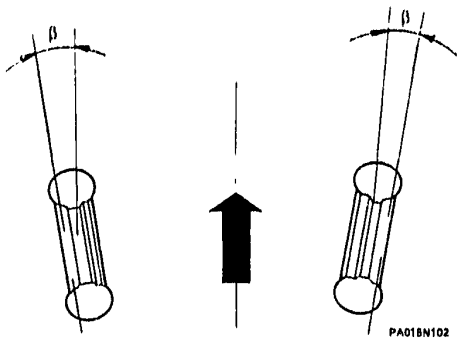

PA018N102

TOE-OUT ANGLE
β = 0° ± 25'

- Camber and toe-out angles are approximate parameters for checking purposes and are not adjustable

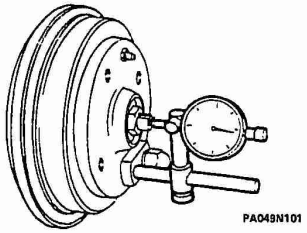

PA049N101

REAR WHEEL HUBS

(Specific for drum brake versions)

REAR WHEEL HUBS

(Specific for A.B.S. disk brake models)

TECHNICAL SPECIFICATIONS AND NOTES

SPECIAL TOOLS

REAR WHEEL HUBS
(Specific for drum brake versions)

ASSEMBLY ..... 25 - 32
REMOVAL ..... 25 - 33
INSPECTION AND CHECKING REPLACEMENT ..... 25 - 35
WHEEL BEARING PRE-LOAD ADJUSTMENT ..... 25 - 38

REAR WHEEL HUBS
(Specific for A.B.S. disk brake models)

REMOVAL AND REPLACEMENT ..... 25 - 39

TSN

FLUIDS AND LUBRICANTS ..... 25 - 42
TIGHTENING TORQUES ..... 25 - 43
COIL SPRINGS ..... 25 - 44
SHOCK ABSORBERS ..... 25 - 45

SPECIAL TOOLS ..... 25 - 46

REAR WHEEL HUBS

(Specific for drum brake versions)

ASSEMBLY

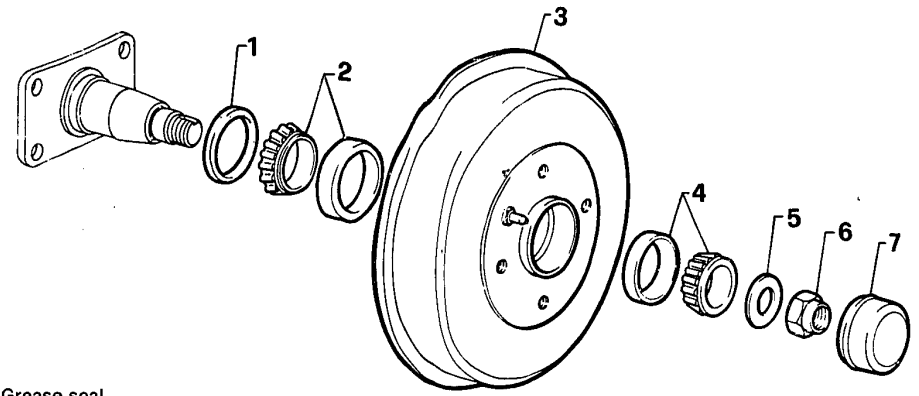

PA032N101

1 Grease seal
2 Inner bearing
3 Drum
4 Outer bearing
5 Washer
6 Nut
7 Dust cap

REMOVAL

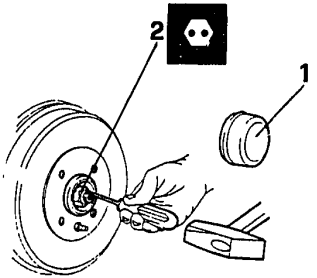

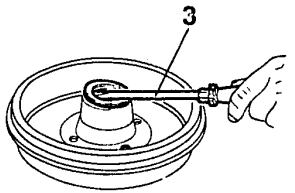

PA033N101

- Choc the front wheels, jack the rear of the vehicle and support it on axle stands.
- Remove the road wheel from the working side.

1. Extract the dust cap from its seat.
2. Open up the peening on the hub nut and remove it.
- Remove the wheel hub complete with brake drum, washer and outer bearing.
3. Working on the bench, and using a screwdiver, extract the grease seal.

The grease seal must not be re-used.

- Pull the inner bearing out of its housing.

REMOVAL (Continued)

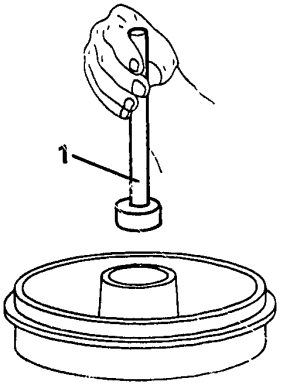

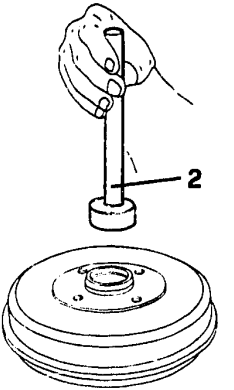

PA034N101

1. Using a suitable drift, extract the inner bearing outer cone from its seating.
2. Using a suitable drift, extract the outer bearing outer cone from its seating.

INSPECTION AND CHECKING, REPLACEMENT

- Carefully clean all parts and dry thom with compressed air.

Make sure that the stub axle is undamaged, and the threads in good condition; if necessary, substitute it
If bearing tracks or rollers are pitted, rough or oval, replace the complete bearing assembly.

If a bearing is found to be defective, both inner and outer bearings must be substituted with new replacements.

1. Using insertion tool N° 1.821.060.000 (A.3.0328), fit the outer bearing outer cone to the hub, driving it fully home into its seating.

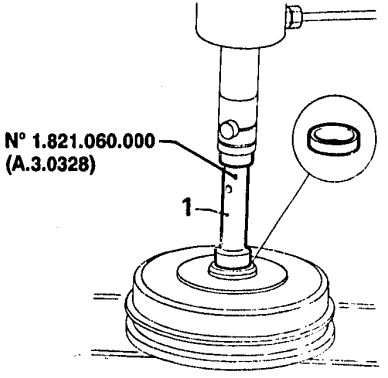

PA035N101

REPLACEMENT (Continued)

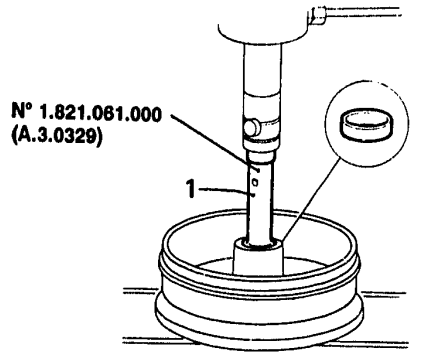

AGIP F1 Grease 33 FD IP Autogrease FD	40 ÷ 55 g.	2

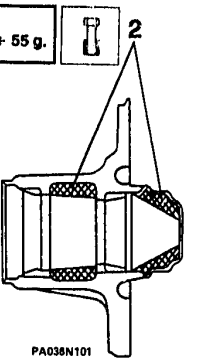

1. Using insertion tool N° 1.821.061.000 (A.3.0329), fit the inner bearing outer cone to the hub, driving it fully home into its seating.
2. Using the specified grease, lubricate the bearing outer cones, and fill the hub chamber with the amount specified.

Make sure the grease does not come into contact with the drum braking surface.

REPLACEMENT (Continued)

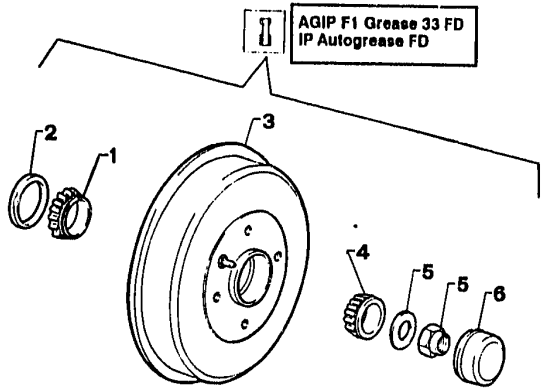

PA037N101

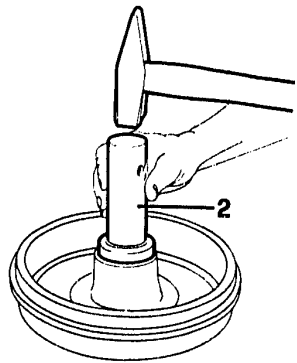

PA037N102

1. Fit the inner bearing into its seat.
2. Using a suitable tool, fit the grease seal.
3. Install the hub on the spindle.
4. Insert the outer bearing.
5. Fit the washer and hub nut.
   - Pre-load the bearings

Peen over the nut.

6. Fit the dust cap.
   - Refit the road wheel.

Make sure that grease does not come into contact with the brake drum.

WHEEL BEARING PRE-LOAD ADJUSTMENT

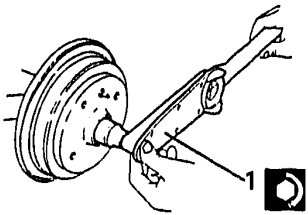

25 ÷ 29 Nm
(2,5 ÷ 3 Kgm)

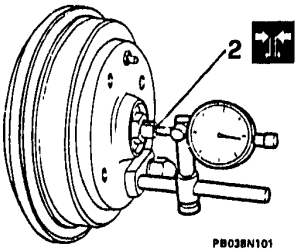

0,01 ÷ 0,05 mm

1. Tighten the nut to the specified torque while rotating the drum 4 or 5 turns in each direction to settle the bearings.

- Partially slacken the nut and strike the stub shaft with a mallet to ensure the outer bearing bears up against the washer and nut.
- Hand tighten the nut to the specified torque:

< 1 Nm
(< 0,1 Kgm)

2. Check end float against the specification.

Peen over the nut carefully to avoid moving it and altering the end float.

Fill the bearing housing with the specified amount of grease

REAR WHEEL HUBS

(Specific for A.B.S. disk brake models)

REMOVAL AND REPLACEMENT

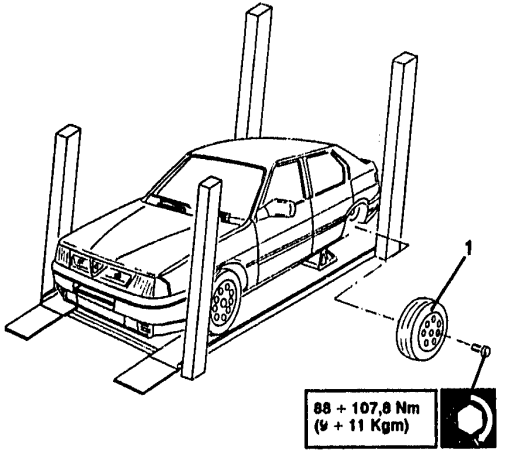

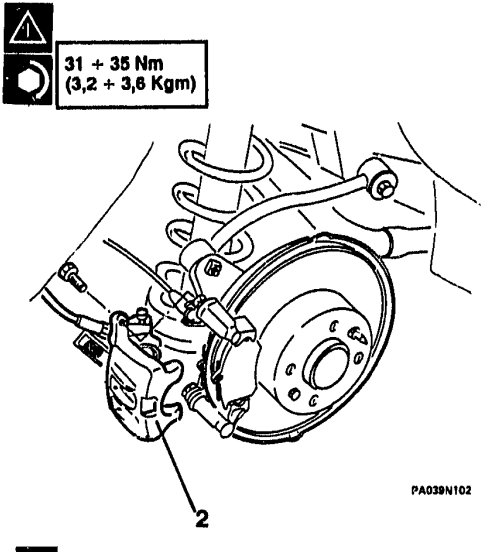

1. Remove the rear road wheel.
2. Remove the mounting bolts and detach the brake caliper.

Fit new bolts when replacing the caliper.

REMOVAL AND REPLACEMENT (Continued)

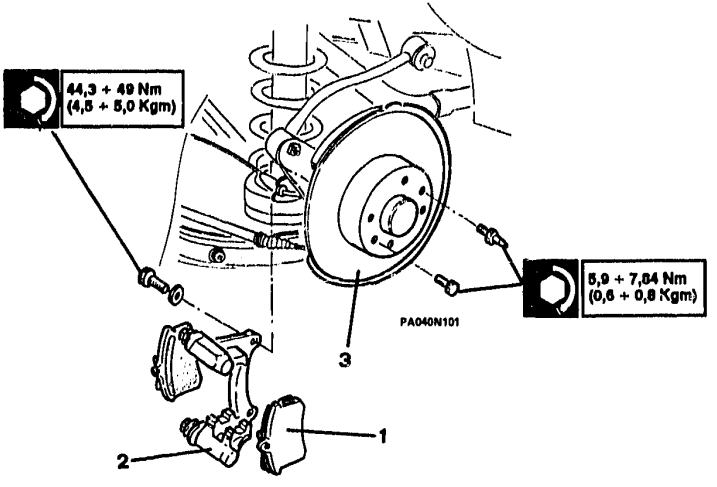

1. Remove the brake pads.
2. Detach the brake caliper bracket.
3. Remove the brake disk.

REMOVAL AND REPLACEMENT (Continued)

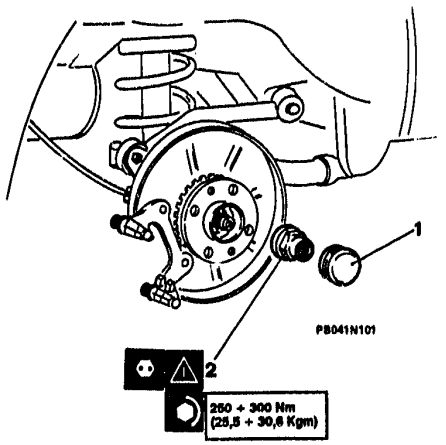

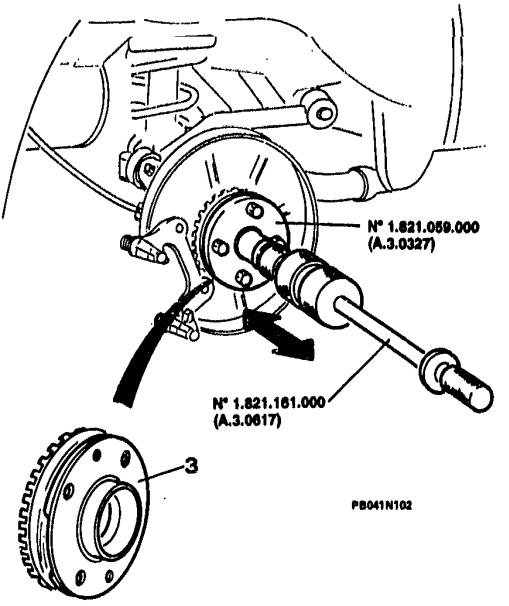

1. Remove wheel hub dust cap.
2. Open up peening and remove hub nut.

When refitting hub, use new nut and peen over.

3. Using tools N° 1.821.059.000 (A.3.0327) and N° 1.821.161.000 (A.3.0617), extract entire hub.

TECHNICAL SPECIFICATIONS AND NOTES

FLUIDS AND LUBRICANTS

APPLICATION	TYPE	PRODUCT	QTY
Wheel hub chamber and dust cap Hub grease seal lip Bearing inner cones and outer tracks Stub shaft bearing seats	GREASE	AGIP F1 Grease 33 FD IP Autogrease FD	40 ÷ 55 g
Inner hole of braking corrector spring bracket on Panhard rod Braking corrector clevis	GREASE	AGIP Grease 15	
Outer surfaces of silent blocs on trailing link (front and back) and Panhard rod ends (on assembly) Outer surface of suspension buffer (when fitting shock-absorbers)	GREASE	UNION CARBIDE CHEMICALS COMPANY: Ucon Lubricant 50 HB-5100 MILLOIL: rubber lubricant	
Wheel hub seal outer surface	OIL	AGIP ROTRA MP SAE 80W/90 IP Pontiax HD 80W/90 TUTELA W90/M-DA	

TIGHTENING TORQUES

UNITS / COMPONENT	N.m	kg.m
Panhard rod mounting bolt	69 ÷ 85	7 ÷ 8,7
Suspension link mounting bolts on hub brackets	29 ÷ 48	3,0 ÷ 4,9
Suspension link mounting bolts on body	34,5 ÷ 48	3,5 ÷ 4,9
Shock absorber fork nuts	20 ÷ 24,5	2 ÷ 2,5
Stub-shaft mounting bolts to axle	39,8 ÷ 44	4 ÷ 4,5
Shock-absorber upper mounting nuts	6 ÷ 8	0,6 ÷ 0,8
Shock-absorber upper locknut	15 ÷ 23,5	1,5 ÷ 2,4
Brake pipe unions	11 ÷ 14	1,1 ÷ 1,4
Shock-absorber/fork mounting bolt	20 ÷ 23,5	2 ÷ 2,4
Panhard rod mounting bolt to body	68,7 ÷ 85,4	7 ÷ 8,7
Panhard rod mounting bolt to differential	59 ÷ 65	6 ÷ 6,6
Propellor shaft union flange bolts	17,6 ÷ 21,5	1,8 ÷ 2,2
Brake caliper mounting bolts	31 ÷ 35	3,2 ÷ 3,6
Brake caliper bracket bolts	44,3 ÷ 49	4,5 ÷ 5
Brake disk bolts	5,9 ÷ 7,84	0,6 ÷ 0,8
Wheel hub nut (disk brakes)	250 ÷ 300	25,5 ÷ 30,6
Bearing pre-load nut (drum brakes)	< 1	< 0,1

COIL SPRINGS

VERSIONS / DATA		33 1.2 1.3 1.4 1.5 1.7	33 1.7 16V 1.7 4x4 1.7 16V 4x4 (permanent) SW 1.3 4x4 1.4 4x4 1.5 4x4 1.7 4x4 1.7 16V 4x4 (permanent)	33 1.8 TD SW 1.3 1.4 1.5 1.7 1.7 16V	33 1.7 16V ie	SW 1.8 TD
Thread diameter	mm	11,1	11,2	11,8	11,2	11,8
Outer diameter of spring	mm	121,5	122,2	122,8	122,2	122,8
Total No. of turns		6,5	6,03	7	6,03	7
Flexibility	mm/kg	0,46	0,424	0,417	0,419	0,417
Free lenght	mm	310	302	313	290	323

SHOCK ABSORBERS

VERSIONS / DATA	4x2 (8 valves and 16 valves)		4x4 (selectable)	16V	4x4 (permanent)	TURBODIESEL	
Type of shock absorbers	HYDRAULIC		HYDRAULIC	HYDRAULIC	HYDRAULIC	HYDRAULIC	
Manufacturer	BOGE	WAY-ASSAUTO	BOGE	BOGE	BOGE	BOGE	WAY-ASSAUTO
Diameter of stem mm	11		11	11	11	11	
Stroke mm	144	143,5	122	103	88,5	144	143,5

SPECIAL TOOLS

1.820.002.000 (A.2.0070)	Rear axle support	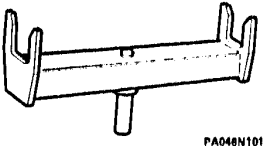 PA046N101
1.820.035.000 (A.4.0146)	Wheel alignment gauge	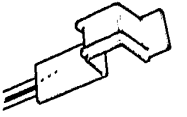 PA046N102
1.820.109.000 (A.4.0149)	Wheel alignment tool	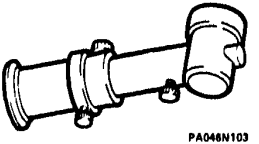 PA046N103
1.820.120.000 (A.4.0206)	Magnetic adapter for wheel alignment check	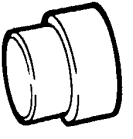 PA046N104

⇩

1.821.059.000 (A.3.0327)	Hub puller	 PA047N102
1.821.060.000 (A.3.0328)	Introduttore pista esterna cuscinetto conico esterno mozzo posteriore	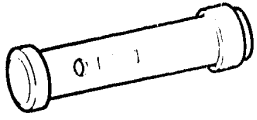 PA047N103
1.821.061.000 (A.3.0329)	Insertion tool for rear wheel hub inner bearing outer cone	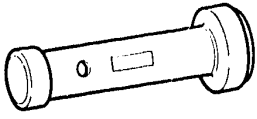 PA047N104
1.821.161.000 (A.3.0617)	Rear wheel hub extraction tool	 PA047N106

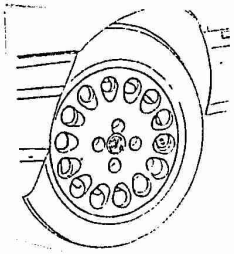

TIRES

TECHNICAL SPECIFICATIONS AND NOTES

TIRES

TIRE WEAR ..... 28 - 1
TIRE ROTATION ..... 28 - 2

TECHNICAL SPECIFICATIONS AND NOTES

FLUIDS AND LUBRICANTS ..... 28 - 3
CHECKS AND ADJUSTMENTS ..... 28 - 3
Dynamic balancing ..... 28 - 3
TIGHTENING TORQUES ..... 28 - 3
CHARACTERISTIC DATA ..... 28 - 4

TIRES

TIRE WEAR

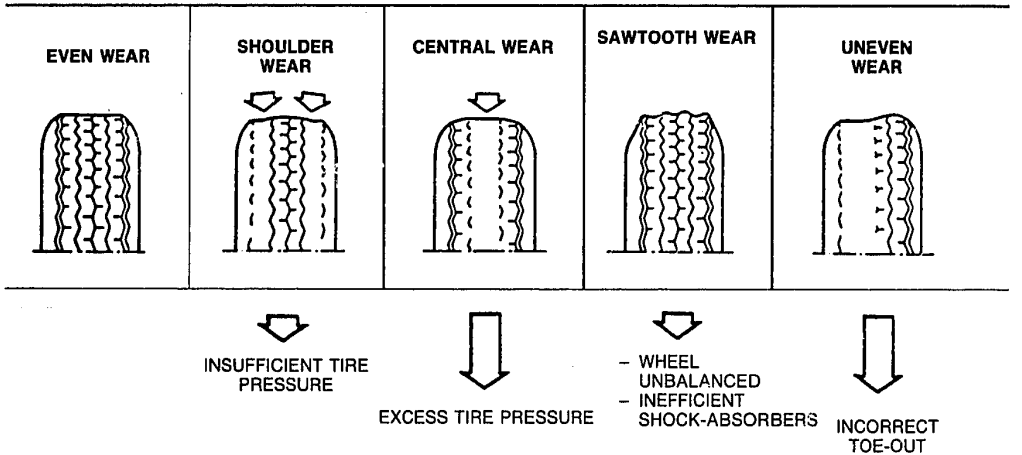

NOTE: TREAD WEAR LIMIT IS REACHED WHEN THE 6 PIPS ON THE CIRCUMFERANCE ARE WORN AWAY)

TIRE ROTATION

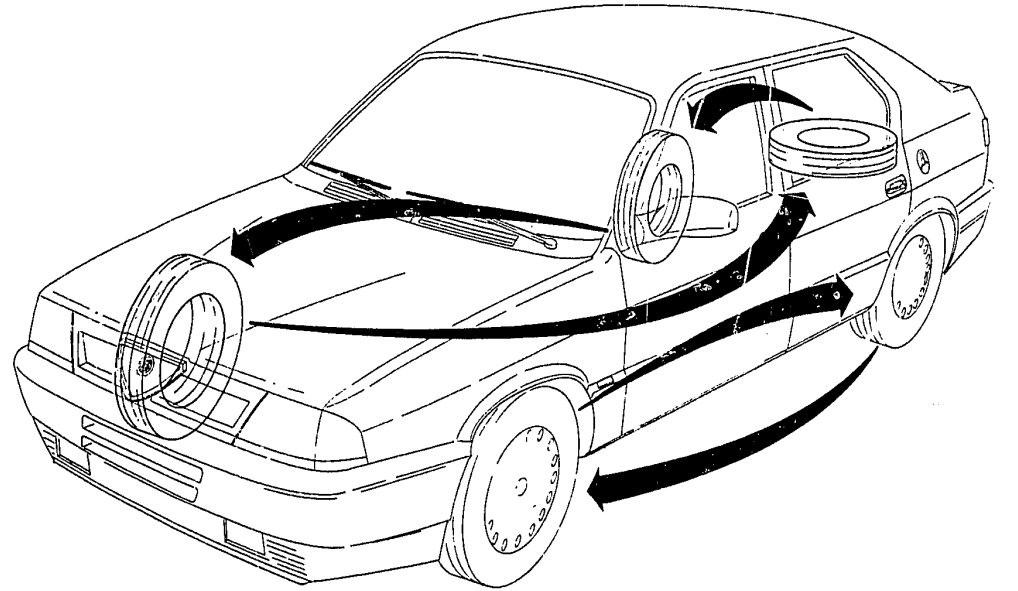

PA002P101

TECHNICAL SPECIFICATIONS AND NOTES

FLUIDS AND LUBRICANTS

APPLICATION	TYPE	PRODUCT
Wheel rims	FLUID	UNION CARBIDE CHEMICALS COMPANY: Ucon Lubricant 50HB - 5100 MILLOIL: Rubber lubricant

CHECKS AND ADJUSTMENTS

Dynamic balancing

Maximum allowable residual unbalance ..... 8 g

Balance weights ..... 10÷40 g (in 10 g steps)

NOTA

- Fit balance weights on inner wheel rim
- Do not fit more than two weights on each side
- Two type of weight are used, for steel or allow wheels respectively. Avoid mixing the different types.
- Balance the wheel and tire every time a puncture is repaired.
- When substituting one or more tires, ensure that the wording DOT lies to the inner part of the vehicle (visible) when fitting the new tires.

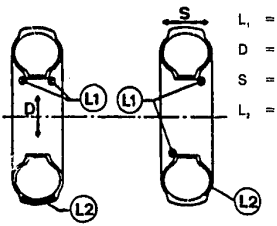

PA003P101

L_1 = balance weight location
D = vibration direction
S = shimmying direction
L_2 = location of heavy area causing lack of balance

⚠ For **Permanent 4** vehicles. When carrying out dynamic wheel balancing with the wheel installed on the vehicle, turn the ignition key to position 1 (key operated services off).

TIGHTENING TORQUES

COMPONENT	N.m	kg.m
Wheel bolts	88 ÷ 107,8	9 ÷ 11

CHARACTERISTIC DATA

TYRES	
Models 1.3 - 1.4 165/70 TR 13 (for 5 1/2 J x 13" rims) **GOOD YEAR** GPS **KLEBER** C2 **MICHELIN** MXL **PIRELLI** P2000 **1.5 IE models** 175/70 TR 13 (for 5 1/2 J x 13" steel rims) **KLEBER** C2T **MICHELIN** MXL **PIRELLI** P2000 **33 1.5 models** **(Optional for alloy rims)** **1.7 IE 8 and 16 valves models** 185/60 HR 14 (for 5 1/2 J x 14" rims) **GOOD YEAR** NCT2 **KLEBER** C50H **MICHELIN** MXV2 **PIRELLI** P4000	**turbodiesel models** 175/70 TR 13 (for 5 1/2 J x 13" rims) **KLEBER** C2T **Compact spare wheel** **(for some versions only)** **Rim** 14" x 4B **Tyre: PIRELLI** 135/80 B14 **FIRESTONE** 135/80 B14

CHARACTERISTIC DATA (continued)

TYRE PRESSURES (measured with cold tyres in kg/cm² - bar)								
	33 1.3 - 1.4 - 1.5 models		33 1.7 IE 8 valves models		33 turbodiesel model		Sport Wagon models	
	front	rear	front	rear	front	rear	front	rear
With reduced load (2 people)	1,8	1,8	2,0	1,8	2,2	1,8	2,2	1,8
Fully loaded	1,8	1,8	2,0	1,8	2,2	1,8	2,2	2,2
Compact spare wheel (for some versions only): 2,8 kg/cm² - bar								
Warning - If travelling for long periods at maximum speed the tyre pressures must be increased by 0.3 kg/cm² (bar)								

MICROFICHE INDEX

Microfiche 1 1/15 Groups: 40-43



Group 40 - Electrical system

RULES AND PRECAUTIONS, FUSES.....40 - A
FUSES (Continued).....40 - B
FUSES (Continued).....40 - C
RELAYS AND FLASHER UNITS, FUSE AND RELAY BOX.....40 - D
EXTERNAL LIGHTING SYSTEM.....40 - E
EXTERNAL LIGHTING SYSTEM (Continued), INTERNAL LIGHTING SYSTEM.....40 - F
SENSORS AND SENDERS.....40 - G
SENSORS AND SENDERS (Continued).....40 - H
SENSORS AND SENDERS (Continued).....40 - I
WINDSCREEN WASHER-WIPERS AND HEADLIGHT WASHERS, REAR WINDSCREEN WASHER/WIPER, ELECTRICAL ACCESSORIES.....40 - L
ELECTRICAL ACCESSORIES (Continued), SWITCHES.....40 - M



Group 43 - Cluster and electronic instruments

RULES AND PRECAUTIONS, INSTRUMENT PANEL.....43 - N
CONTROL UNITS.....43 - O

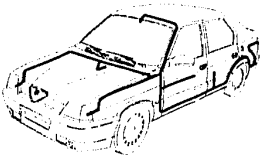

- RULES AND PRECAUTIONS
- FUSES

RULES AND PRECAUTIONS ..... 40 - 1

FUSES

LOCATION AND ACCESS IN ENGINE COMPARTMENT ..... 40 - 2
Specific for engines with two carburettors ..... 40 - 2
Specific for engine with IAW electronic injection ..... 40 - 3
Specific for engines with LE3-JETRONIC electronic injection ..... 40 - 4
Specific for engines with MOTRONIC MP3.1 electronic injection ..... 40 - 5
Specific for engine with MOTRONIC ML4.1 electronic injection ..... 40 - 6
Specific for turbodiesel engine ..... 40 - 7

LOCATION AND ACCESS IN PASSENGER COMPARTMENT ..... 40 - 9
Fuse for power windows ..... 40 - 9
Fuse for electric heater/air conditioner (post-modification) 40-10
Fuse and relay box 40-11

RULES AND PRECAUTIONS

- Before undertaking work, ensure that the ignition key is in the "garage" position, that the negative cable of the battery has been disconnected, and:
  - avoid connecting the output of the control unit directly to the power supply
  - avoid working on the device when the wires are connected to "positive" or "earth" without having previously disconnected the control unit
  - avoid short-circuiting the sensors of the system unless otherwise specified.

  N.B. Always anticipate the possible outcome of any work carried out and avoid operations on parts when the characteristics of the components are not known.
- When reassembling and/or refitting, reverse the procedures given for disassembly and/or removal operations (unless otherwise instructed) and reconnect the battery.

FUSES

LOCATION AND ACCESS IN ENGINE COMPARTMENT

(Specific for engines with two carburettors)

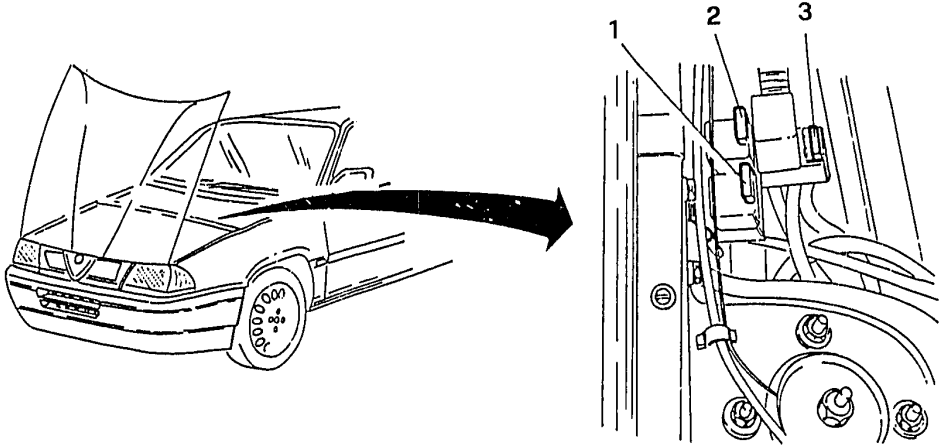

1. Fuse for front foglamp (30A)
2. Fuse for four-wheel drive (30A) (for 4x4 versions)
3. Fuse for headlight washer timer (20A)

LOCATION AND ACCESS IN ENGINE COMPARTMENT
(Specific for engine with IAW electronic injection)

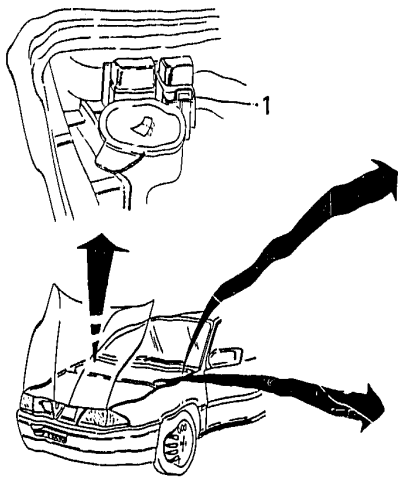

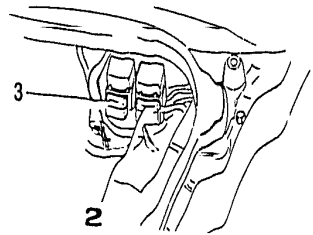

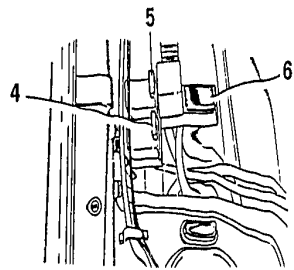

1. Fuse for electronic injection system (20A)
2. Fuse for compressor electromagnetic coupling and electric fan for left-hand condenser (25A)
3. Electric fan fuse for right-hand condenser (20A)
4. Fuse for front foglamp (30A)
5. Fuse for four-wheel drive (30A) (for 4x4 versions)
6. Fuse for headlight washer timer (20A)

LOCATION AND ACCESS IN ENGINE COMPARTMENT
(Specific for engines with LE3-JETRONIC electronic injection)

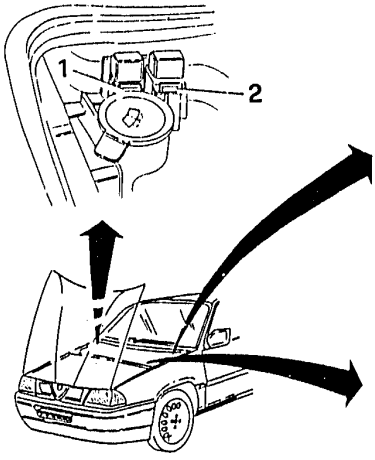

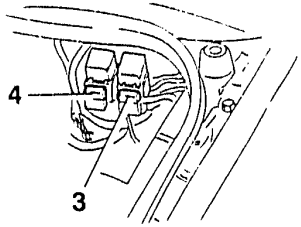

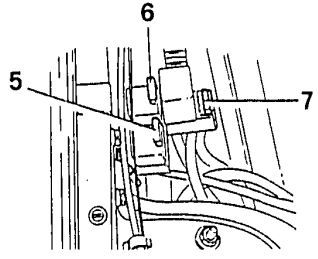

1. Fuse for fuel delivery pump (15A)
2. Fuse for lambda probe (7,5A)
3. Fuse for compressor electromagnetic coupling and electric fan for left-hand condenser (25A)
4. Electric fan fuse for right-hand condenser (20A)
5. Fuse for front foglamp (30A)
6. Fuse for four-wheel drive (30A) (for 4x4 versions)
7. Fuse for headlight washer timer (20A) and DAY LIGHT insertion relay (where applicable)

LOCATION AND ACCESS IN ENGINE COMPARTMENT
(Specific for engines with MOTRONIC MP3.1 electronic injection)

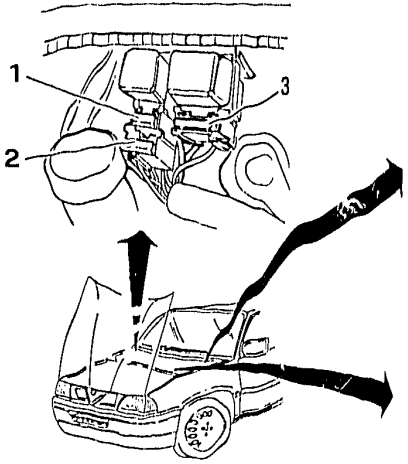

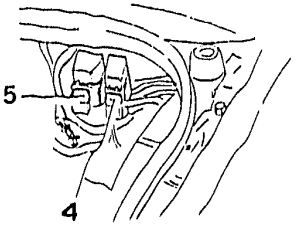

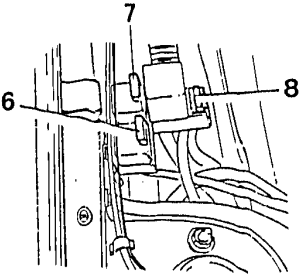

1. Fuse for lambda probe (8A).
2. Fuse for fuel pump (15A).
3. Fuse for Motronic power supply (8A)
4. Fuse for compressor electromagnetic coupling and electric fan for left-hand condenser (25A)
5. Fuse for electric fan for right-hand condenser (20A)
6. Fuse for front foglight (30A)
7. Fuse for four-wheel drive control unit (30A) (specific for 4x4 versions)
8. Fuse for headlight washer timer (20A) and DAY LIGHT engagement relay (where applicable)

LOCATION AND ACCESS IN ENGINE COMPARTMENT

(Specific for engine with MOTRONIC ML4.1 electronic injection)

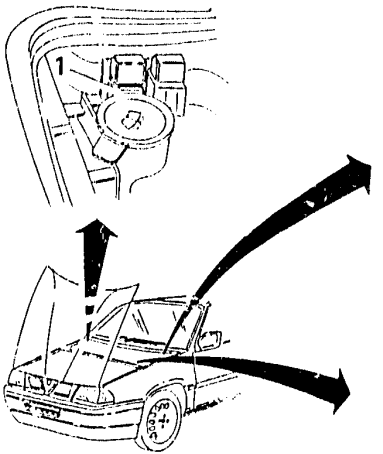

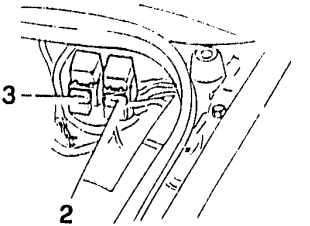

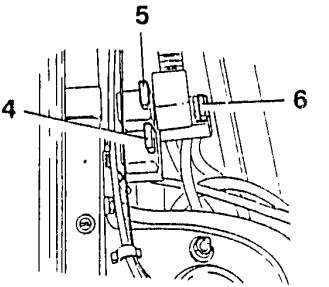

1. Fuse for fuel delivery pump (15A)
2. Fuse for compressor electromagnetic coupling and electric fan for left-hand condenser (25A)
3. Electric fan fuse for right-hand condenser (20A)
4. Fuse for front foglamp (30A)
5. Fuse for four-wheel drive (30A) (for 4x4 versions)
6. Fuse for headlight washer timer (20A) and DAY LIGHT insertion relay (where applicable)

LOCATION AND ACCESS IN ENGINE COMPARTMENT
(Specific for turbodiesel engine)

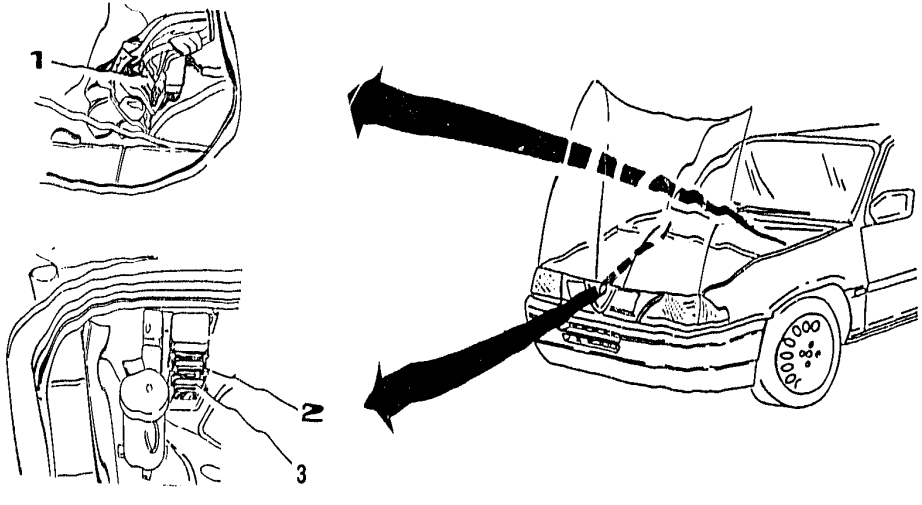

1. Fuse for glow plug timer (50A)
2. Fuse for supplementary engine cooling fan. (20A)
3. Fuse for engine cooling fan relay. (25A)

LOCATION AND ACCESS IN ENGINE COMPARTMENT

(Specific for turbodiesel engine) (continued)

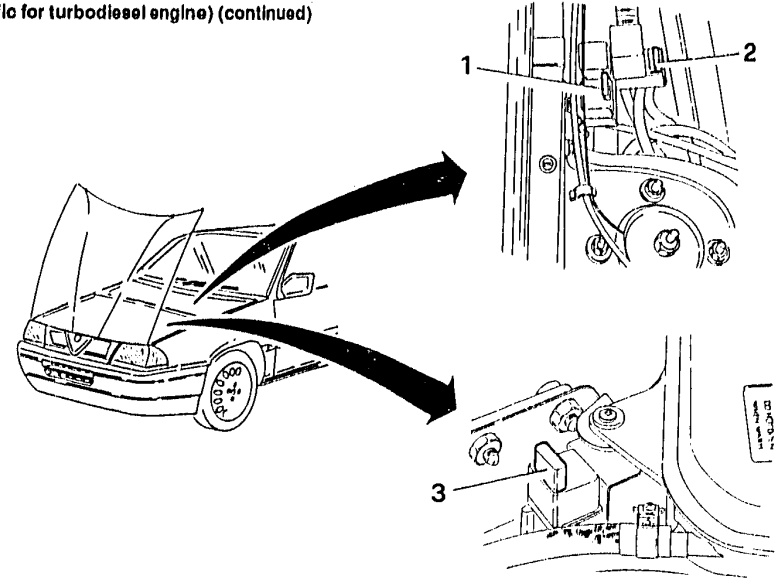

1. Fuse for front foglamp (30A)
2. Fuse for headlight washer timer (20A)
3. Fuse for fuel preheating device (30A)

FUSES (continued)

LOCATION AND ACCESS IN PASSENGER COMPARTMENT

Fuse for power windows

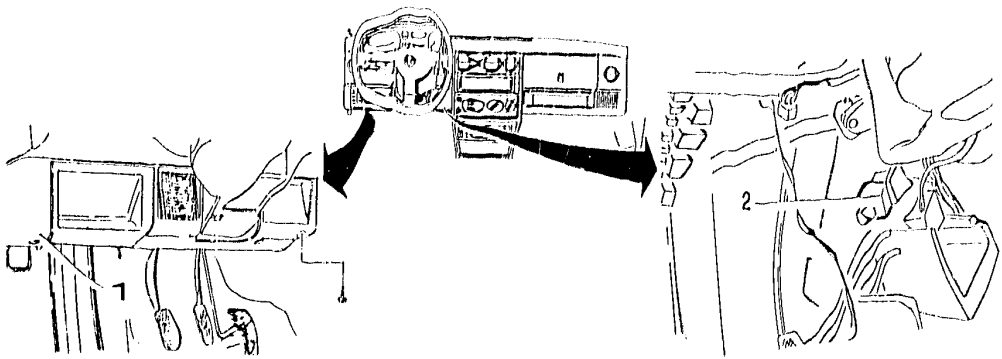

1. Remove the left-hand trim from under the dashboard (see GROUP 66).

2. The 30A power window fuse located behind the trimming panel can now be reached.

LOCATION AND ACCESS IN PASSENGER COMPARTMENT (continued)
Fuse for electric heater/air conditioner (post-modification)

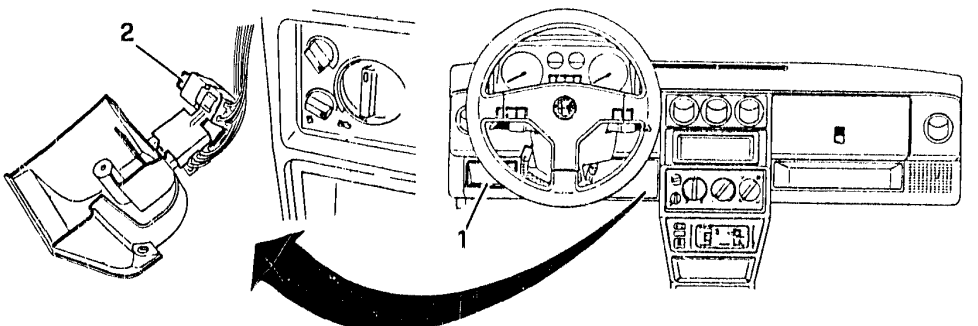

1. Remove the left-hand trim from under the dashboard (see **GROUP 66**).
2. Gain access to the electric heater/air conditioner fuse on the back of the removed trim (30A).

LOCATION AND ACCESS IN PASSENGER COMPARTMENT (continued)
Fuse and relay box

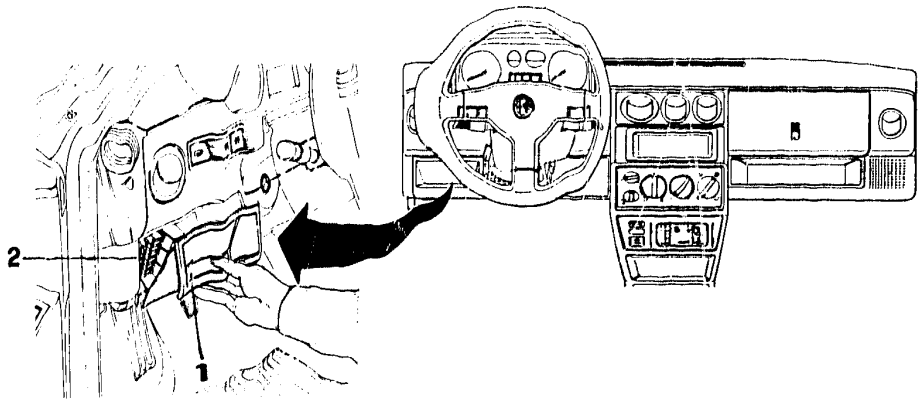

1. Remove the pressure fitted compartment.

2. Gain access to the fuse/relay box.

LOCATION AND ACCESS IN PASSENGER COMPARTMENT

Fuse and relay box (continued)

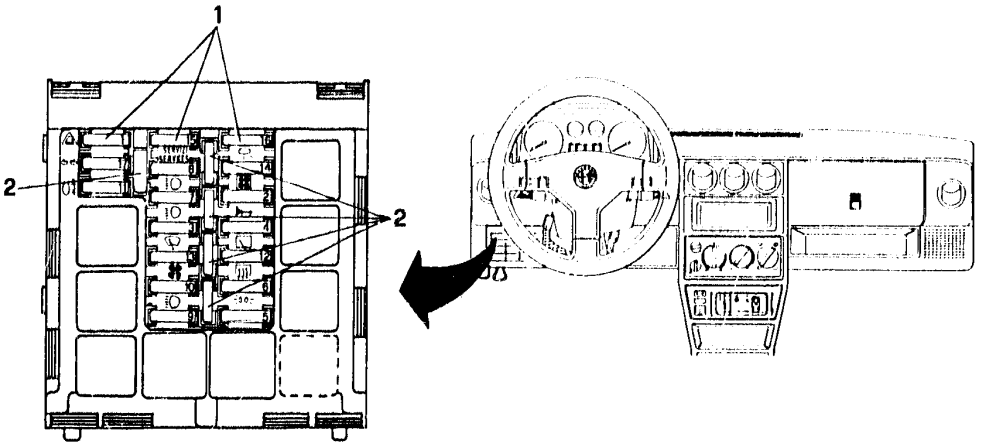

1. Service fuses.
2. Spare fuses.

NOTE: To replace the fuse, pull it out from its housing and insert another with identical characteristics.

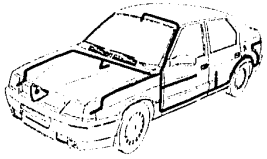

- FUSES (continued)

FUSES

FUSEBOX TABLE
(excluding MAQUILLAGE '92 models) 40-13

FUSES (continued)

FUSEBOX TABLE (excluding MAQUILLAGE '92 models)

FUSE		SERVICE PROTECTED	Amps (A)	33 1.3 V 33 1.3 VL 33 1.5 S.W. S.W. 1.3 L	S.W. 4x4	33 (1.3 IE - 1.3 IEL) 33 (1.4 IE - 1.5 IE) S.W. 1.3 IE S.W. 1.3 IEL S.W. 1.5 IE
Symbol	N.					
	1	Hazard warning lights	10	X	X	X
	2	Horns - Cigar lighter - Car radio - Brake lights Fusebox lighting (pre-modification)	20	X	X	X
	3	Windscreen wiper - Electric pump for windscreen washer	20	X	X	X
		Timer for headlight washer		O (#)	O	O (#)
		Rear windscreen wiper - Electric pump for rear windscreen washer		– (*) (/)	X	– (*)(/)
	4	+ 15 Clock - Reversing light	20	X	X	X
		Rear windscreen wiper reset		– (*)(/)	X	– (*)(/)
		+ 15 DIM DIP "ON" relay (where applicable) – Dipped-beam headlights dimmer (where applicable)		X (//)	–	X (@)
		+ 15 DAY LIGHT relays (where applicable) - Heated seats (where applicable)		–	–	X (@)

(X): standard (-): not applicable (O): optional (#): not applicable for 33 1.3 V - 33 1.3 IE - S.W. 1.3 IE (*): optional for S.W. - S.W. 1.3 IE
(/) : standard for S.W. 1.3 L - S.W. 1.3 IEL (//): only for 33 1.3 V (@): only for 33 1.5 IE

FUSEBOX TABLE (excluding MAQUILLAGE '92 models)

FUSE		SERVICE PROTECTED	Amps (A)	S.W. 1.3 IE 4x4 S.W. 1.5 IE 4x4	33 1.7 IE 33 16V S.W. 1.7 IE S.W. 16V	33 S 1.7 IE 33 S 16V
Symbol	N.					
	1	Hazard warning lights	10	X	X	X
	2	Horns - Cigar lighter (excluding Australian version) Car radio - Brake lights - Fusebox lighting (pre-modification)	20	X	X	X
	3	Windscreen wiper - Electric pump for windscreen washers Rear windscreen wiper - Electric pump for rear windscreen washer	20	X	X	X
		Timer for headlight washer		O	O	O
	4	+ 15 Clock - Reversing light - Rear windscreen wiper reset	20	X	X	X
		+ 15 DIM DIP "ON" relay (where applicable) - Dimmer for dipped-beam headlights (where applicable)		–	X (#)	X (/)
		+ 15 DAY-LIGHT relays (where applicable) - Heated seats (where applicable)		X (*)	X	X
		Cigar lighter (specific for Australian version)		–	–	X (/)

(X): standard (–): not applicable (O): optional (*): excluding S.W. 1.3 IE 4x4 (#): excluding S.W. 1.7 IE (/): excluding 33 S 1.7 IE

FUSEBOX TABLE (excluding MAQUILLAGE '92 models)

FUSE		SERVICE PROTECTED	Amps (A)	33 1.7 IE 4x4 S.W. 1.7 IE 4x4	33 S 16V Permanent 4	33 TD Intercooler S.W. TD Intercooler
Symbol	N.					
	1	Hazard warning lights	10	X	X	X
	2	Horns - Cigar lighter (excluding Australian versions) Car radio - Brake lights - Fusebox lighting (pre-modification)	20	X	X	X
	3	Windscreen wiper - Electric pump for windscreen washer - Rear windscreen wiper - Electric pump for rear windscreen washer	20	X	X	X
		Timer for headlight washer		O	O	O
	4	+15 Clock - Reversing light - Rear windscreen wiper reset	20	X	X	X
		Turbo pressure warning light (pre-modification) - +15 Relay for supplementary engine cooling fan (pre-modification) - +15 Relay for fuel pre-heating device +15 Timer for fuel preheating device		-	-	X
		+15 DIMDIP'ON" relay (where applicable) - Dipped-beam headlights dimmer (where applicable)		-	X	-
		DAY-LIGHT relays (where applicable) - Heated seats (where applicable)		X	X	-
		Cigar lighter (specific for Australian version)		-	X	-

(X): standard (-): not applicable (O): optional

⇩

FUSEBOX TABLE (excluding MAQUILLAGE '92 models)

FUSE		SERVICE PROTECTED	Amps (A)	33 1.3 V 33 1.3 VL 33 1.5 S.W. S.W. 1.3 L	S.W. 4x4	33 (1.3 IE - 1.3 IEL) 33 (1.4 IE - 1.5 IE) S.W. 1.3 IE S.W. 1.3 IE L S.W. 1.5 IE
Symbol	N.					
	5	Front-right and rear-left sidelights - Sidelights warning light - Numberplate lights - Front foglights permit - Lighting for heating/ventilation controls - Lighting for cigar lighter and ashtray - Glovebox light - Lighting for instrument panel - Clock lighting - Permit for "lights on" signal	10	X	X	X
		Headlight corrector		O	O	O
		DIM DIP "on and off" relays (where applicable)		X (*)	-	X (#)
	6	Front-left and rear-right sidelights - Boot light (excluding S.W. models)	10	X	X	X
		Permit for headlight washers		O (/)	O	O (/)

(X): standard (-): not applicable (O): optional (*): only for 33 1.3 V (#) only for 33 1.5 IE
(/): not applicable for 33 1.3 V - 33 1.3 IE - S.W. 1.3 IE

FUSE BOX TABLE (excluding MAQUILLAGE '92 models)

FUSE		SERVICE PROTECTED	Amps (A)	S.W. 1.3 IE 4x4 S.W. 1.5 IE 4x4	33 1.7 IE 33 16V S.W. 1.7 IE S.W. 16V	33 S 1.7 IE 33 S 16V (*)
Symbol	N.					
	5	Alfa Control (Front-right and rear-left sidelights)	10	–	X	–
		Front-left and rear-right sidelights		X	–	X
		Sidelights warning light - Numberplate lights - Front foglights permit - Lighting for heating/ventilation controls - Lighting for cigar lighter and ashtray - Glovebox light - Lighting for instrument panel - Clock lighting - Permit lights "on" warning control unit		X	X	X
		Headlight corrector		O	O	O
		DIM DIP "on and off" relays (where applicable)		–	–	X (#)
		Dimmer for instrument lighting (where applicable)		–	–	X (#)
	6	Alfa Control (Front-left and rear-right sidelights) - Lighting for Alfa Control	10	–	X	–
		Front-right and rear-left sidelights		X	–	X
		Permit for headlight washers		O	O	O
		Boot light (excluding S.W. models)		–	X	X
		DIM DIP "on and off" relays (where applicable)		–	X (*)	–

(X): standard (–) : not applicable (O): optional (*): excluding S.W. 1.7 IE (#): excluding 33 S 1.7 IE

FUSEBOX TABLE (excluding MAQUILLAGE '94 models)

FUSE		SERVICE PROTECTED	Amps (A)	33 1.7 IE 4x4 S.W. 1.7 IE 4x4	33 S 16V ⚷ Permanent 4	33 TD Intercooler S.W. TD Intercooler
Symool	N.					
	5	Alfa Control (Front-right and rear-left sidelights)	10	X	-	-
		Front- left and rear-right sidelights		-	X	X
		Sidelights warning light - Numberplate lights - Front foglights permit - Lighting for heating/ventilation controls - Lighting for cigar lighter and ashtray - Glovebox light - Lighting for instrument panel - Clock lighting - Permit for lights "on" warning control unit		X	X	X
		Headlight corrector		O	O	O
		DIM DIP "on and off" relays (where applicable)		-	X	-
		Dimmer for instrument lighting (where applicable)		-	X	-
	6	Alfa Control (Front-left and rear-right sidelights) - Lighting for Alfa Control	10	X	-	-
		Front-right and rear-left sidelights		-	X	X
		Permit for headlight washers		O	O	O
		Boot light (excluding S.W. models)		X	X	X

(X): standard (-): not applicable (O): optional

FUSEBOX TABLE (excluding MAQUILLAGE '92 models)

FUSE		SERVICE PROTECTED	Amps (A)	33 1.3 V 33 1.3 VL 33 1.5 S.W. S.W. 1.3 L	S.W. 4x4	33 (1.3 IE - 1.3 IEL) 33 (1.4 IE - 1.5 IE) S.W. 1.3 IE S.W. 1.3 IEL S.W. 1.5 IE
Symbol	N.					
	7	Right-hand dipped beam headlight	10	X	X	X
	8	Left-hand dipped beam headlight	10	X	X	X
	9	Right-hand main beam headlight	10	X	X	X
	10	Left-hand main beam headlight - Headlight warning light	10	X	X	X
	11	Rear fog light	7,5	X	X	X
	12	Heated rear windscreen	20	X	X	X
	13	Electric heater/air conditioner (pre-modification)	30	X/-	X/O	X/O
		+15 Relay for electric heater/air conditioner (post-modification)	7,5	X/-	X/O	X/O
	14	Engine cooling fan	25	X	X	X

(X): standard (-): not applicable (O): optional

FUSEBOX TABLE (excluding MAQUILLAGE '92 models)

FUSE		SERVICE PROTECTED	Amps (A)	S.W. 1.3 IE 4x4 S.W. 1.5 IE 4x4	33 1.7 IE 33 16V S.W. 1.7 IE S.W. 16V	33 S 1.7 IE 33 S 16V
Symbol	N.					
	7	Right-hand dipped beam headlight	10	X	X	X
	8	Left-hand dipped-beam headlight	10	X	X	X
	9	Right-hand main-beam headlight	10	X	X	X
	10	Left-hand main-beam headlight - Headlight warning light	10	X	X	X
	11	Rear foglight	7,5	X	X	X
	12	Heated rear windscreen	20	X	X	X
	13	Electric heater/air conditioner (pre-modification)	30	X/O	X/O	X/O
		+ 15 Relay for electric heater/air conditioner (post-modification)	7,5	X/O	X/O	X/O
	14	Engine cooling fan	25	X	X	X

(X): standard (O): optional

FUSEBOX TABLE (excluding MAQUILLAGE '92 models)

FUSE Symbol	FUSE N.	SERVICE PROTECTED	Amps (A)	33 1.7 IE 4x4 S.W. 1.7 IE 4x4	33 S 16V 4x4 Permanent 4	33 TD Intercooler S.W. TD Intercooler
	7	Right-hand dipped beam headlight	10	X	X	X
	8	Left-hand dipped beam headlight	10	X	X	X
	9	Right-hand main-beam headlight	10	X	X	X
	10	Left-hand main-beam headlight - Headlight warning light	10	X	X	X
	11	Rear fog light	7,5	X	X	X
	12	Heated rear window	20	X	X	X
	13	Electric cooler/air conditioner (pre-modification)	30	X/O	X/O	X/O
		+ 15 Relay for electric heater/air conditioner (post-modification)	7,5	X/O	X/O	X/O
	14	Engine cooling fan	25	X	X	-
		Free		-	-	X

(X): standard (-): not applicable (O): optional

FUSEBOX TABLE (excluding MAQUILLAGE '92 models)

FUSE		SERVICE PROTECTED	Amps (A)	33 1.3 V 33 1.3 VL 33 1.5 S.W. S.W. 1.3 L	S.W. 4x4	33 (1.3 IE - 1.3 IEL) 33 (1.4 IE - 1.5 IE) S.W. 1.3 IE S.W. 1.3 IEL S.W. 1.5 IE
Symbol	N.					
SERVIZI SERVICES	15	Instruments	10	X	X	X
		Four-wheel drive control unit - + 15 Relay for four-wheel drive power supply - Four-wheel drive malfunction warning light - Four-wheel drive engaged warning light - Supplementary brake light switch		-	X	-
	16	+ 30 Clock - Passenger compartment front rooflight - Passenger compartment central rooflight (specific for S.W. version) - Passenger compartment rear rooflight - Fusebox lighting (post-modification)	20	X	X	X
		Door locking system		O (*)	X	O (#)
	17	+ 15 Lights "on" warning control unit - Direction indicators	7,5	X	X	X
		Relay for front power window		X (/)	X	X (//)

(X): standard (–): not applicable (O): optional (*): standard for S.W. 1.3 L (#): standard for 33 1.3 IE L - 33 1.5 IE - S.W. 1.3 IE L
(/): optional for S.W. (//): optional for S.W. 1.3 IE

FUSEBOX TABLE (excluding MAQUILLAGE '92 models)

FUSE Symbol	FUSE N.	SERVICE PROTECTED	Amps (A)	S.W. 1.3 IE 4x4 S.W. 1.5 IE 4x4	33 1.7 IE 33 16V S.W. 1.7 IE S.W. 16V	33 S 1.7 IE 33 S 16V
SERVIZI SERVICES	15	Instruments	10	X	X	X
		Four-wheel drive control unit - +15 Four wheel drive power supply relay - Four-wheel drive malfunction warning light - Four-wheel drive engaged warning light - Supplementary brake light switch		X	-	-
	16	+30 Clock - Passenger compartment front rooflight - Passenger compartment intermittent rooflight (specific for S.W. version) - Passenger compartment rear rooflight - Fusebox lighting (post-modification) - Door locking system	20	X	X	X
	17	+15 Lights "on" warning control unit - Direction indicators - Relay for front power window	7,5	X	X	X
		+15 Alfa Control		-	X	-

(X): standard (-) : not applicable

FUSEBOX TABLE (excluding MAQUILLAGE '92 models)

FUSE		SERVICE PROTECTED	Amps (A)	33 1.7 IE 4x4 S.W. 1.7 IE 4x4	33 S 16V i.e. Permanent 4	33 TD Intercooler S.W. TD Intercooler
Symbol	N.					
SERVIZI SERVICES	15	Instruments	10	X	X	X
		Four-wheel drive control unit - + 15 Four-wheel drive power supply relay - Supplementary brake light switch		X	X	–
		Four-wheel drive engaged warning light - Four-wheel drive malfunction warning light		X	–	–
		Turbo pressure warning light (post-modification) - + 15 Relay for supplementary engine cooling fan (post-modification)		–	–	X
	16	+ 30 clock - Passenger compartment front rooflight - Passenger compartment central rooflight (specific for S.W. version) - Passenger compartment rear rooflight - Fusebox lighting (post-modification) - Door locking system	20	X	X	X
	17	+ 15 Lights "on" warning control unit - Direction indicators Relay for front power window	7,5	X	X	X
		+ 15 Alfa Control		X	–	–

(X): standard (–): not applicable

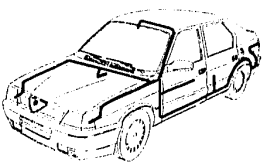

- FUSES (continued)

FUSES

FUSEBOX TABLE
(specific for MAQUILLAGE '92 models) 40-25

FUSES (continued)

FUSEBOX TABLE (specific for MAQUILLAGE '92 models)

FUSE		SERVICE PROTECTED	Amps (A)	33 1.3 V 33 1.3 VL S.W. S.W. 1.3 L	33 1.3 IE 33 1.3 IE L 33 1.5 IE	S.W. 1.3 IE S.W. 1.3 IE L
Symbol	N.					
	1	Hazard warning lights	10	X	X	X
	2	Horns - Cigar lighter - Car radio - Brake lights	20	X	X	X
	3	Windscreen wiper - Electric pump for windscreen washer	20	X	X	X
		Timer for headlight washer		O (#)	O (#)	O (#)
		Rear windscreen wiper - Electric pump for rear windscreen washer		– (*) (/)	–	X (*)
	4	+15 Clock - Reversing light	20	X	X	X
		Rear windscreen wiper reset		– (*) (/)	–	X (*)
		+15 DIM DIP "ON" relay (where applicable) - Dimmer for dipped-beam headlights (where applicable)		X (//)	X (@)	–
		+15 DAY-LIGHT relays (where applicable) - Heated seats (where applicable)		–	X (@)	–

(X): standard (–): not applicable (O): optional (@): only for 33 1.5 IE (#): not applicable for 33 1.3 V - 33 1.3 IE - S.W. - S.W. 1.3 IE
(//): only for 33 1.3 V - 33 1.3 VL (*): optional for S.W. - S.W. 1.3 IE (/): standard for S.W. 1.3 L

FUSEBOX TABLE (specific for MAQUILLAGE '92 models)

FUSE		SERVICE PROTECTED	Amps (A)	S.W. 1.3 IE 4x4	33 1.7 IE S.W. 1.7 IE S.W. 16V	33 16V
Symbol	N.					
	1	Hazard warning lights	10	X	X	X
	2	Horns - Cigar lighter (excluding Australian version) - Car radio - Brake lights	20	X	X	X
	3	Windscreen wiper - Electric pump for windscreen washers - Rear windscreen wiper - Electric pump for rear windscreen washer	20	X	X	X
		Timer for headlight washer		O	O	O
	4	+ 15 Clock - Reversing light - Rear windscreen wiper reset	20	X	X	X
		+ 15 DIM DIP "ON" relay (where applicable) - Dimmer for dipped-beam headlights (where applicable)		-	X (#)	X
		+ 15 DAY-LIGHT relays (where applicable) - Heated seats (where applicable)		-	X (/)	X
		Cigar lighter (specific for Australian version)		-	-	X

(X): standard (-): not applicable (O): optional (#): excluding S.W. 1.7 IE (/): excluding S.W. 16V

FUSEBOX TABLE (specific for MAQUILLAGE '92 models)

FUSE Symbol	FUSE N.	SERVICE PROTECTED	Amps (A)	33 1.7 IE 4x4 S.W. 1.7 IE 4x4	33 S.W.	33 TD Intercooler S.W. TD Intercooler
	1	Hazard warning lights	10	X	X	X
	2	Horns - Cigar lighter (excluding Australian versions) - Car radio - Brake lights	20	X	X	X
	3	Windscreen wiper - Electric pump for windscreen washer - Rear windscreen wiper - Electric pump for rear windscreen washer	20	X	X	X
		Timer for headlight washer		O	O	O
	4	+ 15 Clock - Reversing light	20	X	X	X
		Rear windscreen wiper reset		X	X	X
		+ 15 Relay for fuel pre-heating device - + 15 Timer for fuel pre-heating		–	–	X
		+ 15 DIM DIP "ON" relay (where applicable) - dimmer for dipped-beam headlights (where applicable)		–	X (*)	–
		+ 15 DAY-LIGHT relays (where applicable) - Heated seats (where applicable)		X	X (*)	–
		Cigar lighter (specific for Australian version)		–	X (*)	–

(X): standard (–): not applicable (O): optional (*): excluding S.W. models

FUSEBOX TABLE (specific for MAQUILLAGE '92 models)

FUSE Symbol	FUSE N.	SERVICE PROTECTED	Amps (A)	33 1.3 V 33 1.3 VL S.W. S.W. 1.3 L	33 1.3 IE 33 1.3 IE L 33 1.5 IE	S.W. 1.3 IE S.W. 1.3 IE L
	5	Front-right and rear-left sidelights - Sidelights warning light - Numberplate lights - Front foglights permit - Lighting for heating/ventilation controls - Lighting for cigar lighter and ashtray - Glovebox light - lighting for instrument panel - Clock lighting - Permit for lights "on" warning control unit	10	X	X	X
		Headlight corrector		O (/)	O (/)	O (/)
		DIM DIP "on and off" relays (where applicable)		X (*)	X (#)	–
	6	Front-left and rear-right sidelights - Boot light (excluding S.W. models)	10	X	X	X
		Permit for headlight washers		O	O	O

(X): standard (–): not applicable (O): optional (*): excluding S.W. models (#): only for 33 1.5 IE
(/): not applicable for 33 1.3 V - 33 1.3 IE - S.W. - S.W. 1.3 IE

FUSEBOX TABLE (specific for MAQUILLAGE '92 models)

FUSE		SERVICE PROTECTED	Amps (A)	S.W. 1.3 IE 4x4	33 1.7 IE S.W.1.7 IE S.W.16V	33 16V
Symbol	N.					
	5	Alfa Control (Front-right and rear-left sidelights)	10	-	X	-
		Front-left and rear-right sidelights		X	-	X
		Sidelights warning light - Numberplate lights - Front foglights permit - Lighting for heating/ventilation controls - Lighting for cigar lighter and ashtray - Glovebox light - Lighting for instrument panel - Clock lighting - Permit for lights "on" warning control unit		X	X	X
		Headlight corrector		O	O	O
		DIM DIP "on and off" relays (where applicable)		-	-	X
		Dimmer for instrument lighting (where applicable)		-	-	X
	6	Alfa Control (Front-left and rear-right sidelights) - Lighting for Alfa Control	10	-	X	-
		Front-right and rear-left sidelights		X	-	X
		Permit for headlight washers		O	O	O
		Boot light (excluding S.W. models)		-	X	X
		DIM DIP "on and off" relays (where applicable)		-	X(*)	-

(X): standard (-): not applicable (O): optional (*): excluding S.W. 1.7 IE

FUSEROX TABLE (specific for MAGUI'.LAGE '92 models)

FUSE Symbol	FUSE N.	SERVICE PROTECTED	Amps (A)	33 1.7 IE 4x4 S.W. 1.7 IE 4x4	33 [illegible] S.W. [illegible]	33 TD Intercooler S.W. TD Intercooler
	5	Alfa Control (Front-right and rear-left sidelights)	10	X	-	-
		Front-left and rear-right sidelights		-	X	X
		Sidelights warning light - Numberplate lights - Front foglights permit - Lighting for heating/ventilation controls - Lighting for cigar lighter and ashtray - Glovebox light - Lighting for instrument panel - Clock lighting - Permit for lights "on" warning control unit		X	X	X
		Headlight corrector		O	O	O
		DIM DIP "on and off" relays (where applicable)		-	X (*)	-
		Dimmer for instrument lighting (where applicable)		-	X (*)	-
	6	Alfa Control (Front-left and rear-right sidelights) - Lighting for Alfa Control	10	X	-	-
		Front-right and rear-left sidelights		-	X	X
		Permit for headlight washers		O	O	O
		Boot light (excluding S.W. models)		X	X	X

(X): standard (-): not applicable (O): optional (*): excluding S.W. models

FUSEBOX TABLE (specific for MAQUILLAGE '92 models)

FUSE		SERVICE PROTECTED	Amps (A)	33 1.3 V 33 1.3 VL S.W. S.W. 1.3 L	33 1.3 IE 33 1.3 IE L 33 1.5 IE	S.W. 1.3 IE S.W. 1.3 IE L
Symbol	N.					
	7	Right-hand dipped beam headlight	10	X	X	X
	8	Left-hand dipped-beam headlight	10	X	X	X
	9	Right-hand main-beam headlight	10	X	X	X
	10	Left-hand main-beam headlight - Headlight warning light	10	X	X	X
	11	Rear foglight	7,5	X	X	X
	12	Heated rear windscreen	20	X	X	X
	13	+ 15 Relay for Electric heater/air conditioner	7,5	X/–	X/O	X/O
	14	Engine cooling fan	25	X	X	X

(X): standard (–): not applicable (O): optional

FUSEBOX TABLE (specific for MAQUILLAGE '92 models)

FUSE		SERVICE PROTECTED	Amps (A)	S.W. 1.3 IE 4x4	33 1.7 IE S.W. 1.7 IE S.W. 16V	33 16V
Symbol	N.					
	7	Right-hand dipped beam headlight	10	X	X	X
	8	Left-hand dipped-beam headlight	10	X	X	X
	9	Right-hand main-beam headlight	10	X	X	X
	10	Left-hand main-beam headlight - Headlight warning light	10	X	X	X
	11	Rear foglight	7,5	X	X	X
	12	Heated rear windscreen	20	X	X	X
	13	+ 15 Relay for Electric heater/air conditioner	7,5	X/O	X/O	X/O
	14	Engine cooling fan	25	X	X	X

(X): standard (O): optional

FUSE BOX TABLE (specific for MAQUILLAGE '92 models)

FUSE		SERVICE PROTECTED	Amps (A)	33 1.7 IE 4x4 S.W. 1.7 IE 4x4	33 [illegible] S.W. [illegible]	33 TD Intercooler S.W. TD Intercooler
Symbol	N.					
	7	Right-hand dipped beam headlight	10	X	X	X
	8	Left-hand dipped-beam headlight	10	X	X	X
	9	Right-hand main-beam headlight	10	X	X	X
	10	Left-hand main-beam headlight - Headlight warning light	10	X	X	X
	11	Rear foglight	7,5	X	X	X
	12	Heated rear windscreen	20	X	X	X
	13	+ 15 Relay for Electric heater/air conditioner	7,5	X/O	X/O	X/–
	14	Engine cooling fan	25	X	X	–
		Free		–	–	X

(X): standard (–): not applicable (O): optional



FUSEBOX TABLE (specific for MAQUILLAGE '92 models)

FUSE		SERVICE PROTECTED	Amps (A)	33 1.3 V 33 1.3 VL S.W. S.W. 1.3 L	33 1.3 IE 33 1.3 IE L 33 1.5 IE	S.W. 1.3 IE S.W. 1.3 IE L
Symbol	N.					
SERVIZI SERVICES	15	Instruments	10	X	X	X
	16	+ 30 Clock - Passenger compartment front rooflight - Passenger compartment central rooflight (specific for S.W. version) - Passenger compartment rear rooflight - Fusebox lighting	20	X	X	X
		Door locking system		X (*)	X (#)	X (/)
	17	+ 15 Lights "on" warning control unit - Direction indicators	7,5	X	X	X
		Relay for front power window		X (//)	X	X (/)

(X): standard (*):optional for 33 1.3 V - S.W. (#): optional for 33 1.3 IE (/): optional for S.W. 1.3 IE (//): optional for S.W.



FUSEBOX TABLE (specific for MAQUILLAGE '92 models)

FUSE		SERVICE PROTECTED	Amps (A)	S.W. 1.3 IE 4x4	33 1.7 IE S.W. 1.7 IE S.W. 16V	33 16V
Symbol	N.					
SERVIZI SERVICES	16	Instruments	10	X	X	X
		Four-wheel drive control unit - + 15 Relay for four-wheel drive - Four-wheel drive malfunction warning light - Four-wheel drive engaged warning light - Supplementary brake light switch		X	-	-
	18	+30 Clock - Passenger compartment front rooflight - Passenger compartment central rooflight (specific for S.W. version) - Passenger compartment rear rooflight - Fusebox lighting - door locking system	20	X	X	X
	17	+15 Lights "on" warning control unit - Direction indicators Relay for front power window	7.5	X	X	X
		+15 Alfa Control		-	X	-

(X): standard (-): not applicable

FUSEBOX TABLE (specific for MAQUILLAGE '92 models)

FUSE		SERVICE PROTECTED	Amps (A)	33 1.7 IE 4x4 S.W. 1.7 IE 4x4	33 DCL S.W. DCL	33 TD Intercooler S.W. TD Intercooler
Symbol	N.					
SERVIZI SERVICES	15	Instruments	10	X	X	X
		Four-wheel drive control unit - + 15 Four-wheel drive power supply relay - Supplementary brake light switch		X	X	–
		Four-wheel drive engaged warning light - Four-wheel drive malfunction warning light		X	–	–
		Turbo pressure warning light - + 15 Relay for supplementary engine cooling fan		–	–	X
	16	+ 30 Clock - Passenger compartment front rooflight - Passenger compartment central rooflight (specific for S.W. version) - Passenger compartment rear rooflight - Fusebox lighting - door locking system	20	X	X	X
	17	+ 15 Lights "on" warning control unit - Direction indicators Relay for front power window	7,5	X	X	X
		+ 15 Alfa Control		X	–	–

(X): standard (–): not applicable

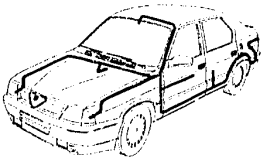

- RELAYS AND FLASHER UNITS
- FUSE AND RELAY BOX

RELAYS AND FLASHER UNITS

LOCATION AND ACCESS IN ENGINE COMPARTMENT 40-37
Specific for engines with two carburettors 40-37
Specific for engine with IAW electronic injection 40-38
Specific for engines with LE3-JETRONIC electronic injection 40-39
Specific for engines with MOTRONIC MP3.1 electronic injection 40-41
Specific for engine with MOTRONIC ML4.1 electronic injection 40-43
Specific for turbodiesel engine 40-45
LOCATION AND ACCESS IN PASSENGER COMPARTMENT 40-46
Relay for power windows 40-46
Relay for electric heater/air conditioner (post-modification) 40-47
Direction indicators and hazard warning lights flasher unit (post-modification) 40-48
Relay for heating-ventilation fan speed selector 40-49
Fuse and relay box 40-50

FUSE AND RELAY BOX

REMOVAL - REFITTING 40-52

RELAYS AND FLASHER UNITS

LOCATION AND ACCESS IN ENGINE COMPARTMENT (Specific for engines with two carburettors)

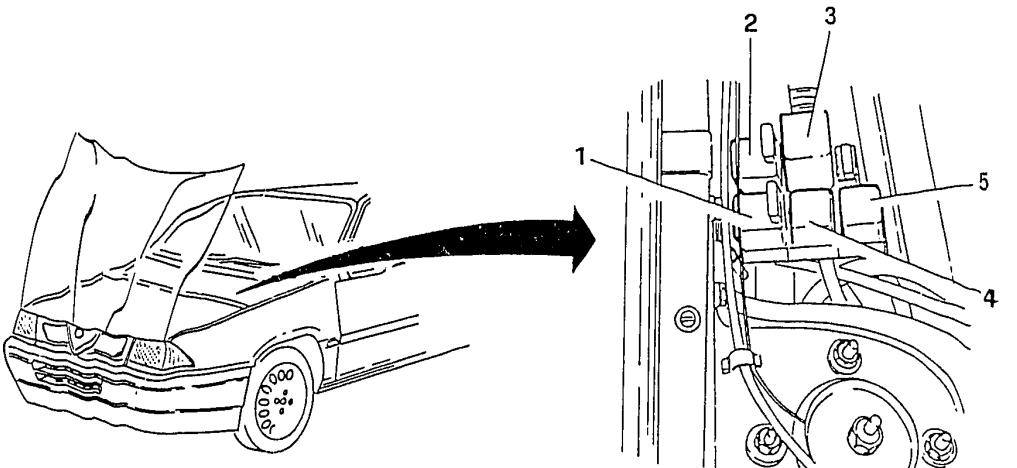

1. Relay for front foglight.
2. Relay for four-wheel drive power supply (specific for 4x4 versions).
3. Timer for headlight washers.
4. DIM DIP "on" relay (where applicable).
5. DIM DIP "off" relay (where applicable).

LOCATION AND ACCESS IN ENGINE COMPARTMENT (Specific for engine with IAW electronic injection)

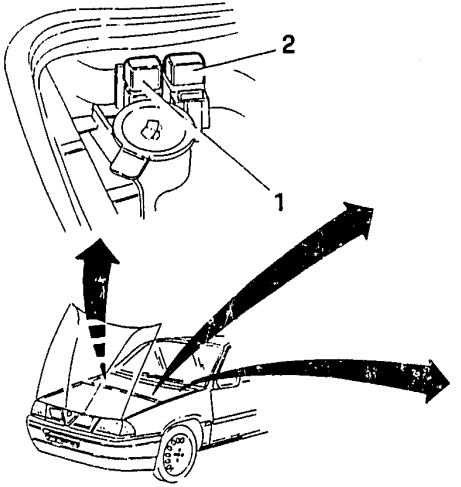

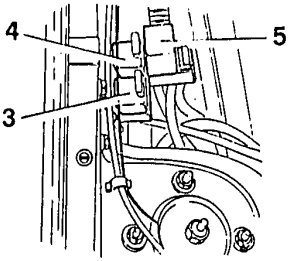

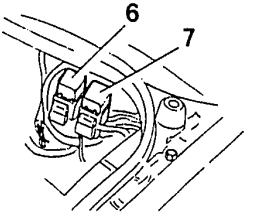

1. Injection system main relay.
2. Injection system secondary relay.
3. Relay for front foglight.
4. Relay for four-wheel drive power supply (for 4x4 versions).
5. Timer for headlight washer.
6. Electric fan control relay for right-hand condenser.
7. Compressor electromagnetic coupling simultaneous control relay and electric fan for left-hand condenser.

LOCATION AND ACCESS IN ENGINE COMPARTMENT (Specific for engines with LE3-JETRONIC electronic injection)

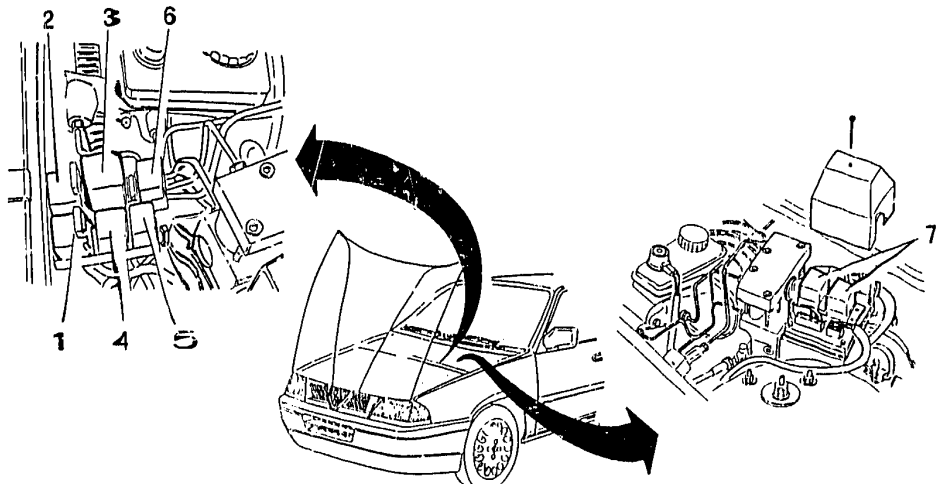

1. Relay for front foglight.
2. Relay for four-wheel drive power supply (specific for 4x4 version)
3. Timer for headlight washers.
4. DIM DIP "on" relay (where applicable).
   DAY-LIGHT "off" relay (where applicable).
5. DIM DIP "off" relay (where applicable).
   Relay for excluding front foglight - permit for rear foglight (where applicable).
6. DAY-LIGHT "on" relay (where applicable).
7. ABS relays.

LOCATION AND ACCESS IN ENGINE COMPARTMENT
(Specific for engines with LE3-JETRONIC electronic injection) (continued)

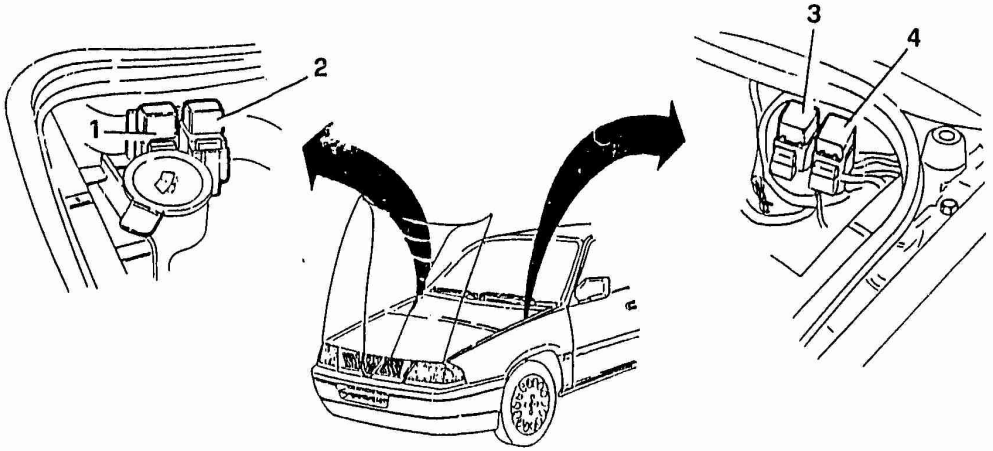

1. Injection control relay.
2. Fuel pump relay.
3. Electric fan control relay for right-hand condenser.
4. Compressor electromagnetic coupling simultaneous control relay and electric fan for left-hand condenser.

LOCATION AND ACCESS IN ENGINE COMPARTMENT
(Specific for engines with MOTRONIC MP3.1 electronic injection)

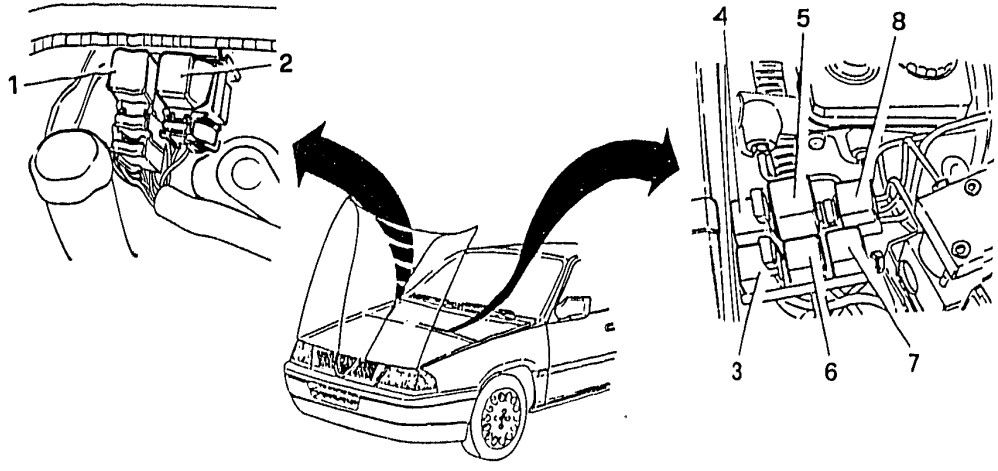

1. Motronic fuel pump relay.
2. Motronic relay with diode.
3. Relay for front foglight.
4. Relay for four-wheel drive power supply (for 4x4 versions).
5. Timer for headlight washer.
6. DIM DIP "on" relay (where applicable).
   DAY LIGHT (where applicable).
7. DIM DIP exclusion relay (where applicable).
   Front foglight exclusion - rear foglight permit relay (where applicable).
8. DAY LIGHT engagement relay (where applicable).

LOCATION AND ACCESS IN ENGINE COMPARTMENT
(Specific for engines with MOTRONIC MP3.1 electronic injection) (continued)

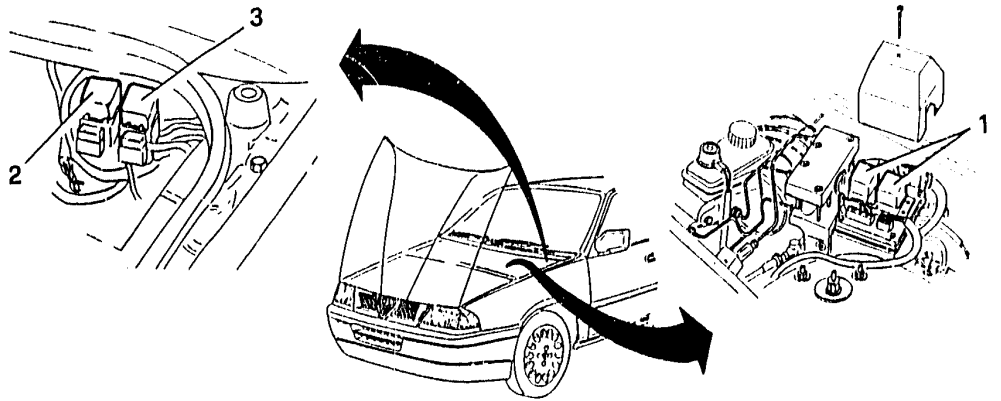

1. ABS relays.
2. Electric fan control relay for right-hand condenser.
3. Compressor electromagnetic coupling simultaneous control relay and electric fan for left-hand condenser.

LOCATION AND ACCESS IN ENGINE COMPARTMENT
(Specific for engines with MOTRONIC ML4.1 electronic injection)

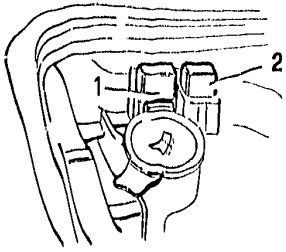

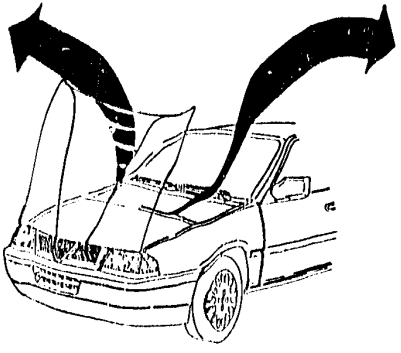

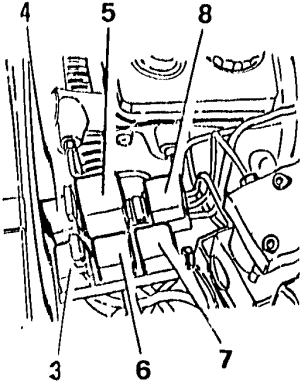

1. Motronic fuel pump relay.
2. Motronic relay with diode.
3. Relay for front foglight.
4. Relay for four-wheel drive power supply (for 4x4 versions).
5. Timer for headlight washer.
6. DIM DIP "on" relay (where applicable).
   DAY LIGHT (where applicable).
7. DIM DIP exclusion relay (where applicable).
   Front foglight exclusion - rear foglight permit relay (where applicable).
8. DAY LIGHT engagement relay (where applicable).

LOCATION AND ACCESS IN ENGINE COMPARTMENT
(Specific for engine with MOTRONIC ML4.1 electronic injection) (continued)

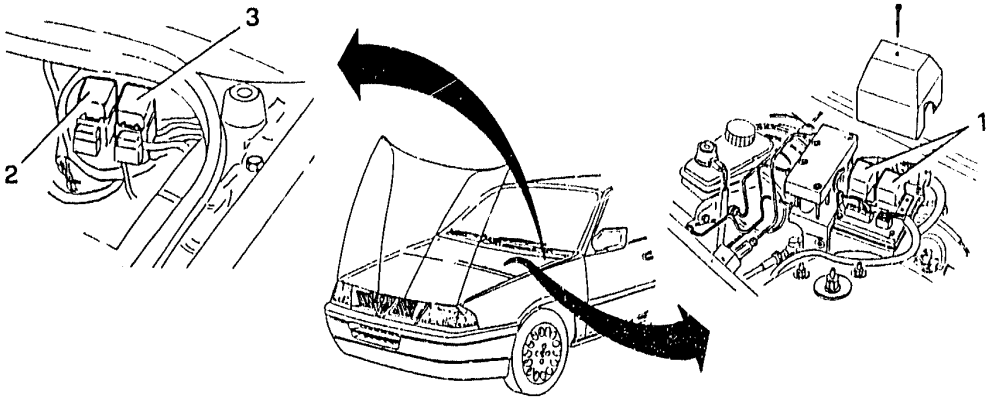

1. ABS relays.
2. Electric fan control relay for right-hand condenser.
3. Compressor electromagnetic coupling simultaneous control relay and electric fan for left-hand condenser.

LOCATION AND ACCESS IN ENGINE COMPARTMENT (Specific for turbodiesel engine)

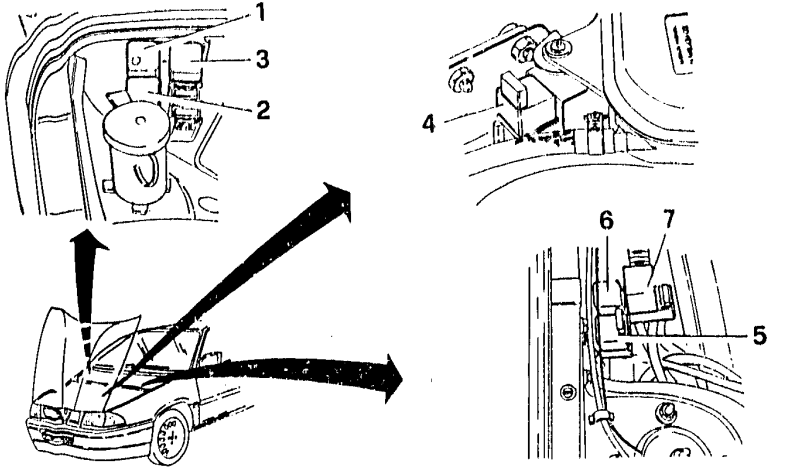

1. Engine water cooling supplementary electric fan relay.
2. Engine water cooling electric fan relay.
3. Parallel series relay (for electric cooling fan).
4. Relay for fuel pre-heating device.
5. Relay for front foglight.
6. Ignition permit relay.
7. Timer for headlight washers.

REALYS AND FLASHER UNITS (continued)

LOCATION AND ACCESS IN PASSENGER COMPARTMENT

Relay for power windows

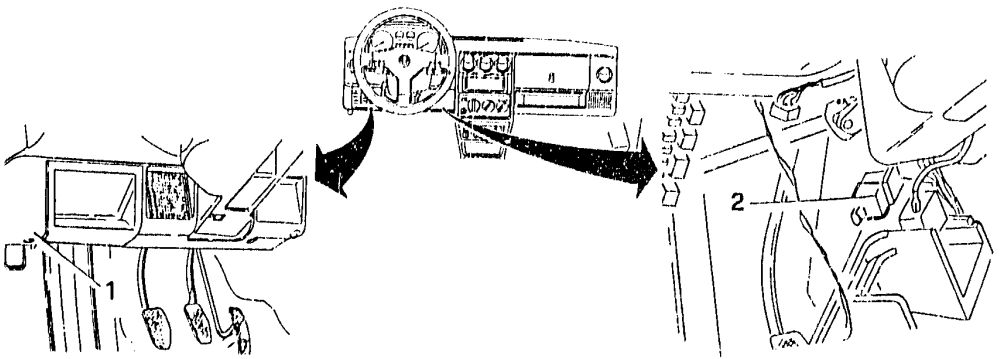

1. Remove the trim from under the left-hand side of the dashboard (see **GROUP 66**).
2. Gain access to the power window relay on the back of the removed trim.

LOCATION AND ACCESS IN PASSENGER COMPARTMENT (continued)
Relay for electric heater/air conditioner (post- modification)

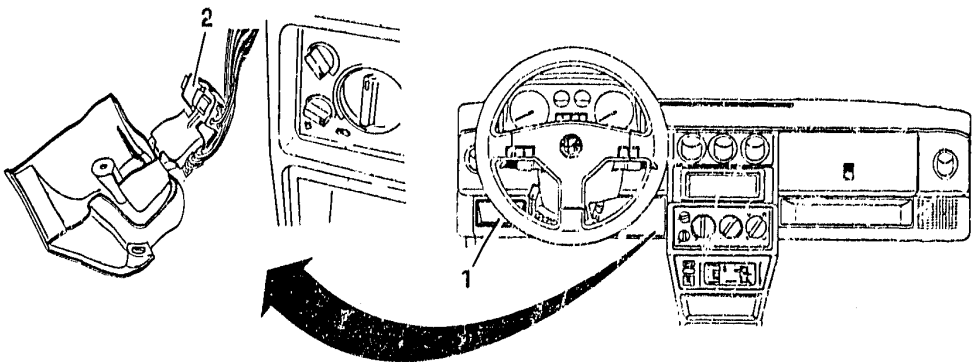

1. Remove the trim from under the left-hand side of the dashboard (see GROUP 66).
2. Gain access to the electric heater/air conitioner relay on the back of the removed trim.

LOCATION AND ACCESS IN PASSENGER COMPARTMENT (continued)

Direction indicators and hazard warning lights flasher unit (post-modification)

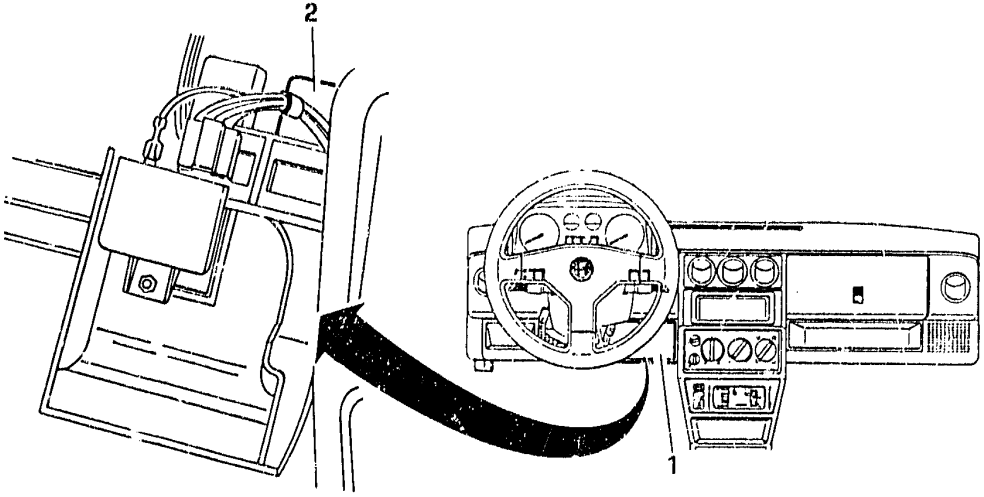

1. Remove the covering from under the left-hand side of the dashboard (see **GROUP 66**).
2. Gain access to the direction indicators and hazard warning lights flasher unit on the back of the removed trim.

LOCATION AND ACCESS IN PASSENGER COMPARTMENT (continued)

Relay for heating-ventilation fan speed selector

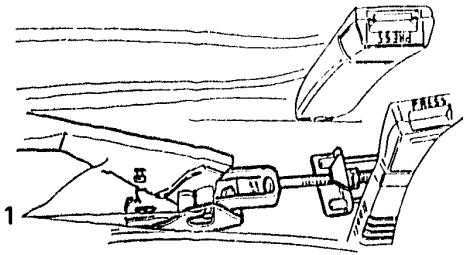

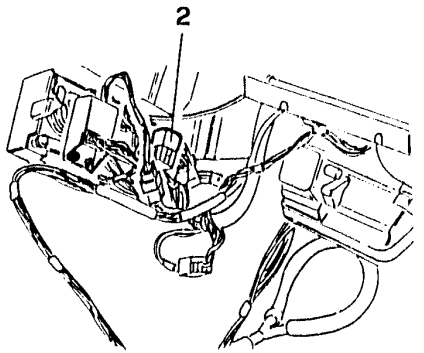

- Remove the rear console (see GR. 66).
1. Disconnect the handbrake lever from its support by unscrewing the bolt.
- Remove the right and left-hand trimming from under the dashboard (see GR. 66).
- Remove the gearbox central console (see GR. 66).
2. Access can now be gained to the speed selector relay for the heating- ventilation electric fan.

LOCATION AND ACCESS IN PASSENGER COMPARTMENT (continued)

Fuse and relay box

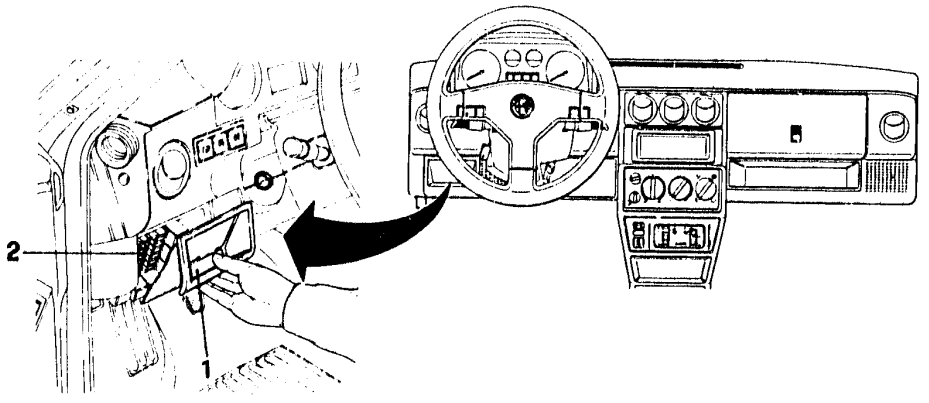

1. Remove the pressure fitted compartment
2. Gain access to the fuse and relay box.

LOCATION AND ACCESS IN PASSENGER COMPARTMENT

Fuse and relay box (continued)

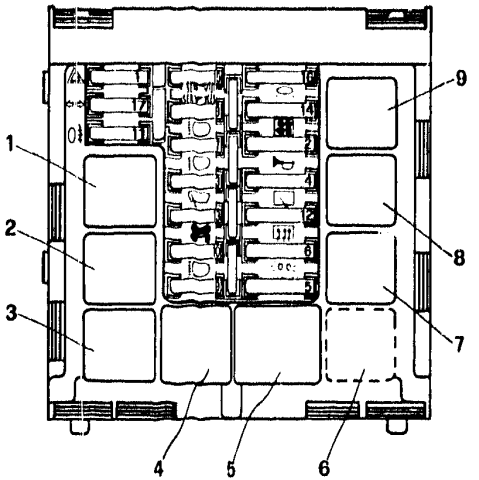

1. Relay for dipped-beam headlights.
2. Relay for key operated supply.
3. Relay for main-beam headlights.
4. Windscreen wiper electronic intermittence.
5. Intermitterice for hazard warning lights and direction indicators (pre-modification).
6. Relay for sidelights (when requested).
7. Relay for rear foglights.
8. Relay for heated rear windscreen.
9. Realy for horns.

FUSE AND RELAY BOX
REMOVAL - REFITTING

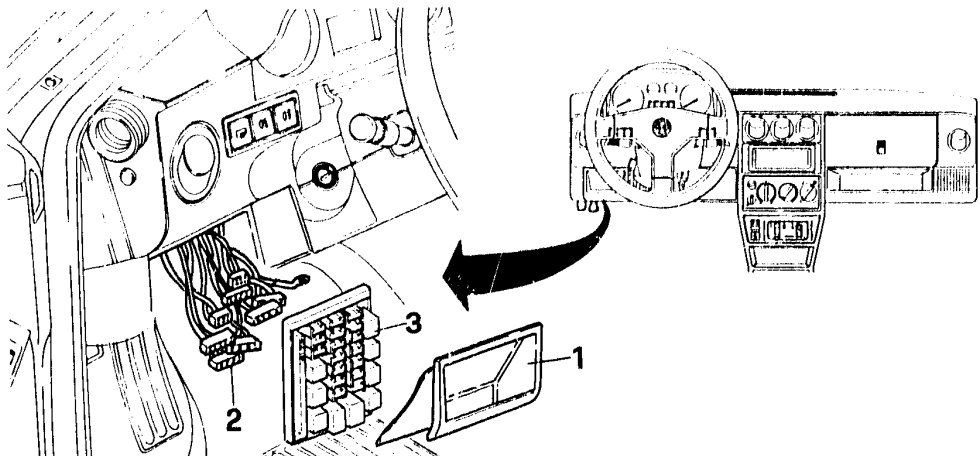

1. Remove the pressure fitted compartment.
- Unscrew the nuts securing the fuse and relay box.
2. Disconnect the connectors from the fuse and relay box.
3. Remove the fuse and relay box.

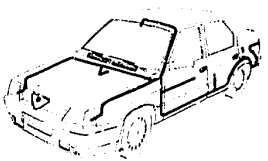

- EXTERNAL LIGHTING SYSTEM

EXTERNAL LIGHTING SYSTEM

BULBS 40-53
Bulb table 40-53
Replacing bulbs 40-55
STALK UNIT 40-56
Removal - Refitting 40-56
FRONT LIGHT ASSEMBLIES 40-57
Assembly 40-57
Replacing the light unit 40-58
Headlight alignment 40-60
Replacing sidelights 40-61
Replacing the front direction indicators 40-62
Replacing the main and dipped beam headlights 40-63
Adjusting headlights to vehicle of loading
(on vehicles without headlight alignment corrector) 40-64
(on vehicles with headlight alignment corrector) 40-65
Alignment of dipped beam headlights
(on vehicles without headlight alignment correctors) 40-66
(on vehicles with headlight alignment corrector) 40-67
Replacing the front direction indicator 40-68

EXTERNAL LIGHTING SYSTEM

BULBS

Bulb table

The bulb table (type and electrical power absorbed) are listed in the following table:

Service	Electrical power (W)	Type
Reversing lights	21	B
Rear foglight	21	B
Numberplate lights (*)	5	C
Numberplate lights (**)	5	B
Side direction indicators	5	D
Rear direction indicators	21	B
Stoplights (*)	21	B

(*)Specific for 33 models (**) Specific for Sport Wagon models

BULBS

Bulb table (continued)

Service	Electrical power (W)	Type
Sidelights-brakelights (**)	5/21	B
Rear sidelights (*)	10	B
Rear sidelights (**)	5	B
Front foglights (•)	55	A
Front direction indicators	21	B
Front sidelights	5	D
Main/dipped beam headlights	55/60	A

(•) Optional (*) Specific for 33 models (**) Specific for Sport Wagon models

BULBS (continued)
Replacing bulbs

Four different types of bulbs are used on the vehicle. Follow the procedures given below for their removal and fitting.

Name	Type		How to remove from holder
Iodine bulb	A	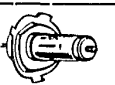	- Disconnect the connector - Release the clip
Bayonet bulb	B		- Press the bulb down into the holder - Twist anticlockwise
Cylindrical bulb	C	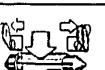	- Pull upwards away from the holder
All-glass bulb	D		- Pull upwards away from the holder

STALK UNIT
Removal - Refitting

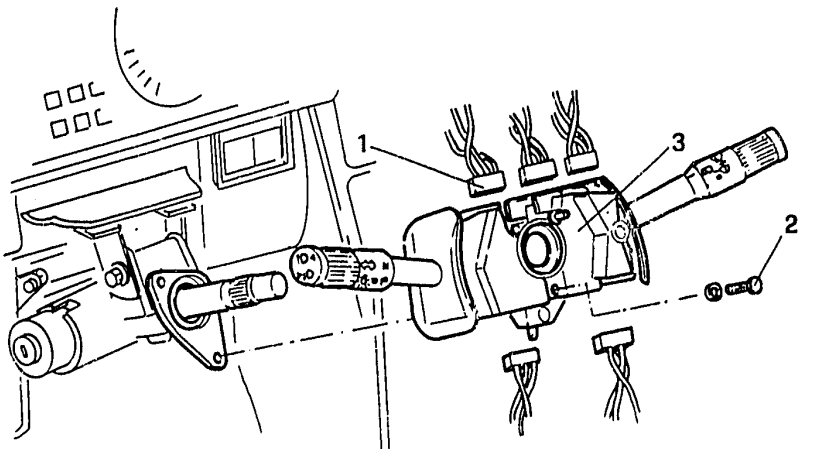

- Remove the steering wheel and the steering casing halves (see GR. 23).
1. Disconnect the electrical connections from the stalk unit.
2. Loosen the two retaining screws.
3. Remove the stalk unit.

FRONT LIGHT ASSEMBLIES

Assembly

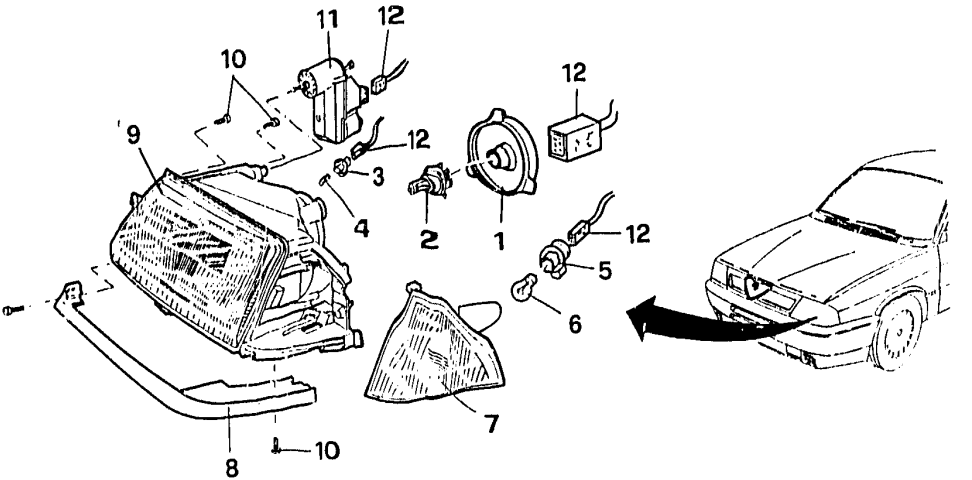

1 Protective cap
2 Halogen light
3 Bulb holder
4 Sidelights bulb
5 Bulb holder
6 Direction indicator bulb
7 Direction indicator light assembly
8 Frame
9 Headlight
10 Screws securing headlight
11 Headlight alignment corrector (where applicable)
12 Connector

FRONT LIGHT ASSEMBLIES (continued)
Replacing the light unit

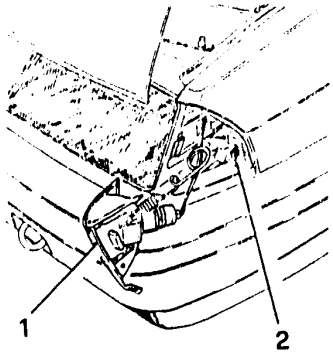

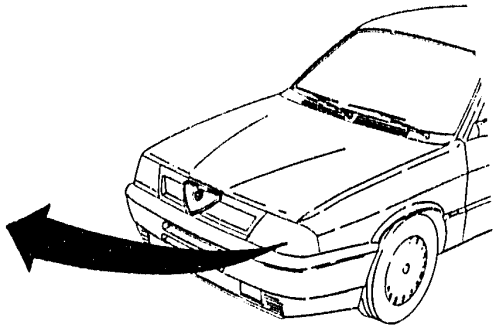

- Remove the front grille (see GR. 75).
1. Disassemble the direction indicator light assembly (see specific procedure).
2. Loosen the screws securing the headlight to the wing.

FRONT LIGHT ASSEMBLIES

Replacing the light unit (continued)

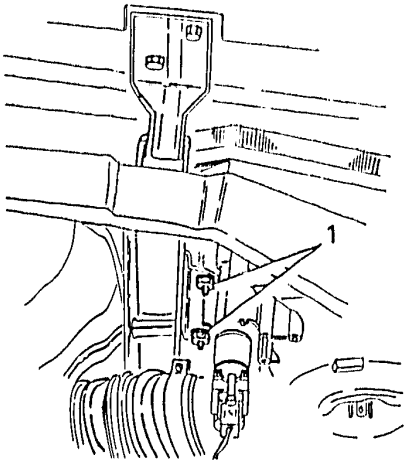

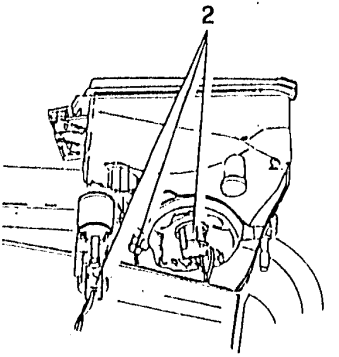

1. Unscrew the two nuts securing the unit to the body.
2. Remove the unit and disconnect the three electrical connections.

- Replace the unit and check the adjustment of the dipped-beam headlights (see specific procedure).

FRONT LIGHT ASSEMBLIES (continued)
Headlight alignment

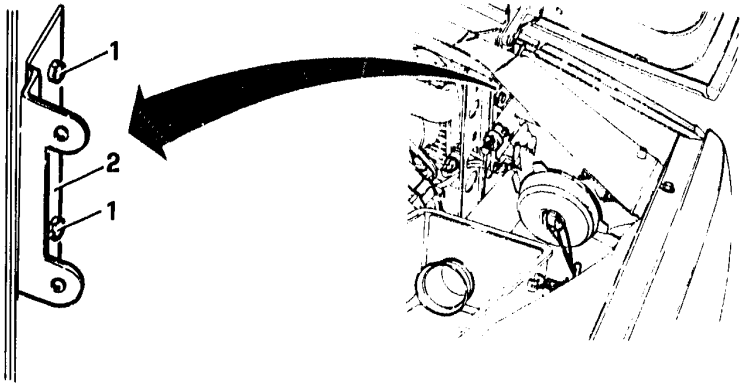

- Detach the front grille (see GR. 75).
- Disassemble the direction indicator light assembly (see specific procedure).
- Disassemble the light assembly (see specific procedure).

1. Loosen the 2 screws securing the light alignment bracket but do not remove them.
2. Adjust the bracket so that when the headlight is installed it is in line with the bonnet/wing.

- Lock the two previously loosened screws.
- Refit ensuring that the headlights are correctly aligned (see specific procedure).

FRONT LIGHT ASSEMBLIES (continued)
Replacing sidelights

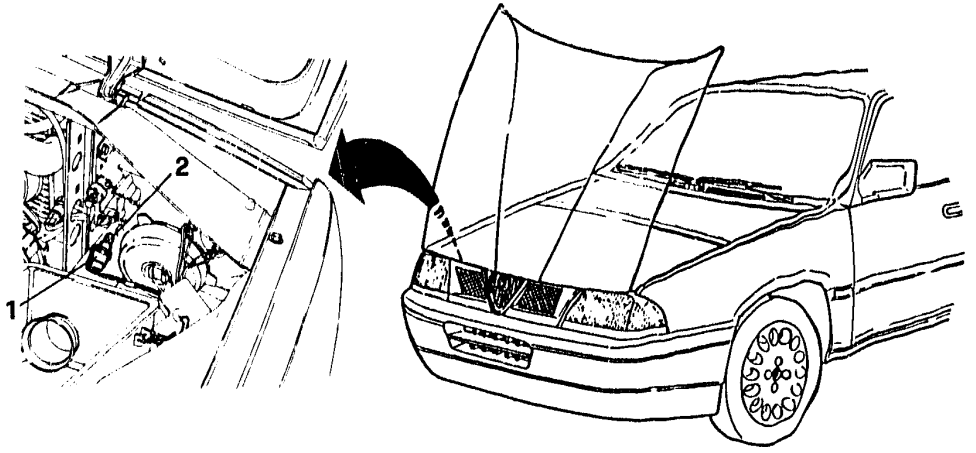

1. Remove the bulb holder, rotate it anticlockwise and withdraw it
2. Remove and replace the bulb.

- When refitting, align the reference marks on the bulb holder with those on the light assembly and then press and rotate clockwise.

FRONT LIGHT ASSEMBLIES (continued)
Replacing the front direction indicators.

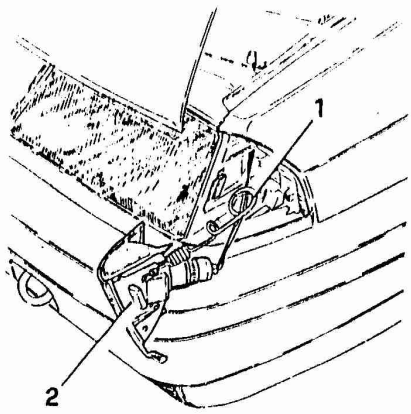

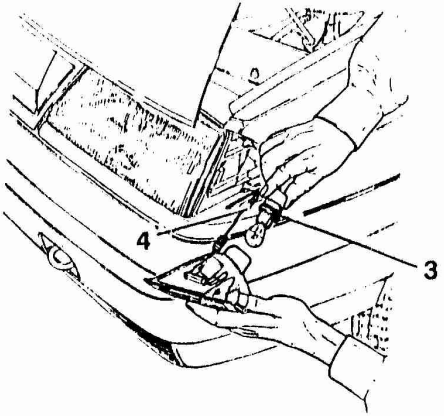

1. Working from the engine compartment, grasp the retaining clip on the lateral light assembly and unhook it by pulling it towards the outer side of the vehicle.
2. Withdraw the lateral light assembly.
3. Rotate the bulb holder anticlockwise and remove it.
- Withdraw the bulb and replace it.

4. When refitting, after inserting the bulb holder in its seating, insert the light assembly ensuring that it is correctly fitted and then (working from inside the engine compartment) hook the retaining clip in place by pulling it inwards.

FRONT LIGHT ASSEMBL 188 (continued)
Replacing the main and dipped beam headlights

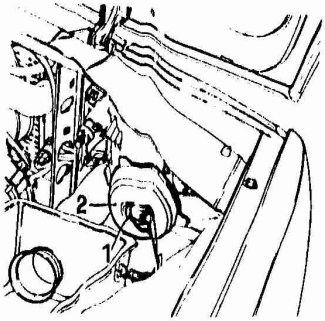

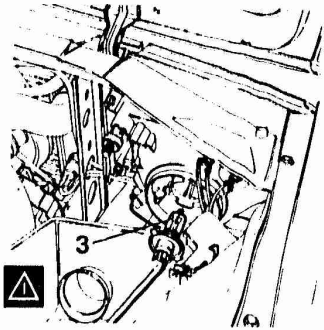

1. Disconnect the press-fitted connector.
2. Remove the rubber protection.
3. Free the bulb from the retaining clips and replace the bulb.
- When refitting ensure that the bulb is correctly fitted and that the reference marks on the cup are in line with those on the light assembly.

Never touch the halogen bulb with your hands. If you do, clean the bulb with methylated spirits before replacing it.

FRONT LIGHT ASSEMBLIES (continued)

Adjusting headlights to vehicle loading (on vehicles without headlight alignment corrector).

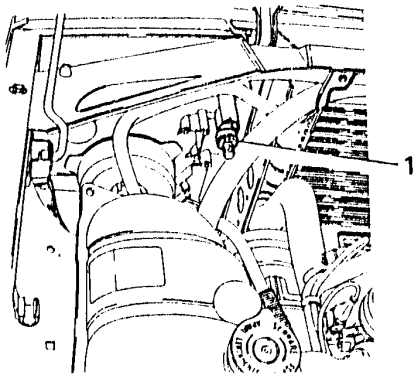

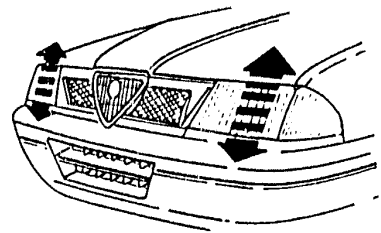

1. Adjust the orientation of the parabolas by acting on the regulation knobs on the two light assemblies.
- A series of numbers is written on the knobs (1 - 2 - 3) and these numbers correspond to the position of the light adjustment chosen when adjusting them to the vehicle load.

POSITION KNOB	LOAD
1	Unloaded vehicle
2	Partially loaded vehicle
3	Fully loaded vehicle

FRONT LIGHT ASSEMBLIES (continued)

Headlight adjustment to vehicle load (for vehicles with headlight alignment corrector).

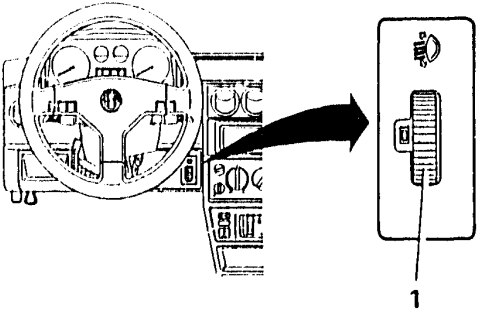

POSITION SWITCH	LOAD
0	1 or 2 people on the front seats, full fuel tank, on-board equipment
1	5 people, full fuel tank, on-board equipment
2	5 people, full fuel tank, on-board equipment, 50 kg in the luggage compartment
3	1 person (driver), full fuel tank, on-board equipment, 300 kg in tank

1. Adjust the parabolas by acting on the headlight alignment switch.
- The switch carries a series of numbers (0 - 1 - 2 - 3) corresponding to the different positions of the lights which may be chosen on the basis of the vehicle load.

FRONT LIGHT ASSEMBLIES (continued)

Alignment of dipped beam headlights (on vehicles without headlight alignment correctors).

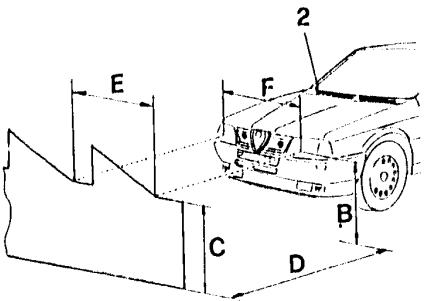

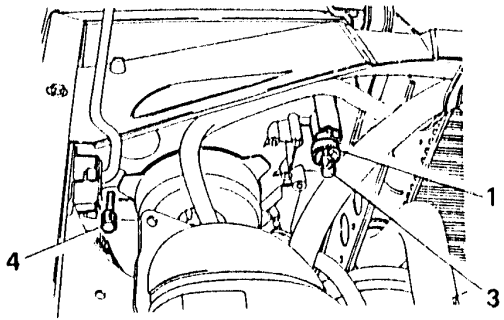

- Check that all the tyres are correctly inflated and that the vehicle is completely unloaded and the fuel tank empty.

1. Set the headlight alignment knob to position (1) (vehicle empty).

- Park the vehicle and any test equipment on a level surface. If test equipment is unavailable, place the vehicle in front of a light coloured surface.

2. Back off the vehicle by 10 m and switch on the dipped beam headlights. The beam of light must be within the following geometric values:

B = Height of the centre of the light from the ground (mm)
C = height of beam (mm)
D = 10 m
The orientation is correct when C = B - 100

3. Acting on the regulation screw, raise or lower the beam until the correct orientation is obtained.
   The distance between the centre lines of the beams must be the same as that between the headlights (E = F).
4. To correct any errors in the orientation, act on the headlight adjustment screw located in the engine compartment.

FRONT LIGHT ASSEMBLIES (Continued)

Alignment of dipped beam headlights (on vehicles without headlight alignment corrector)

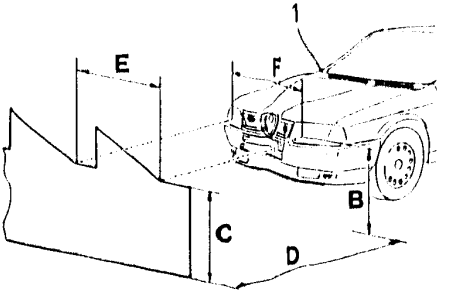

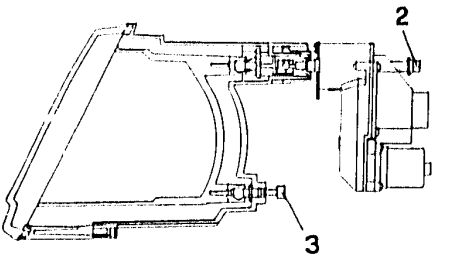

- Check that all the tyres are correctly inflated and that the vehicle is completely unloaded and the fuel tank empty.
- With the ignition key in the "MARCIA" position turn the headlight alignment switch to position "0".
- Park the vehicle and any test equipment on a level surface. If test equipment is unavailable, place the vehicle in front of a light coloured surface.

1. Back off the vehicle by 10 m and switch on the dipped beam headlights. The beam of light must be within the following geometric values:

B = Height of the centre of the light from the ground (mm)
C = height of beam (mm)
D = 10 m
The orientation is correct when C = B - 100 (mm)

2. Acting on the regulation screw, raise or lower the beam until the correct orientation is obtained. The distance between the centre lines of the beams must be the same as that between the headlights (E = F).
3. To correct any errors in the orientation, act on the headlight adjustment screw located in the engine compartment.

FRONT LIGHT ASSEMBLIES (continued)

Replacing the front direction indicator

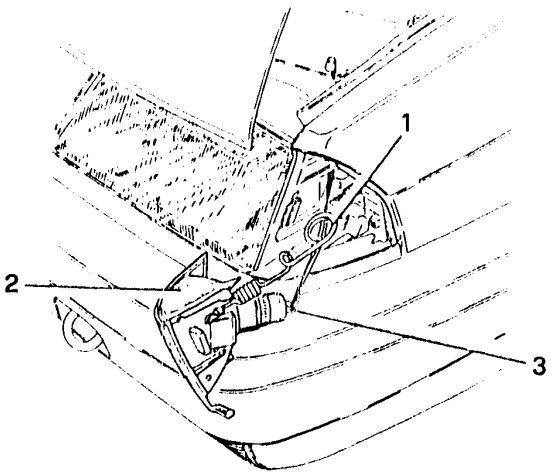

- The substitution of the lateral light assembly should be carried out by acting from inside the engine compartment.

1. Grasp the retaining clip of the light assembly and unhook it by pulling it outwards.
2. Withdraw the lateral light assembly.
3. Disconnect the electrical connection.

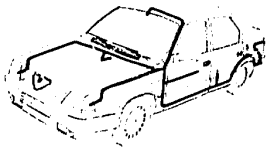

- EXTERNAL LIGHTING SYSTEM (continued)
- INTERNAL LIGHTING SYSTEM

EXTERNAL LIGHTING SYSTEM

FRONT FOGLIGHTS 40-69
Changing halogen bulb 40-69
SIDE DIRECTION INDICATORS 40-70
Bulb replacement 40-70
REAR LIGHTING ASSEMBLIES 40-71
Replacing the bulbs and light unit
(For 33 models) 40-71
Replacing the bulbs and light unit
(For Sport Wagon models) 40-72
NUMBERPLATE LIGHTS 40-73
Replacing bulb and lens
(For 33 models) 40-73
SUPPLEMENTARY BRAKE LIGHT 40-74
Removal - Refitting 40-74

INTERNAL LIGHTING SYSTEM

BULBS 40-76
Bulb table 40-76
FRONT ROOF LIGHT 40-77
Replacing bulb and transparent cover 40-77
REAR ROOF LIGHT - CENTRAL
ROOF LIGHT (For Sport Wagon models) 40-78
Replacing bulb and transparent cover 40-78
GLOVE COMPARTMENT LIGHT 40-79
Replacing bulb and transparent cover 40-79
LUGGAGE COMPARTMENT LIGHT
(For 33 models) 40-80
Replacing bulb and transparent cover 40-80
FUSE AND RELAY BOX LIGHT 40-81
ASHTRAY LIGHT BULB 40-82

EXTERNAL LIGHTING SYSTEM (continued)

FRONT FOGLIGHTS

Changing halogen bulb

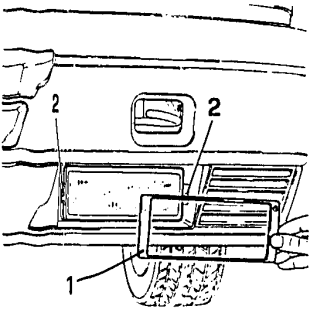

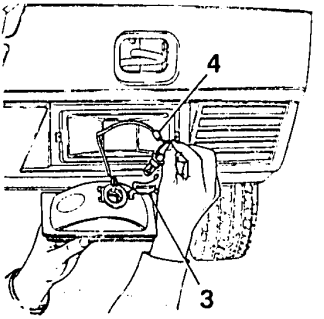

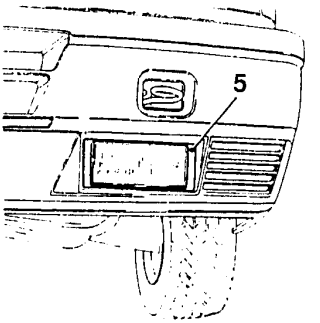

1. Remove the press fitted frame.
2. Loosen the screws with the retaining plate and remove the light assembly.
3. Free the retaining clip from the light.
4. Remove the bulb and replace it by disconnecting the electrical connection.
5. To orientate the beam, adjust the screw through the hole in the frame of the foglight.

Never touch the halogen bulb with your hands. If you do, clean the bulb with methylated spirits before replacing it.

SIDE DIRECTION INDICATORS

Bulb replacement

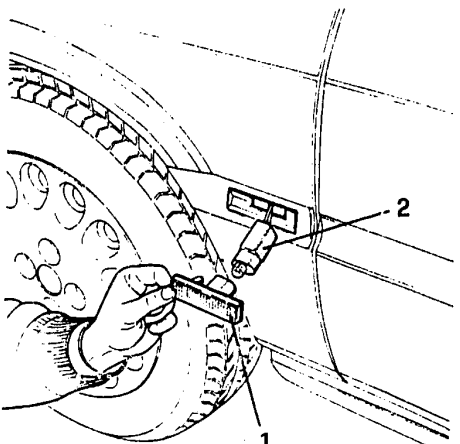

1. Remove the press fitted lens.
2. Withdraw the bulb holder and replace the bulb.

REAR LIGHTING ASSEMBLIES

Replacing the bulbs and light unit (For 33 models)

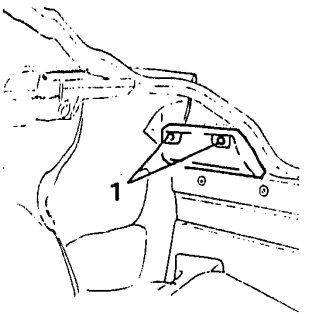

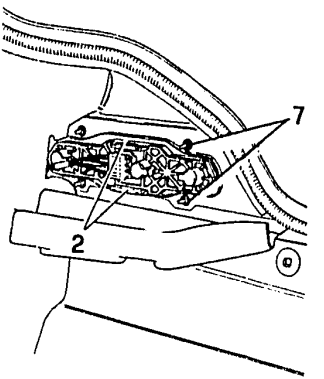

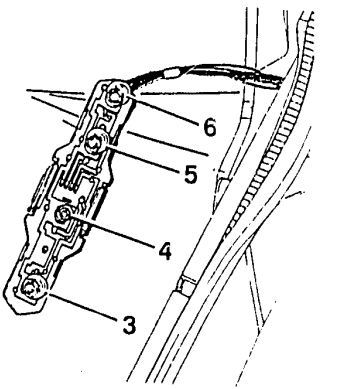

- The bulbs of the rear lights can be reached through the inside of the luggage compartment.

1. Unscrew the four nuts and lower the rear light assemblies protections.
2. Withdraw the bulb holder by pressing on the retaining tabs without disconnecting the electrical connection.
3. Remove the reversing light bulb (right-hand light unit) and the rear foglight (left-hand light unit).
4. Remove the sidelights bulb.
5. Remove the brake lights bulb.
6. Remove the direction indicator bulb.
7. If necessary remove the light housing by unscrewing the 4 bolts and disconnecting the electrical connection.

REAR LIGHTING ASSEMBLIES (continued)

Replacing the bulbs and light unit (For Sport Wagon models)

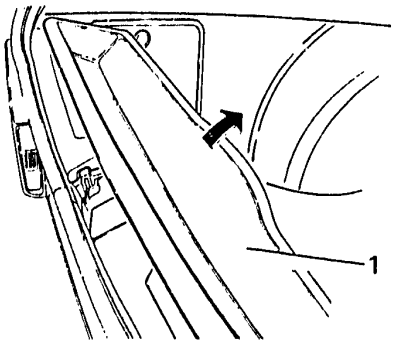

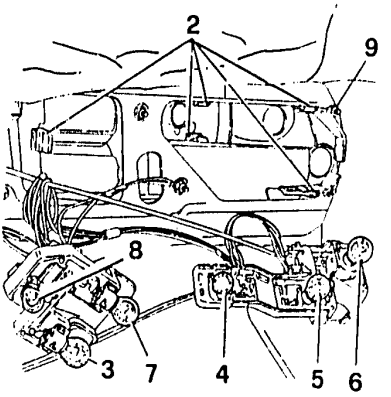

- The rear light bulbs can be reached through the inside of the luggage compartment.

1. Remove the tool compartment located under the carpet in the luggage compartment (only for four-wheel drive models).

- Lift the rear carpet.

2. Withdraw the bulb holder by freeing it from the clips.
3. Remove the rear foglight bulb.
4. Remove the sidelights bulb.
5. Remove the double fillament bulb from the brake light-sidelight.
6. Remove the bulb from the direction indicator.
7. Remove the bulb from the reversing light.
8. Remove the bulb from the numberplate light.
9. If necessary remove the light unit by unscrewing the 5 bolts.

NUMBERPLATE LIGHTS

Replacing bulb and lens (for 33 models)

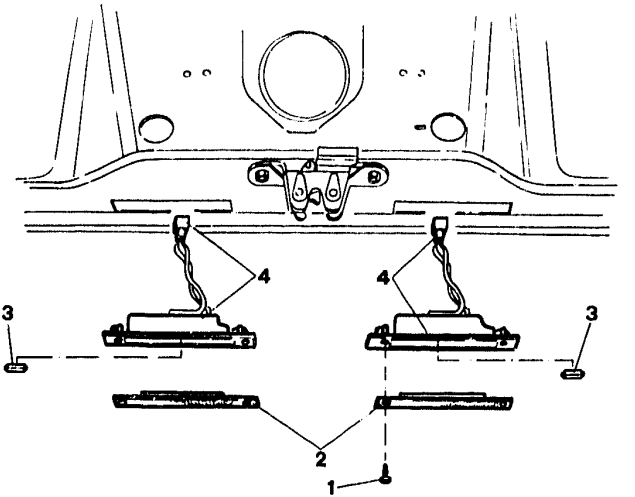

1. Loosen the retaining screws.
2. Remove the lens and replace it if necessary.
3. Replace the press fitted bulb.
4. If necessary replace the entire unit by removing it with a screwdriver and disconnecting the electrical connection.

SUPPLEMENTARY BRAKE LIGHT

Removal - refitting

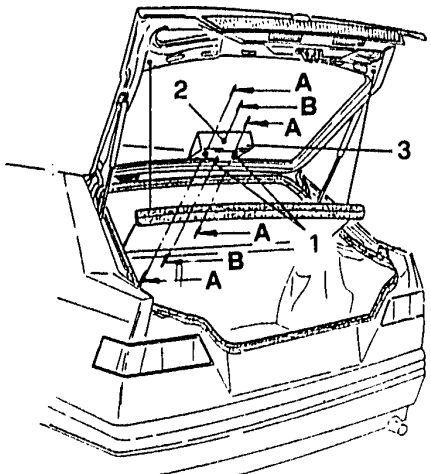

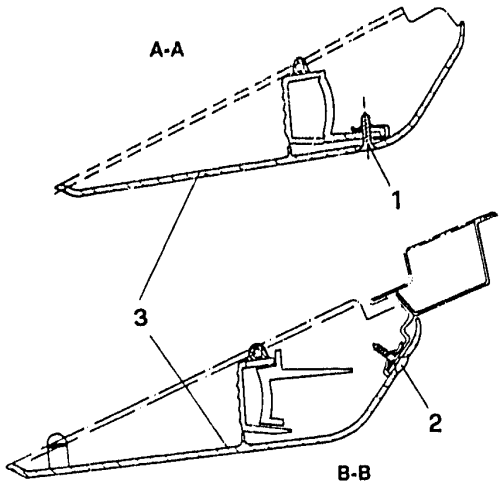

1. Loosen the two lateral screws securing the cover to the supplementary brake light.
2. Loosen the central screw securing the cover to the light unit retaining bracket.
3. Remove the cover from the light unit.
   - Disconnect the electrical connection.

SUPPLEMENTARY BRAKE LIGHT
Removal - refitting (continued)

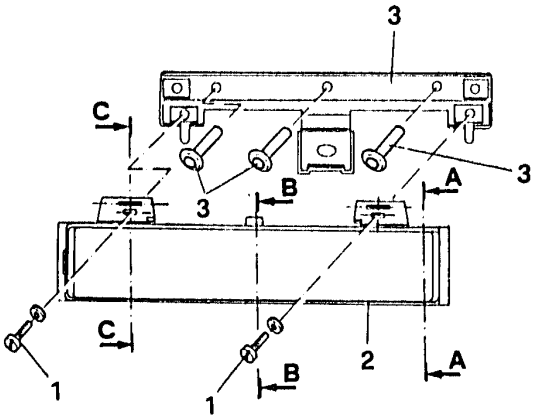

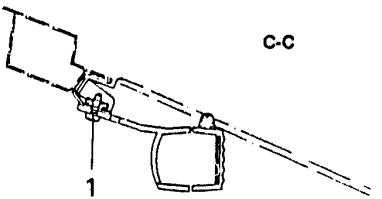

1. Loosen the two screws securing the supplementary brake light unit to the bracket.
2. Withdraw the light unit and gasket and if necessary replace the 2 halogen light bulbs by removing them from the outside.
3. If necessary remove the three rivets securing the light unit bracket to the upper hatch frame and remove the light unit.

⚠ **Apply epoxy primer before inserting new rivets.**

INTERNAL LIGHTING SYSTEM

BULBS

Bulb table

The bulb tables (type and electrical power absorbed) are listed below.

Service	Electrical power (W)	Type
Boot light (*)	4	D
Fusebox light	3	D
Glovebox light	5	C
Front - rear rooflight	10	C
Central rooflight (**)	10	C
Cigar lighter	1.2	D
Instrument panel: lighting and warning lights	1.2	D
Switch lighting	1.2	D
Clock light	1/1.2	D
Lighting for heating-ventilation controls	1.2	D
Lighting for Alfa Control	1.2	D
Ashtray light	1.2	D

(*) Specifico for 33 models (**) Specific for Sport Wagon models

NOTE: See 40-55 for bulb replacement.

FRONT ROOF LIGHT

Replacing bulb and transparent cover.

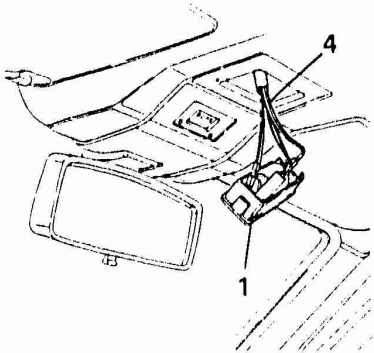

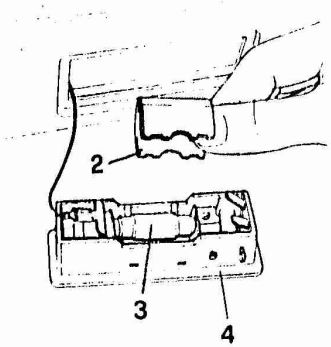

1. Remove the press fitted transparent cover.
2. Remove the metal cover by freeing the retaining tabs.
3. Remove the bulb.
4. If necessary replace the transparent cover after disconnecting the four electrical connections.

REAR ROOF LIGHT - CENTRAL ROOF LIGHT (For Sport Wagon models)
Replacing bulb and transparent cover.

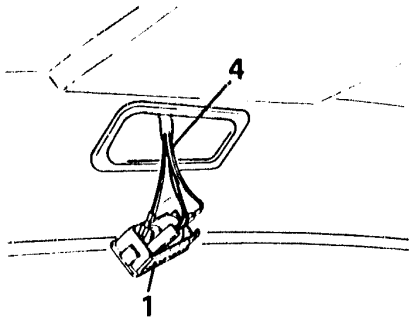

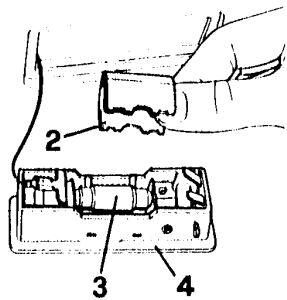

1. Remove the press fitted transparent cover.
2. Remove the metal cover by freeing it from the retaining tabs.
3. Remove the bulb.
4. If necessary replace the transparent cover after disconnecting the four electrical connections.

GLOVE COMPARTMENT LIGHT

Replacing bulb and transparent cover

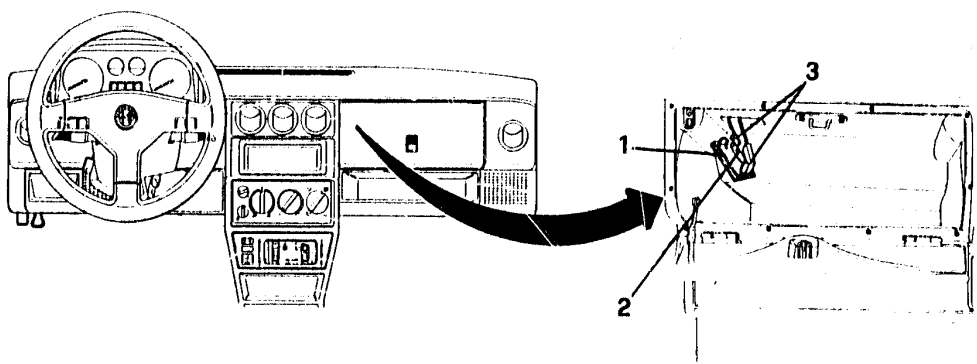

1. Pull off the pressure fitted transparent cover.
2. Replace the bulb.
3. If necessary replace the transparent cover after disconnecting the two electrical connections.

LUGGAGE COMPARTMENT LIGHT (For 33 models)

Replacing bulb and transparent cover

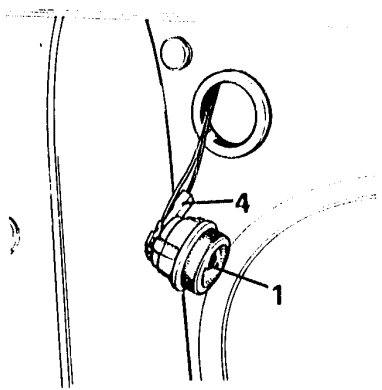

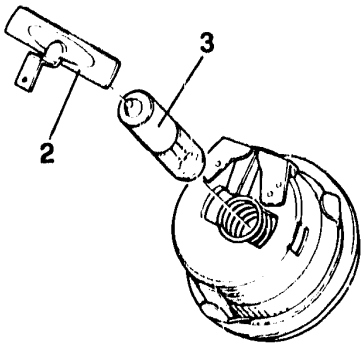

1. Remove the pressure fitted light.
2. Release the tab.
3. Remove and replace the bulb.
4. If necessary replace the transparent cover after disconnecting the two electrical connections.

FUSE AND RELAY BOX LIGHT

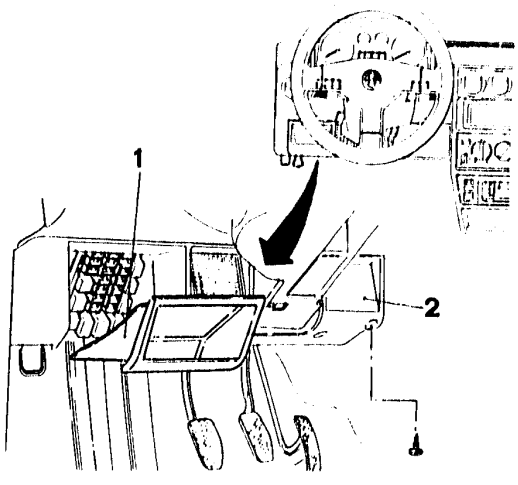

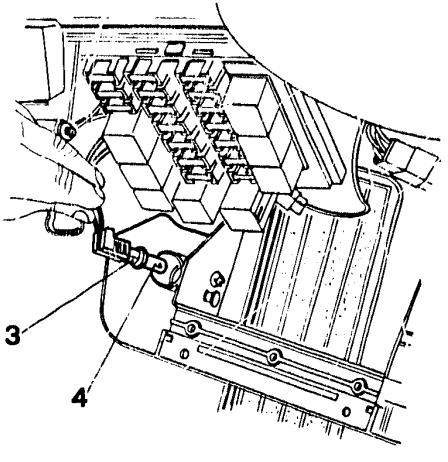

1. Remove the pressure fitted compartment.
2. Remove the trim from under the left-hand side of the dashboard.
3. Withdraw the bulb holder.
4. Replace the bulb.

ASHTRAY LIGHT BULB

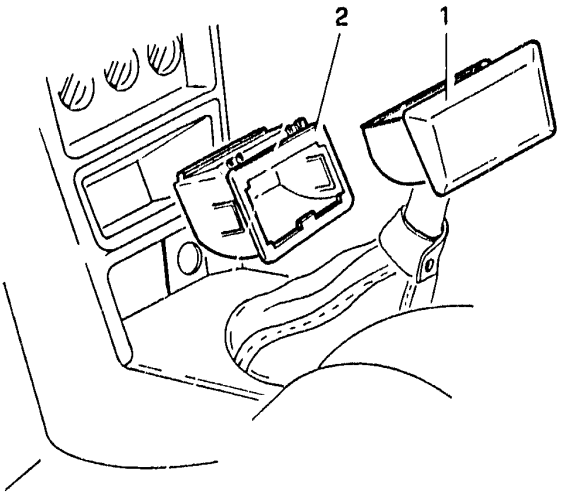

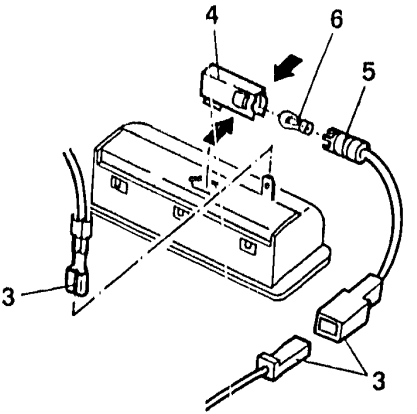

1. Remove the ashtray.
2. Pull off the ashtray support.
3. Disconnect the two electrical connections.
4. Press the sides and withdraw the bulb holder support.
5. Withdraw the bulb holder from the support.
6. Replace the bulb.

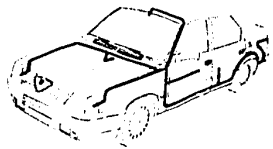

- SENSORS AND SENDERS

SENSORS AND SENDERS

WARNING....40-83
AIR TEMPERATURE SENSOR (NTC)....40-84
Removal - Refitting (Specific for engine with IAW electronic injection)....40-84
Removal - Refitting (Specific for engines with MOTRONIC MP3.1 electronic injection)....40-85
ENGINE COOLANT TEMPERATURE SENSOR (NTC)....40-86
Removal - Refitting (Specific for engine with IAW electronic injection)....40-86
Removal - Refitting (Specific for engines with LE3-JETRONIC, MOTRONIC MP3.1 electronic injection)....40-87
Removal - Refitting (Specific for engine with MOTRONIC ML4.1 electronic injection)....40-88
ENGINE COOLANT TEMPERATURE GAUGE SENDER....40-89
Removal - Refitting (For engines with two carburettors)....40-89
Removal - Refitting (For engine with IAW electronic injection)....40-90
Removal - Refitting (For engines with LE3-JETRONIC, MOTRONIC MP3.1 electronic injection)....40-91
Removal - Refitting (For engine with MOTRONIC ML4.1 electronic injection)....40-92

SENSORS AND SENDERS

WARNING: This paragraph deals with the removal and refitting operations regarding the sensors and senders apart from those listed below which can be found under the relative groups indicated.

- R.P.M. AND TIMING SENSOR — SEE **GR. 01 - GR. 04**
- FUEL LEVEL GAUGE SENSOR — SEE **GR. 04**
- ODOMETER PULSE GENERATOR — SEE **GR. 13**
- ANTIDISENGAGING SENSOR (specific for 4x4 vehicles) — SEE **GR. 13**
- PHONIC WHEEL INDUCTION SENSOR (specific for vehicles with ABS) — SEE **GR. 22**
- SENSORS FOR AIR CONDITIONING SYSTEM — SEE **GR. 80**
- FOUR-WHEEL DRIVE ELECTROMAGNETIC COUPLING (specific for 4x4 vehicles) — SEE **GR. 13**
- ABSOLUTE PRESSURE SENSOR (specific for vehicles with IAW electronic injection) — SEE **GR. 04**
- AIR FLOW METER (specific for vehicles with MOTRONIC ML4.1 electronic injection) — SEE **GR. 04**
- THROTTLE BODY SWITCH (specific for vehicles with LE3-JETRONIC - MOTRONIC ML4.1 electronic injection) — SEE **GR. 04**
- THROTTLE ANGLE POTENTIOMETER (specific for vehicles with IAW - MOTRONIC MP3.1 electronic injection) — SEE **GR. 04**
- IDLE SPEED ADJUSTMENT ACTUATOR (specific for vehicles with IAW - MOTRONIC ML4.1 - MOTRONIC MP3.1 electronic injection) — SEE **GR. 04**
- SUPPLEMENTARY AIR VALVE (specific for vehicles with LE3-JETRONIC electronic injection) — SEE **GR. 04**
- LAMBDA PROBE (specific for non-polluting versions) — SEE **GR. 04**
- EVAPORATION SOLENOID VALVE (specific for non-polluting versions except LE3-JETRONIC) — SEE **GR. 04**

AIR TEMPERATURE SENSOR (NTC)

Removal - refitting (Specific for engines with IAW electronic injection)

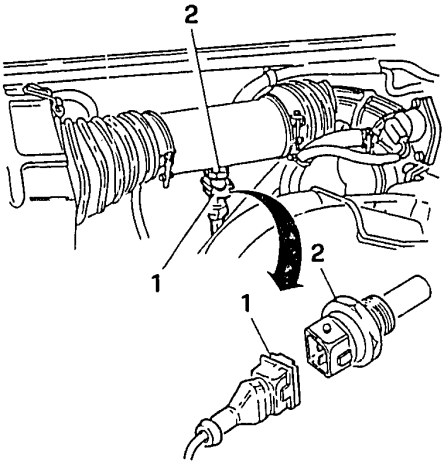

Nominal resistance at 20°C	2.5 kOhm
Temperature range (on site of installation)	-30° - +130°C
Resistance values based on temperature	
-10°C	9 kOhm
0°C	6 kOhm
+10°C	3.8 kOhm
+15°C	3 kOhm
+25°C	2.1 kOhm
+40°C	1.2 kOhm
+80°C	0.33 kOhm

1. Disconnect the electrical connection from the sensor.

2. Unscrew and remove the sensor from its seating on the intake sleeve.
- Check the calibration of the sensor.
If the values differ from those specified, replace the sensor.

AIR TEMPERATURE SENSOR (NTC)

Removal - refitting (Specific for engines with MOTRONIC MP3.1 electronic injection)

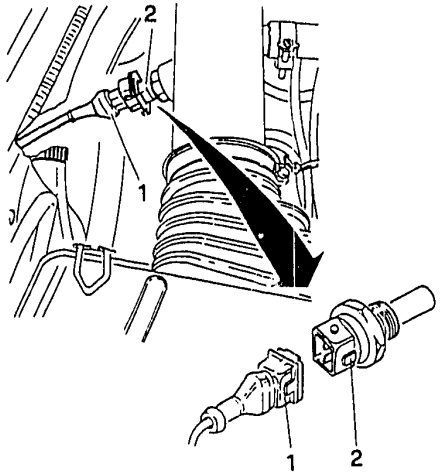

Nominal resistance a 20°C	2.5 kOhm
Temperature range (on site of installation)	-30° - +130°C
Resistance values based on temperature	
-10°C	9 kOhm
0°C	6 kOhm
+10°C	3.8 kOhm
+15°C	3 kOhm
+25°C	2.,1 kOhm
+40°C	1,2 kOhm
+80°C	0,33 kOhm

1. Disconnect the electrical connection from the sensor.
2. Unscrew and remove the sensor from its seating on the intake sleeve.

- Check calibration of sensor. If the values are incorrect replace the sensor.

ENGINE COOLANT TEMPERATURE SENSOR (NTC)

Removal - refitting (Specific for engines with IAW electronic injection)

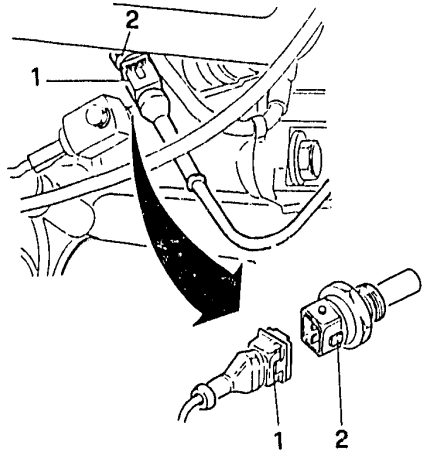

Nominal resistance a 20°C	2.5 kOhm
Temperature range (on site of installation)	-30° - +130°C
Resistance values based on temperature	
-10°C	9 kOhm
0°C	6 kOhm
+10°C	3.8 kOhm
+15°C	3 kOhm
+25°C	2.1 kOhm
+40°C	1.2 kOhm
+80°C	0.33 kOhm

1. Disconnect the electrical connection from the sensor.
2. Unscrew and remove the sensor from its seating on the right-hand cylinder head.

- Prevent spillage by plugging the aperture.
- Check the calibration of the sensor. If the values are incorrect, replace the sensor.

ENGINE COOLANT TEMPERATURE SENSOR (NTC)

Removal - refitting (Specific for engines with LE3 - JETRONIC, MOTRONIC MP3.1 electronic injection)

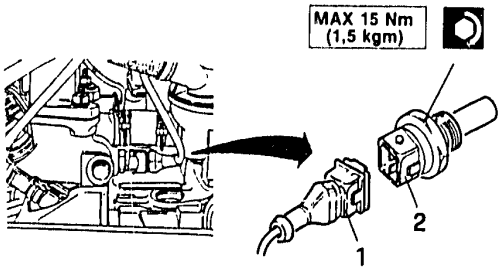

Nominal resistance a 20°C	2.5 kOhm
Temperature range (on site of installation)	-30° - +130°C
Resistance values based on temperature	
-10°C	9 kOhm
0°C	6 kOhm
+10°C	3.8 kOhm
+15°C	3 kOhm
+25°C	2.1 kOhm
+40°C	1.2 kOhm
+80°C	0.33 kOhm

1. Disconnect the electrical connection from the sensor.
2. Unscrew and remove the sensor from its seating on the left-hand supply manifold.

- Prevent spillage by plugging the aperture.
- Check the calibration of the sensor.
  If the values are incorrect, replace the sensor.

ENGINE COOLANT TEMPERATURE SENSOR (NTC)

Removal - Refitting (Specific for engine with MOTRONIC ML4.1 electronic injection)

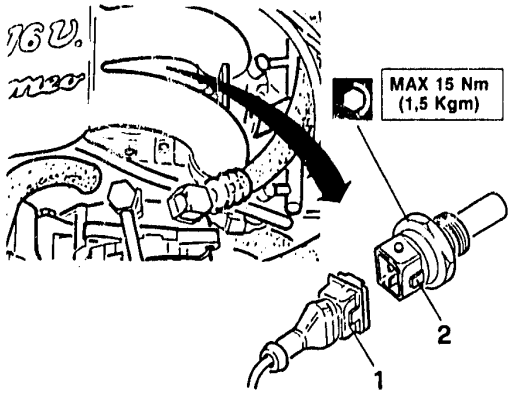

Nominal resistance at 20°C	2.5 kOhm
Temperature range (on seating)	- 30°- 130°C
Resistance values depending on the temperature	
-10°C	9 kOhm
0°C	6 kOhm
+10°C	3.8 kOhm
+15°C	3 kOhm
+25°C	2.1 kOhm
+40°C	1.2 kOhm
+80°C	0,33 kOhm

1. Disconnect the electrical connection from the sensor.
2. Unscrew and remove the sensor from its seating on the left-hand casing.

- Plug the hole to avoid spilling the liquid.
- Check the calibration of the sensor. If the values are incorrect, replace the sensor.

ENGINE COOLANT TEMPERATURE GAUGE SENDER

Removal - Refitting (For engines with two carburettors)

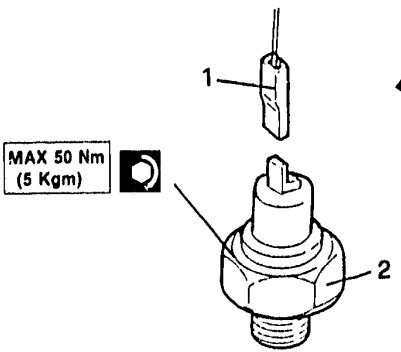

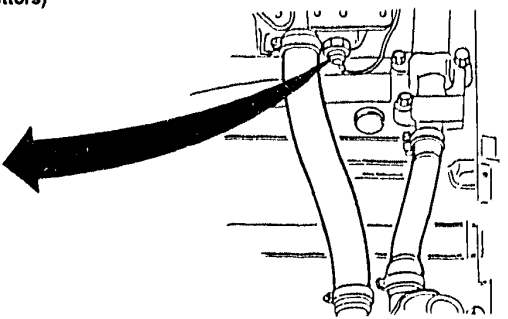

1. Disconnect the electrical connection from the sender.
2. Unscrew and remove the sender from its seating on the inner side of the left-hand intake manifold.

- Plug the hole to avoid spilling the liquid.
- Check sender setting. If the values are incorrect, replace the sender.

Temperature (C°)	Resistance (Ω)	Test liquid
40	900 - 1400	Water
60	470 - 600	Water
80	235 - 300	Water
90	175 - 215	Water
100	135 - 165	Glycerine
120	80 - 100	Glycerine

ENGINE COOLANT TEMPERATURE GAUGE SENDER

Removal - Refitting (For engine with IAW electronic injection)

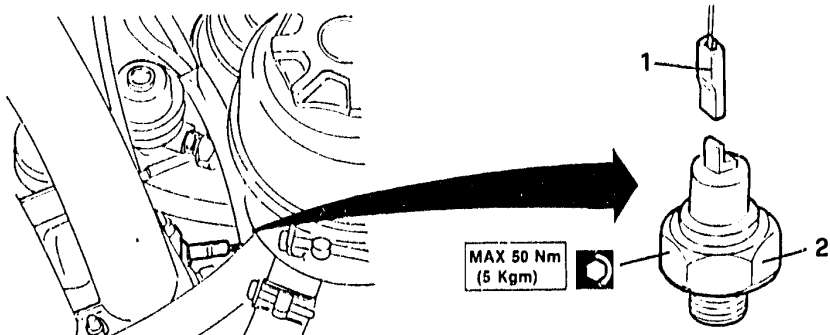

1. Disconnect the electrical connection from the sender.
2. Unscrew and remove the sender from its seating on the left-hand intake manifold.

- Plug the hole to avoid spilling the liquid.
- Check sender setting.
  If the values are incorrect, replace the sender.

Temperature (C°)	Resistance (Ω)	Test liquid
40	900 - 1400	Water
60	470 - 600	Water
80	235 - 300	Water
90	175 - 215	Water
100	135 - 165	Glycerine
120	80 - 100	Glycerine

ENGINE COOLANT TEMPERATURE GAUGE SENDER

Removal - Refitting (For engines with LE3 JETRONIC, MOTRONIC MP3.1 electronic injection)

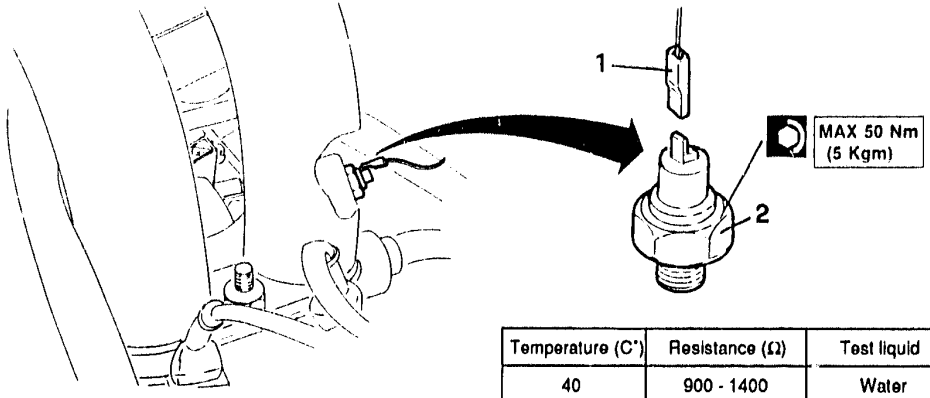

1. Disconnect the electrical connection from the sender.
2. Unscrew and remove the sender from its seating on the rear side of the left-hand manifold.

- Plug the hole to avoid spilling the liquid.
- Check sender setting.
  If the values are incorrect, replace the sender.

Temperature (C°)	Resistance (Ω)	Test liquid
40	900 - 1400	Water
60	470 - 600	Water
80	235 - 300	Water
90	175 - 215	Water
100	135 - 165	Glycerine
120	80 - 100	Glycerine

ENGINE COOLANT TEMPERATURE GAUGE SENDER

Removal - Refitting (For engine with MOTRONIC ML4.1 electronic injection)

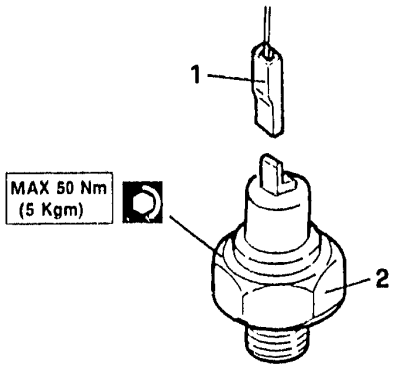

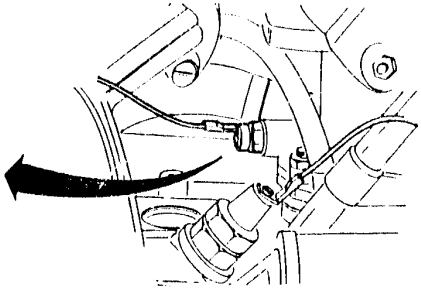

1. Disconnect the electrical connection from the sender.
2. Unscrew and remove the sender from its seating on the right-hand casing in the central position.

- Plug the hole to avoid spilling the fluid.
- Check sender setting.
  If the values are incorrect, replace the sender.

Temperature (C°)	Resistance (Ω)	Test liquid
40	900 - 1400	Water
60	470 - 600	Water
80	235 - 300	Water
90	175 - 215	Water
100	135 - 165	Glycerine
120	80 - 100	Glycerine

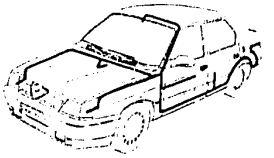

- SENSORS AND SENDERS (continued)

SENSORS AND SENDERS

ENGINE COOLANT TEMPERATURE GAUGE SENDER WITH MAXIMUM TEMPERATURE WARNING LIGHT THERMOCONTACT 40-93
Removal - Refitting (For turbodiesel engine) 40-93
ENGINE COOLING LIQUID MAXIMUM TEMPERATURE WARNING LAMP THERMOCONTACT 40-94
Removal - Refitting (For engines with two carburettors) 40-94
Removal - Refitting (For engine with IAW electronic injection) 40-95
Removal - Refitting (For engines with LE3-JETRONIC, MOTRONIC MP3.1 electronic injection) 40-96
Removal - Refitting (For engine with MOTRONIC ML4.1 electronic injection) 40-97
ENGINE COOLANT TEMPERATURE THERMOCONTACT (For control unit) 40-98
Removal - Refitting (Specific for engines with LE3-JETRONIC electronic injection) 40-98
ENGINE COOLANT LEVEL SENSOR (Specific for models with ALFA CONTROL) 40-99
THERMOCONTACT FOR ENGINE COOLING FAN 40-100
Removal - Refitting (Valid for all versions except turbodiesel) 40-100
Removal - Refitting (Specific for turbodiesel version) 40-101

SENSORS AND SENDERS (Continued)

ENGINE COOLANT TEMPERATURE GAUGE SENDER WITH MAXIMUM TEMPERATURE WARNING LIGHT THERMOCONTACT

Removal - Refitting (For turbodiesel engine)

1. Disconnect the two electrical connections from the sender.
2. Unscrew and remove the sender.
- Plug the hole to avoid spilling the liquid.
- Check the calibration of the thermocontact and of the sender and replace them if the values are incorrect.

Closing temperature	100 ± 3°C
Opening temperature	≥ 90°C

Temperature (C°)	Resistance (Ω)	Test liquid
40	900 - 1400	Water
60	470 - 600	Water
80	235 - 300	Water
90	175 - 215	Water
100	135 - 165	Glycerine
120	80 - 100	Glycerine

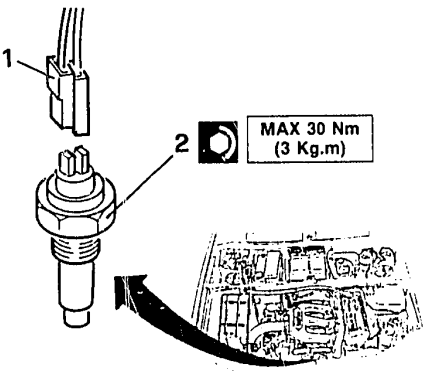

ENGINE COOLING LIQUID MAXIMUM TEMPERATURE WARNING LAMP THERMOCONTACT

Removal - Refitting (For engines with two carburettors)

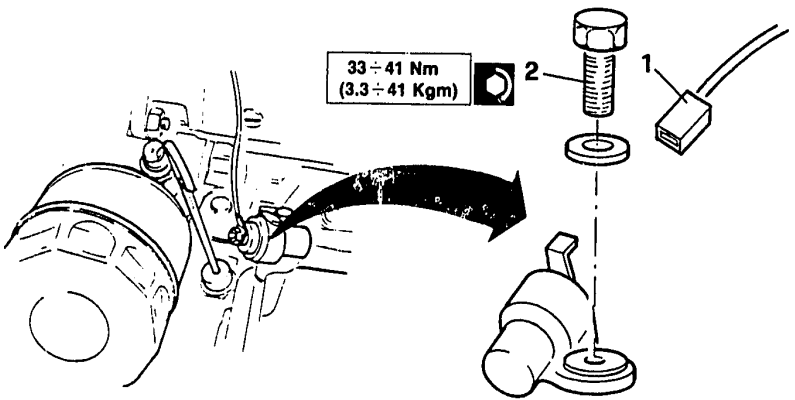

1. Disconnect the electrical connection from the thermocontact.
2. Loosen the screw securing the thermocontact to the right hand head.

- Check the calibration of the thermocontact. If the values are incorrect, replace the thermocontact.

Closing temperature	117 ± 3°C
Opening temperature	100 ± 3°C

ENGINE COOLING LIQUID MAXIMUM TEMPERATURE WARNING LAMP THERMOCONTACT

Removal - Refitting (For engine with IAW electronic injection)

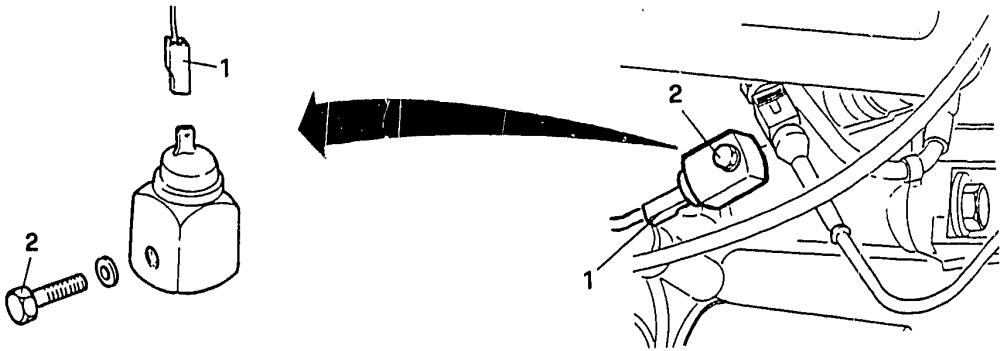

1. Disconnect the electrical connection from the thermocontact.
2. Loosen the screw securing the thermocontact to the right-hand cylinder head.

- Check the calibration of the thermocontact. If the values are incorrect, replace the thermocontact.

Closing temperature	117 ± 3°C
Opening temperature	100 ± 3°C

ENGINE COOLING LIQUID MAXIMUM TEMPERATURE WARNING LAMP THERMOCONTACT

Removal - Refitting (For engines with LE3-JETRONIC, MOTRONIC MP3.1 electronic injection)

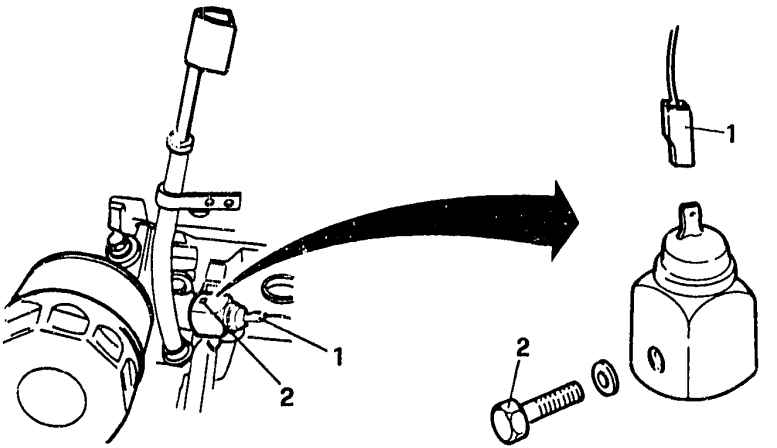

1. Disconnect the electrical connection from the thermocontact.
2. Loosen the screw securing the thermocontact to the head.

- Check the calibration of the thermocontact.
  If the values are incorrect, replace the thermocontact.

Closing temperature	117 ± 3°C
Opening temperature	100 ± 3°C

ENGINE COOLING LIQUID MAXIMUM TEMPERATURE WARNING LAMP THERMOCONTACT

Removal - Refitting (For engine with MOTRONIC ML4.1 electronic injection)

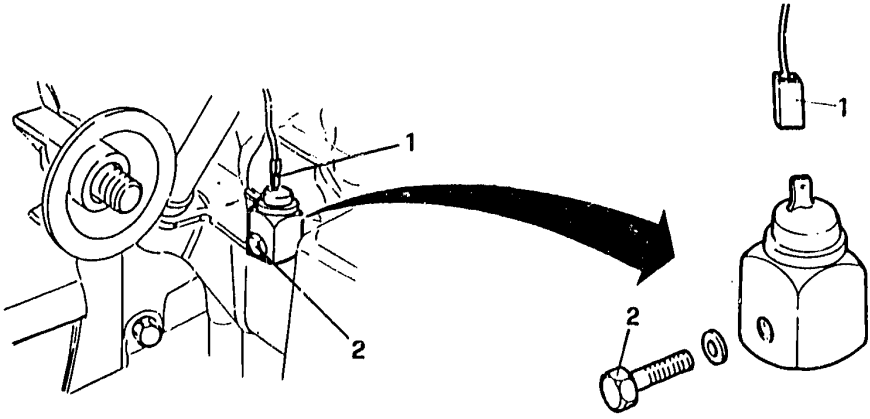

1. Disconnect the electrical connection from the thermocontact.
2. Loosen the screw securing the thermocontact to the right-hand cylinder head.
- Check the calibration of the thermocontact.
  If the values are incorrect, replace the thermocontact.

Closing temperature	117 ± 3°C
Opening temperature	100 ± 3°C

ENGINE COOLANT TEMPERATURE THERMOCONTACT (For control unit)
Removal - refitting (Specific for engines with LE3-JETRONIC electronic injection)

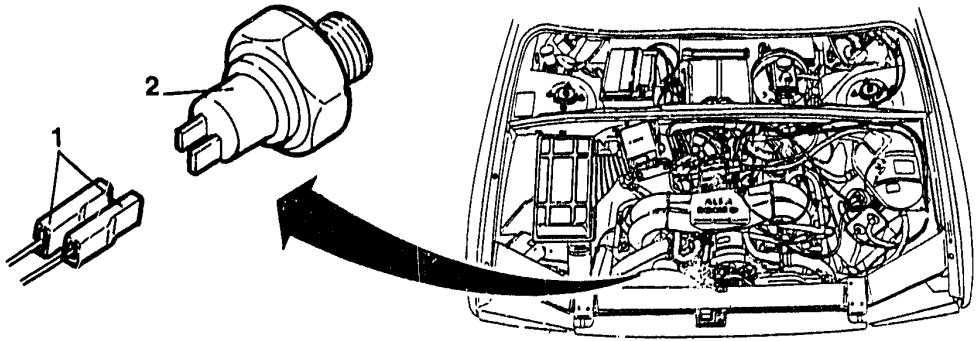

1. Disconnect the two electrical connections.
2. Unscrew and remove the thermocontact from its seating on the front right-hand manifold.

- Prevent spillage by plugging the aperture.
- Check the calibration of the thermocontact. If the values are incorrect, replace the thermocontact.

Closing temperature	46 ± 3°C
Opening temperature	≥ 40°C

ENGINE COOLANT LEVEL SENSOR
(Specific for models with ALFA CONTROL)

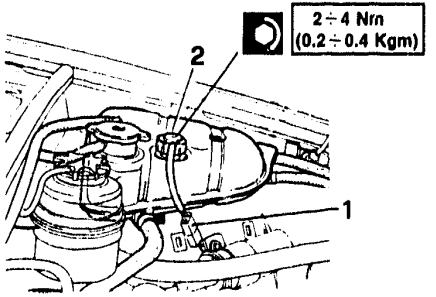

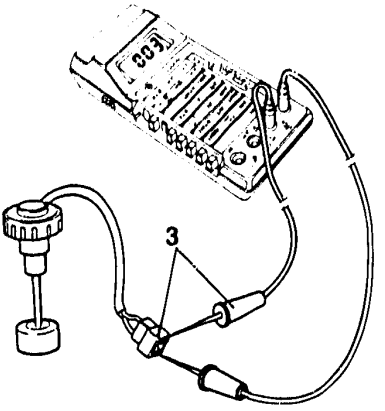

1. Disconnect the electrical connection.
2. Unscrew and remove the sensor from the expansion tank.
3. Ensure that the sensor is working correctly by connecting a tester to the connector. If the values are incorrect, replace the sensor.

Float raised	**R = ∞**
Float lowered	**R = 0 Ω**

THERMOCONTACT FOR ENGINE COOLING FAN

Removal - refitting (valid for all versions except turbodiesel)

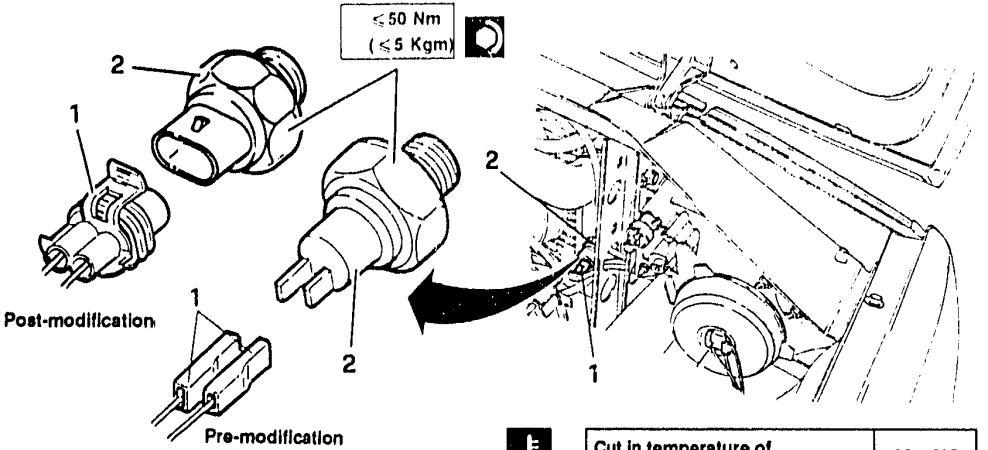

1. Disconnect the electrical connections.
2. Unscrew and remove the thermocontact from the radiator.

- Prevent spillage by plugging the aperture.
- Check the calibration of the thermocontact. Replace the thermocontact if the values are incorrect.

Cut in temperature of electric fan		92 ± 2°C
Cut off temperature of electric fan	Pre-modification	85 ± 2°C
	Post-modification	87 ± 2°C
Contacts normally open		

THERMOCONTACT FOR ENGINE COOLING FAN

Removal - Refitting (Specific for turbodiesel version)

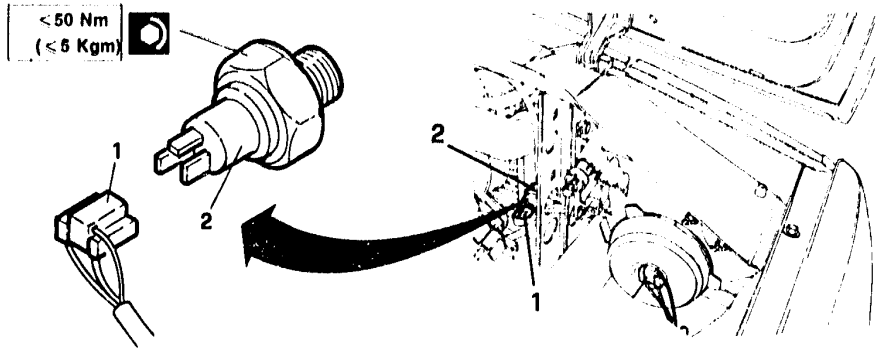

1° circuit	Closing temperature	82 ± 2°C
	Opening temperature	76 ± 2°C
2° circuit	Closing temperature	88 ± 2°C
	Opening temperature	82 ± 2°C
Contacts normally open		

1. Disconnect the electrical connection.
2. Unscrew and remove the thermocontact from the radiator.
- Plug the hole to avoid spilling the liquid.
- Check the calibration of the thermocontact. If the values are incorrect, replace the thermocontact.

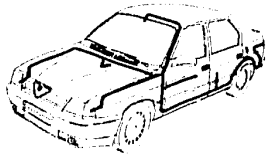

- SENSORS AND SENDERS (continued)

SENSORS AND SENDERS

ENGINE OIL LEVEL SENSOR 40-102
Removal - Refitting (Specific for engines with LE3-JETRONIC electronic injection with ALFA CONTROL) 40-102
Removal - Refitting (Specific for engines with MOTRONIC MP3.1 electronic injection with ALFA CONTROL) 40-103
Removal - Refitting (Specific for engine with MOTRONIC ML4.1 electronic injection with ALFA CONTROL) 40-104
MINIMUM ENGINE OIL PRESSURE PRESSURE SWITCH 40-105
Removal - Refitting (Specific for engines with two carburettors) 40-105
Removal - Refitting (Specific for engine with IAW electronic injection) 40-106
Removal - Refitting (Specific for engines with LE3-JETRONIC electronic injection) 40-107
Removal - Refitting (Specific for engines with MOTRONIC MP3.1 electronic injection) 40-108
Removal - Refitting (Specific for engine with MOTRONIC ML4.1 electronic injection) 40-109
Removal - Refitting (For turbodiesel engine) 40-110
CLUTCH AND BRAKE FLUID MINIMUM LEVEL SENDER 40-111
Removal - Refitting 40-111
OVERBOOST MAXIMUM AIR PRESSURE SENSOR
For turbodiesel engine 40-112
THERMOCONTACT FOR FUEL HEATING PERMIT 40-113
Removal - Refitting (Specific for turbodiesel engine) 40-113

SENSORS AND SENDERS (Continued)

ENGINE OIL LEVEL SENSOR

Removal - Refitting (Specific for engines with LE3-JETRONIC electronic injection with ALFA CONTROL)

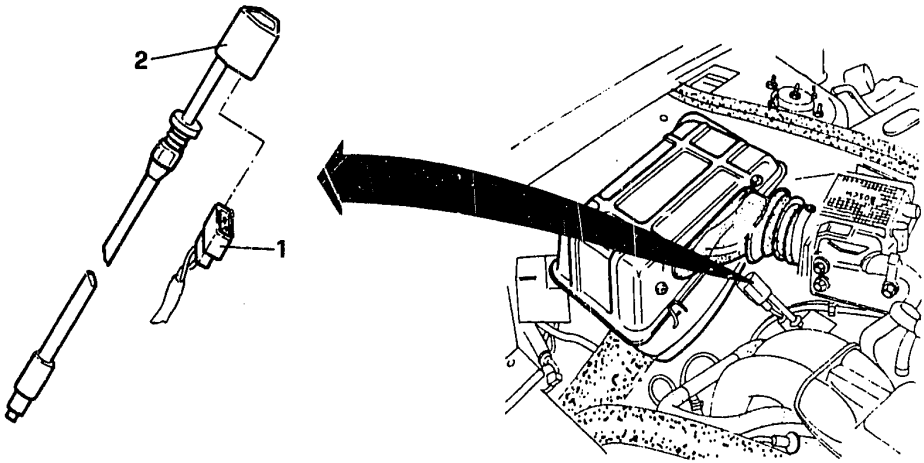

1. Disconnect the electrical connection from the dipstick.
2. Withdraw the dipstick.

ENGINE OIL LEVEL SENSOR

Removal - Refitting (Specific for engines with MOTRONIC MP3.1 electronic injection with ALFA CONTROL)

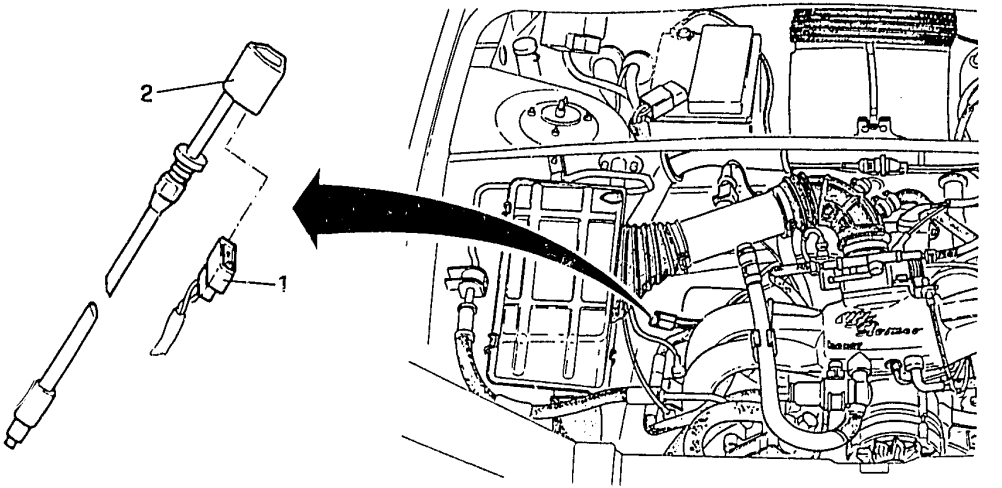

1. Disconnect the electrical connection from the dipstick.
2. Withdraw the dipstick.

ENGINE OIL LEVEL SENSOR

Removal - Refitting (Specific for engine with MOTRONIC ML4.1 electronic injection with ALFA CONTROL)

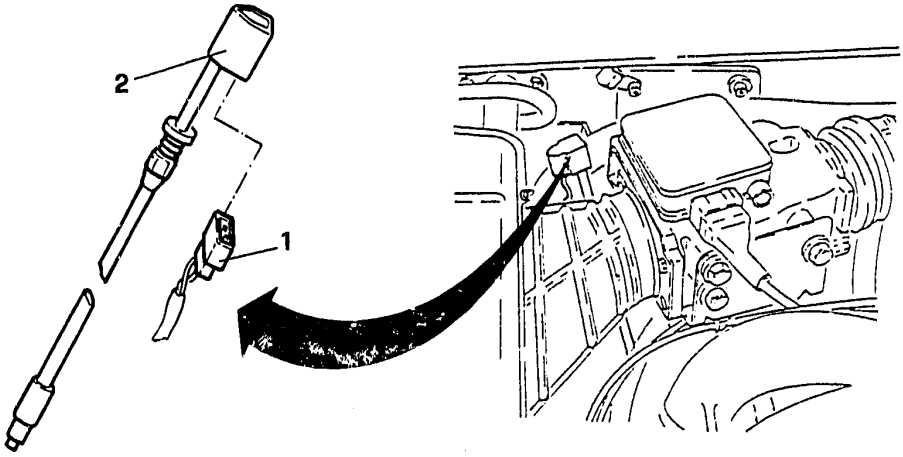

1. Disconnect the electrical connection from the dipstick.
2. Withdraw the dipstick.

MINIMUM ENGINE OIL PRESSURE PRESSURE SWITCH

Removal - refitting (For engines with two carburettors)

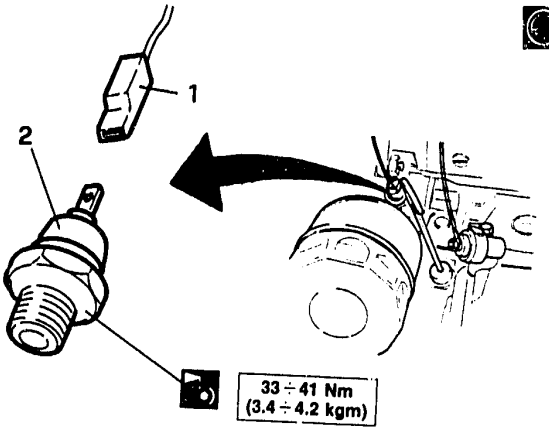

Contact opening pressure (increasing)	0.15 - 0.45 kg/cm^2
Contact closing pressure (decreasing)	0.45 - 0.15 kg/cm^2

1. Disconnect the electrical connection from the pressure switch.
2. Unscrew and remove the pressure switch from the engine rear cover.

- Plug the hole to avoid spilling the engine oil.
- Check the calibration of the pressure switch. If the values are incorrect, replace the pressure switch.

MINIMUM ENGINE OIL PRESSURE PRESSURE SWITCH

Removal - Refitting (Specific for engine with IAW electronic injection)

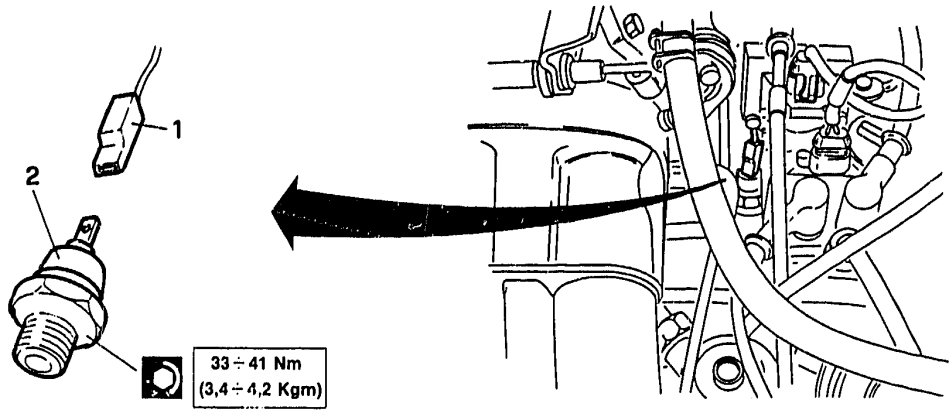

1. Disconnect the electrical connection from the pressure switch.
2. Unscrew and remove the pressure switch from the engine block.

- Plug the hole to avoid spilling the engine oil.
- Check the calibration of the pressure switch. If the values are incorrect, replace the pressure switch.

Contact opening pressure (increasing)	0.15 - 0.45 kg/cm^2
Contact closing pressure (decreasing)	0.45 - 0.15 kg/cm^2

MINIMUM ENGINE OIL PRESSURE PRESSURE SWITCH

Removal - refitting (Specific for engines with LE3-JETRONIC electronic injection)

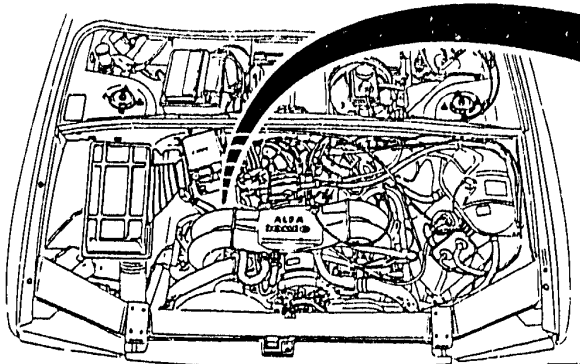

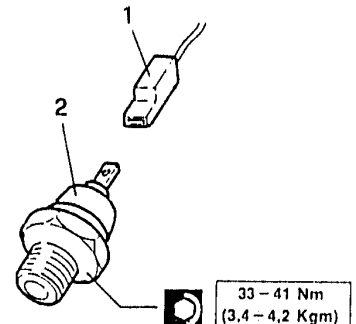

Contacts open at (increasing)	**0.15 - 0.45 kg/cm²**
Contacts close at (decreasing)	**0.45 - 0.15 kg/cm²**

1. Disconnect the electrical connection from the pressure switch.
2. Unscrew and remove the pressure switch from the engine block.

- Plug the aperture to prevent spillage of engine oil.
- Check the calibration of the pressure switch. If the values are incorrect, replace the pressure switch.

MINIMUM ENGINE OIL PRESSURE PRESSURE SWITCH

Removal - refitting (Specific for engines with MOTRONIC MP3.1 electronic injection)

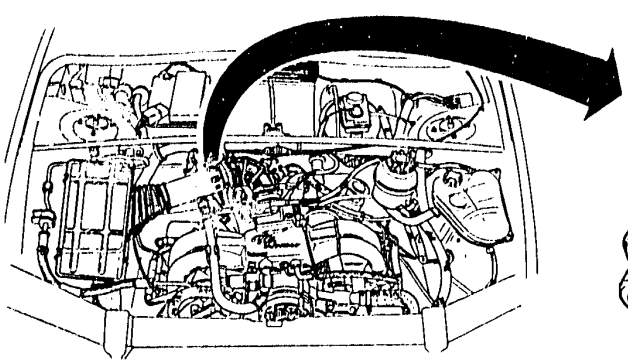

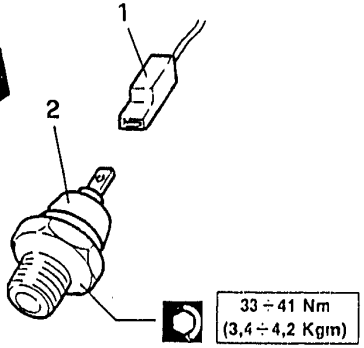

Contacts open at (increasing)	0 [illegible] - 0.45 kg/cm^2
Contacts close at (decreasing)	0.45 - 0.15 kg/cm^2

1. Disconnect the electrical connection from the pressure switch.
2. Unscrew and remove the pressure switch from the engine block.

- Plug the aperture to prevent spillage of engine oil.
- Check the calibration of the pressure switch. If the values are incorrect, replace the pressure switch.

MINIMUM ENGINE OIL PRESSURE PRESSURE SWITCH

Removal - Refitting (Specific for engine with MOTRONIC ML4.1 electronic injection)

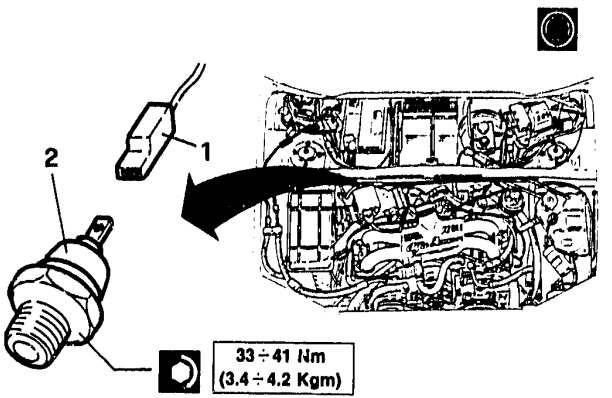

Contact opening pressure (increasing)	0.15 - 0.45 kg/cm^2
Contact closing pressure (decreasing)	0.45 - 0.15 kg/cm^2

1. Disconnect the electrical connection from the pressure switch.
2. Unscrew and remove the pressure switch from the engine block.

- Plug the hole to avoid spilling the engine oil.
- Check the calibration of the pressure switch. If the values are incorrect, replace the pressure switch.

MINIMUM ENGINE OIL PRESSURE PRESSURE SWITCH

Removal - refitting (For turbodiesel engine)

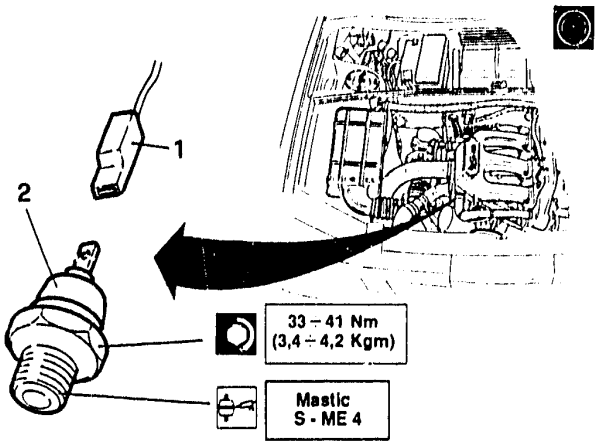

Pressure	bar	kg/cm^2
Calibration	0.147 - 0.441	0.15 - 0.45
Operating permitted	5.88	6
Permitted point with cold starting	9.8	10

1. Disconnect the electrical connection from the pressure switch.
2. Unscrew and remove the pressure switch from the engine block.

- Plug the hole to avoid spilling the engine oil.
- Check the calibration of the pressure switch. If the values are incorrect, replace the pressure switch.

CLUTCH AND BRAKE FLUID MINIMUM LEVEL SENDER

Removal - refitting

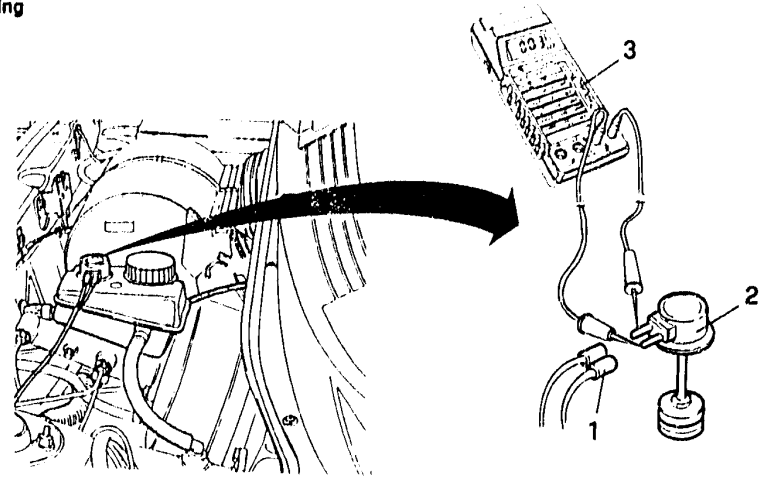

1. Disconnect the two electrical connections from the sender.
2. Unscrew and remove the sender from the brake-clutch fluid reservoir.
3. Check that the sender is working correctly by connecting a tester to the contacts. If the values are incorrect, replace the sender.

Float raised	**R = ∞**
Float lowered	**R = 0 Ω**

OVERBOOST MAXIMUM AIR PRESSURE SENSOR
(For turbodiesel engine)

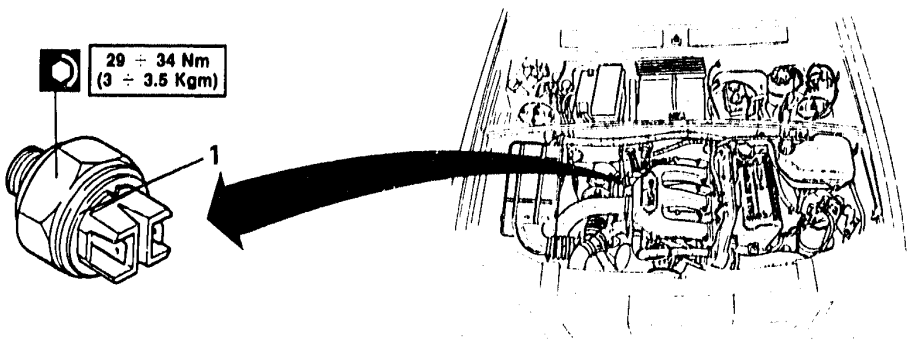

- Disconnect the two connections on the sensor.
1. Unscrew and remove the sensor from the intake manifold.
- Check the calibration of the sensore. If the values are incorrect, replace the sensor.

Contact closure pressure	**1.2 - 1.5 bar**
Maximum intervention pressure	**20 bar**

THERMOCONTACT FOR FUEL HEATING PERMIT

Removal - refitting (Specific for turbodiesel engine)

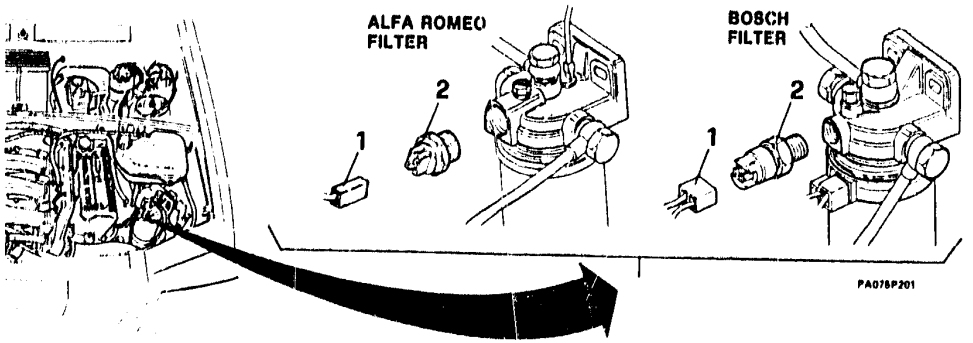

1. Disconnect the electrical connection.
2. Unscrew and remove the thermocontact from the diesel filter.

Plug the hole to avoid spilling the diesel fuel.

- Check the calibration of the thermocontact. If the values are incorrect, replace the thermocontact.

	Thermocontact on filter ALFA ROMEO	Thermocontact on filter Bosch
Cut-in temperature	2°C	0°C
Cut-of temperature	6°C	8°C

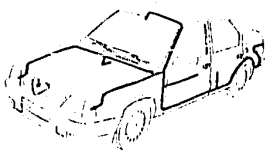

- WINDSCREEN WASHER-WIPERS AND HEADLIGHT WASHERS
- REAR WINDSCREEN WASHER/WIPER
- ELECTRICAL ACCESSORIES

WINDSCREEN WASHER-WIPERS AND HEADLIGHT WASHERS

WINDSCREEN WIPERS 40-114
Assembly 40-114
Removal - Refitting 40-115
WINDSCREEN WASHERS AND HEADLIGHT WASHERS 40-116
Removal - Refitting reservoir 40-116

REAR WINDSCREEN WASHER/WIPER

REAR WINDSCREEN WIPER 40-119
Removal - Refitting 40-119
REAR WINDSCREEN WASHER (Specific for 4x2 versions) 40-120
Assembly 40-120
Removal - Refitting 40-121
REAR WINDSCREEN WASHER (Specific for 4x4 versions) 40-122
Assembly 40-122
Removal - Refitting 40-123

ELECTRICAL ACCESSORIES

POWER WINDOWS 40-124
Access to power window motor 40-124
DOOR LOCKS 40-125
Access to front door motors 40-125
Access to rear door motors 40-126
HORNS 40-127
Removal - Refitting 40-127
CIGAR LIGHTER 40-128
Removal - Refitting 40-128
CLOCK 40-129
Removal - Refitting 40-129

WINDSCREEN WASHER-WIPERS AND HEADLIGHT WASHERS

WINDSCREEN WIPERS

Assembly

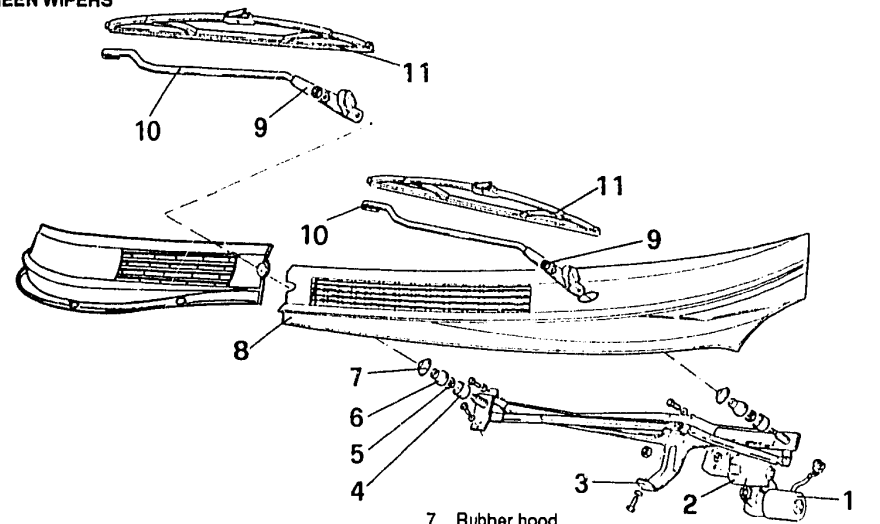

1 Motor
2 Protection for motor
3 linkage
4 Spacer
5 Nut
6 Bushing
7 Rubber hood
8 Air intake grille
9 Nut
10 Wiper arm
11 Blade

WINDSCREEN WIPERS (continued)

Removal - refitting

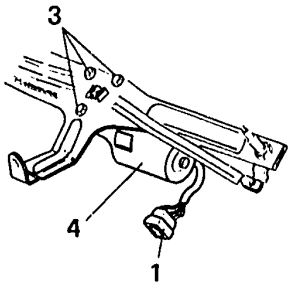

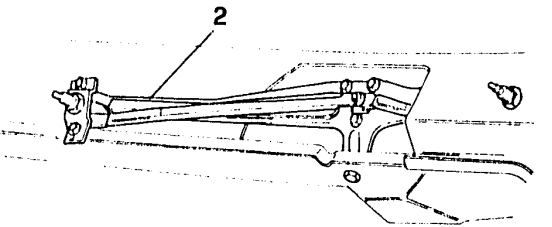

1. Disconnect the electrical connection from the motor.
- Remove the blades from the wiper arms.
- Remove the wiper arms.
- Remove the air intake grille (see GROUP. 75).
2. Unscrew the three screws and remove the linkage assembly from the body.
3. On a bench loosen the three screws securing the linkage to the motor and the nut securing the shaft of the motor to the linkage.
4. Remove the motor.

WINDSCREEN WASHERS AND HEADLIGHT WASHERS

Removal - refitting reservoir

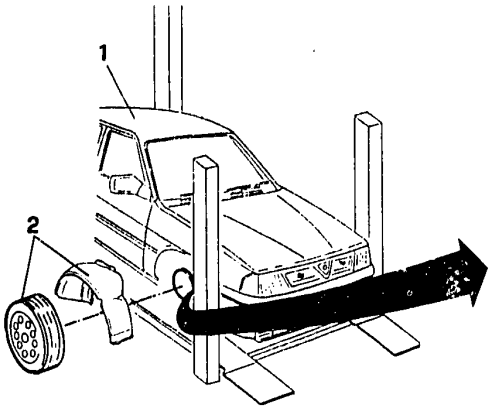

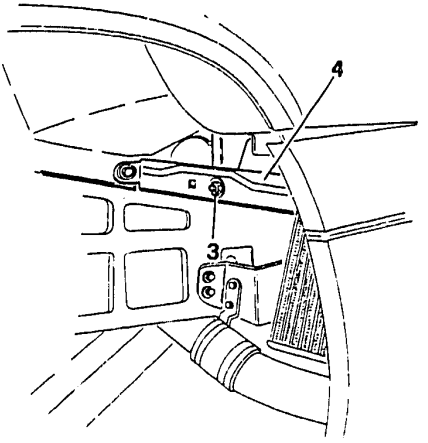

1. Place the vehicle on a lift.
2. Remove the wheel and the front right-hand gravel guard (see GROUP. 75).

- Drain off the liquid from the windscreen-headlight washer reservoir.

3. Loosen the screw securing the reservoir support bracket.
4. Remove the bumper-wing spacer.

⇩

WINDSCREEN WASHER - HEADLIGHT WASHER

Removal - refitting reservoir (continued)

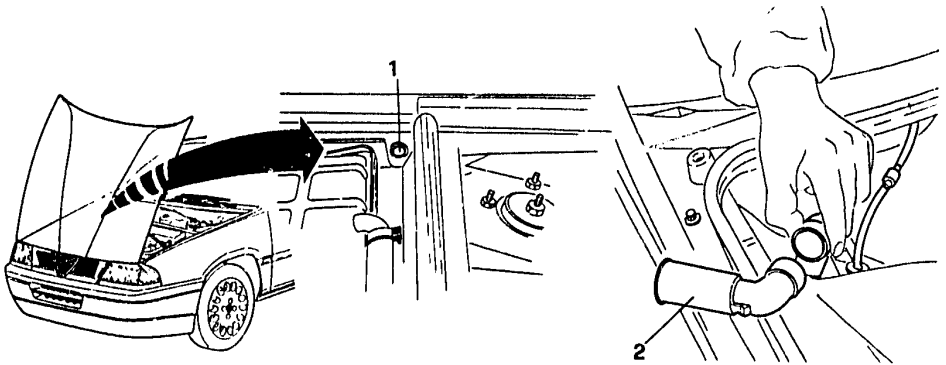

1. Loosen the screw securing the windscreen-headlight washer reservoir.
2. Remove the elbow from the filler neck.

WINDSCREEN WASHER - HEADLIGHT WASHER

Removal - refitting reservoir (continued)

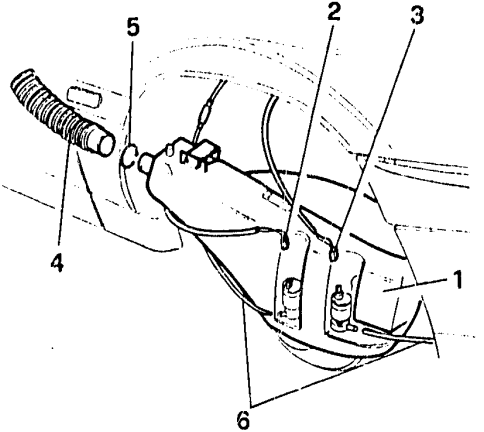

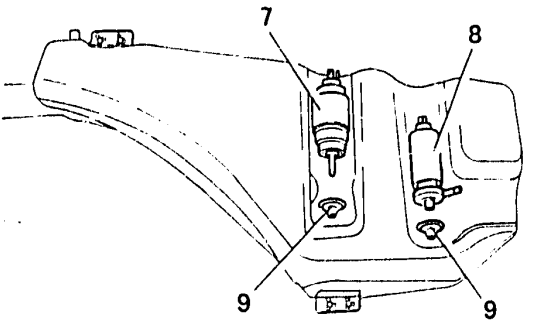

1. Withdraw the reservoir.
2. Disconnect the electrical connection from the windscreen washer pump.
3. Disconnect the electrical connection from the headlight washer pump.
4. Remove the hose clamp and withdraw the hose.
5. Remove the O-ring.
6. Disconnect the two fluid delivery hoses from the pumps.
7. Remove the windscreen washer pump.
8. Remove the headlight washer pump.
9. Remove the grommets.

WINDSCREEN WASHER/WIPER

REAR WINDSCREEN WIPER

Removal - refitting

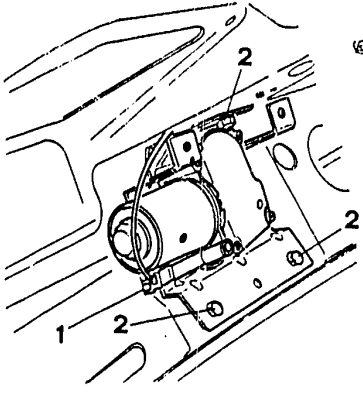

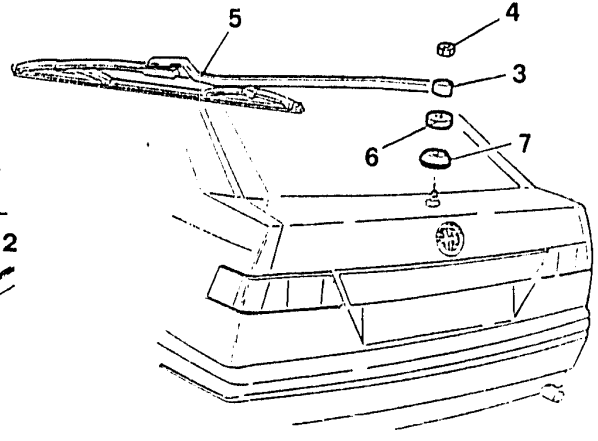

- Pull off the three plastic pins and remove the protective covering.
1. Disconnect the electrical connection.
2. Unscrew the three screws securing the rear wiper motor.
3. Lift the cap of the wiper arm.
4. Unscrew the nut.
5. Remove the wiper arm.
6. Remove the cover.
7. Remove the grommet.

REAR WINDSCREEN WASHER (Specific for 4x2 versions)

Assembly

1 Liquid filler hose
2 Side covering
3 Reservoir
4 Rear windscreen washer electric pump
5 Electrical connection for electric pump
6 Screws securing the reservoir to the body
7 Water delivery hose
8 Spray
9 Check-valve

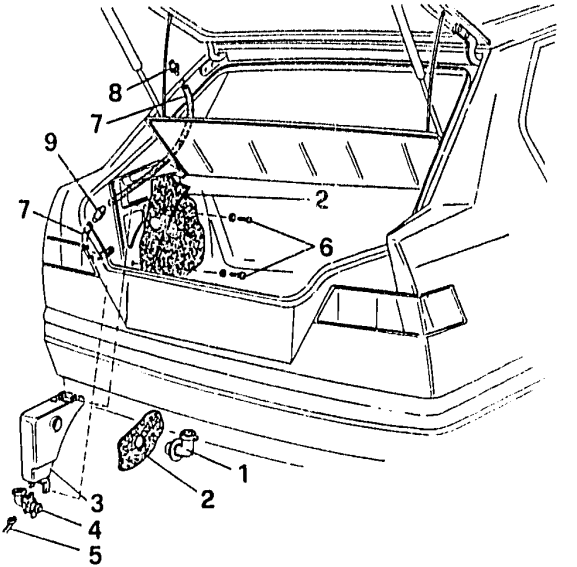

REAR WINDSCREEN WASHER (Specific for 4x2 versions) (Continued)
Removal - Refitting

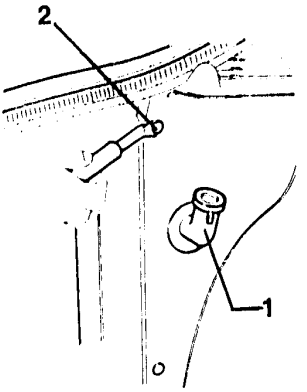

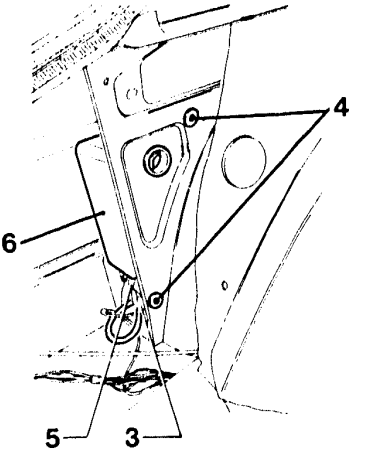

- Empty the reservoir.
1. Remove the press fitted liquid filler hose.
2. Using a suitable tool remove the two plastic pins securing the side covering to the body.
3. Disconnect the electrical connection from the electric pump located on the reservoir.
4. Loosen the two screws securing the reservoir to the body.
5. Remove the delivery hose from the electric pump.
6. Remove the reservoir.
- Remove the electric pump.

REAR WINDSCREEN WASHER (Specific for 4x4 versions)

Assembly

1 Reservoir
2 Cap
3 Rear windscreen washer electric pump.
4 Electrical connection for electric pump
5 Water delivery hose
6 Check valve
7 Spray

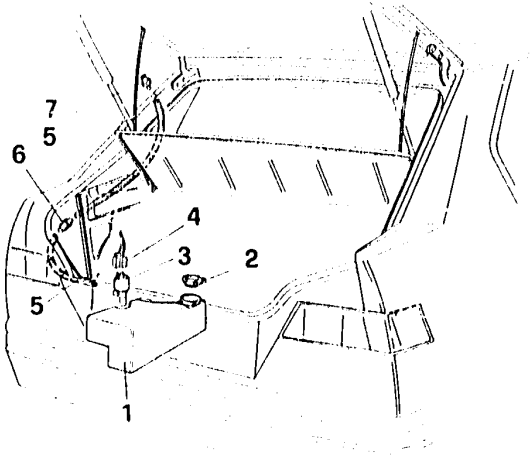

REAR WINDSCREEN WASHER (Specific for 4x4 versions) (Continued)
Removal - Refitting

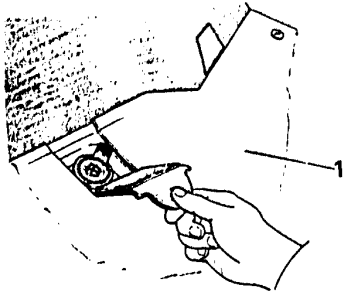

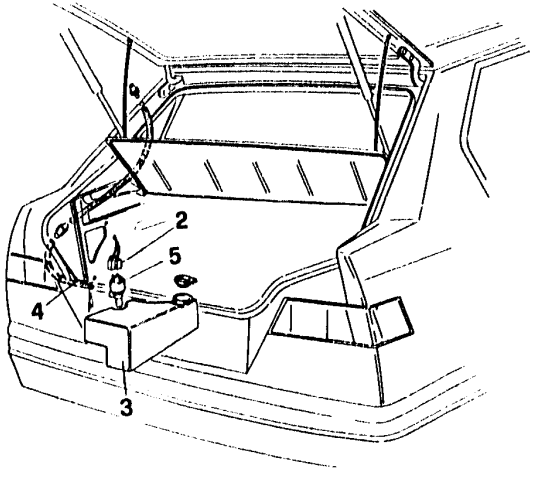

- Empty the reservoir.
1. Raise the left-hand covering just enough to permit access to the reservoir.
2. Disconnect the electrical connection from the electric pump located on the reservoir.
3. Remove the press fitted reservoir from the floor of the luggage compartment.
4. Remove the delivery hose from the electric pump.
5. Remove the electric pump.

ELECTRICAL ACCESSORIES

POWER WINDOWS

Access to power window motor

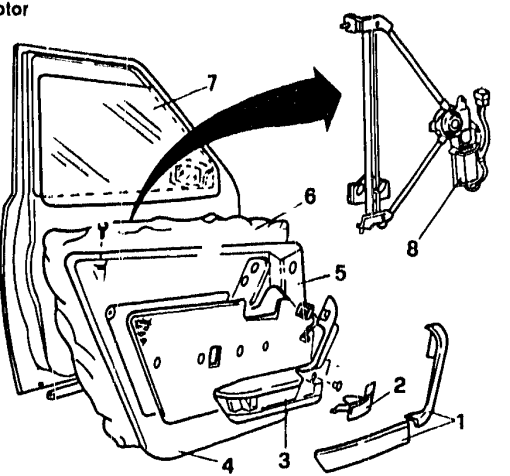

1. Remove the two trimming panels.
2. Remove the inside door handle.
3. Remove the armrest.
4. Remove the trimming panel.
5. Remove the door panel.
6. Remove the cellophane.
7. Remove the window.
8. Remove the window raising device in order to reach the motor.

DOOR LOCKS

Access to front door motors

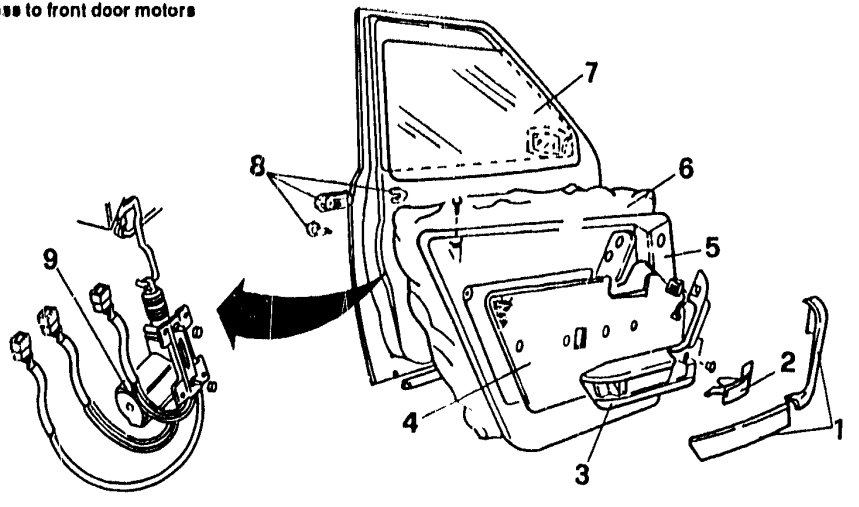

1. Remove the two trimming panels.
2. Remove the inside door handle.
3. Remove the armrest.
4. Remove the trimming panel.
5. Remove the door panel.
6. Remove the cellophane.
7. Remove the window.
8. Remove the handle, plate and lock block.
9. Remove the lock clock in order to gain access to the motor.

DOOR LOCKS (continued)

Access to rear door motors

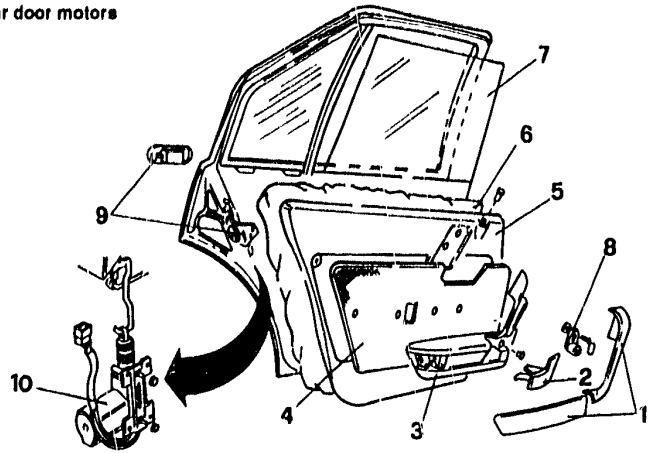

1. Remove the two trimming panels
2. Remove the inside door handle.
3. Remove the armrest.
4. Remove the trimming panel.
5. Remove the door panel.
6. Remove the cellophane.
7. Remove the window.
8. Remove the window raising handle.
9. Remove the outer handle and the plate.
10. Remove the lock block in order to gain access to the motor.

HORNS

Removal - refitting

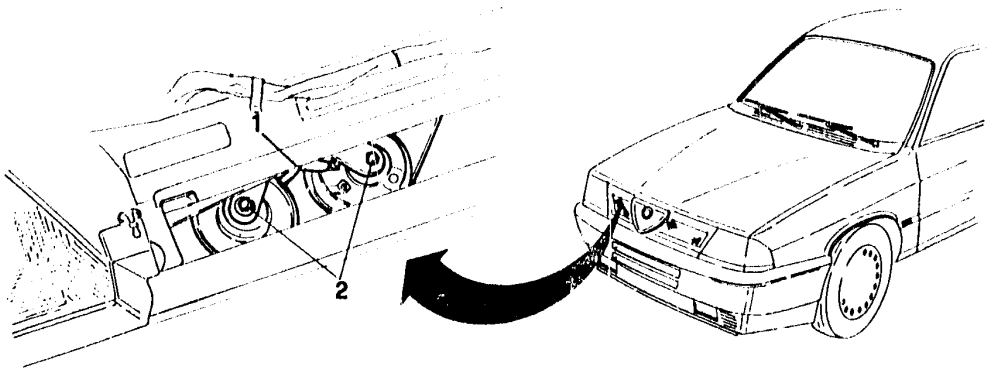

- Remove the grille (see GROUP. 75).
1. Disconnect the two electrical connections from the horns.
2. Unscrew the nuts and remove the horns.

CIGAR LIGHTER
Removal - refitting

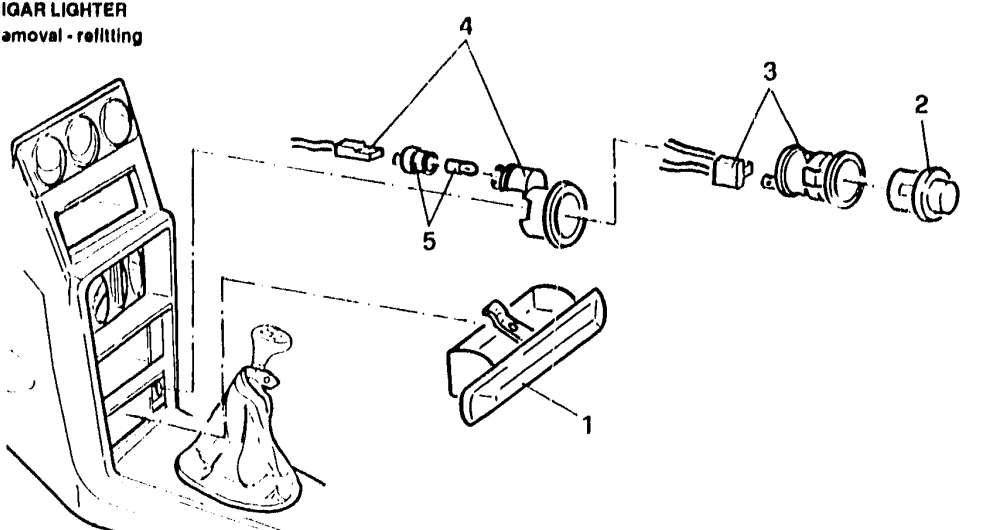

1. Remove the ashtray.
2. Remove the cigar lighter.
3. Using a suitable tool, rotate and remove the cigar lighter shoe and ensure that the electrical connection of the cigar lighter is disconnected.
4. Remove the cigar lighter shoe and ensure that the lighting connection is disconnected.
5. Remove the bulb holder pressure fitted to the ring.

CLOCK

Removal - refitting

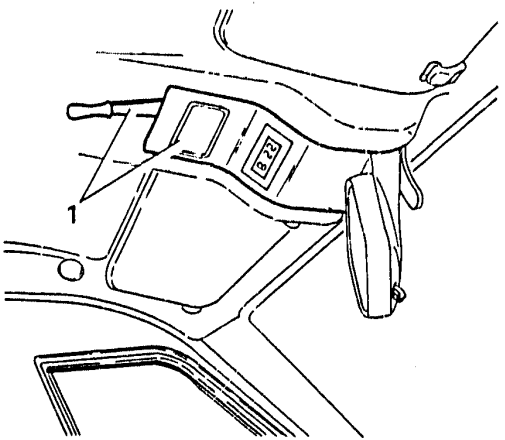

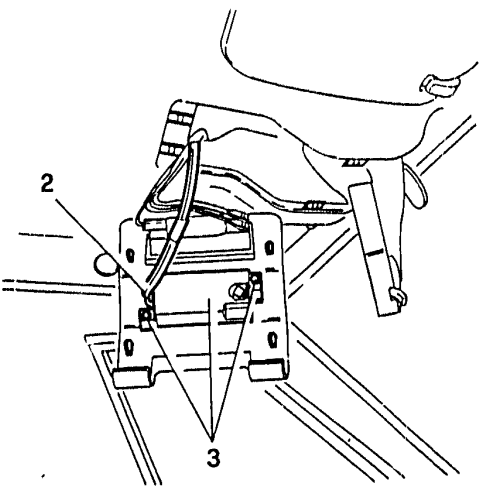

1. Pull off the entire frame and light assembly from the roof panel.
2. Disconnect the electrical connection from the clock.
3. Loosen the two screws and remove the clock.

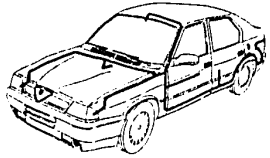

- ELECTRICAL ACCESSORIES (continued)
- SWITCHES

ELECTRICAL ACCESSORIES

BRANCH TERMINAL BOARD 40-130
Removal - Refitting 40-130
RESISTOR (DIM-DIP) 40-131
Removal - Refitting 40-131
DASHBOARD LIGHTING DIMMER RHEOSTAT 40-132
Removal - Refitting 40-132

SWITCHES

POWER WINDOW SWITCHES 40-133
Removal - Refitting 40-133
SWITCHES ON DASHBOARD (Pre-modification) 40-134
Removal - Refitting 40-134
SWITCHES ON DASHBOARD (Post-modification) 40-136
Location 40-136
Removal - Refitting 40-137
FOUR-WHEEL DRIVE CONTROL BUTTON 40-139
Removal - Refitting 40-139
HEADLIGHT ALIGNMENT SWITCH 40-140
Removal - Refitting 40-140
BRAKE LIGHT SWITCH 40-141
Removal - Refitting 40-141
SUPPLEMENTARY BRAKE LIGHT SWITCH 40-142
Removal - Refitting (For 4x4 models) 40-142
REVERSING LIGHTS SWITCH 40-143
Removal - Refitting 40-143
HANDBRAKE WARNING LAMP SWITCH 40-144
Removal - Refitting 40-144
PASSENGER COMPARTMENT LIGHTING SWITCH ON DOOR PILLAR 40-145
Removal - Refitting 40-145

ELECTRICAL ACCESSORIES (continued)

BRANCH TERMINAL BOARD

Removal - refitting

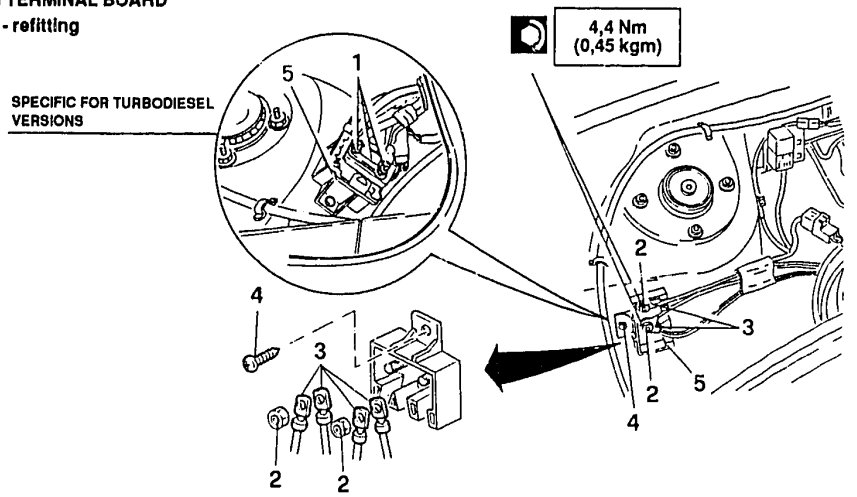

1. Unscrew the two outer nuts and remove the glowplug timer fuse and relative connectors (for turbodiesel models).
- Remove the press fitted cover from the branch terminal board.
2. Unscrew the two nuts.
3. Withdraw the power supply connectors.
4. Loosen the screw securing the branch terminal board to the body.
5. Remove the branch terminal board.

RESISTOR (DIM DIP)
Removal - Refitting

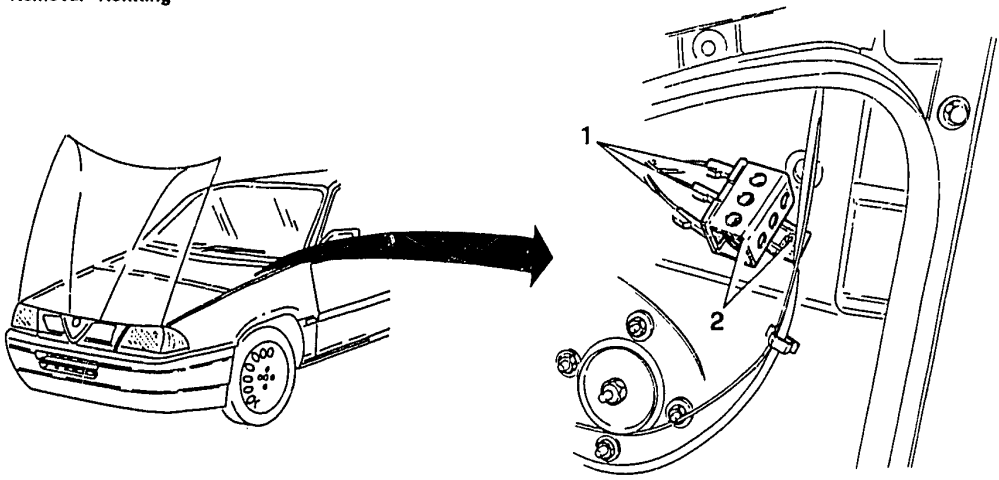

1. Disconnect the three electrical connections from the resistor.
2. Loosen the screw and remove the resistor.

DASHBOARD LIGHTING DIMMER RHEOSTAT

Removal - Refitting

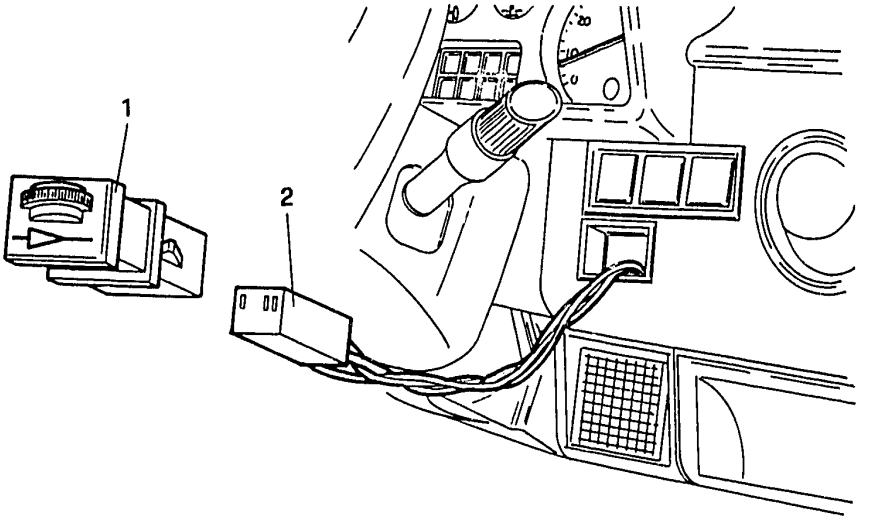

1. Pull off the rheostat and remove it from its seating together with the electrical connection.
2. Disconnect the electrical connection from the rheostat and remove the rheostat.

SWITCHES

POWER WINDOW SWITCHES

Removal - refitting

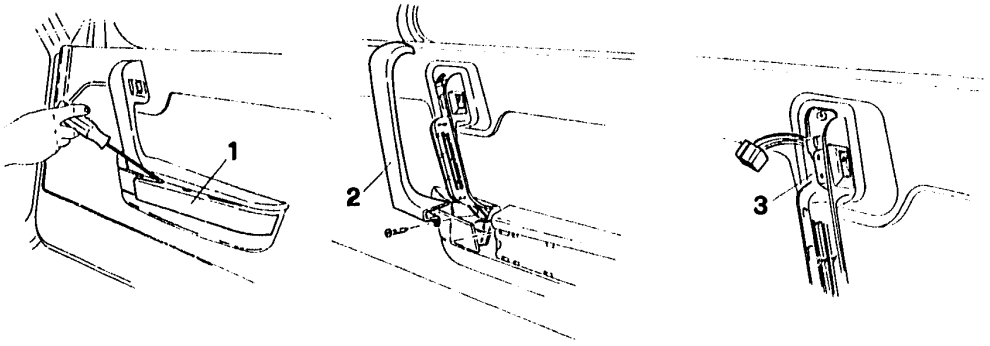

1. Remove the armrest moulding.
2. Remove the grip moulding by loosening the screw.
3. Disconnect the electrical connection and remove the electric power windows control switch.

SWITCHES ON DASHBOARD (pre-modification)

Removal - refitting

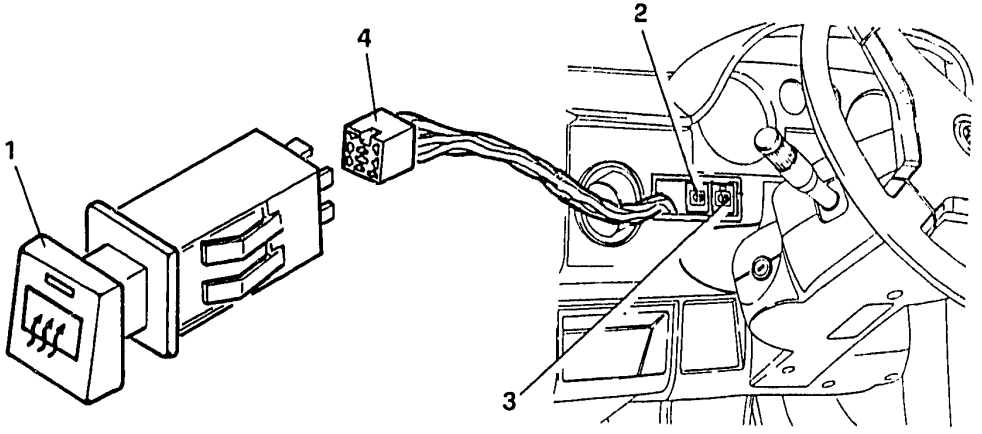

1. Pull the heated rear windscreen control switch from its seating.
2. Pull off the rear foglights control switch.
3. Pull off the front foglight control switch.
4. Disconnect the electrical connections from the switches.

SWITCHES ON DASHBOARD (pre-modification)
Removal - Refitting (Continued)

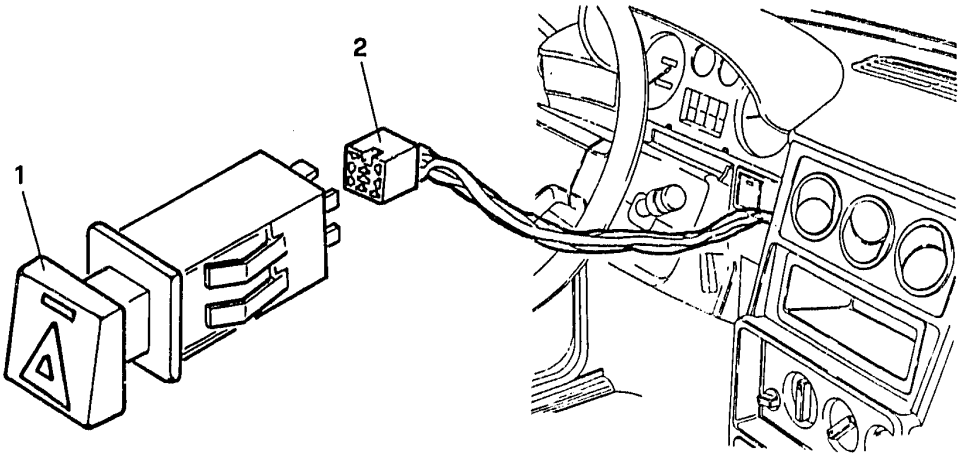

1. Pull the hazard warning light control switch from its seating.
2. Disconnect the electrical connection from the switch.

SWITCHES ON DASHBOARD (post-modification)

Location

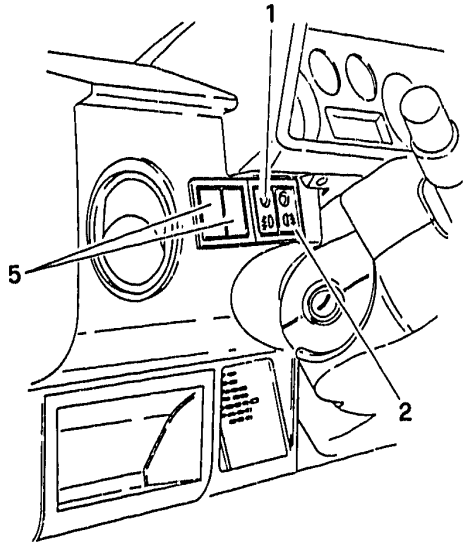

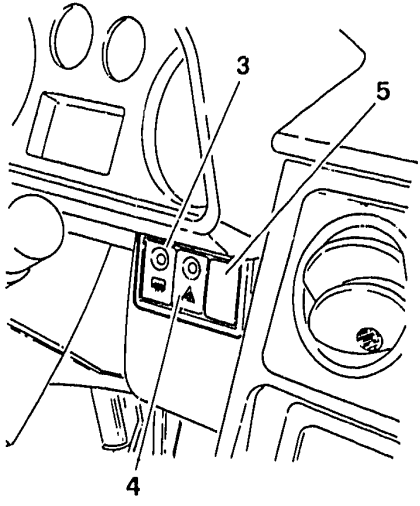

1. Front foglights control switch.
2. Rear foglights control switch.
3. Heated rear window control switch.
4. Hazard warning lights control switch.
5. Provision for:

SWITCHES ON DASHBOARD (post-modification) (continued)
Removal - refitting

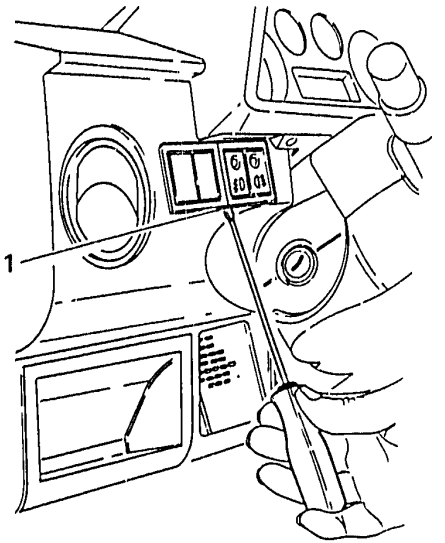

1. Pull the switch group from its seating on the dashboard.

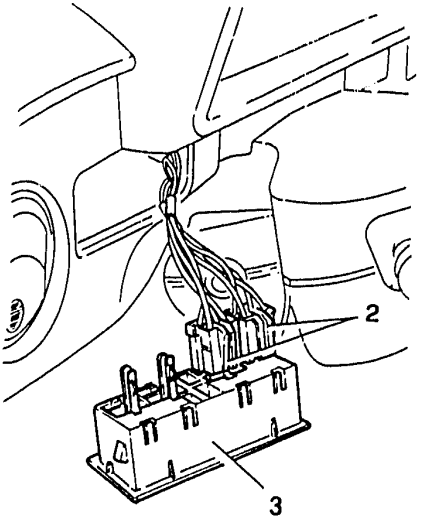

2. Disconnect the electrical connections from the switches.
3. Remove the switch unit.

Removal - refitting (continued)

1. Pull off the plastic clip and remove the switches from their seatings.

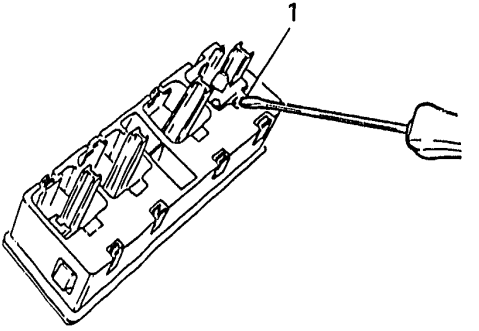

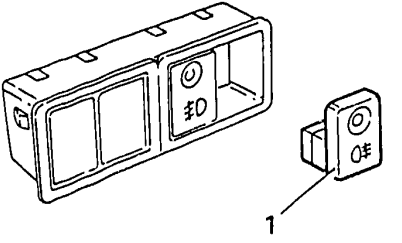

FOUR-WHEEL DRIVE CONTROL BUTTON

Removal - refitting

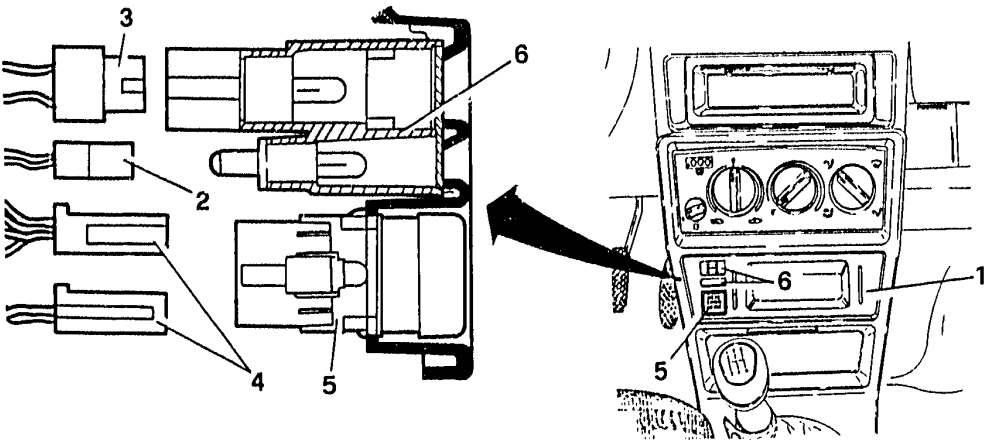

1. Pull the grille from the central console.
2. Disconnect the two electrical connections from the four-wheel drive system malfunction warning lamp.
3. Disconnect the electrical connection from the "four-wheel drive engaged" warning lamp.
4. Disconnect the two electrical connections from the four-wheel drive control button.
5. Pull off the button and withdraw it from the outer side of the grille.
6. Pull off the block housing the two warning lamps and remove it from the inner side of the grille.

HEADLIGHT ALIGNMENT SWITCH

Removal - refitting

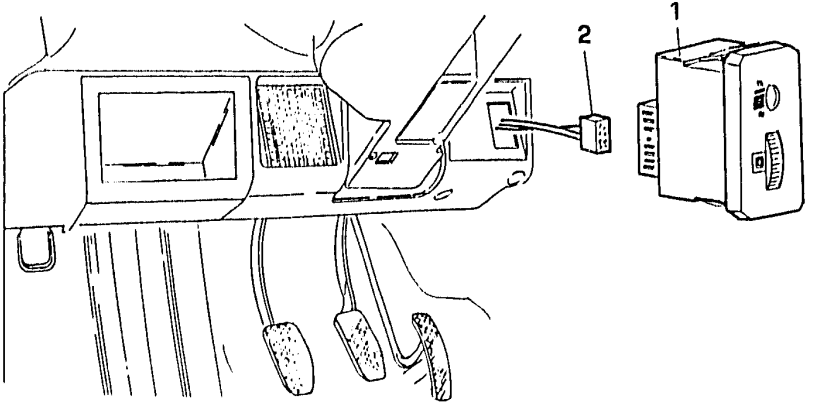

1. Using an appropriate tool pull off the press fitted switch from the left-hand trimming panel under the dashboard.
2. Disconnect the connector from the switch.

BRAKE LIGHT SWITCH

Removal - refitting

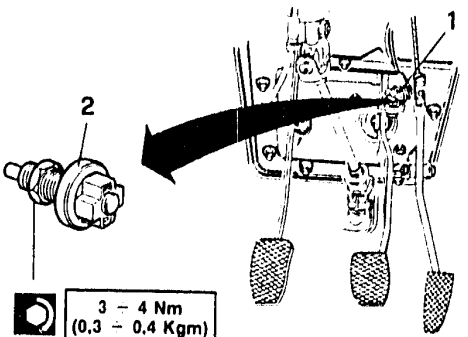

1. Disconnect the two electrical connections (four on vehicles with ALFA CONTROL) from the brake lights.
2. Unscrew and remove the brake light switch.

- Ensure that the switches are working correctly by connecting the contacts to a tester. If the values are incorrect, replace the switches.

4 pin switch (on vehicles with ALFA CONTROL)

	OFF	ON
contacts normally open	R = ∞	R = 0
contacts normally closed	R = 0	R = ∞

2 pin switch (on vehicles without ALFA CONTROL)

	OFF	ON
contacts normally open	R = ∞	R = 0

SUPPLEMENTARY BRAKE LIGHT SWITCH

Removal - refitting (for 4x4 models)

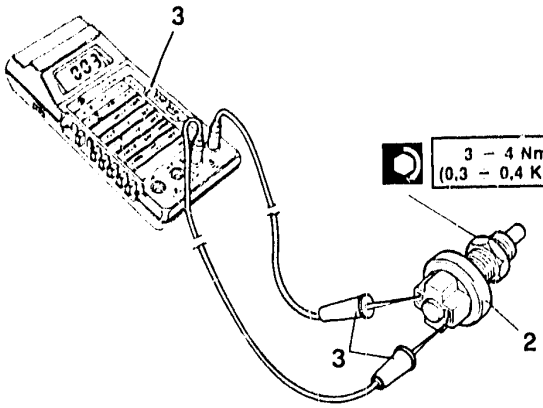

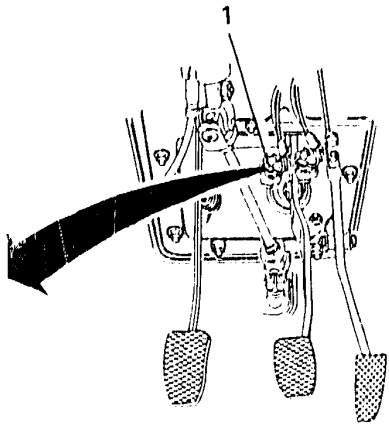

1. Disconnect the two electrical connections.
2. Unscrew and remove the switch.
3. Ensure that the switch is working correctly by attaching a tester to the contacts. If the values are incorrect, replace the switch.

OFF	ON
R = ∞	R = 0
contacts normally open	

REVERSING LIGHTS SWITCH

Removal - refitting

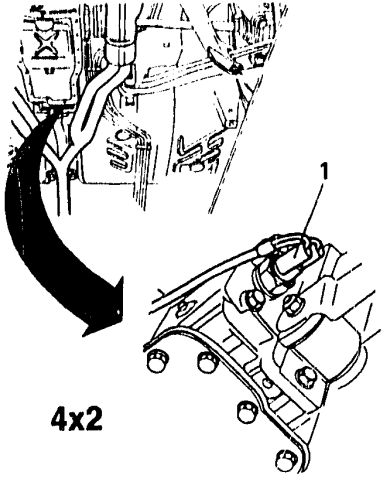

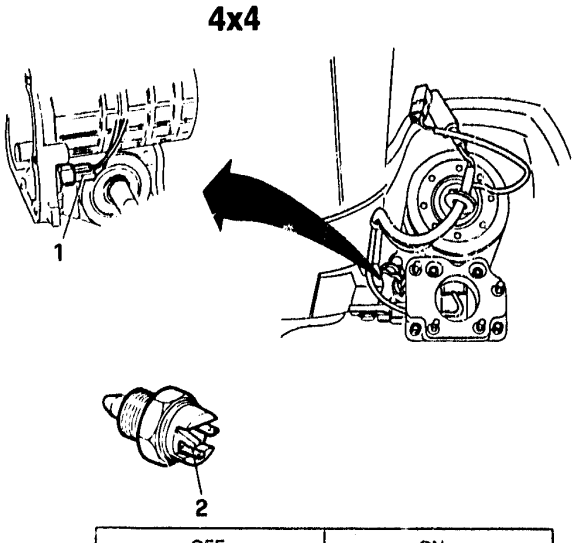

1. Disconnect the two electrical connections.
2. Unscrew and remove the reversing light switch.

- Ensure that the switch is working correctly by attaching a tester to the contacts. If the values are incorrect, replace the switch.

OFF	ON
R = ∞	R = 0
contacts normally open	

HANDBRAKE WARNING LAMP SWITCH

Removal - refitting

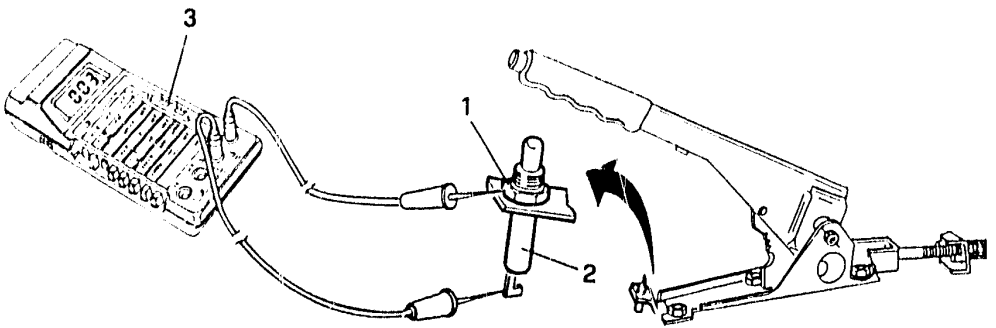

- Remove the rear console (see GROUP. 66).
1. Unscrew the nut.
2. Withdraw the switch from the lower part.
- Disconnect the electrical connection and remove the switch.
3. Ensure that the switch is working correctly by attaching a tester. If the values are incorrect, replace the switch.

OFF	ON
R = ∞	R = 0
contacts normally open	

PASSENGER COMPARTMENT LIGHTING SWITCH ON DOOR PILLAR
Removal - refitting

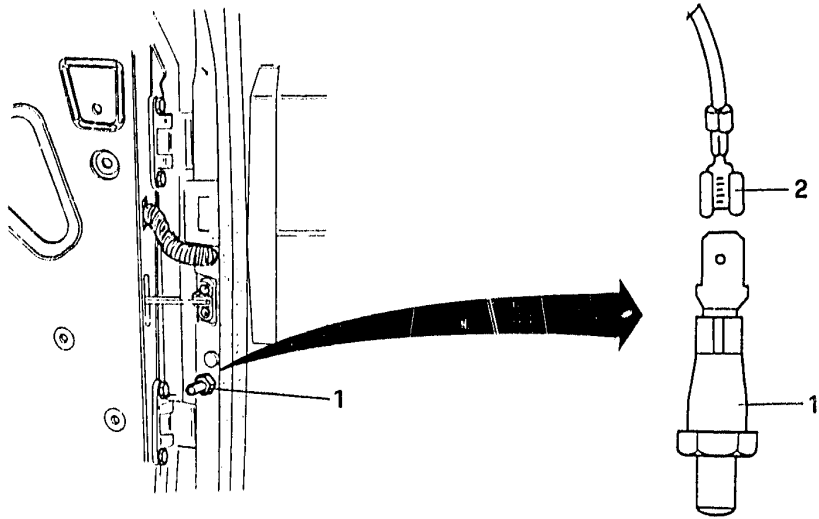

1. Unscrew the switch and remove it from its seating.
2. Disconnect the electrical connection.

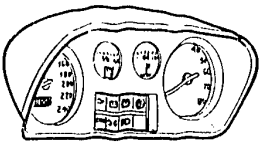

RULES AND PRECAUTIONS

INSTRUMENT PANEL

RULES AND PRECAUTIONS ..... 43 - 1

INSTRUMENT PANEL (BORLETTI TYPE)

ASSEMBLY ..... 43 - 2
REMOVAL - REFITTING ..... 43 - 3
REPLACING WARNING LAMPS AND ILLUMINATING LAMPS ..... 43 - 4
LOCATING WARNING LAMPS ..... 43 - 5
DISASSEMBLY ..... 43 - 6

INSTRUMENT PANEL (C.G.S. LUCAS TYPE)

ASSEMBLY ..... 43 - 9
REMOVAL - REFITTING ..... 43 - 10
REPLACING WARNING LAMPS AND ILLUMINATING LAMPS ..... 43 - 11
DISASSEMBLY ..... 43 - 12

RULES AND PRECAUTIONS

- Before starting any work, ensure that the ignition key is in the "garage" position and that the negative cable of the battery has been disconnected.
  - Avoid directly connecting the output of the control unit to the power supply.
  - Avoid working on the device when the wires are connected to "positive" or "earth" without having previously disconnected the control unit.
  - Avoid short-circuiting the sensors unless otherwise indicated.

  N.B. Anticipate all the possible consequences of any work carried out and avoid intervening when the characteristics of the components are unknown.
- When reassembling and/or refitting, reverse the procedures followed for disassembly and/or removal unless otherwise indicated and reconnect the battery.

INSTRUMENT PANEL (BORLETTI TYPE)

ASSEMBLY

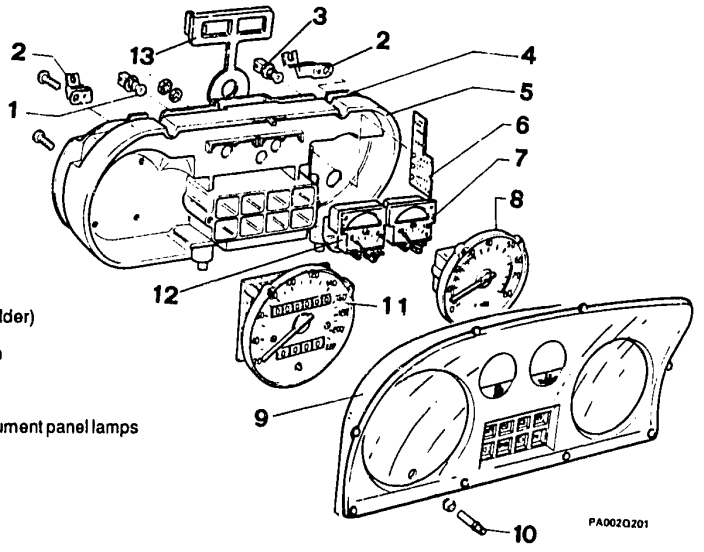

1 Warning lamp (complete with bulb holder)
2 Brackets
3 Instrument panel lamp (complete with bulb holder)
4 Circuits
5 Rear cover
6 Timer for ignition/cut-off warning instrument panel lamps (for models without Alfa Control)
7 Engine coolant temperature indicator
8 Rev counter
9 Grille
10 Partial odometer reset knob
11 Speedometer - Odometer
12 Fuel level indicator
13 Connector support frame

REMOVAL - REFITTING

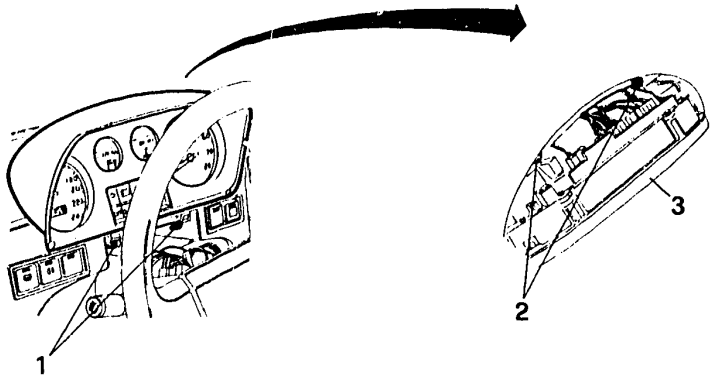

Before beginning work ensure that the ignition key is in the "ST" position and that the negative cable of the battery has been disconnected.

- Remove the cowlings from the steering column by unscrewing the five screws located under the lower cowling.

1. Loosen the lower screws from the instrument panel and remove the moulding.
- Remove the finishing trim from the instrument panel.
2. Remove the two upper retaining screws.
3. Raise the instrument panel, disconnect the electrical connections and remove the instrument panel.

REPLACING WARNING LAMPS AND ILLUMINATING LAMPS

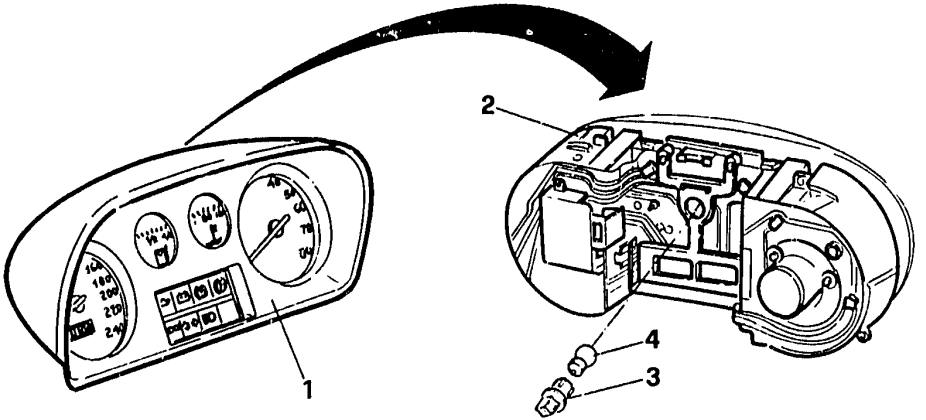

1. Remove the panel from the dashboard.
2. Rotate the panel.
3. Remove the bulb holder.
4. Withdraw the bulb and replace it.

LOCATING WARNING LAMPS

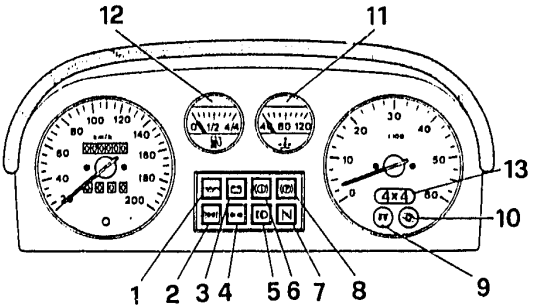

1 Minimum engine oil pressure warning lamp

2 Sidelights warning lamp

3 Generator charge warning lamp

4 Direction indicators warning lamp

5 Main-beam headlights warning lamp

6 - Brake fluid minimum level and brake pad wear warning lamp (for models without ALFA CONTROL)
- Brake fluid minimum level warning lamp (for vehicles with ALFA CONTROL)

7 - "Starter on" warning lamp (for models with carburettor)
- ABS system warning lamp (where applicable)

8 Handbrake warning lamp

9 Glow plug warning lamp (for turbodiesel models)

10 Turbo pressure warning lamp (for turbodiesel models)

11 Engine coolant maximum temperature warning lamp

12 Fuel reserve warning lamp

13 Permanent four-wheel drive malfunction warning lamp (where applicable)

DISASSEMBLY

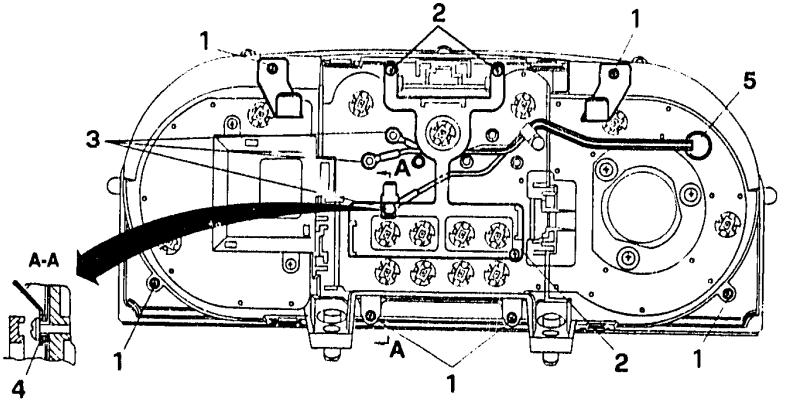

1. Loosen the six screws and remove the frame and brackets.
2. Remove the connector support frame by unscrewing the three screws.
3. Loosen the retaining screws and disconnect the three wires carrying the speedometer signal.
4. Remove the connector attachment for the transmission of the impulses to the control unit of the electromagnetic coupling (for 4x4 models)
5. Remove the cable clamp.

DISASSEMBLY (continued)

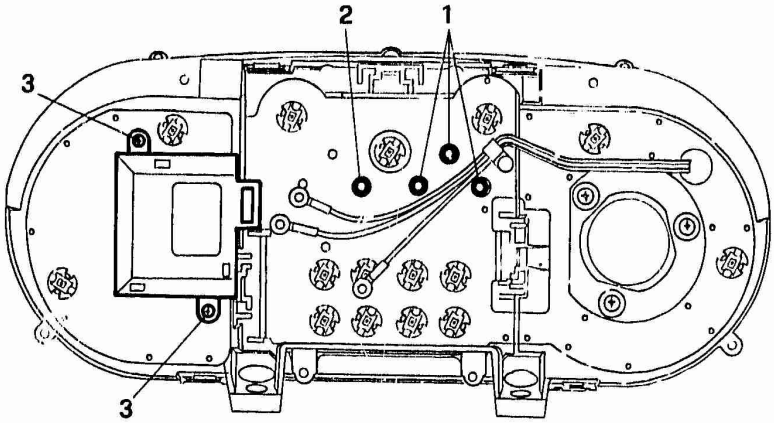

1. Loosen the three retaining screws and remove the fuel level indicator.
2. Unscrew the retaining screw (the other two were removed previously when disconnecting the wires for the transmission of the speedometer signal) and remove the temperature indicator.
3. Remove the electronic module by unscrewing the two retaining screws.

DISASSEMBLY (continued)

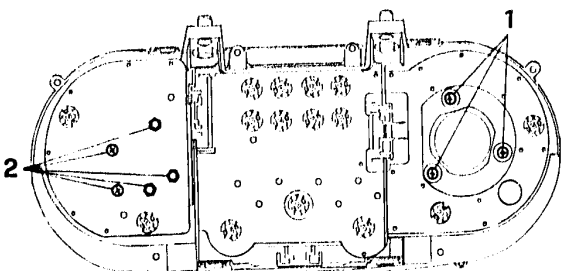

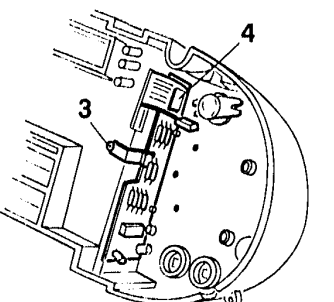

1. Remove the speedometer by unscrewing the three retaining screws.
2. Remove the rev counter by unscrewing the three nuts and two screws.
3. Unscrew the retaining screw securing the bracket holding the warning lamp cut-off timer device (for models with ALFA CONTROL).
4. Disconnect the electrical connections and remove the warning lamp cut-off timer device.

- If necessary remove the printed circuit after removing all the bulbs.

INSTRUMENT PANEL (C.G.S. LUCAS TYPE)

ASSEMBLY

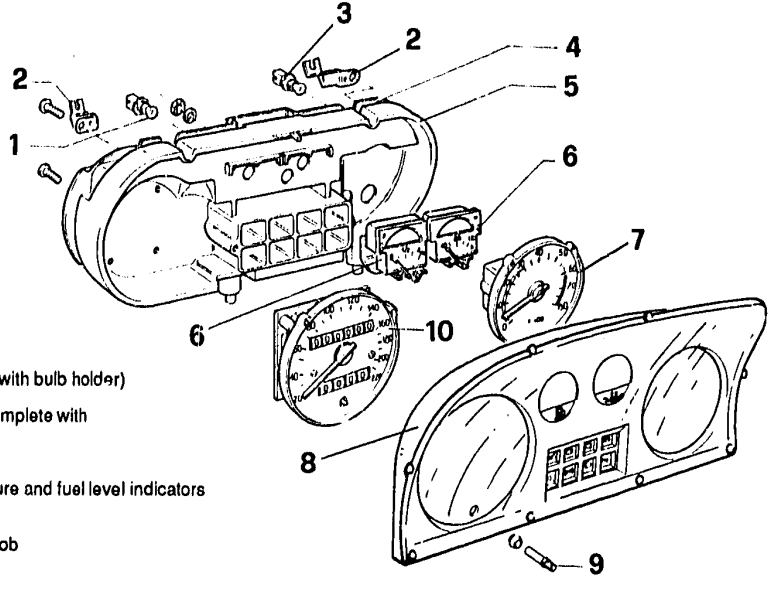

1 Warning lamp (complete with bulb holder)
2 Brackets
3 Instrument panel light (complete with bulb holder)
4 Circuits
5 Rear cover
6 Engine coolant temperature and fuel level indicators
7 Rev counter
8 Grille
9 Partial odometer reset knob
10 Speedometer - odometer

REMOVAL - REFITTING

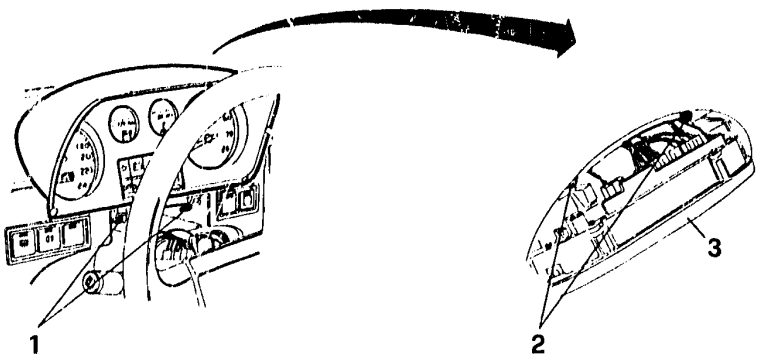

Before beginning work ensure that the ignition key is in the "ST" position and that the negative cable of the battery has been disconnected.

- Remove the cowlings from the steering column by unscrewing the five screws located under the lower cowling.

1. Loosen the lower screws from the instrument panel and remove the moulding.
- Remove the instrument panel finishing trim.
2. Remove the two upper retaining screws.
3. Raise the instrument panel, disconnect the wiring and remove the panel.

REPLACING WARNING LAMPS AND ILLUMINATING LAMPS

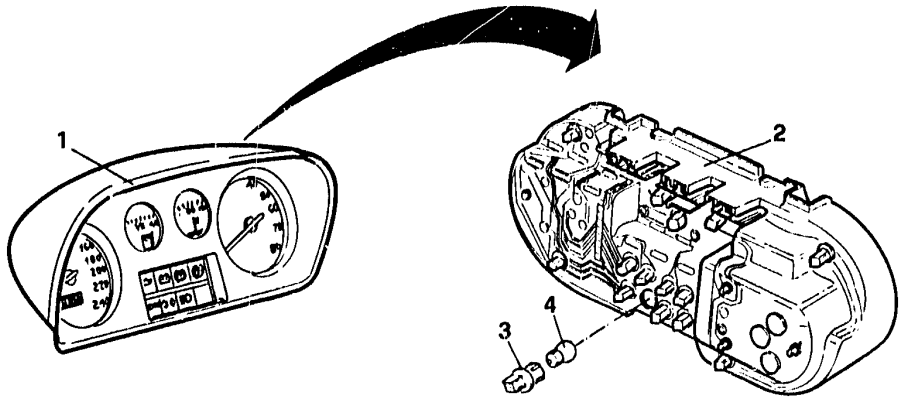

1. Remove the instrument panel from the dashboard.
2. Rotate the instrument panel.
3. Remove the bulb holder.
4. Withdraw the bulb and replace it.

DISASSEMBLY

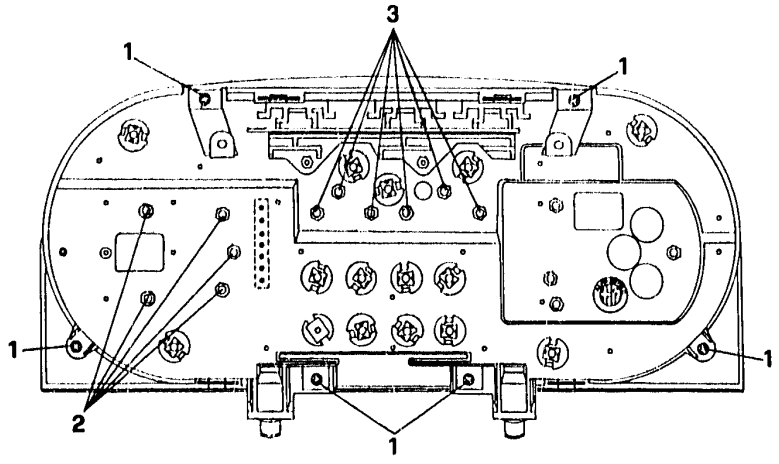

1. Unscrew the six screws and remove the frame and the brackets.
2. Unscrew the five nuts and remove the odometer.
3. Unscrew the six nuts and remove the fuel level indicator and engine coolant temperature indicator assembly.

DISASSEMBLY (continued)

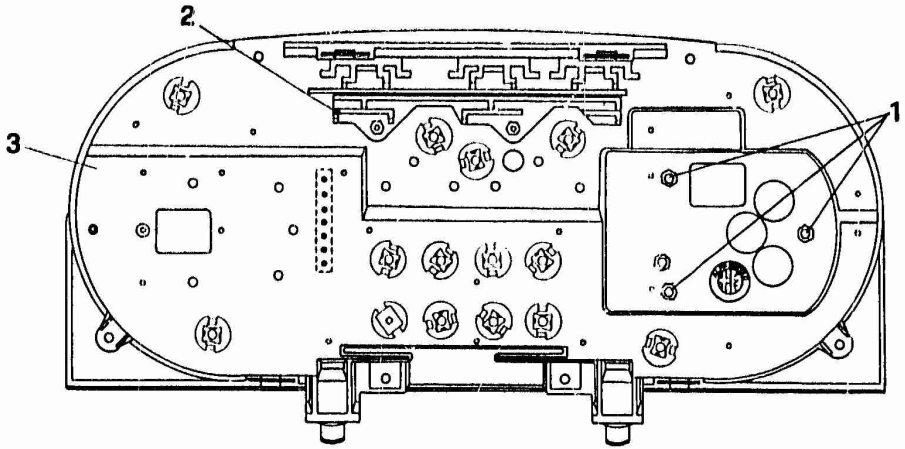

1. Remove the three nuts and remove the speedometer-odometer.
2. Remove the connector support by unscrewing the two retaining screws.
3. If necessary remove the printed circuit after first removing all the bulbs.

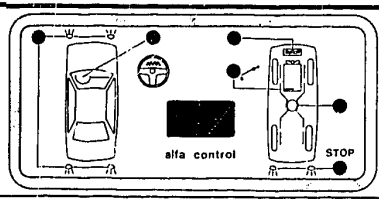

CONTROL UNITS

CONTROL UNITS

ALFA ROMEO CONTROL....43 - 14
Removal - Refitting....43 - 14
Location warning lamps....43 - 15
IGNITION - INJECTION CONTROL UNIT
(For engine with IAW injection)....43 - 16
Removal - Refitting....43 - 16
IGNITION CONTROL UNIT
(For engines with LE3-JETRONIC
electronic injection)....43 - 17
Removal - Refitting....43 - 17
INJECTION CONTROL UNIT
(For engines with LE3-JETRONIC
electronic injection)....43 - 18
Removal - Refitting....43 - 18
IGNITION - INJECTION CONTROL UNIT
(Specific for engines with MOTRONIC MP3.1
electronic injection)....43 - 19
Removal - Refitting....43 - 19
IGNITION - INJECTION CONTROL UNIT
(Specific for engine with MOTRONIC ML4.1
electronic injection)....43 - 20
Removal - Refitting....43 - 20
GLOWPLUG DEVICE
(For turbodiesel engine)....40 - 21
Removal - Refitting....40 - 21
ELECTRONIC THERMOSTAT
CONTROL UNIT....43 - 22
Removal - Refitting....43 - 22
A.B.S. CONTROL UNIT....43 - 23
Removal - Refitting....43 - 23
CONTROL UNIT FOR ELECTROMAGNETIC
COUPLING (For 4x4 versions)....43 - 24
Removal - Refitting....43 - 24
DOOR LOCKING SYSTEM AND "LIGHTS ON"
CONTROL UNITS....43 - 25
Removal - Refitting....43 - 25

CONTROL UNITS

ALFA ROMEO CONTROL

Removal - Refitting

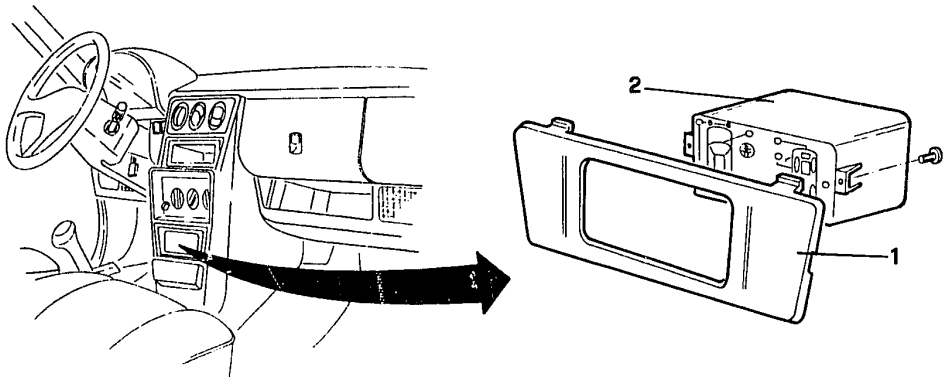

- Disconnect the negative cable from the battery.

1. Withdraw the moulding from the central console.

- Disconnect the four connectors from the control unit.
- Disconnect the two electrical connections from the four-wheel drive control button, the two electrical connections from the four- wheel drive malfunction warning lamp and the electrical connection from the four-wheel drive engaged warning lamp (for 4x4 models).

2 Remove the control unit in a bench by unscrewing the two screws securing it to the grille.

ALFA ROMEO CONTROL (continued)

Locating warning lamps

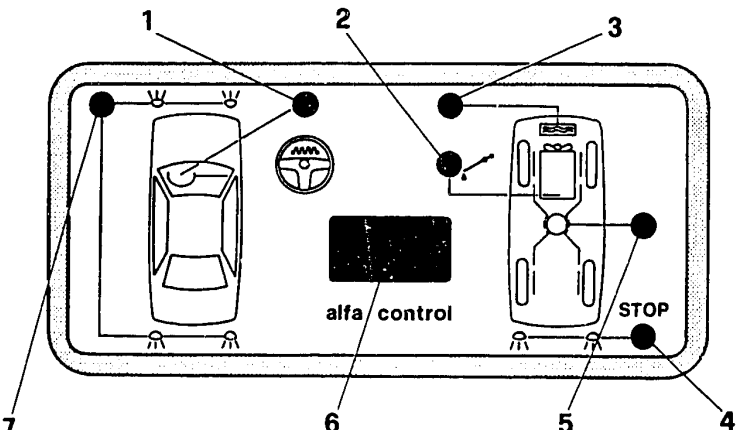

1. Instrument panel warning lamp efficiency indicator.
2. Engine oil level warning lamp.
3. Engine coolant level warning lamp.
4. Stoplights efficiency warning lamp.
5. Brake pad wear warning lamp.
6. General malfunction warning lamp.
7. Sidelights efficiency warning lamp.

IGNITION - INJECTION CONTROL UNIT (For engine with IAW injection)
Removal - Refitting

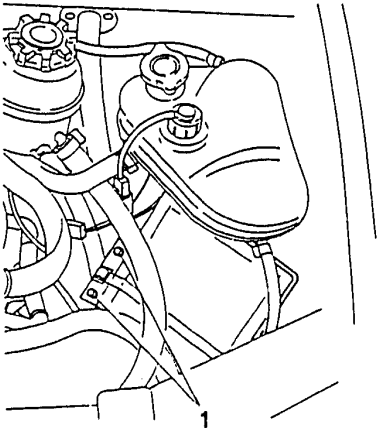

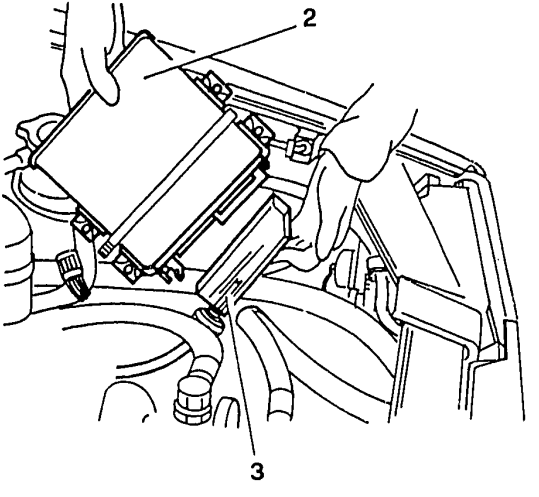

- Disconnect the negative cable from the battery.
1. Loosen the four screws securing the control unit.
2. Withdraw the control unit from its seating.
3. Disconnect the comb connector from the control unit and remove the control unit.

IGNITION CONTROL UNIT (For engines with LE3-JETRONIC electronic injection)

Removal - Refitting

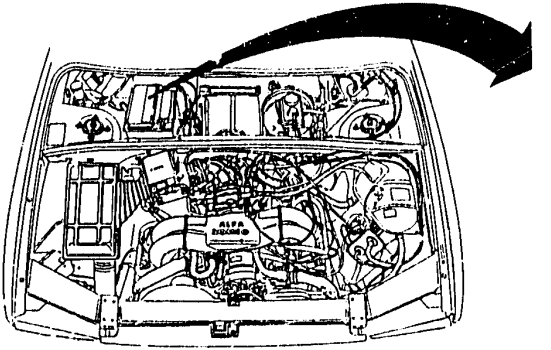

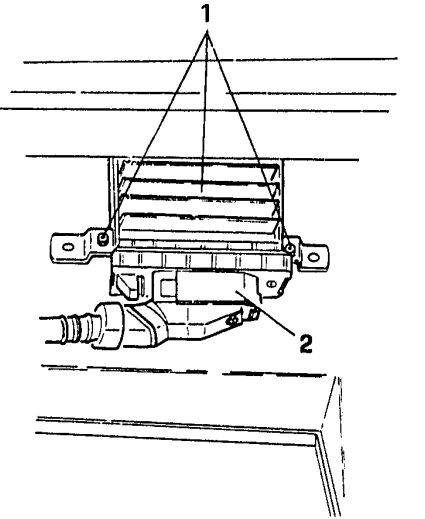

- Disconnect the negative cable from the battery.
1. Loosen the two screws and raise the ignition control unit.
2. Disconnect the comb connector from the control unit and remove the control unit.

INJECTION CONTROL UNIT (for engines with LE3-JETRONIC electronic injection)
Removal - Refitting

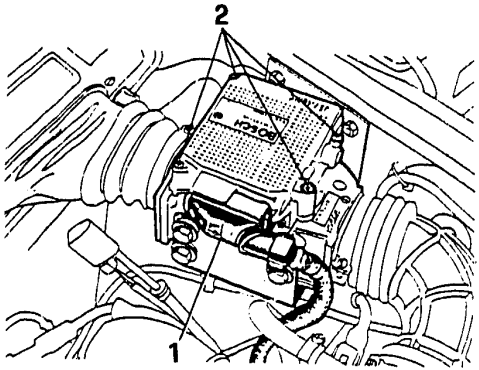

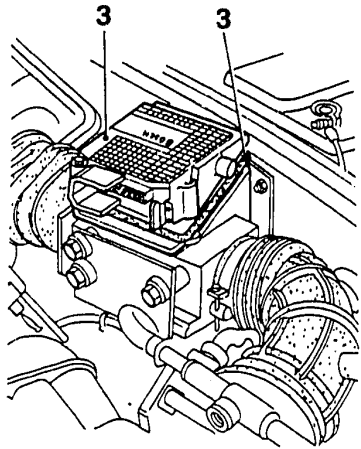

- Disconnect the negative cable from the battery.
1. Disconnect the comb connector.
2. Unscrew the four retaining screws.
3. Remove the control unit and seal ring.

- Fit a new seal seal cap when refitting and if the control unit has been replaced, check the adjustment of the exhaust CO percentage (see GR. 00).

IGNITION - INJECTION CONTROL UNIT (Specific for engines with MOTRONIC MP3.1 electronic injection)
Removal - Refitting

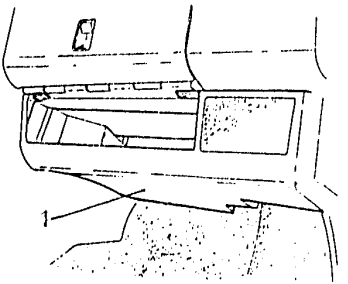

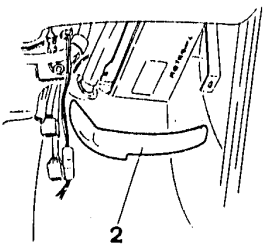

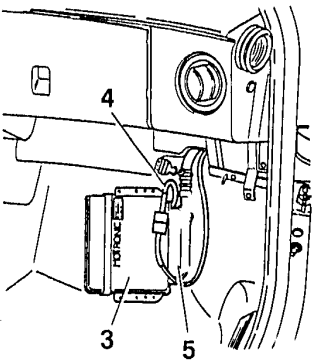

- Disconnect the negative cable from the battery.
1. Remove the trim from under the right-hand side of the dashboard.
2. Remove the control unit support by unscrewing the two nuts.
3. Remove the control unit.
4. Disconnect the vacuum intake for the absolute pressure sensor (incorporated in the control unit) from the control unit.
5. Disconnect and remove the comb connector from the control unit.

IGNITION - INJECTION CONTROL UNIT (Specific for engine with MOTRONIC ML4.1 electronic injection)

Removal - Refitting

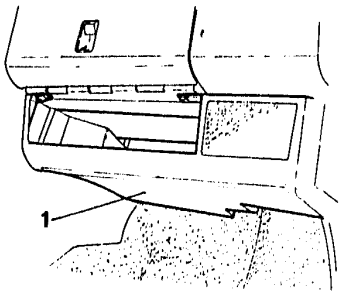

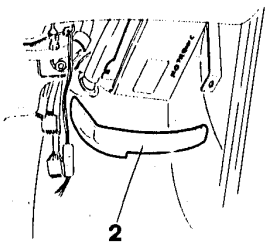

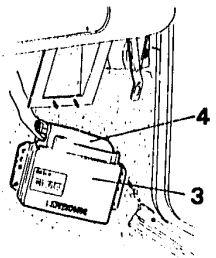

- Disconnect the negative cable from the battery.
1. Remove the right-hand covering from under the dashboard.
2. Remove the control unit support by unscrewing the two nuts.
3. Withdraw the control unit.
4. Disconnect the comb connector from the control unit and remove the control unit.

GLOWPLUG DEVICE (For turbodiesel engine)
Removal - Refitting

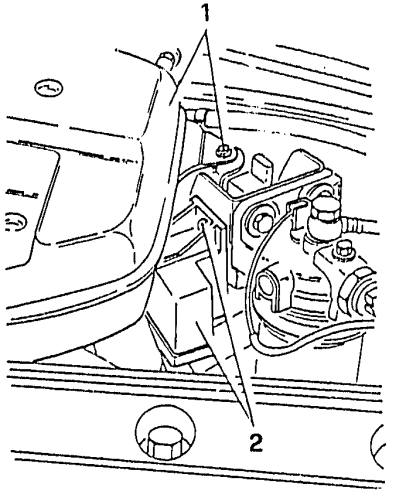

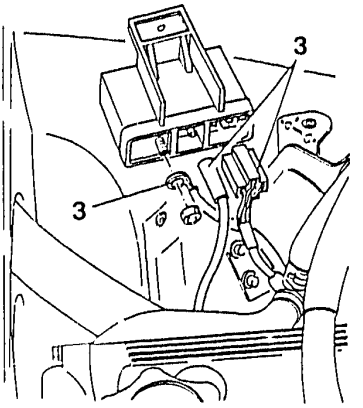

1. Loosen the screws and move the windscreen washer fluid reservoir.
2. Loosen the screw and raise the glowplug timer.
3. Disconnect the 3 electrical connections from the timer and remove the timer.

ELECTRONIC THERMOSTAT CONTROL UNIT
Removal - Refitting

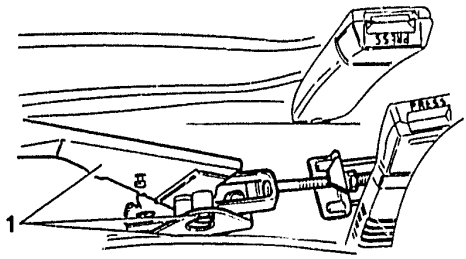

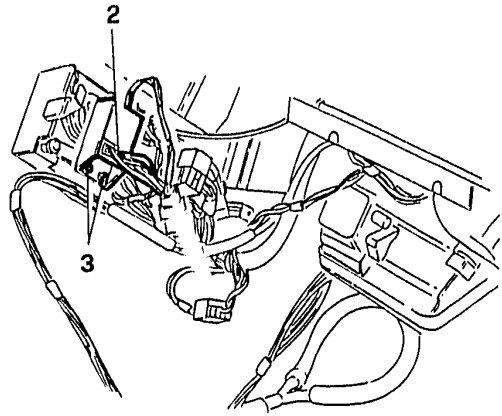

- Disconnect the negative cable from the battery.
- Remove the rear console (see GR. 66).

1. Disconnect the handbrake lever from its support by unscrewing the bolt.

- Remove the right and left-hand coverings from under the dashboard (see GR. 66).
- remove the gearbox central console (see GR. 66).

2. Disconnect the electrical connection from the thermostat.
3. Unscrew the two nuts and remove the thermostat from the support bracket.

A.B.S. CONTROL UNIT

Removal - Refitting

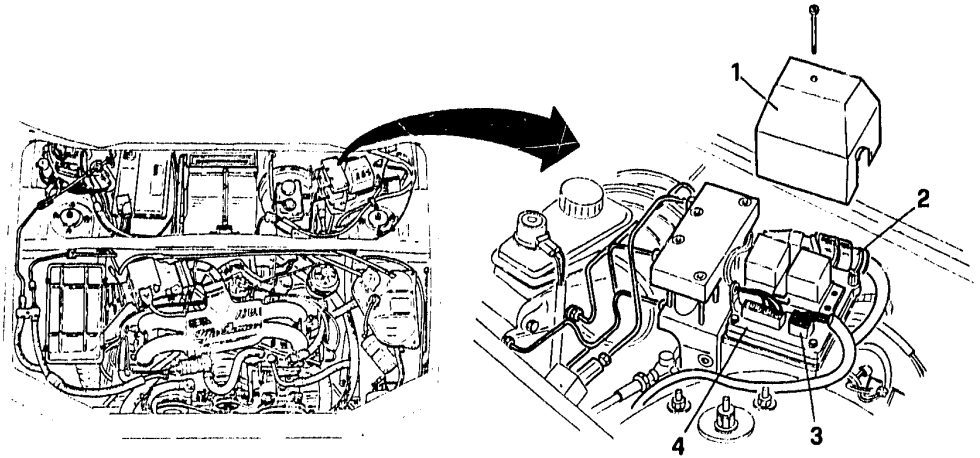

- Disconnect the negative cable from the battery.
1. Remove the cover.
2. Disconnect the comb connector from the electronic control unit.
3. Disconnect the four pin connector from the hydraulic unit.
4. Loosen the four screws and remove the entire control unit.

CONTROL UNIT FOR ELECTROMAGNETIC COUPLING (Specific for 4x4 versions)

Removal - refitting

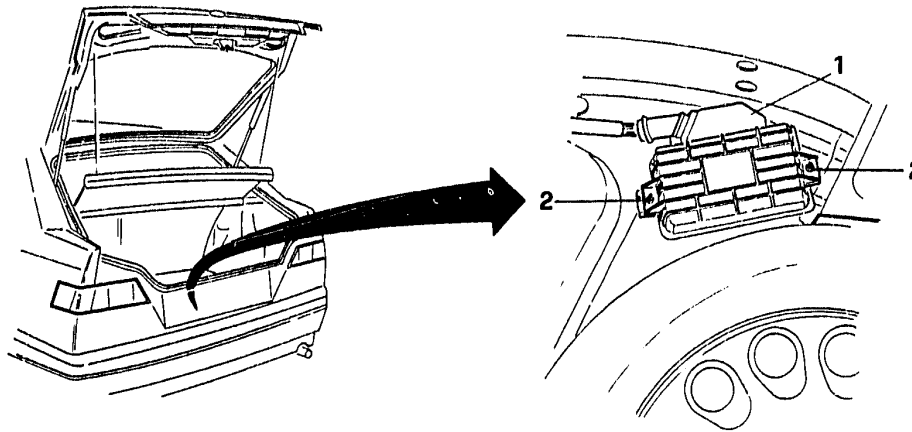

- Disconnect the negative cable from the battery.
- Lift the luggage compartment trim.

1. Disconnect the comb connector.
2. Unscrew the two retaining nuts and remove the control unit.

DOOR LOCKING SYSTEM AND "LIGHTS ON" CONTROL UNITS

Removal - Refitting

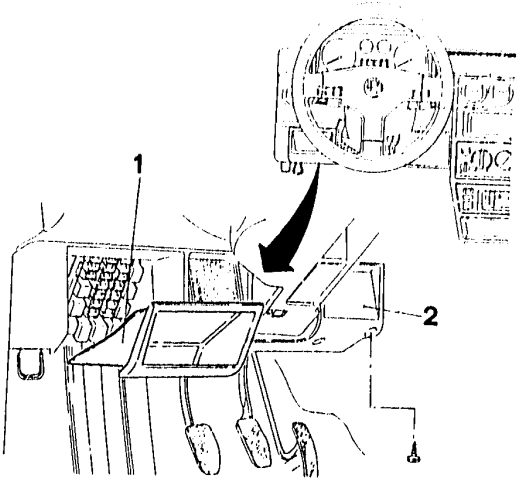

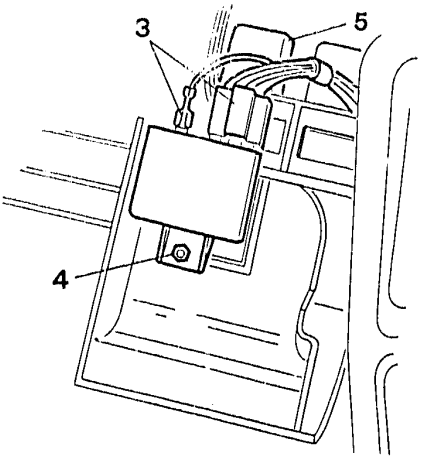

- Disconnect the negative cable from the battery.
1. Remove the pressure fitted glovebox.
2. Remove the left-hand trim from under the dashboard.
3. Disconnect the two electrical connections from the door locking system control unit.
4. Unscrew the retaining nut and remove the door locking system control unit from the trim under the dashboard.
5. Remove the "lights on" signal control unit by withdrawing it from the header.

MICROFICHE INDEX

Microfiche 12/15 Groups: 49-55-56



Group 49 - Body-whole plate parts

GENERAL INFORMATION, BODY COMPONENT PARTS, BODY STRUCTURE ..... 49 - A
BODY SEALING, FOAM INSULATION, BODY ALIGNMENT ..... 49 - B
STANDARDS AND PRECAUTIONS ..... 49 - C
REPLACEMENTS ..... 49 - D
REPLACEMENTS (Continued) ..... 49 - E
REPLACEMENTS (Continued) ..... 49 - F
REPLACEMENTS (Continued) ..... 49 - G
REPLACEMENTS (Continued) ..... 49 - H
TCS ..... 49 - I



Group 55 - Doors

FRONT DOORS ..... 55 - L
REAR DOORS ..... 55 - M



Group 56 - Front and rear hoods

FRONT HOOD ..... 56 - N
LIFTGATE, SPOILER (For 33 models) ..... 56 - O
LIFTGATE, SPOILER (For Sport Wagon models) ..... 56 - P

33 MODELS

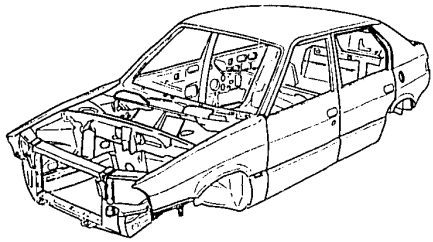

GENERAL INFORMATION

BODY COMPONENT PARTS

BODY STRUCTURE

GENERAL INFORMATION ..... 49 - 1

BODY COMPONENT PARTS

BODY COMPONENTS ..... 49 - 2

UNDERBODY COMPONENTS ..... 49 - 4

BODY STRUCTURE

CROSS-SECTION OF BOX PANELS ..... 49 - 8

GENERAL INFORMATION

!DENTIFICATION DATA

See: **GR** 00

JACKING POINTS

See: **GR** 00

SUSPENSION GEOMETRY

See: **GR** 21 e **GR** 25

BODY COMPONENT PARTS

BODY COMPONENTS

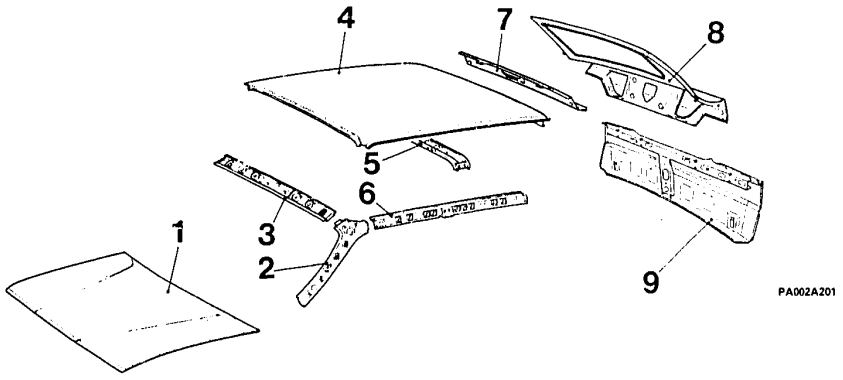

1 Hood
2 Front pillar box panel
3 Upper windscreen crossmember
4 Roof panel
5 Central hoop
6 Upper side box panel ring
7 Liftgate crossmember
8 Liftgate
9 Tail assembly

BODY COMPONENT PARTS

BODY COMPONENTS (continued)

NOTE: the components marked ☐ refer to the 4x4 version only

1 Side panel fender attachment
2 Front fender attachment
3 Front fender
4 Front pillar reinforcement
5 Drip molding cover
6 Right interior side panel
7 Drip molding
8 Central pillar box panel
9 Central pillar reinforcement assembly
10 Rear exterior wheelhouse
11 Rear fender framework
12 Rear interior wheelhouse
13 Rear fender channel
14 Left interior side panel
15 Rear fender
16 Rear door assembly
17 Front door assembly
18 Door hinge
19 Shim
20 Central pillar
21 Front pillar
22 Door sub-panel
23 Complete side panel

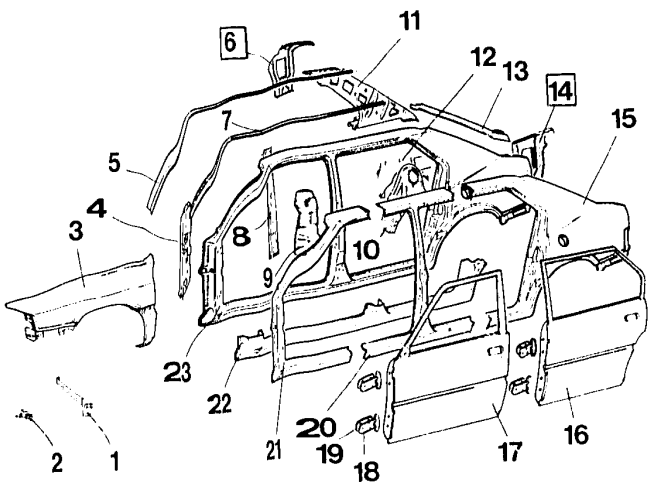

PA003A201

BODY COMPONENT PARTS (continued)

UNDERBODY COMPONENTS

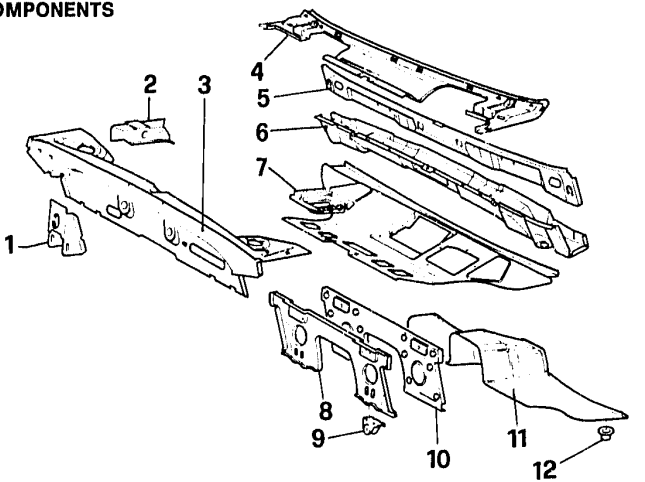

1 Bracket assembly
2 Side panel lateral reinforcement
3 Service basin front crossmember assembly
4 Lower windscreen panel
5 Lower windscreen framework
6 Air duct assembly
7 Service basin plate (lower part)
8 Instrument panel plate (front part)
9 Front suspension attachment bracket (rear part)
10 Instrument panel plate (rear part)
11 Front floor plate
12 Vehicle jacking point

BODY COMPONENT PARTS

UNDERBODY COMPONENTS (continued)

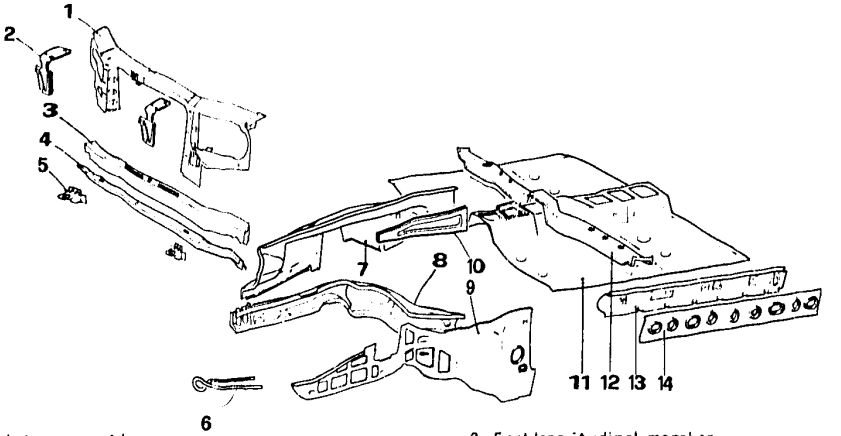

1 Front plate assembly
2 Hood hinge
3 Lower front crossmember
4 Lower front crossmember reinforcement
5 Radiator support
6 Tow hook
7 Upper front semi-wheelhouse
8 Front longitudinal member
9 Lower front semi-wheelhouse
10 Reinforcement
11 Central floor assembly
12 Central floor cross member
13 Central floor centre rail
14 Central floor centre rail diaphragm

BODY COMPONENT PARTS

UNDERBODY COMPONENTS (4x2 version only)

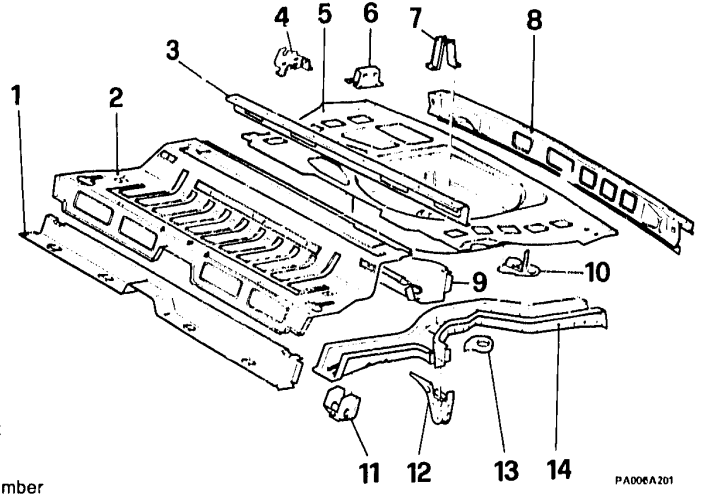

1 Reinforcement crossmember
2 Front part of rear floor plate
3 Rear floor central upper plate
4 Jack support bracket
5 Rear part of rear floor plate
6 Bumper rear attachment bracket
7 Spare wheel attachment bracket
8 Rear floor rear crossmember
9 Rear floor intermediate crossmember
10 Rear tow hook
11 Rear suspension front attachment
12 Upper rear transverse bar attachment bracket
13 Rear suspension spring support bracket
14 Rear floor siderail

BODY COMPONENT PARTS

UNDERBODY COMPONENTS (4x4 version only)

1 Reinforcement crossmember
2 Under-seat cross member
3 Rear floor plate (front part)
4 Upper rear central floor plate
5 Connecting cross-member
6 Jack support bracket
7 Bumper rear attachment bracket
8 Spare wheel attachment bracket
9 Right rear semi-floor plate
10 Rear floor rear crossmember
11 Rear crossmember box panel
12 Connection plate
13 Rear floor front crossmember
14 Left rear semi-floor plate
15 Rear suspension front attachment
16 Rear suspension transverse bar attachment bracket
17 Rear suspension spring support bracket
18 Floor door sill reinforcement
19 Rear tow hook

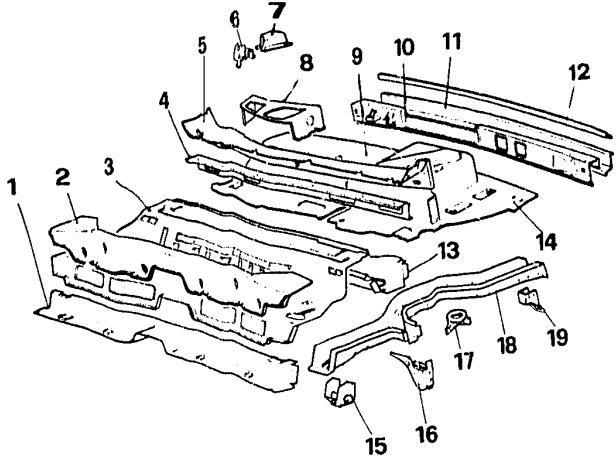

PA007A201

BODY STRUCTURE

CROSS SECTION OF BOX PANELS

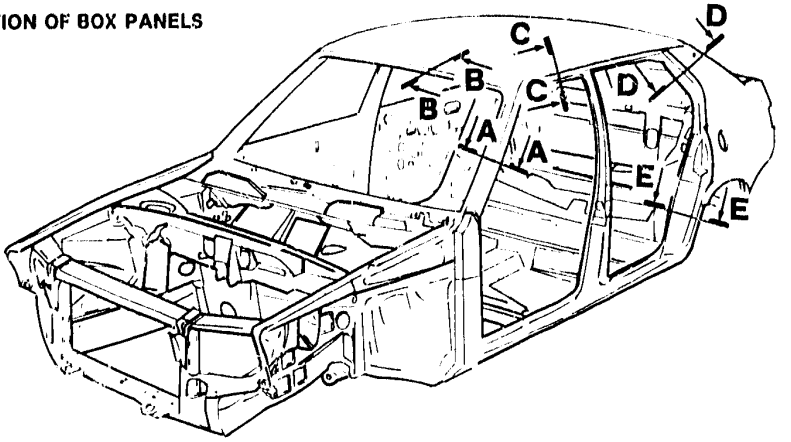

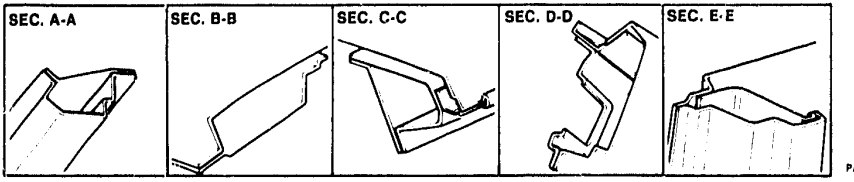

PA008A201

BODY STRUCTURE

CROSS SECTION OF BOX PANELS (continued)

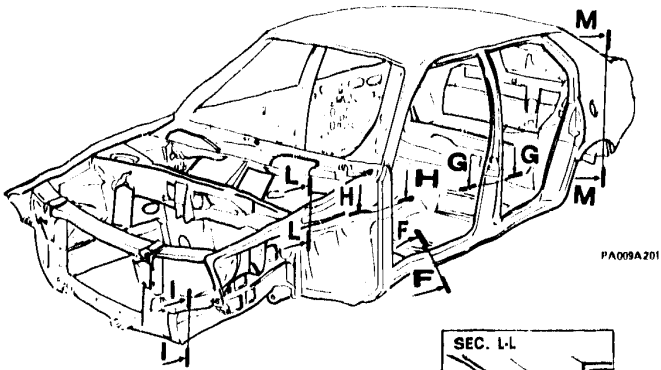

PA009A201

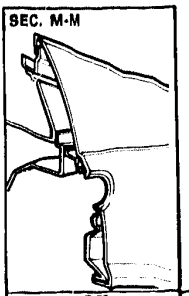

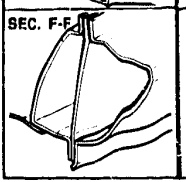

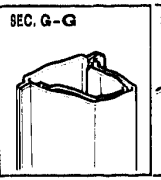

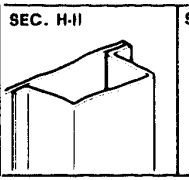

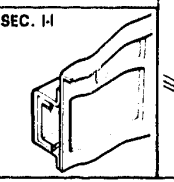

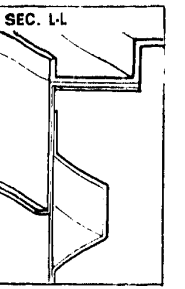

PA009A202

BODY STRUCTURE

CROSS SECTION OF BOX PANELS (continued)

NOTE: SEC. P-P 4x4 version only

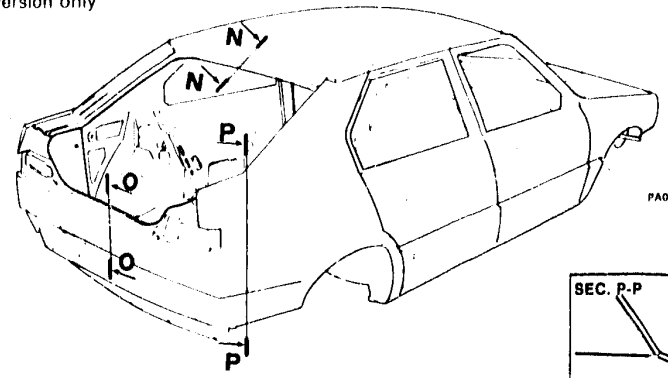

PA010A201

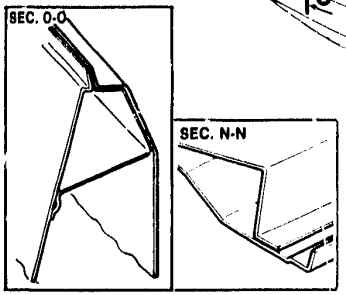

PA010A202

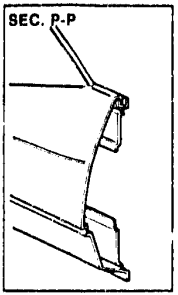

PA010A203

33 MODELS

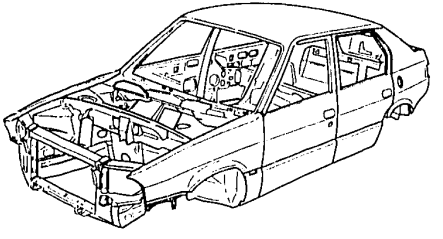

BODY SEALING

FOAM INSULATION

BODY ALIGNMENT

BODY SEALING
DESCRIPTION ..... 49 - 11
LOCATION OF AREAS TO BE SEALED ..... 49 - 12
FOAM INSULATION ..... 49 - 19
BODY ALIGNMENT
MEASUREMENTS ..... 49 - 20
STANDARD DIMENSIONS ..... 49 - 21

BODY SEALING

DESCRIPTION

The sealing should be smooth and without any furrows or gaps.
Take care not to apply the sealing compound excessively and do not let the sealing compound come into contact with zones which are not intended for treatment.

SEALING JOINTS

The sealing compound should be applied by extrusion coating, after the base coat or paint coat, and then smoothed with a brush along all the plate joints to eliminate any sealing defects (see TCS).

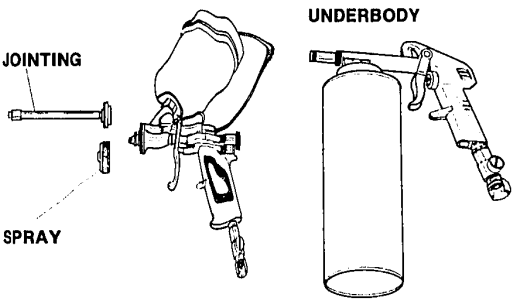

PA011A201

BODY SEALING (continued)

LOCATION OF AREAS TO BE SEALED

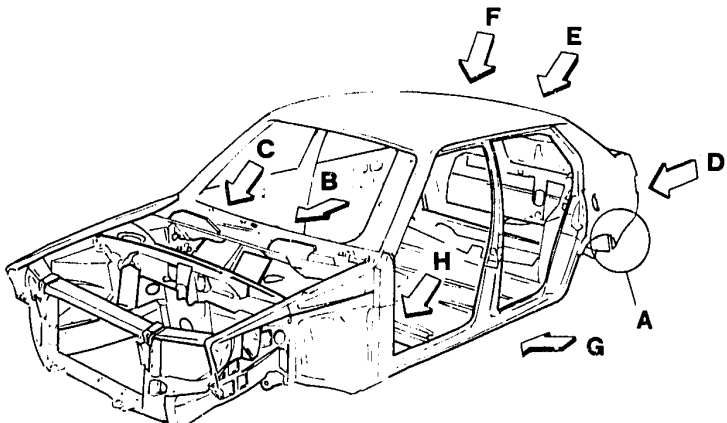

The symbol ⇨ marks the areas to be sealed ⇩

BODY SEALING

LOCATION OF AREAS TO BE SEALED (continued)

Seen from A

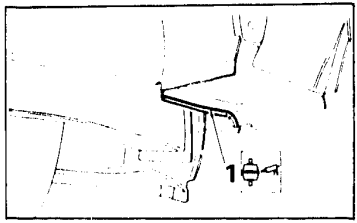

Seen from B

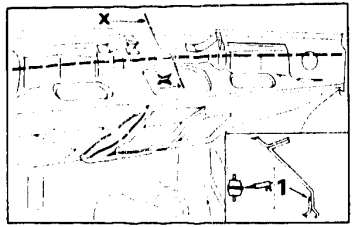

Seen from C

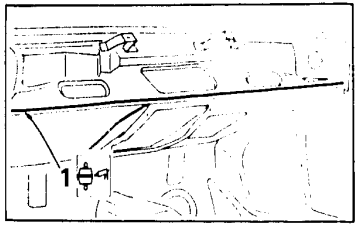

Seen from D

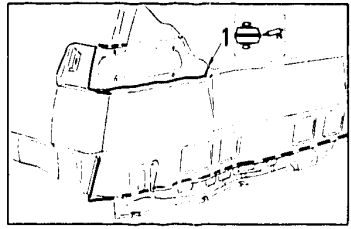

PA013A201

1. Apply sealing compound in the area of the accentuated broken line, in the diagram.

BODY SEALING

LOCATION OF AREAS TO BE SEALED (continued)

Seen from E

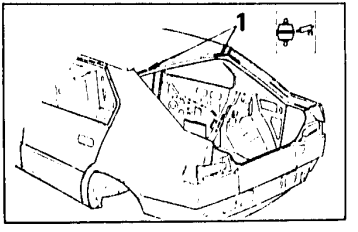

Seen from F

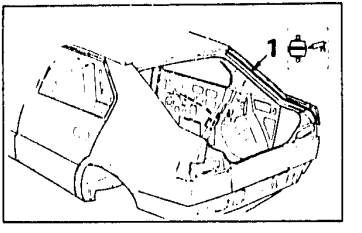

Seen from G

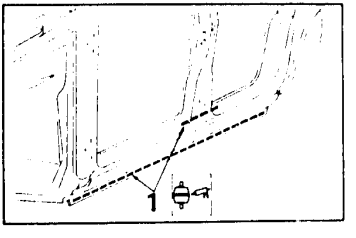

Seen from H

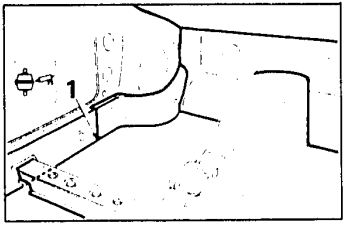

PA014A201

1. Apply sealing compound in the area of the accentuated broken line, in the diagram.

BODY SEALING

LOCATION OF AREAS TO BE SEALED (continued)

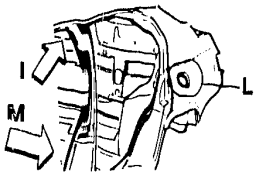

Seen from I

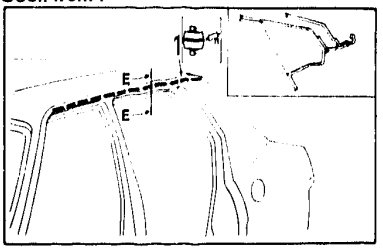

Seen from M

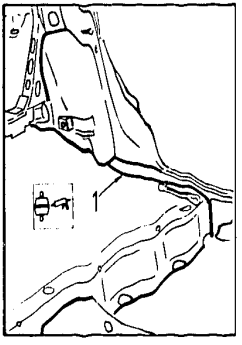

Seen from L

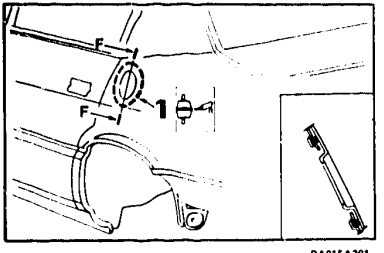

PA015A201

1. Apply sealing compound in the area of the accentuated broken line, in the diagram.

BODY SEALING

LOCATION OF AREAS TO BE SEALED (continued)

Seen from N

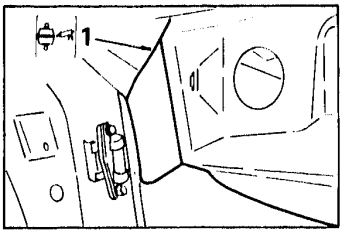

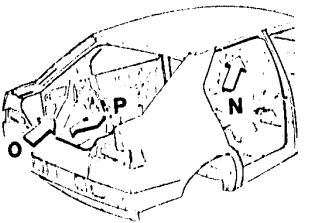

Seen from O

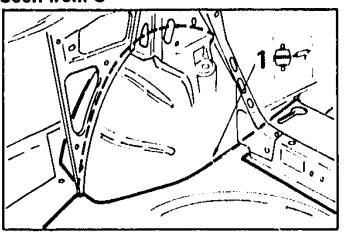

Seen from P

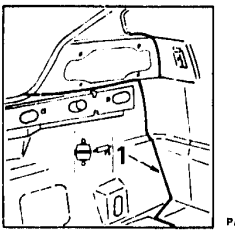

PA018A201

1. Apply sealing compound in the area of the accentuated broken line, in the diagram.

BODY SEALING

LOCATION OF AREAS TO BE SEALED (continued)

Seen from S

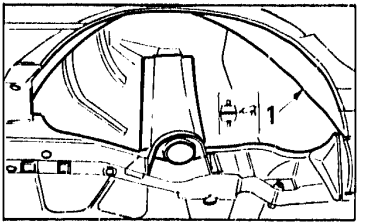

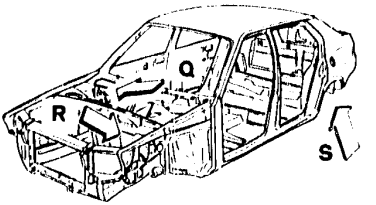

Seen from Q

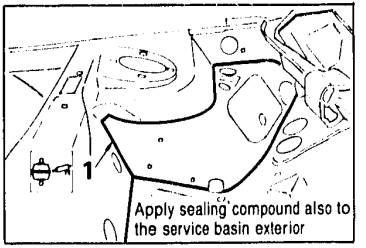

Seen from R

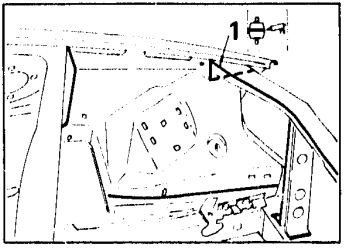

PAD17A201

1. Apply sealing compound in the area of the accentuated broken line, in the diagram.

BODY SEALING

LOCATION OF AREAS TO BE SEALED (continued)

Doors

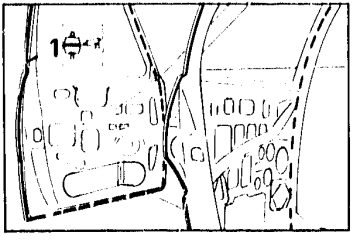

Hood

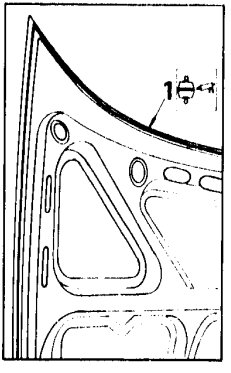

Liftgate

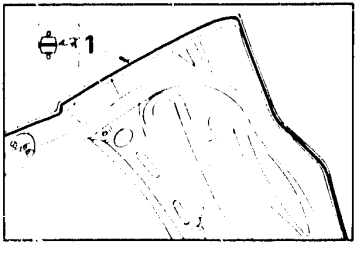

PA018A201

1. Apply sealing compound in the area of the accentuated broken line, in the diagram.

FOAM INSULATION

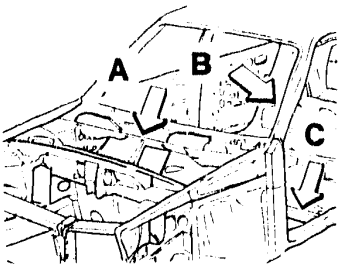

PA019A202

Seen from A

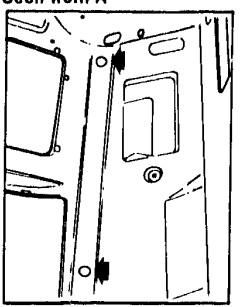
PA019A201

Seen from B

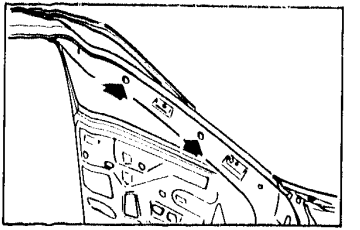

Seen from C

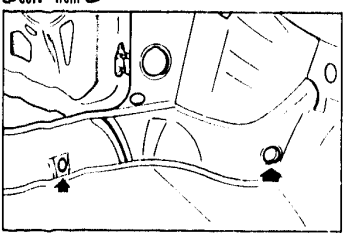
PA019A203

- Introduce the expanded polyurethane foam into the holes marked with the symbol

BODY ALIGNMENT

MEASUREMENTS

1. If a collimating gage is used, set pointers (A) and (B) to the length indicated in the diagram.
   Check both the indicators and the gage itself to ensure that there is no play.
- If a tape measure is used for the measurement, ensure that no stretching, curvature or folding of the tape occurs during the measurement.

NOTE: If the tape touches against one or more parts of the body during the measurement, the measurements of distance or length will not be accurate.

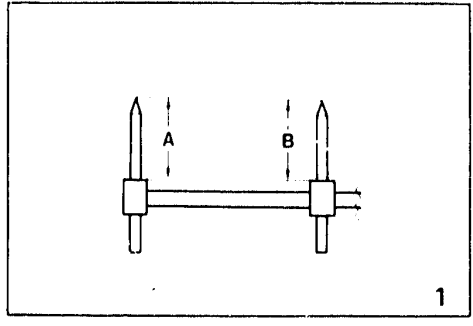

PA020AZ01

BODY ALIGNMENT (continued)

STANDARD DIMENSIONS

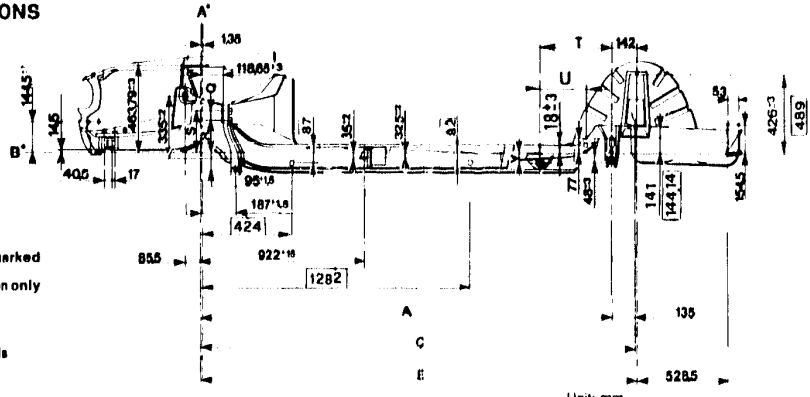

NOTE The measurements marked with ☐ refer to the 4x4 version only

A* – Transverse reference axis

B* – Vertical reference plane

Unit: mm

PA021A201

References and Tolerances	A $^{-1}_{+2}$	C ± 2	E ± 2	Q ± 0.5	R $^{+2}_{-3}$	S $^{+0}_{-15}$	T $^{+0}_{-1.5}$	U ± 1	V ± 3
Body standard dimensions	2315	2450	2457	78	159	237	497.5	387	116.5

A – From wheel centre line to Panhard bar attachment

C – From wheel centre line to lower shock absorber attachment

E – From wheel centre line to upper shock absorber attachment

Q – Steering attachment holes wheelbase

R – From lower steering attachment to vertical reference plane

S – From upper steering attachment to vertical reference plane

T – From rear suspension lower tie-rod attachment to Panhard bar attachment support

U – From rear suspension upper tie-rod attachment to rear suspension lower tie-rod attachment

V – From horizontal reference plane to rear suspension lower tie-rod

BODY ALIGNMENT

STANDARD DIMENSIONS (continued)

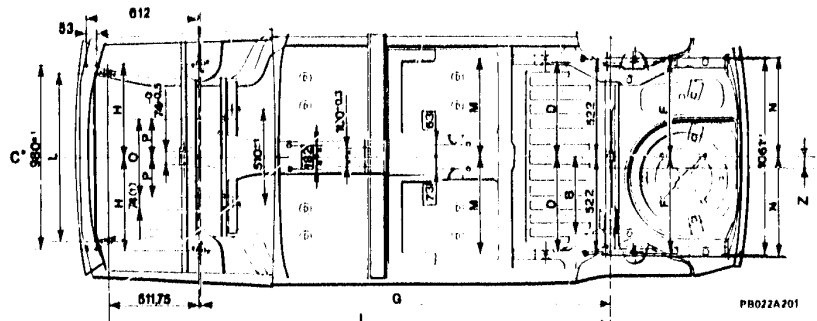

C* Longitudinal reference axis (vehicle centre line)

NOTE The dimensions marked with ☐ are specific for the 4x4 version only

Unit: mm

References and tolerances	B ± 0.5	D $^{-1}_{+2}$	F ± 2	G ± 1.5	H ± 1.5	I ± 1	L ± 0.75	M ± 1	N ± 2	O ± 1	P ± 3	Z
Body standard dimensions	405	502	507	2313.65 ☐ 2270.65	493.93	2826.7 ☐ 2783.75	691	519	535	392	196	☐ 50

B – From wheel centre line to Panhard bar
D – From vehicle centre line to lower shock absorber attachment
F – From vehicle centre line to upper shock absorber attachment
G – From inspection dowel hole to upper shock absorber attachment
H – From vehicle centre line to upper shock absorber attachment
I – From stabilizer bar attachment to inpection dowel hole
L – Wheel base of stabilizer bar attachments
M – From vehicle centreline to rear suspension lower tie rod attachment
N – From vehicle centreline to rear suspension upper tie rod attachment
O – Steering attachment wheelbase
P – From vehicle centre to steering attachment wheel base

(1) Specific for LH drive; for RH drive vehicles the above dimension is to be referred to the RH side of vehicle.

33 MODELS

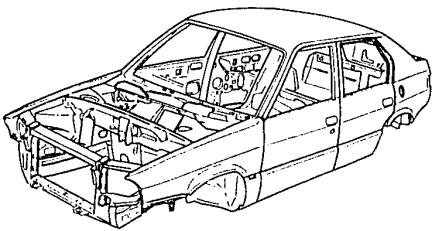

STANDARDS AND PRECAUTIONS

STANDARDS AND PRECAUTIONS

SAFETY MEASURES ..... 49 - 23
VEHICLES FITTED WITH ELECTRONIC CONTROL UNITS ..... 49 - 24
PROTECTION OF BODYWORK AND EXTERNAL COMPONENTS ..... 49 - 25
WELDING HINTS ..... 49 - 26
Spot welding ..... 49 - 26
MIG welding ..... 49 - 33

STANDARDS AND PRECAUTIONS

SAFETY MEASURES

1. Wear the correct protective clothing for each job.
2. If welding has to be done near the petrol tank, remove the tank from its housing and plug the filler.

- Plug loose fuel piping and brake fluid connections when removing pipe connections.
- After jacking up the vehicle, ensure that the correct safety supports are in position. To locate the jacking points, see "jacking points" - **GR** 00.
- Ensure that the battery ground cable has been disconnected before carrying out any type of repair work.

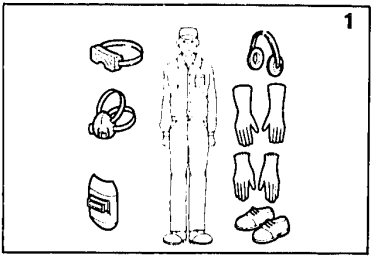

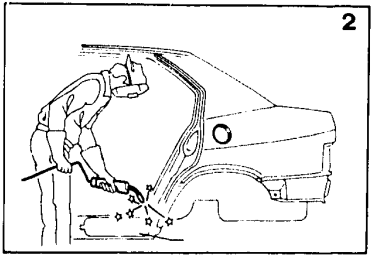

PA023A201

STANDARDS AND PRECAUTIONS

SAFETY MEASURES (continued)

- The environment should be well ventilated and lit, in order to guarantee safety to the personnel.
- As paints and sealants, when heated, can give off toxic gases, pneumatic hack-saws or chisels should be used in preference to oxy-hydrogen flames for cutting and removing damaged sections.
- To remove paint from the body sections use a belt grinder or a rotating brush.
- Ensure that straighteners are used correctly, according to the procedure laid down in the Instruction Manual published by the Makers of the Equipment.

1. Whilst using a straightener on the damaged body, never stay in front of the straightener in the direction in which it exerts traction.

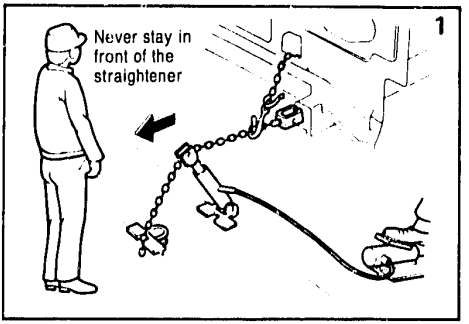

VEHICLES FITTED WITH ELECTRONIC CONTROL UNITS

When carrying out welding operations on vehicles equipped with electronic control units the control units must not be between the clamp and the electrode which should in any case be kept as close together as possible.

STANDARDS AND PRECAUTIONS (continued)

PROTECTION OF BODYWORK AND EXTERNAL COMPONENTS

1. Cover all glass, instruments, upholstery and carpets with heat resistant materials before carrying out any welding operations (this protection is particularly necessary if arc welding is carried out in a CO2 atmosphere).
- When removing external parts (hood, liftgate, moldings, finishing trim) the bodywork surfaces should be protected to avoid scratching, using cloths, protective tape or other materials.
- All painted surfaces should be kept in good repair, even if they are only scratched: the slightest of scratches may lead to further corrosion.

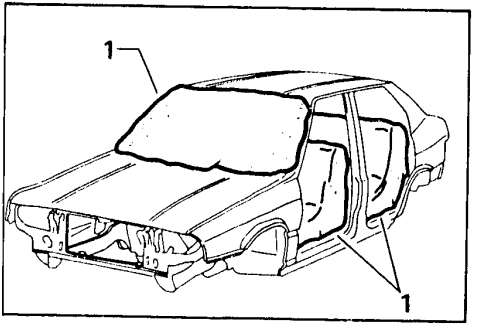

PA028A201

STANDARDS AND PRECAUTIONS (continued)

WELDING HINTS

Spot welding

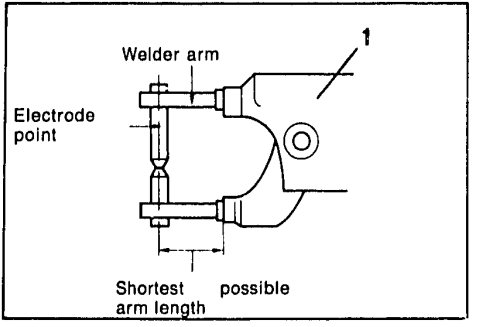

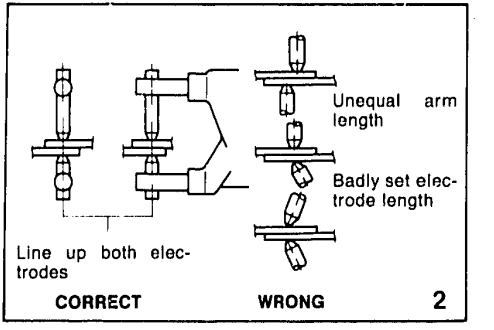

PA029A201

1. Spot welder.
   - Keep the arm as short as possible so that the maximum pressure can be applied between the spots.
   - The arm and the weld points should be held tightly, to prevent them from moving during the welding.
2. The points of the upper and lower electrodes should be linedup, to make the weld points good and strong.

WELDING HINTS
Spot welding (continued)

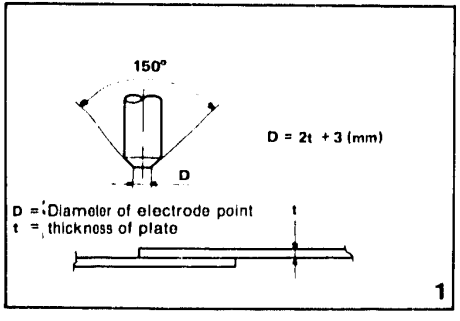

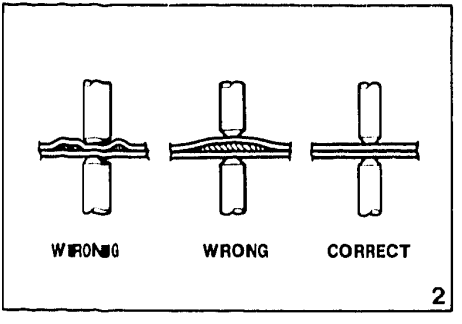

PA030A201

1. Ensure that the formula D = 2t + 3 (mm) is kept to, in order to make the welds sufficiently strong.s.
- Remove burnt deposits and foreign bodies from the points of the electrodes.
- Remove all impurities and foreign bodies (paint, dust, rust) from the surfaces to be welded.
2. Before starting to weld, match up the two surfaces, holding them in a vice, when necessary.

WELDING HINTS
Spot welding (continued)

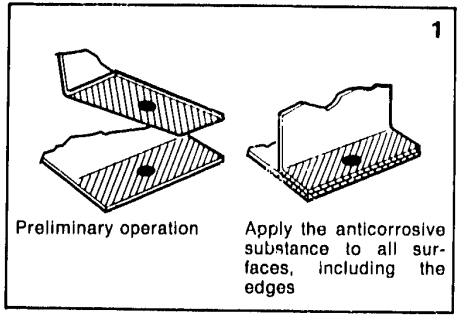

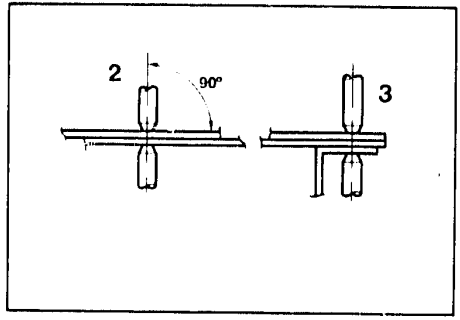

PA031A201

1. Coat the metallic surfaces to be welded with an anticorrosive highly conductive substance.
   This substance must also be applied around the edges of the parts to be welded.
2. Position the plate perpendicularly to the electrodes.
3. In zones where three or more plates are superimposed, the spot welding must be repeated a second time.

WELDING HINTS
Spot welding (continued)

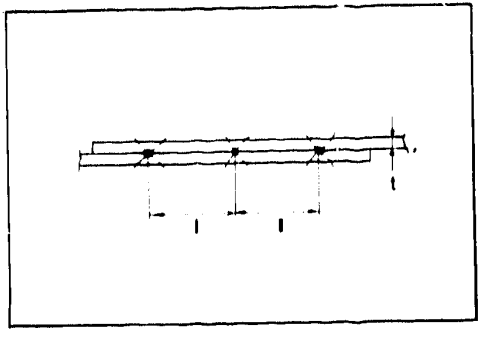

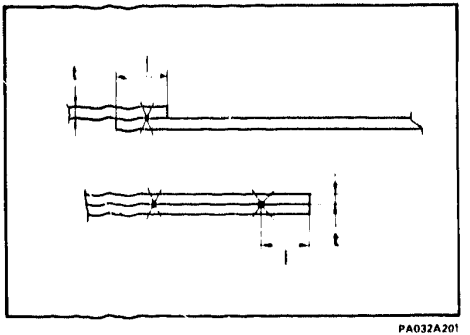

PA032A201

Thickness (t)	Min. distance (I) Unit: mm
0,6	10 or more
0,8	12 " "
1	18 " "
1,2	20 " "
1,6	27 " "
1,8	31 " "

Thickness (t)	Min. distance (I) Unit: mm
0,6	11 or more
0,8	11 " "
1	12 " "
1,2	14 " "
1,6	16 " "
1,8	17 " "

NOTE: If the welders used are of a lower potential than the ones of the Manufacturing Company it is recommended to increase the number of spots by 20 - 30%

WELDING HINTS
Spot welding (continued)

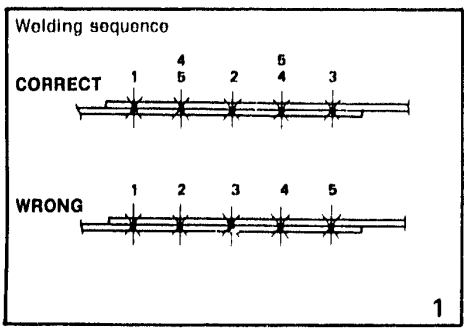

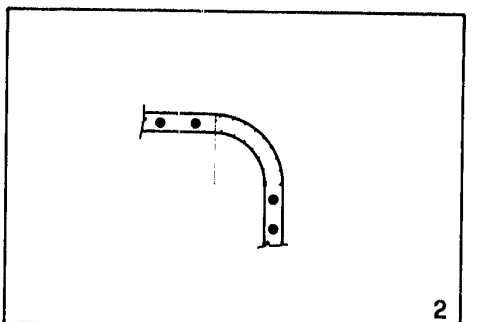

PA033A201

1. Do not weld in one direction only.
   - Stop welding whenever the points of the electrodes overheat and change colour, and allow them to cool down.
2. Do not weld on surfaces that are angular in shape.

WELDING HINTS
Spot welding (continued)

- Checking the welded zones:
  Two types of tests can be made on welded parts: visual and destructive. The second type of check should be made both before starting to weld, and on completion of the welding job.
  The weld spots should be equidistant from each other and positioned in the centre of the plate.
- Test to carry out before welding, using a test sample:
  Prepare test samples of the same thickness as the plate to be welded and secure them so that they are unable to slip away or move during the welding.
  Poceed with the welding.
  Separate the welded test samples by rotating them on the pivot of the welded spot and examine the break zone. The whole of the weld spot should stay on one of the two pieces, whilst at the corresponding point on the other piece there should be a circular opening.
  If this is not the case, the welding conditions are incorrect.
  Reset the pressure, welding current, current passage time and other welding conditions, then keep repeating the test until the best possible results are obtained.

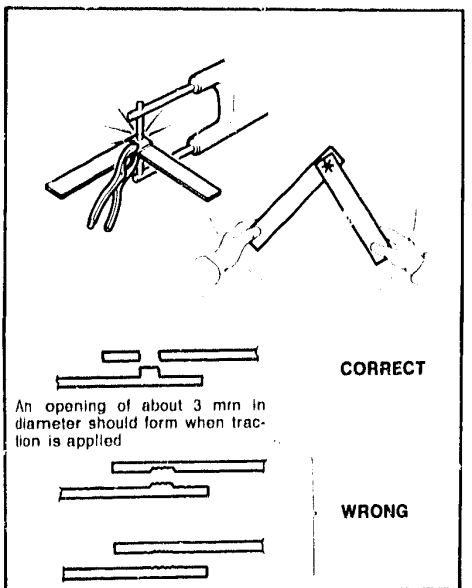

PA034A201

WELDING HINTS
Spot welding (continued)

- Test to carry out after welding, using a hammer and chisel:
  Insert the point of the chisel between the welded plates and hammer gently on the chisel until a gap of 3 - 4 mm forms between the plates; if there are no deformations in the weld, then the test result is positive.
  If the plates are of unequal thickness, the gap between the plates should be limited to 1.5 ÷ 2 mm.
  Remember that the above value is only a reference value.
  The gap described above will vary according to the positioning of the weld spots, the length of the flange, the thickness of the plate, the angle of the weld and other factors.
  These limits should not be exceeded, otherwise there will be a risk that some of the welded spots will come apart.
  After the test, ensure that the deformed part is repaired.

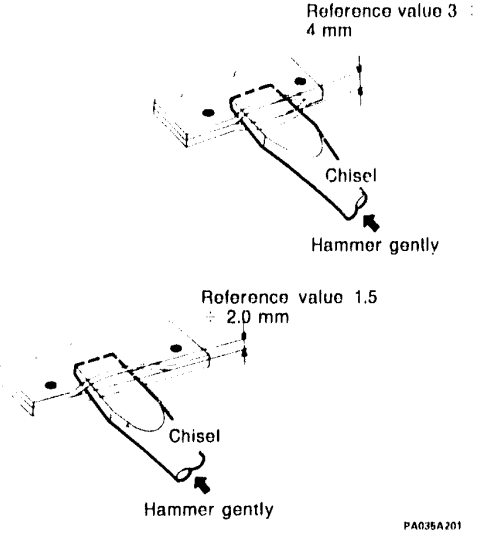

PA035A201

WELDING HINTS (continued)
MIG welding

- Remove any foreign body from the surface by grinding or brushing.
  Films of paint, rust or oil on the plate surface reduce the resistance of the weld, causing swelling.

1. Fill-welding (in pre-drilled holes).
   Make a hole of diameter 5 ÷ 6 mm in one of the two plates to be welded and hold the two plates together so they touch.
   Position the welding torch at a right-angle to the plate and proceed with welding the metal into the hole.
   Each time the welding is stopped, an oxide film forms on the surface, causing swelling. If this occurs, brush away the oxide with a brush

- Ensure that there is a perfect weld between the upper and lower plates.
- The test pocedure for the weld is basically the same as that described for the spot welding.

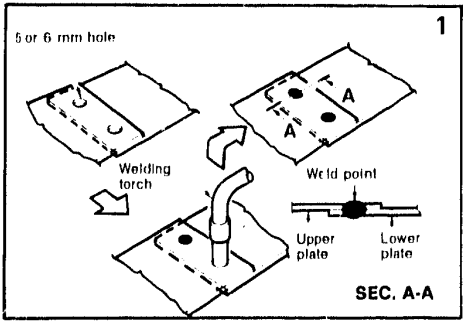

PA036A201

WELDING HINTS
MIG welding (continued)

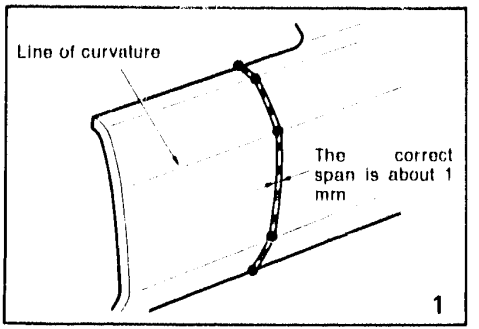

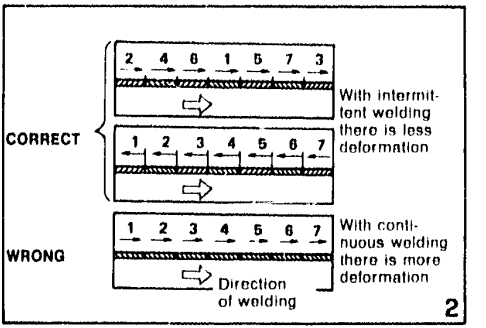

PA037A701

1. Butt welding:
   With intermittent welding, tack together the two surfaces to be welded to line up and hold the two surfaces, then fill up the empty spaces with small beads of welding.

2. Do not make the weld in a single bead, as this may cause deformations. Proceed as shown in the diagram to reduce the deformation.

WELDING HINTS
Mig welding (continued)

1. Before filling in the spaces between the beads of welding, level off the beads with a grinder, always going with the shape of the panel. If the surfaces of the beads are not levelled off, swelling may occur.

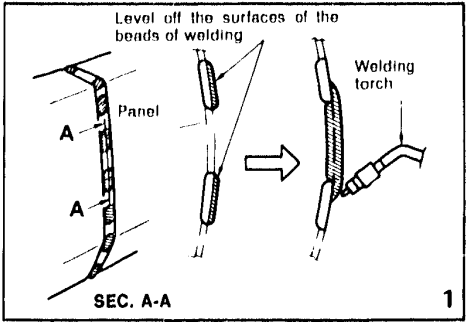

PA038A701

33 MODELS

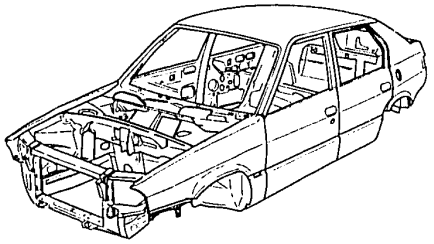

REPLACEMENTS

REPLACEMENTS

HOW TO USE THIS MANUAL ..... 49 - 36
SYMBOLS USED ..... 49 - 37
REMOVAL AND FITTING PROCEDURES ..... 49 - 39
Removal of parts ..... 49 - 39
Preparation of the edges to be welded ..... 49 - 42
Preparing for the fitting of new parts ..... 49 - 44
Fitting ..... 49 - 47

REPLACEMENTS

HOW TO USE THIS MANUAL

- The title gives the part to be replaced, specifying, if necessary, the particular operating conditions.
- All the information regarding the welding is given in the diagram that specifies the methods of welding and the number of weld points, together with the precise location of the weld points on the parts to be welded.

Example: 1◉(1)
- 1 — Number of weld points
- ◉ — Type of welding (see symbols used in table 49-37)
- (1) — Progressive number of the operation.

- The description of the removal and fitting includes a list of all the main operations to be carried out, with particular attention paid to the location of the areas to be cut, the choice of which tools to use and also the definition of which welding methods to use.

REPLACEMENTS (continued)

SYMBOLS USED

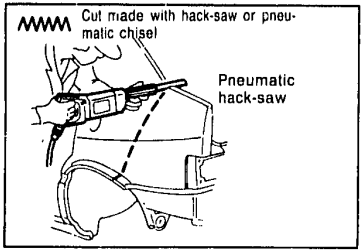

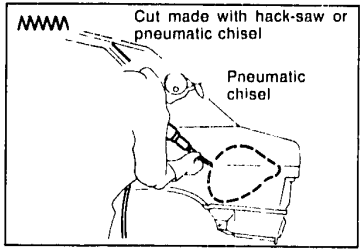

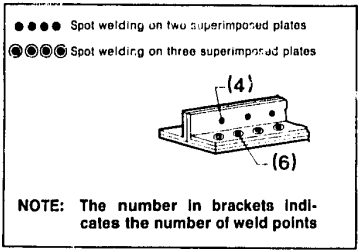

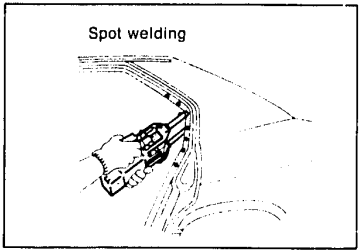

PA040IA201

- The symbols used in the descriptions of the cutting and welding/brazing operations are shown in the four diagrams.

REPLACEMENTS

SYMBOLS USED (continued)

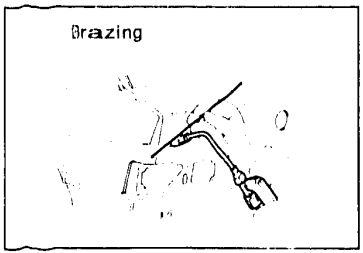

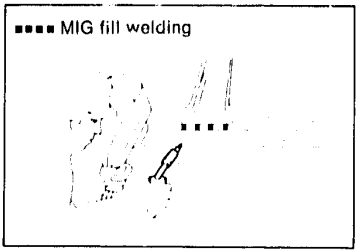

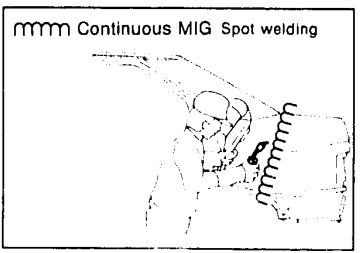

PA041A201

- The symbols used in the descriptions of the welding/brazing operations are shown in the three diagrams.

REPLACEMENTS (continued)

REMOVAL AND FITTING PROCEDURES

Removal of parts

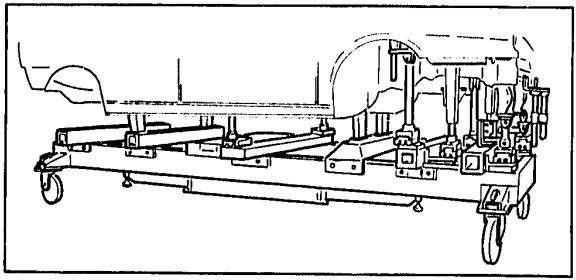

PA042A201

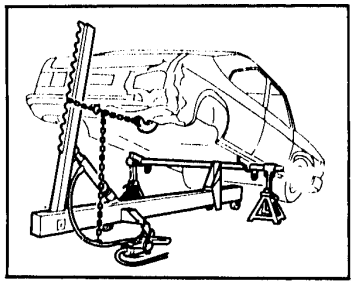

PA042A202

- Ensure that all the damaged parts have been found, refering to the main assembly standard measurements. Refer to the "Body Alignment" diagram

Tools needed:
- Centering tool
- Squaring tool
- Convex rule
- Straightener
- Template

- Put the body under traction, using equipment which corresponds to the degree of deformation. The re-use of recoverable parts must conform to the specifications laid down in "Body Alignment".

Suggested procedure:
Carefully attach the traction chain to the body and to the traction tool, in a way that avoids the possibility of accidental unhooking during the operation.
Apply the traction in the opposite way to the direction of the crash impact.

REMOVAL AND FITTING PROCEDURES
Removal of parts (continued)

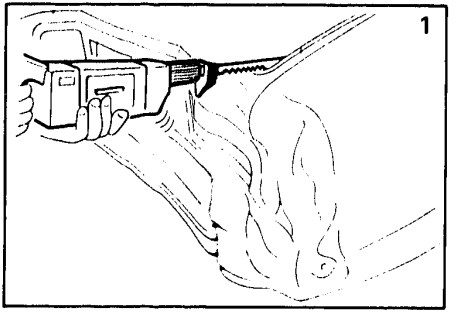

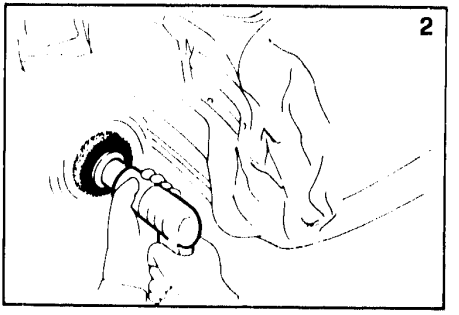

PA043A201

1. Cut away all the damaged parts
   Tools required:
   - Pneumatic saw
   - Pneumatic chisel

2. If the weld points are not visible, take off the paint with a wire brush.
   Tools needed:
   - Wire brush.



REMOVAL AND FITTING PROCEDURES

Removal of parts (continued)

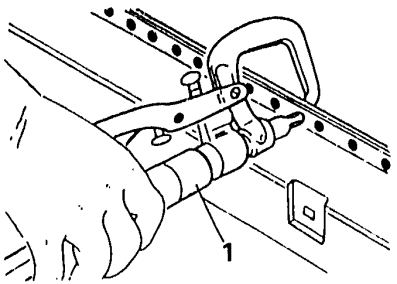

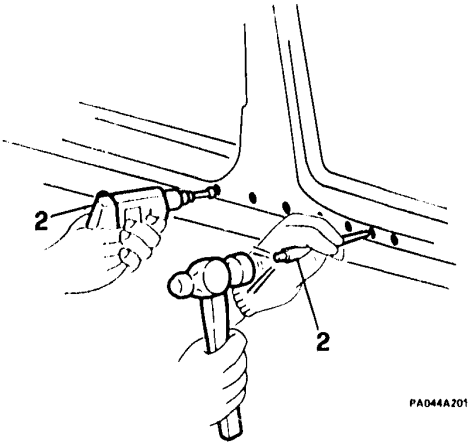

1. Remove all the weld points with a weld snipper.
2. If a weld snipper is not available, punch out the weld points and remove them with the point of a drill or another type of suitable tool.

Job hints:
Be careful not to make holes in the connecting parts.If holes have been made, close them by welding.
The presence of holes reduces the strength of the component, and may cause water leaks.

- Remove the remaining weld residue, using a chisel.

REMOVAL AND FITTING PROCEDURES (continued)

Preparation of the edges to be welded

1. Grind down the plate in the position of the weld points.
   Specific tools needed:
   - Pneumatic grinder
   - Disk grinder

Grinding hints:
Take care not to grind the underlying metal excessively: this will cause a thinning of the plate and, consequently, a reduction in the strength of the weld.

2. Thoroughly remove the metal dust from the surfaces that have been grinded and surrounding areas.
   The presence of metal dust reduces the efficiency of the weld and may cause corrosion.

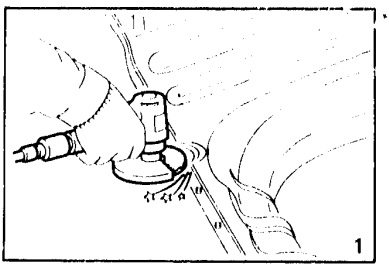

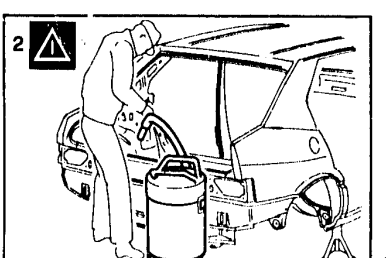

PA045A201

REMOVAL AND FITTING PROCEDURES

Preparation of the edges to be welded (continued)

1. Straighten out the deformed zone with a hammer and counter-block.
   Tools needed:
   - Hammer
   - Counter-block

Job hints:
Make sure that all the small deformations have been eliminated, particularly in hidden positions on the interior panels.a. If this is not done, problems may occur during the assembly operation, as well as causing a reduction in strength due to the concentration of stresses.

2. Remove the paint from the edges to be welded.
   Tools needed:
   - Belt grinder
   - Disk grinder

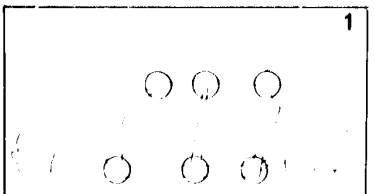

1

Thoroughly check the zones around each of the pillars.

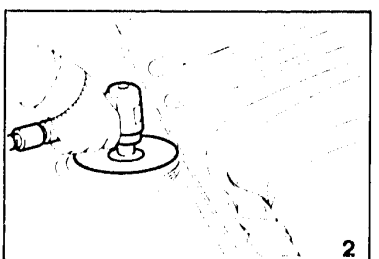

2

PA048A201

REMOVAL AND FITTING PROCEDURES (continued)

Preparing for the fitting of new parts

- Apply primer to the edges of the new part and to the body panels to be welded.
- Before welding, apply rustproof electroconductive paint to the edges of all the plates to be assembled (see TCS).

The welding of the plates should be carried out 15' after the application of the paint (the time needed for the drying of the film in the air).
The thickness of the film after drying should be 0.005 ÷ 0.025 mm.

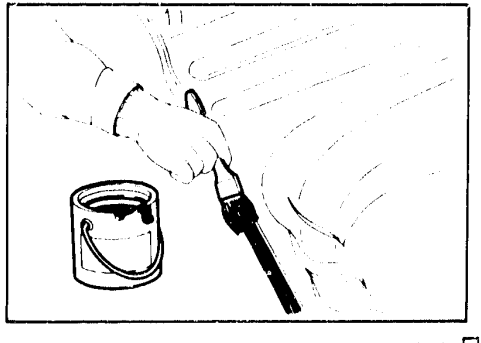

PA047A201

REMOVAL AND FITTING PROCEDURES

Preparing for the fitting of new parts (continued)

1. If a partial replacement is made, an overlap tolerance of about 50 mm should be maintained during the cutting away of the non usable plates, in order to have sufficiently large joining surfaces.
   Tools needed:
   - Pneumatic saw
   - Handsaw
   - Marker point
   - Convex rule (or equivalent)

   It is advised to use original spare parts in all cases. This will ensure good results in the repair work and will restore the vehicle to its previous functional state.
- For areas that cannot be reached with the spot welder, the MIG fill-welding method should be used.

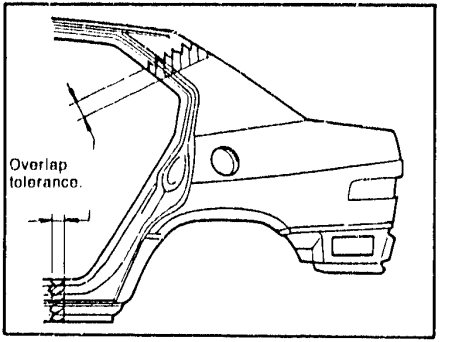

PA048A201

REMOVAL AND FITTING PROCEDURES

Preparing for the fitting of new parts (continued)

1. Remove the paint from the parts to be welded.
   Tools needed:
   - Belt grinder
   - Disk grinder

Job hints:
Remove the paint from both sides of the parts to be welded, from the surfaces to be spot welded, the areas around the spot welding and from the edges of the surfaces to be butt welded.
Paint residue will impede the flow of the current in the spot welding, making the weld point weak, and leading to depressions in the MIG fill welding.

2. Apply primer to the zones of the parts and body to be spot welded.
   Tools needed:
   - Brush
   - Rustproof electroconductive paint.

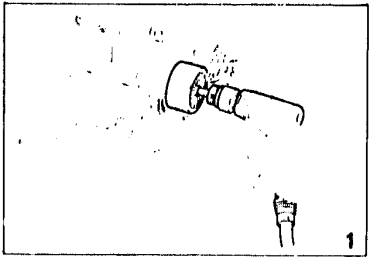

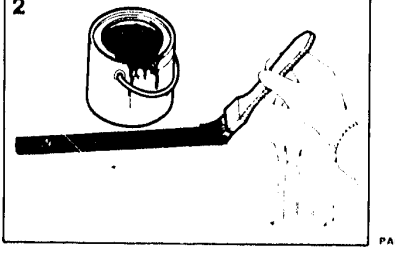

PA048A201

REMOVAL AND FITTING PROCEDURES (continued)

Fitting

- Provisional fitting of new parts.

Tools needed:

- Toggle-action clamp
- Convex scale
- Template
- Hydraulic jack
- Spot welder
- MIG welder

Job hints:
Position the parts as shown in the illustrations in "Body Alignment" (see tables 49-21 and 49-22). In the various body compartments, check all the mobile parts (such as windshield, doors, hood, liftgate) for span measurements, parallelism and alignment. If necessary, change the position of the plate to achieve the correct positioning. Clamp the parts to be welded with clamps and one or two weld spots.

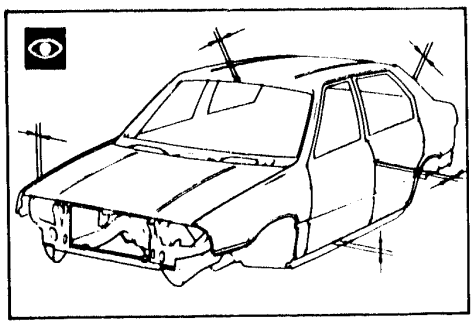

PA050A201

REMOVAL AND FITTING PROCEDURES

Fitting (continued)

1. Making the required welds.
   Make the welds, according to the standards described in "Welding hints"
   Tools needed:
   - Spot welder
   - MIG welder
   - Autogenous welder
2. Smooth down the MIG welding with a grinder.
   Tools needed:
   - Pneumatic grinder
   - Disk grinder

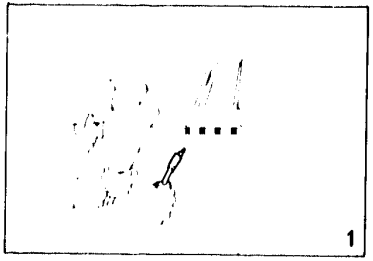

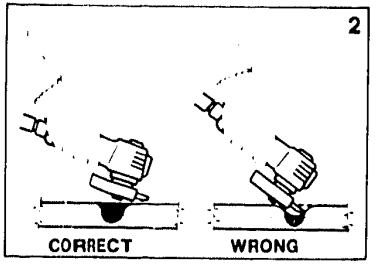

PA051A201

Job hints:
Do not grind the welds excessively, in order to avoid reducing the thickness of the plate, thus reducing its resistance.
Remove the metal dust from the surfaces that have been smoothed down and from the surrounding areas.
The presence of dust can reduce the effectiveness of the weld and may cause corrosion.

REMOVAL AND FITTING PROCEDURES
Fitting (continued)

1. After making the welds, remove the clamps used for clamping the edges and remove any dents that they may have caused.

Apply anti-corrosion protection to the welded parts.
Apply sealant to the joints.
This operation should be performed carefully to prevent the onset of corrosion in the welded joints.
Refer to the illustrations in "Body Sealing"

2. Apply a 4 mm coat of underbody protection(see TCS).

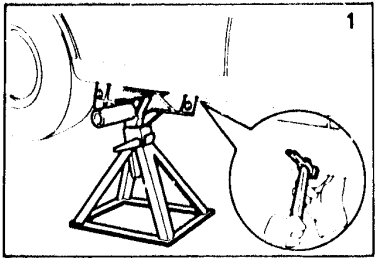

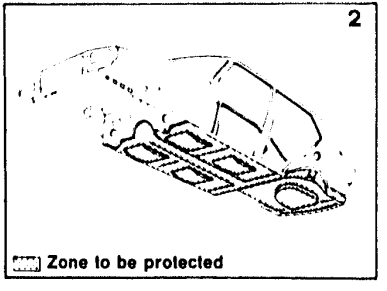

PA052A201

33 MODELS

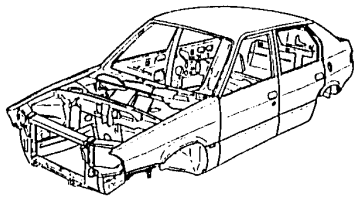

REPLACEMENTS (continued)

REPLACEMENTS

FRONT FENDER ..... 49 - 50
Removal and fitting ..... 49 - 50
UPPER FRONTAL ASSEMBLY ..... 49 - 51
Removal ..... 49 - 51
Fitting ..... 49 - 52
LOWER FRONT CROSSMEMBER ..... 49 - 53
Removal ..... 49 - 53
Fitting ..... 49 - 54
LOWER SIDE PANEL (WITH FRONTAL ASSEMBLY REMOVED) ..... 49 - 55
Removal ..... 49 - 55
Fitting ..... 49 - 56
UPPER SIDE PANEL (WITH FRONTAL ASSEMBLY Y REMOVED) ..... 49 - 57
Removal ..... 49 - 57
Fitting ..... 49 - 58
SIDE PANEL (WITH FRONTAL ASSEMBLY REMOVED) ..... 49 - 59
Removal ..... 49 - 59
Fitting ..... 49 - 60
FRONT SIDERAIL (WITH SIDE PANEL REMOVED) ..... 49 - 61
Removal ..... 49 - 61
Fitting ..... 49 - 62
CENTRAL PILLAR ..... 49 - 63
Removal ..... 49 - 63
Fitting ..... 49 - 64

REPLACEMENTS (continued)

FRONT FENDER

Removal and fitting

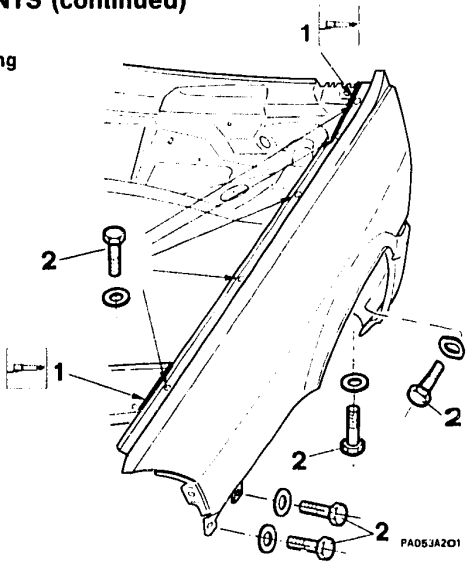

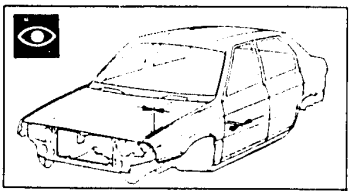

PA05JA202

1. Remove the sealant.
2. Unscrew the guide screws from the points shown.

When re-fitting, apply sealant immediately before installing the fender.

UPPER FRONTAL ASSEMBLY

Removal

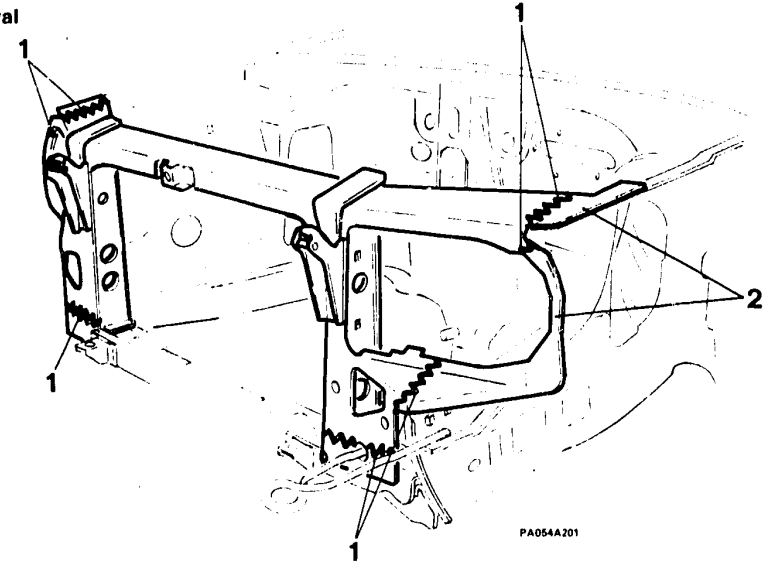

1. Cut with pneumatic saw.
2. Take off points and remove the remaining parts.

UPPER FRONTAL ASSEMBLY (continued)

Fitting

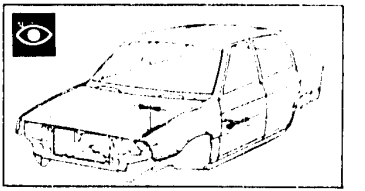

PA053A202

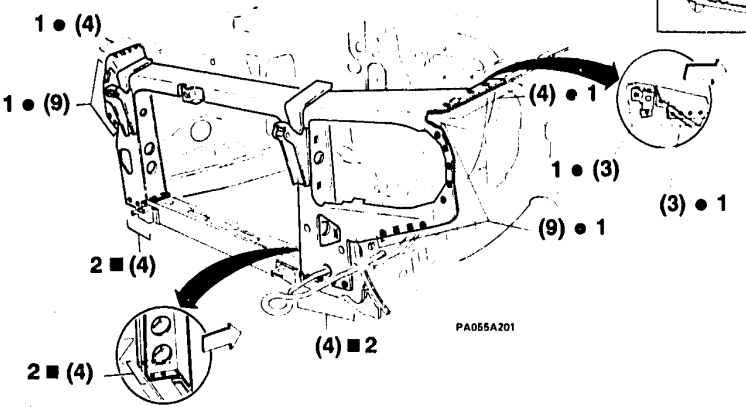

PA055A201

(⇦) **Direction**

- Position the new frontal assembly and attach provisionally with clamps.
- Spot weld the provisionally installed parts.
- Apply electroconductive PRIMER to the connecting edges.

1. Spot weld.
2. Fill weld.

LOWER FRONT CROSSMEMBER

Removal

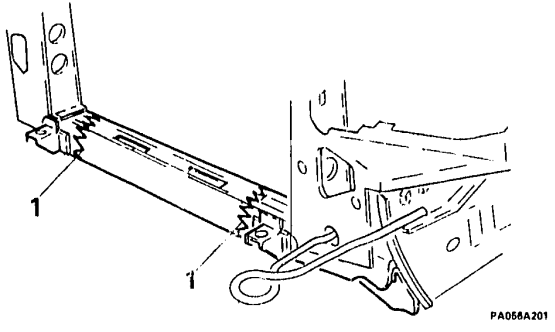



1. Cut with pneumatic saw.
- Take off points and remove the remaining part.

LOWER FRONT CROSSMEMBER (continued)

Fitting

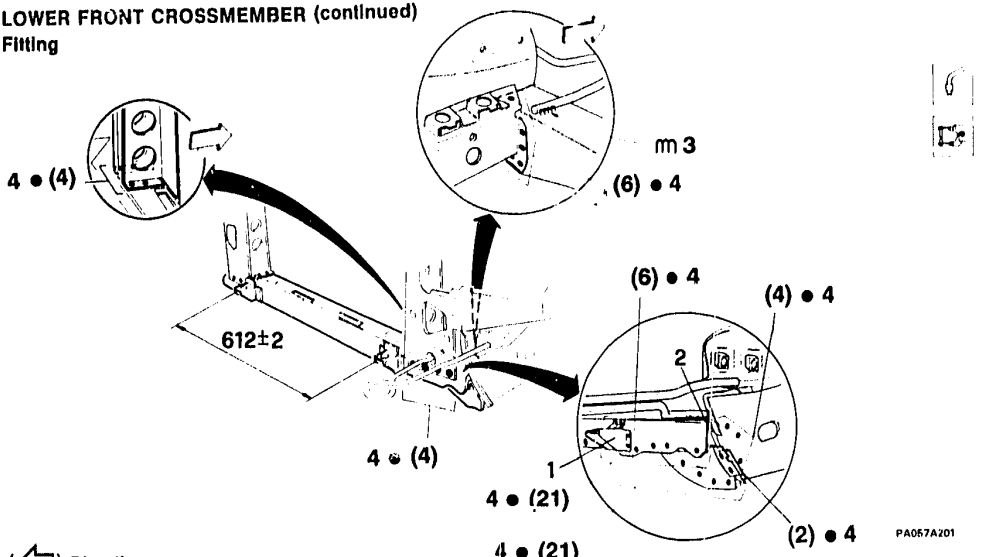

(⇦) Direction

- Apply electroconductive PRIMER to the connecting parts.

1. The welding of the radiator supports can be done on a work bench, keeping to the standard measurements in all cases.
2. The crossmember attachment welding should be done last of all.
3. Arc weld.
4. Spot weld.

LOWER SIDE PANEL (WITH FRONTAL ASSEMBLY REMOVED)

Removal

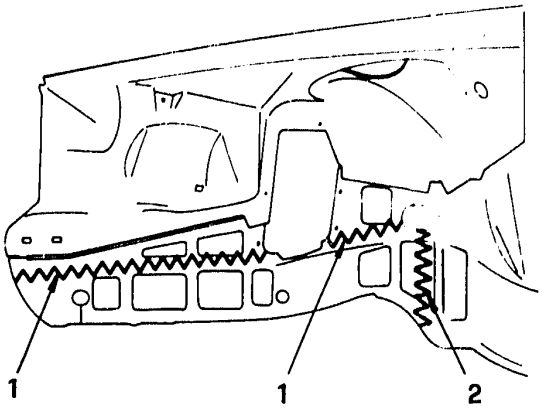

1. Cut with pneumatic saw.
2. Cut with pneumatic chisel.

- Take off points and remove the the remaining part of the upper side panel.

LOWER SIDE PANEL (WITH FRONTAL ASSEMBLY REMOVED)(continued)

Fitting

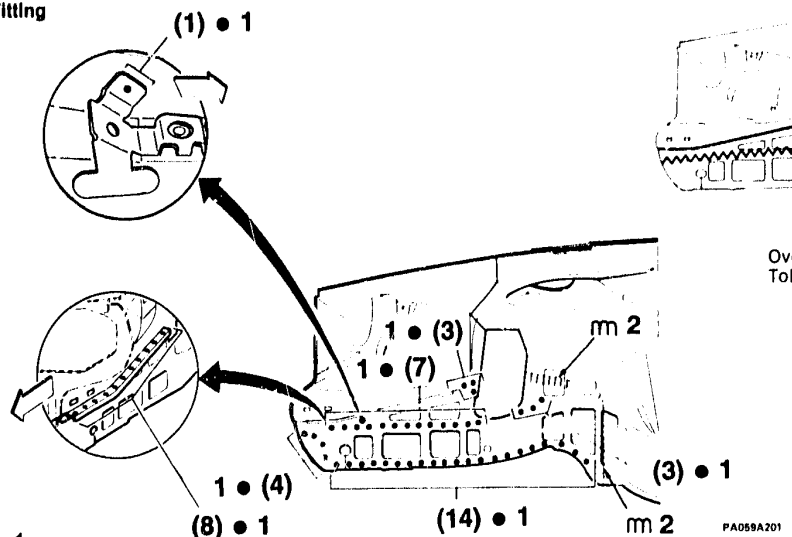

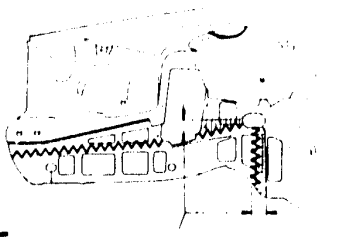

(⇦) Direction

- Install the frontal assembly and the side panel together, then check the squaring of the side panel against the standard dimensions.
  Refer to the illustrations in "Body Alignment", table 49-21.

1. Spot weld.
2. Arc weld.

UPPER SIDE PANEL (WITH FRONTAL ASSEMBLY REMOVED)

Removal

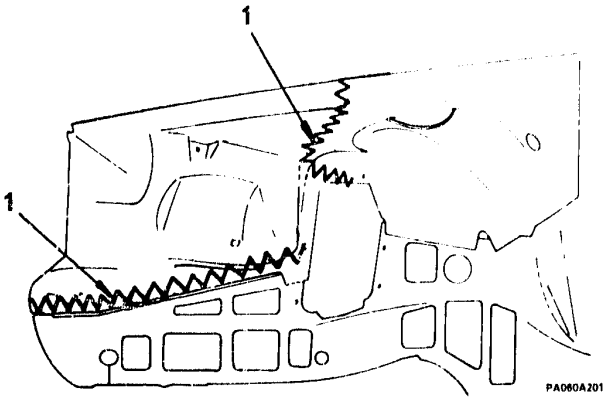

1. Cut with pneumatic saw.

- Take off weld points and remove the remaining part on the lower side panel.

UPPER SIDE PANEL (WITH FRONTAL ASSEMBLY REMOVED) (continued)

Fitting

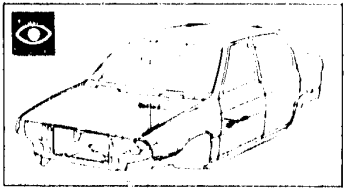

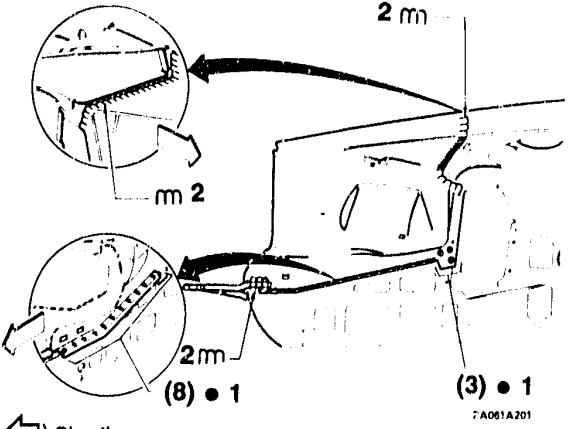

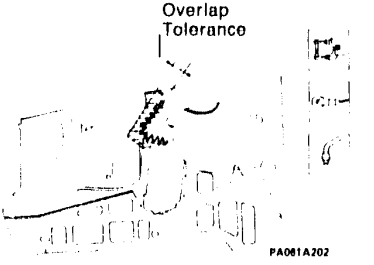

(⇦) Direction.

- Cut the replacement side panel in line with the panel it is to be attached to.
- Provisionally fit together the frontal assembly, side panels and body, and check the alignment against the "Body Alignment" illustrations, table 49-21.

1. Spot weld.
2. Weld with continuous weld.

SIDE PANEL (WITH FRONTAL ASSEMBLY REMOVED)

Removal

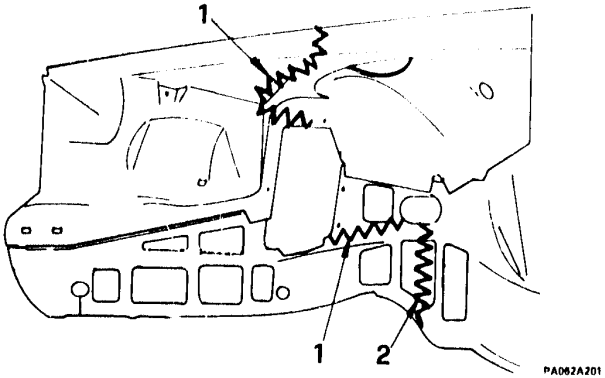

1. Cut with pneumatic saw.
2. Cut with pneumatic chisel

SIDE PANEL (WITH FRONTAL ASSEMBLY REMOVED) (continued)
Fitting

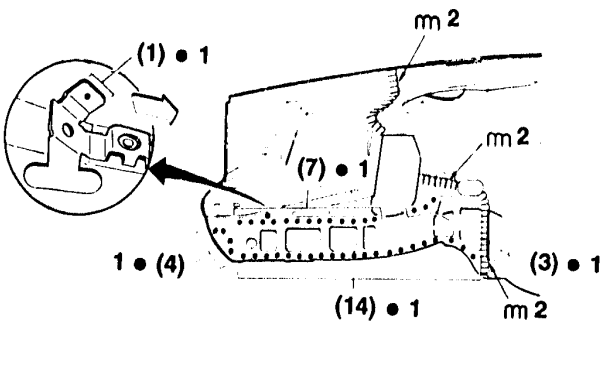

PA063A201

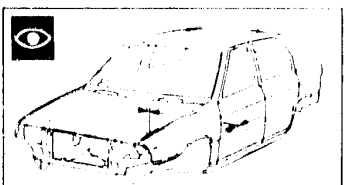

PA063A202

Overlap tolerance

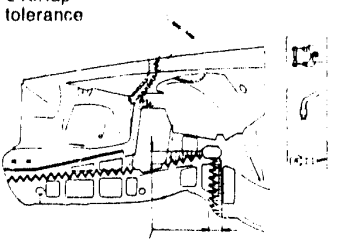

PA063A202

Overlap tolerance

(⇦) Direction

- Cut the replacement side panel in line with the panel it is to be attached to.
- Provisionally fit the frontal assembly and the side panel to the body, then check the alignment against the "Body Alignment" illustrations, table 49-21.

1. Spot weld.
2. Arc weld.

FRONT SIDERAIL (WITH SIDE PANEL REMOVED)

Removal

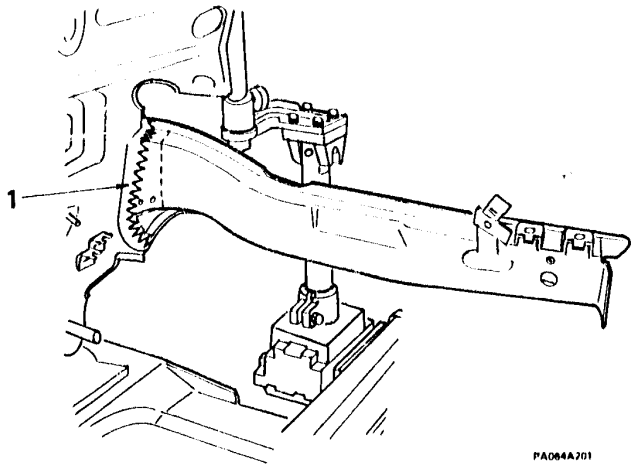

1. Cut with pneumatic saw, taking care to stay near to the reinforcement.

FRONT SIDERAIL (WITH SIDE PANEL REMOVED) (continued)

Fitting

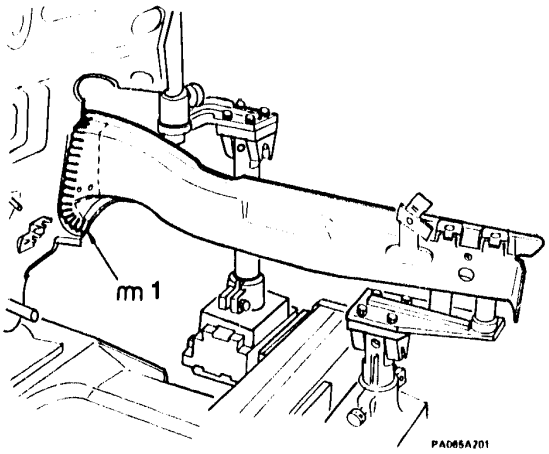

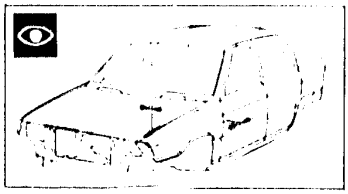

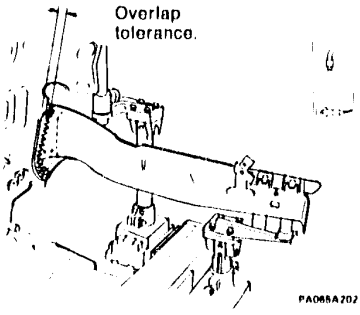

- Cut the replacement siderail and line it up with the corresponding part of the siderail it is to be attached to.
- Position the longitudinal member in on a template.
- Spot weld the parts for a temporary fitting.

1. Arc weld.

CENTRAL PILLAR
Removal

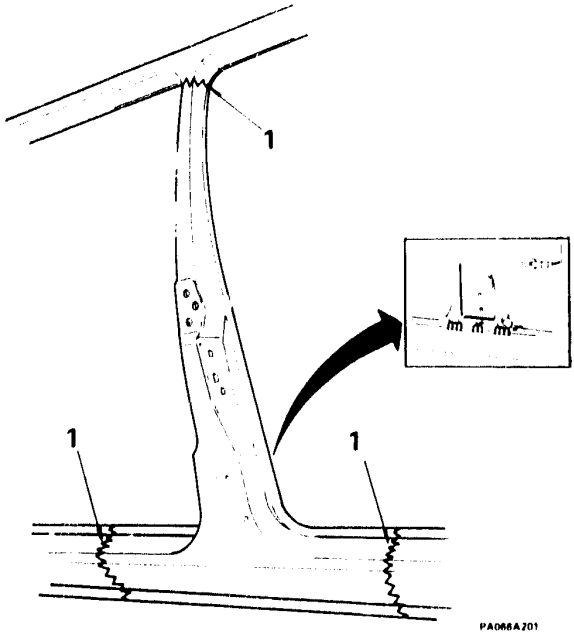

1. Cut with pneumatic saw

CENTRAL PILLAR (continued)

Fitting

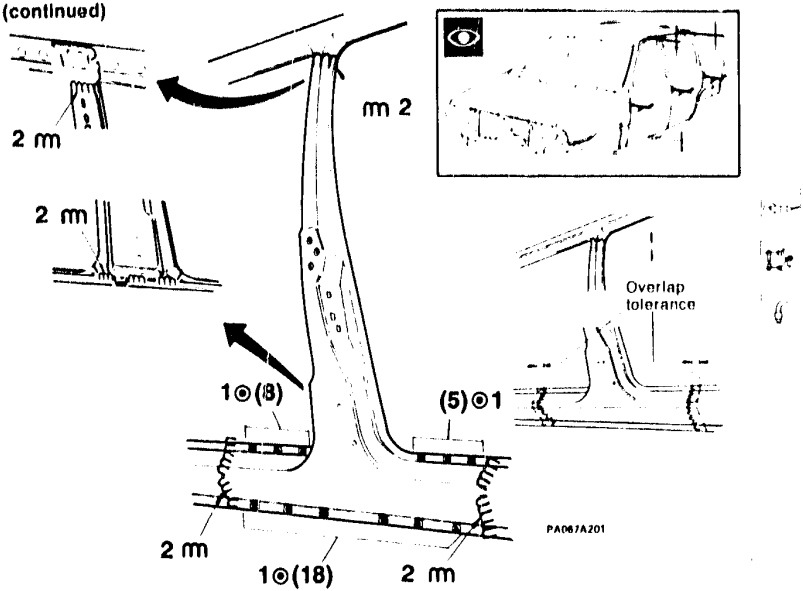

- Cut the replacement pillar, line it up with the pillar it is to be attached to.
- Attach the pillar provisionally with clamps and check the alignment of the parts.
- Provisionally attach the front and rear parts.

1. Spot weld.
2. Arc weld.

33 MODELS

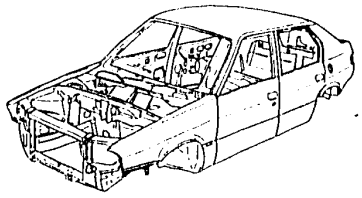

REPLACEMENTS (continued)

REPLACEMENTS

FRONT PILLAR ..... 49 - 65
Removal ..... 49 - 65
Fitting ..... 49 - 66
DOOR SUBPANEL ..... 49 - 67
Removal ..... 49 - 67
Fitting ..... 49 - 68
DOOR SUBPANEL (PARTIAL REPLACEMENT) ..... 49 - 70
Removal ..... 49 - 70
Fitting ..... 49 - 71
REAR FENDER ..... 49 - 73
Removal ..... 49 - 73
Fitting ..... 49 - 74
REAR WHEEL HOUSE ..... 49 - 76
Removal and fitting ..... 49 - 76
LOWER TAIL PANEL (4x2 version only) ..... 49 - 77
Removal ..... 49 - 77
Fitting ..... 49 - 78
REAR FLOOR REAR CROSSMEMBER WITH BOX PANELS REMOVED (4x4 version only) ..... 49 - 79
Removal ..... 49 - 79
Fitting ..... 49 - 80

FRONT PILLAR
Removal

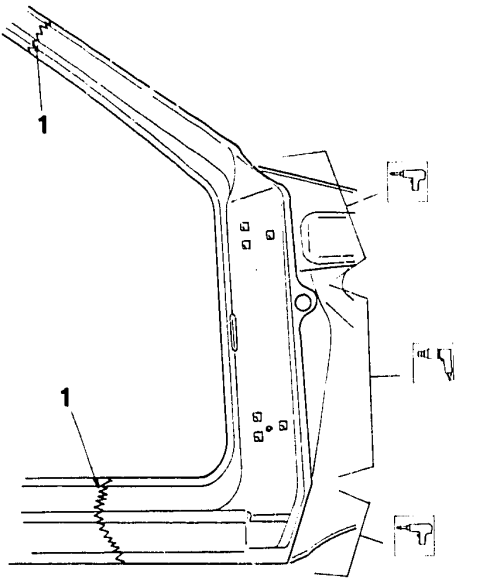

1. Cut with pneumatic saw.

FRONT PILLAR (continued)
Fitting

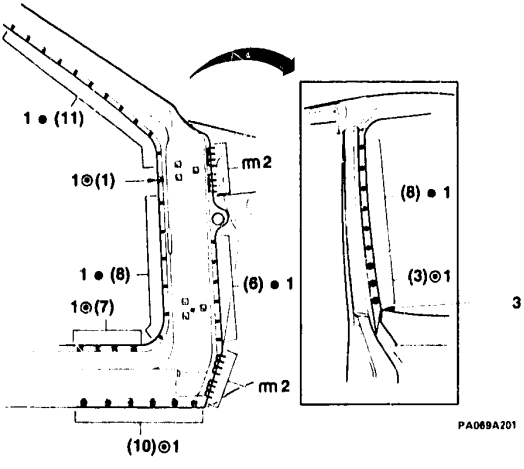

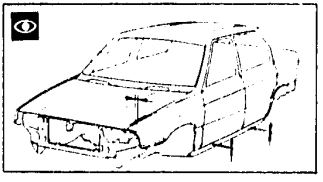

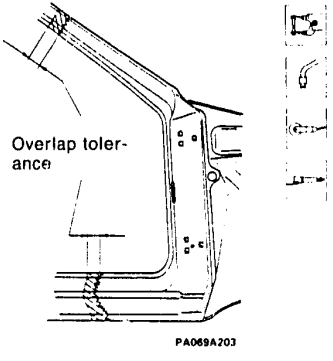

- Cut the replacement pillar and line it up with the attachment knobs.

1. Spot weld.
2. Arc weld.
3. Braze where indicated.

DOOR SUBPANEL
Removal

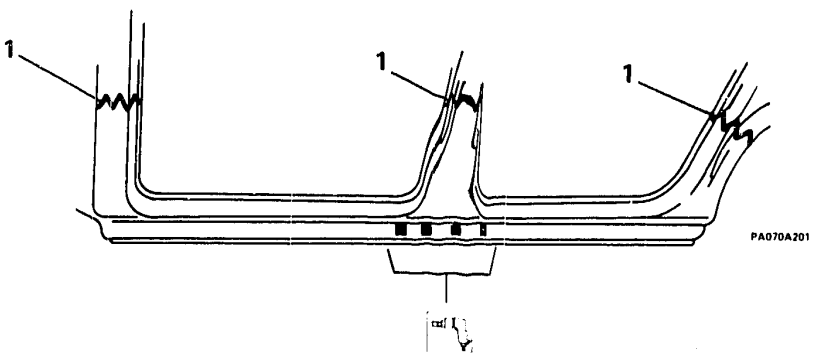

1. During the cutting operation, take care not to damage the underlying framework.

DOOR SUBPANEL (continued)
Fitting

Overlap tolerance.



PA071A202

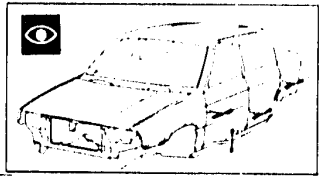

PA071A203

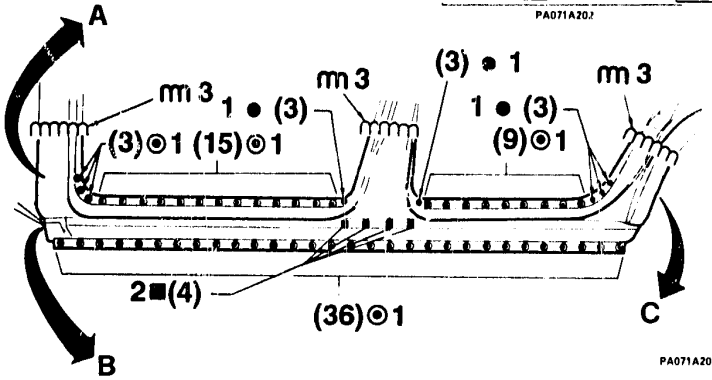

PA071A201

- Cut the replacement panel and line it up with the panel it is to be attached to.
1. Spot weld.
2. Make holes and fill weld.
3. Arc weld.

DOOR SUBPANEL
Fitting (continued)

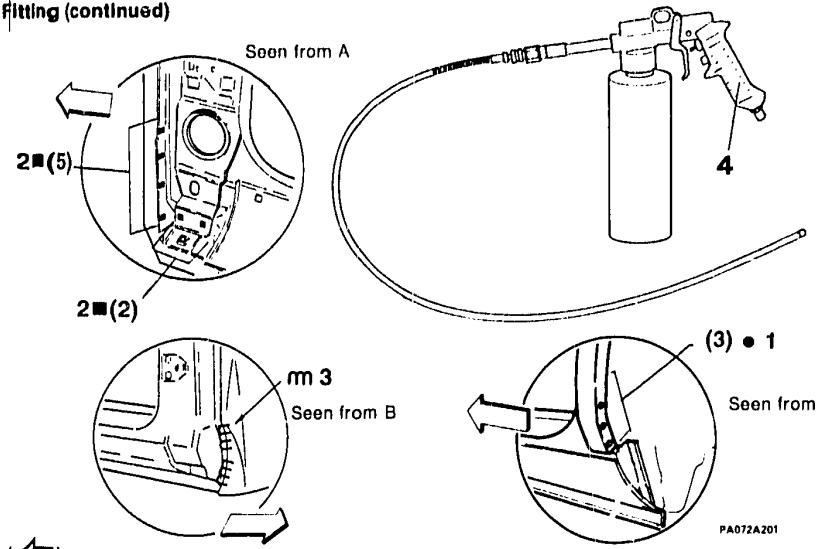

(⇦) Direction

1. Spot weld.
2. Fill weld.
3. Arc weld.
4. Apply an anti-corrosive product to the interior of the box panel.

DOOR SUBPANEL (PARTIAL REPLACEMENT)

Removal

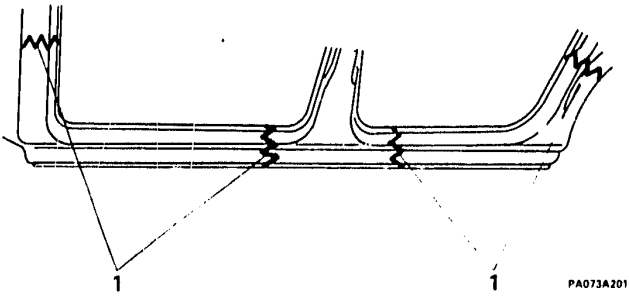

1. During the cutting operation, take care not to damage the underlying framework.

DOOR SUBPANEL (PARTIAL REPLACEMENT) (continued)

Fitting

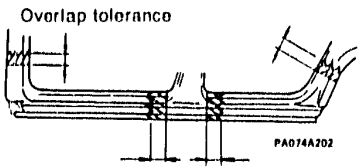

PA074A202

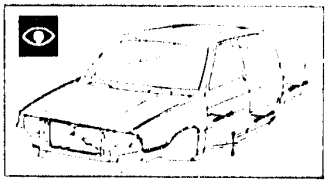
PA074A203

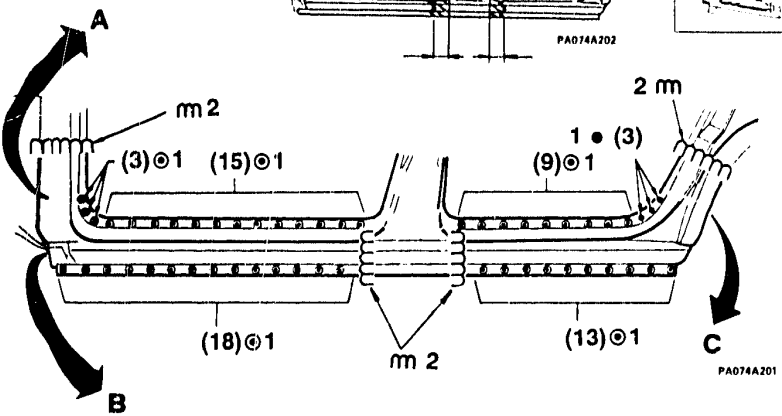

PA074A201

- Cut the replacement door subpanel and line it up with the panels it is to be attached to.

1. Spot weld.
2. Arc weld.

DOOR SUBPANEL (PARTIAL REPLACEMENT)

Fitting (continued)

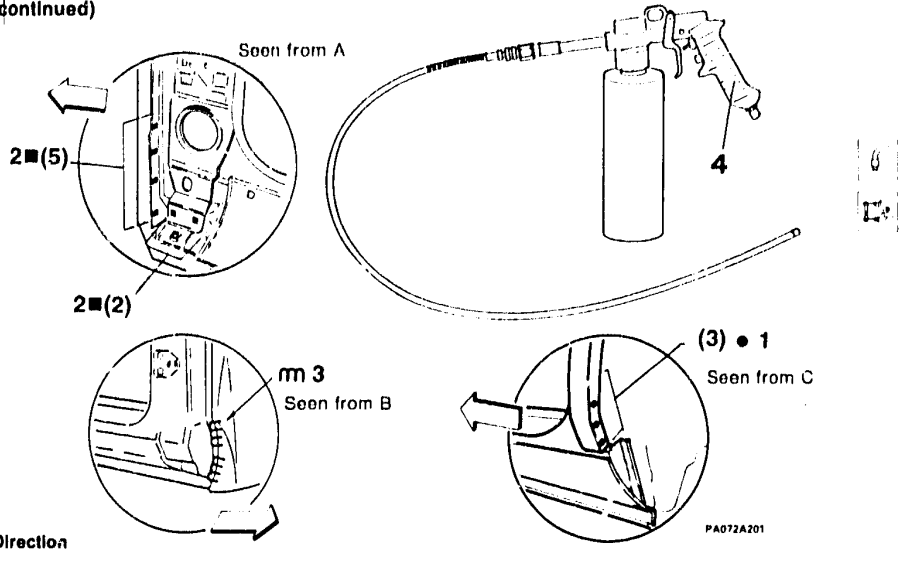

(⇦) Direction

1. Spot weld.
2. Fill weld.
3. Arc weld.
4. Apply an anti-corrosive product to the interior of the box panel.

REAR FENDER
Removal

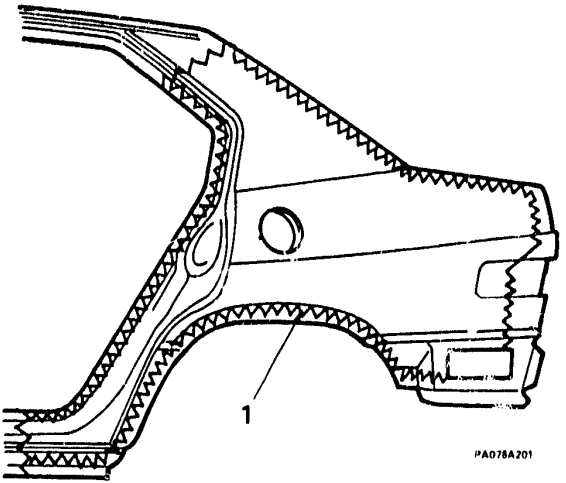

1. During the cutting operations take care not to damage the underlying framework.

REAR FENDER (continued)
Fitting

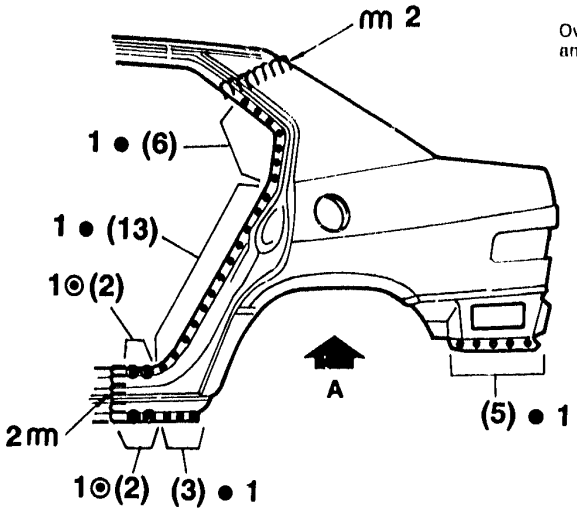

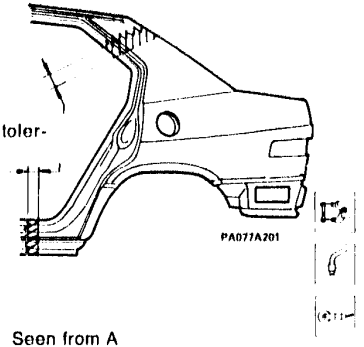

Seen from A

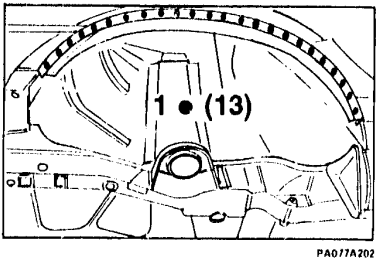

Cut the replacement fender and line it up with the panel it is to be attached to.

1. Spot weld.
2. Arc weld.

REAR FENDER
Fitting (continued)

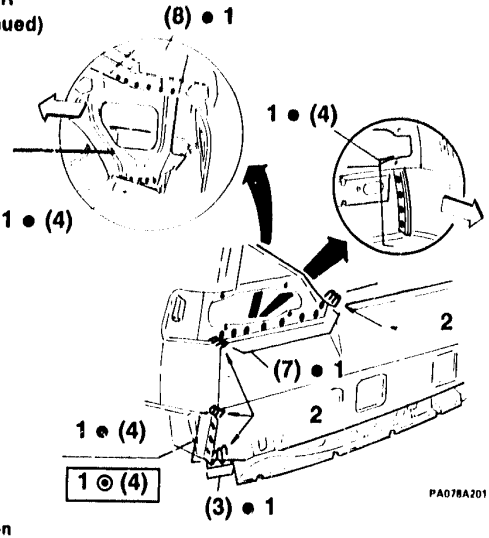

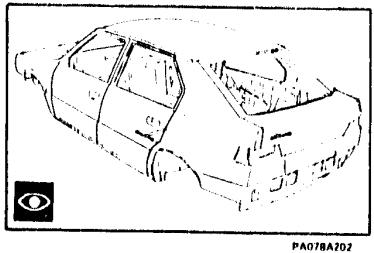
PA078A202

(⇦) **Direction**

(▭) **4x4 version only**

1. Spot weld.
2. Braze the indicated zones.

- Provisionally install the rear fender and the nearby parts, such as doors and liftgate.

Seal the zone around the wheelhouse fender.

REAR WHEELHOUSE
Removal and fitting

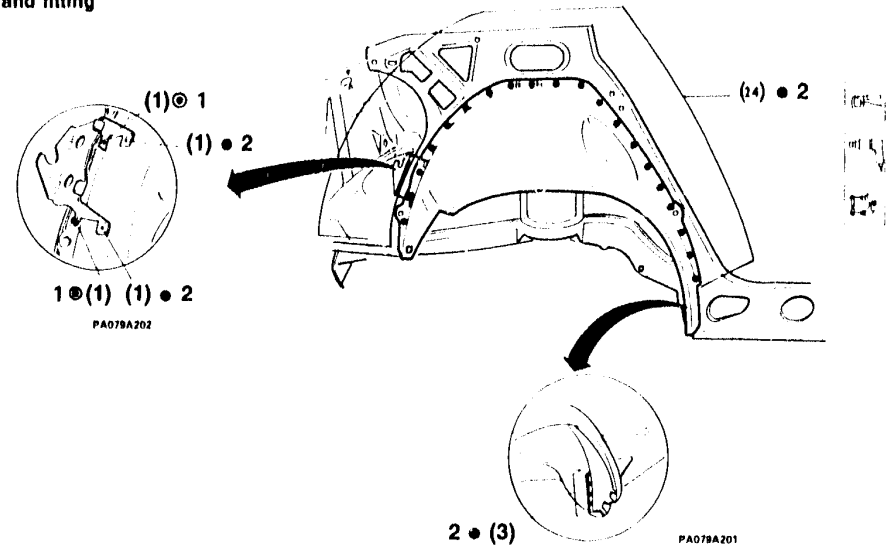

- To remove the wheelhouse it is enough to remove the weld points. No further undrcutting is necessary.

1. Spot weld the wheelhouse and then weld on the vehicle jack support.
2. Spot weld.

LOWER TAIL PANEL (4x2 version only)

Removal

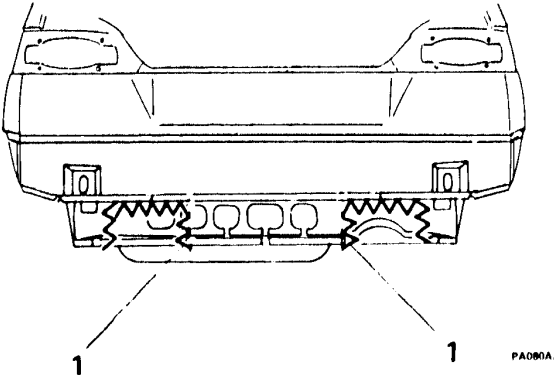

1. During the cutting operations take care not to damage the underlying framework.

LOWER TAIL PANEL (4x2 version only) (continued)
Fitting

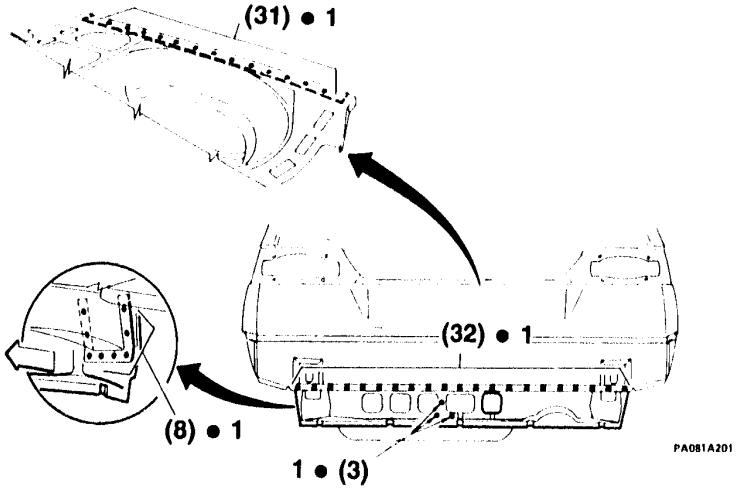

(⇦) Direction

1. Spot weld.

REAR FLOOR REAR CROSSMEMRER WITH BOX PANELS REMOVED
(4x4 version only)
Removal

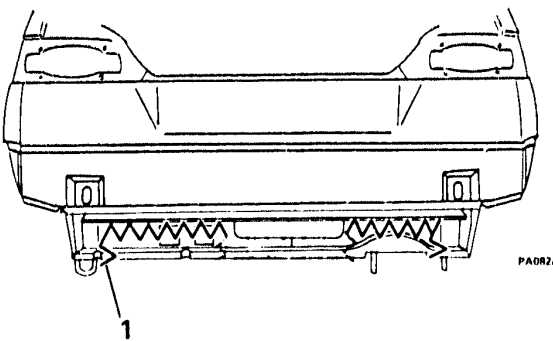

1. During the cutting operations take care not to damage the underlying framework.

REAR FLOOR REAR CROSSMEMBER WITH BOX PANELS REMOVED (continued)
(4x4 version only)
Fitting

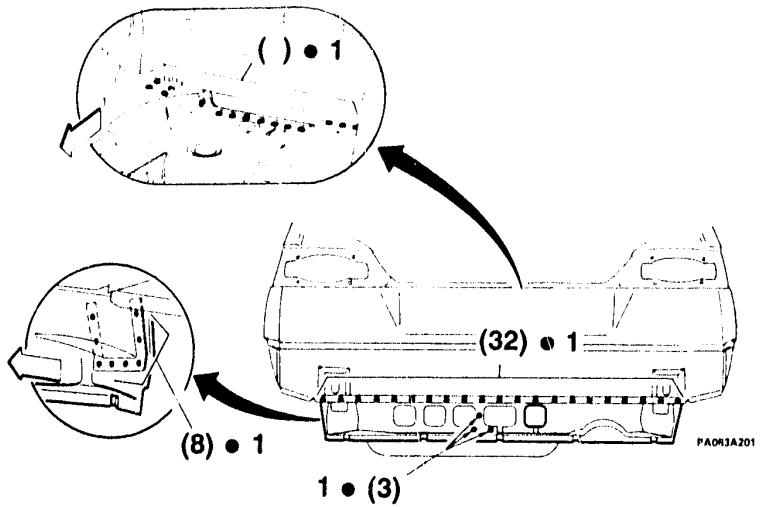

(⇦) Direction

1. Spot weld.

33 MODELS

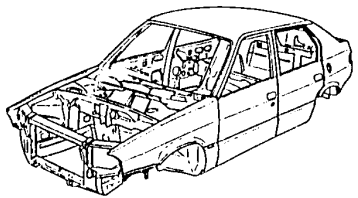

REPLACEMENTS (continued)

REPLACEMENTS

UPPER TAIL PANEL ..... 49 - 81
Removal ..... 49 - 81
Fitting for 4x2 versions ..... 49 - 82
Fitting for 4x4 versions ..... 49 - 83
INTERIOR LEFT SIDE PANEL WITH TAIL ASSEMBLY REMOVED
(4x4 version only) ..... 49 - 84
Removal ..... 49 - 84
Fitting ..... 49 - 85
INTERIOR RIGHT SIDE PANEL WITH TAIL ASSEMBLY REMOVED
(4x4 versions only) ..... 49 - 86
Removal ..... 49 - 86
Fitting ..... 49 - 87
REAR PART OF REAR FLOOR WITH TAIL ASSEMBLY REMOVED
(4x2 version only) ..... 49 - 88
Removal ..... 49 - 88
Fitting ..... 49 - 89
REAR PART OF REAR FLOOR WITH TAIL ASSEMBLY REMOVED
(4x4 version only) ..... 49 - 91
Removal ..... 49 - 91
Fitting ..... 49 - 92

UPPER TAIL PANEL

Removal

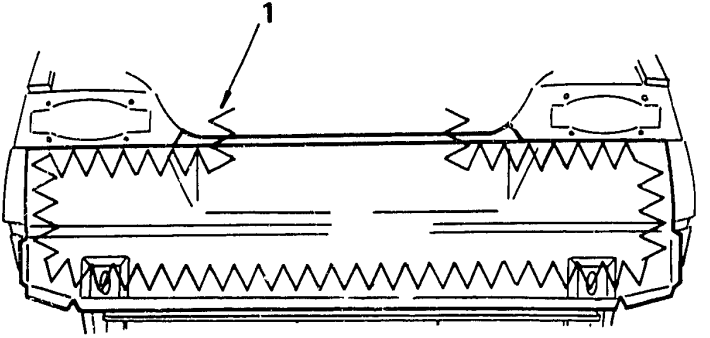

PA084A201

1. Cut with pneumatic saw.

UPPER TAIL PANEL (continued)
Fitting for 4x2 versions

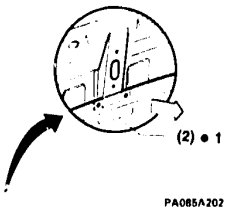

PA085A202

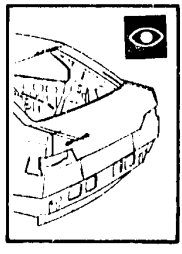
PA085A204

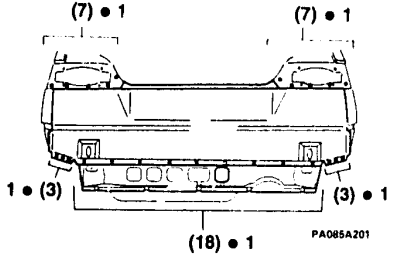

PA085A201

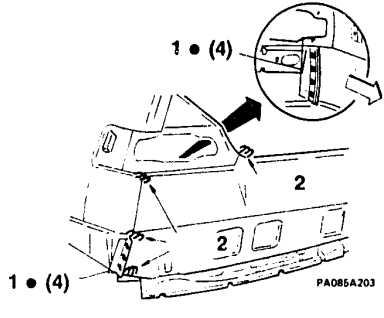

PA085A203

(⇦) **Direction**

1. Spot weld.
2. Brase the zones indicated.

UPPER TAIL PANEL (continued)

Fitting for 4x4 versions

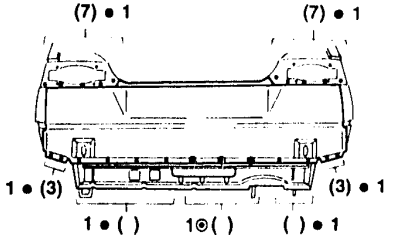

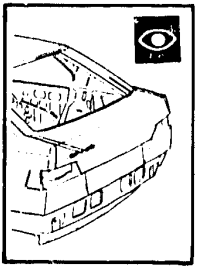

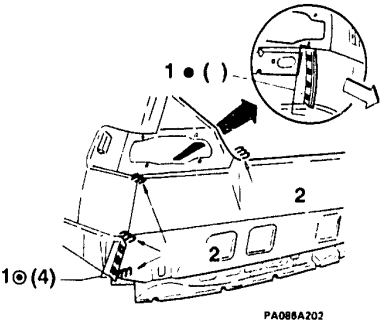

(⇦) **Direction**

NOTE: For removal see table 49 79.

1. Spot weld.
2. Braze the indicated zones with brass wire.

INTERIOR LEFT SIDE PANEL WITH TAIL ASSEMBLY REMOVED
(4x4 version only)
Removal

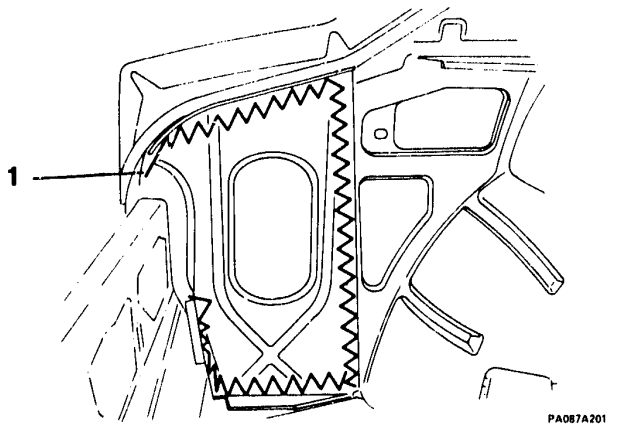

1. Cut with pneumatic saw.

INTERIOR LEFT SIDE PANEL WITH TAIL ASSEMBLY REMOVED (continued)
(4x4 version only)
Fitting

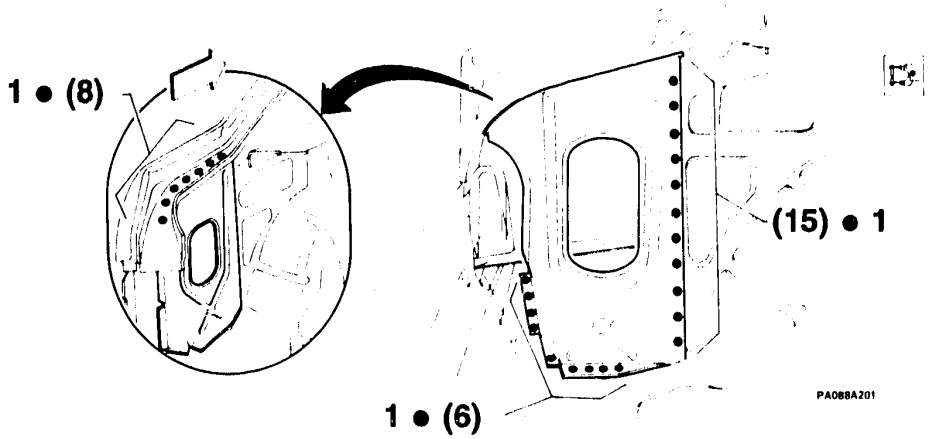

(⇦) **Direction**

1. Spot weld.

INTERIOR RIGHT SIDE PANEL WITH TAIL ASSEMBLY REMOVED
(4x4 version only)
Removal

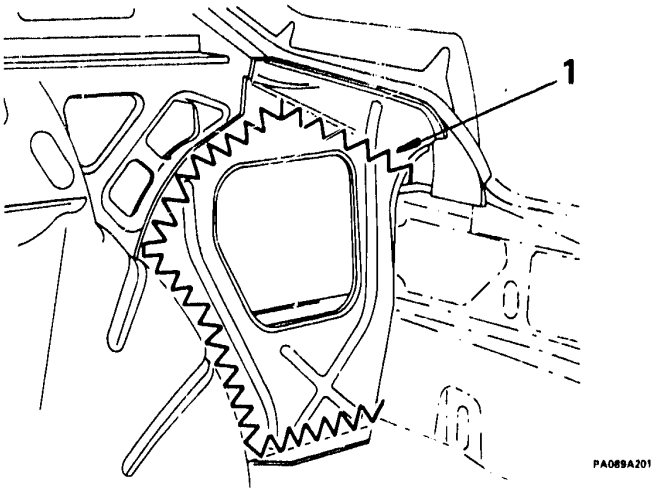

1. Cut with a pneumatic saw.

INTERIOR RIGHT SIDE PANEL WITH TAIL ASSEMBLY REMOVED (continued)
(4x4 version only)
Fitting

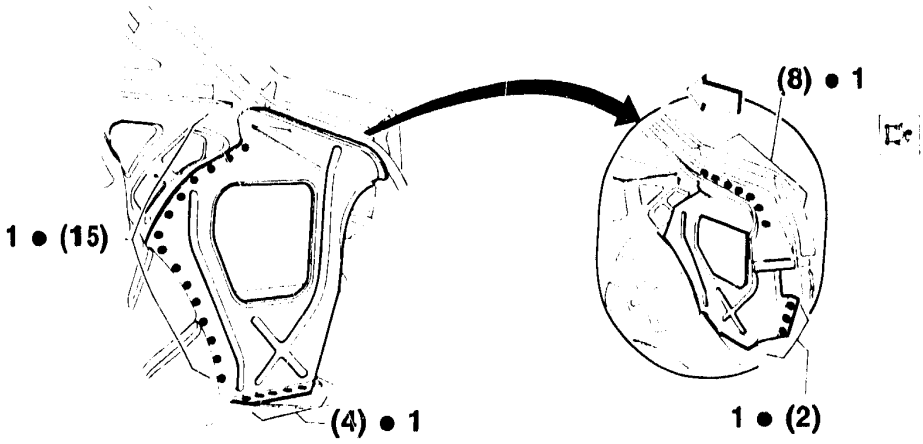

(⇦) Direction

1. Spot weld.

REAR PART OF REAR FLOOR WITH TAIL ASSEMBLY REMOVED
(4x2 version only)
Removal

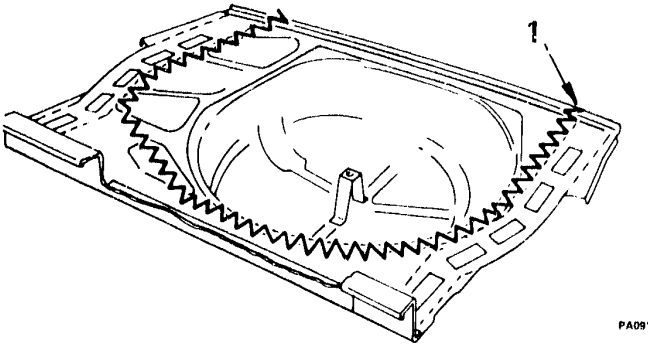

1. During the cutting operation take care not to damage the underlying framework.
   - Remove the weld points from the joints with a drill.

REAR PART OF REAR FLOOR WITH TAIL ASSEMBLY REMOVED (4x2 version only) (continued)

Fitting

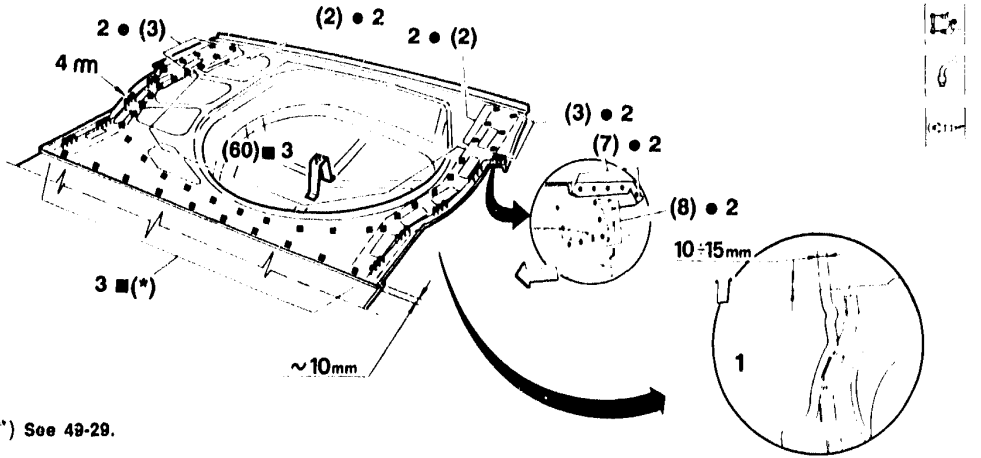

(*) See 49-29.

(⇦) Direction

NOTE: This replacement should be made without having to work on the wheel house in any way.

1. Cut the new floor in the wheel house zone as shown in the illustration.
2. Spot weld.
3. Fill weld.
4. Arc weld.

REAR PART OF REAR FLOOR WITH TAIL ASSEMBLY REMOVED (4x2 version only)
Fitting (continued)

- Provisionally attach the rear floor and draw a line along the rail and the crossmember underneath the floor.
  This will help with the drilling of the holes for the MIG welding.
- To achieve an effective weld, use a spot welder whenever possible.
  The remaining welding should be done with the MIG method.
- When installing the rear floor, provisionally attach the fender and the tail panel. Check the installation measurements with the illustrations in "Body Alignment"
  When the parts are provisionally attached, make a number of provisional MIG welds at various points on the rear floor.
- Apply sealant to the connecting surfaces of the rear wheel house and floor

1. Treat the welds beneath the floor with an anti-corrosive product.

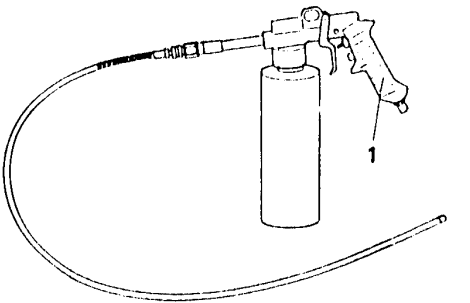

PA093A101

REAR PART OF REAR FLOOR WITH TAIL ASSEMBLY REMOVED (4x4 version only)

Removal

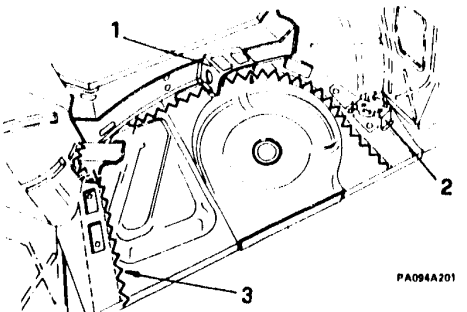

PA094A201

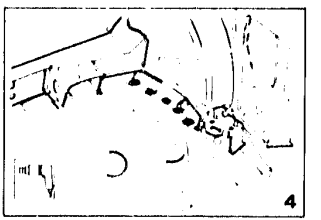

PA094A202

1. Take off the spare wheel bracket.
2. Take off the jack bracket.
3. Cut round with a pneumatic saw, leaving a border of about 3 ÷ 4 cm of floor along the length of the connecting crossmember.
4. With a drill, remove the weld points from the joints and from the overlying plates.

REAR PART OF REAR FLOOR WITH TAIL ASSEMBLY REMOVED (4x4 version only) (continued)

Fitting

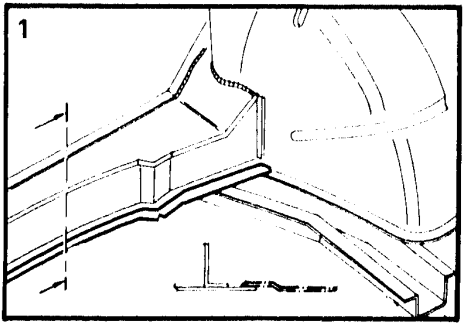

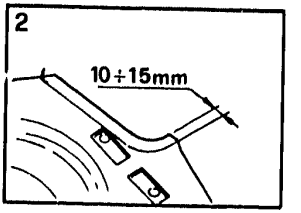

PA098A201

NOTE: This replacement should be made without having to work on the wheel house in any way.

1. Cut the new floor in line with the connecting cross-member, cutting out a slight tongue to couple in with the frame of the old floor.
2. Cut the new floor in the wheelhouse zone as shown in the illustration.

REAR PART OF REAR FLOOR WITH TAIL ASSEMBLY REMOVED
(4x4 version only)
Fitting (continued)

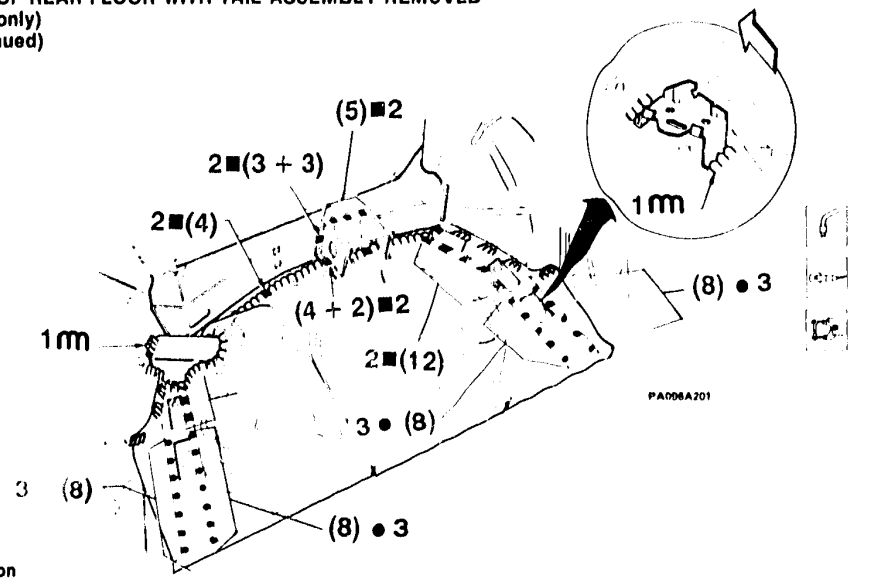

(⇦) Direction

1. Arc weld.
2. Fill weld.
3. Spot weld.

- Treat the welds underneath the floor with an anti-corrosive product.

33 MODELS

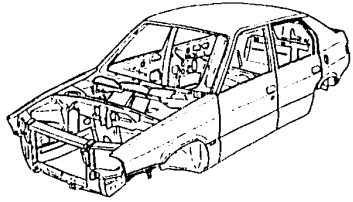

REPLACEMENTS (continued)

REPLACEMENTS

LEFT REAR SEMI-FLOOR WITH TAIL ASSEMBLY REMOVED
(4x4 version only) ..... 49 - 94
Removal ..... 49 - 94
Fitting ..... 49 - 95
RIGHT REAR SEMI-FLOOR WITH TAIL ASSEMBLY REMOVED
(4x4 version only) ..... 49 - 96
Removal ..... 49 - 96
Fitting ..... 49 - 97
REAR SIDERAIL ..... 49 - 98
Removal ..... 49 - 98
Fitting ..... 49 - 99
ROOF PANEL ..... 49 - 100
Removal ..... 49 - 100
Fitting ..... 49 - 101

LEFT REAR SEMI-FLOOR WITH TAIL ASSEMBLY REMOVED
(4x4 version only)
Removal

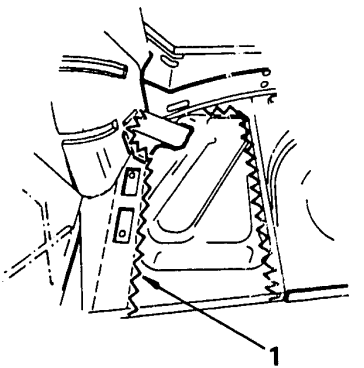

PA097A201

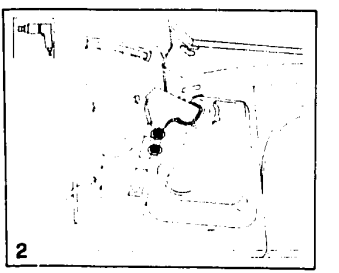

PA097A202

1. Cut, leaving a border of about 3 ÷ 4 cm of floor along the length of the connecting crossmember.

2. With a drill, remove the weld points in the joints and the overlying plates.

LEFT REAR SEMI-FLOOR WITH TAIL ASSEMBLY REMOVED (4x4 version only) (continued)

Fitting

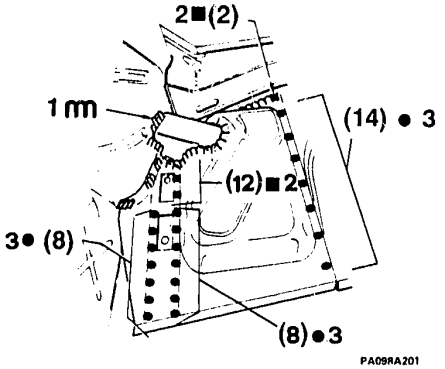

PA09RA201

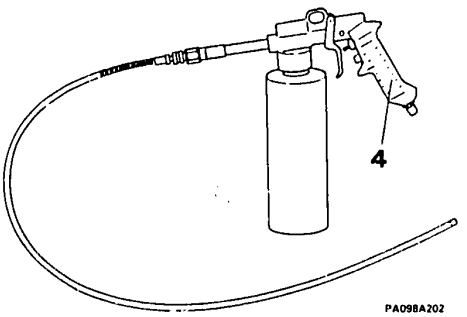

PA09BA202

- Cut the new semi-floor.

1. Arc weld.
2. Fill weld.
3. Spot weld.
4. Treat the welds underneath the floor with an anti-corrosive product.

RIGHT REAR SEMI-FLOOR WITH TAIL ASSEMBLY REMOVED
(4x4 version only)
Removal

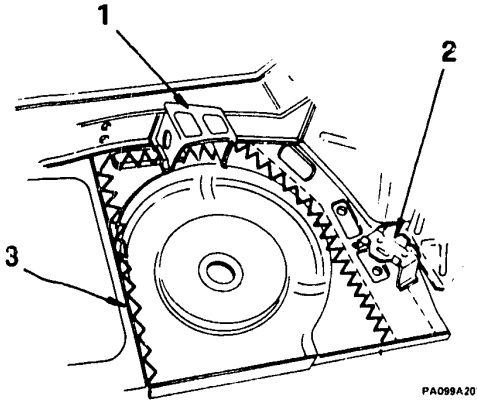

PA099A201

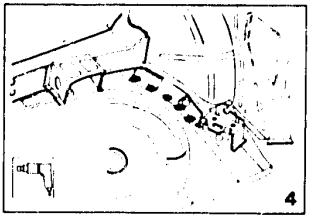

PA094A202

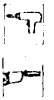

1. Take off the spare wheel bracket.
2. Take off the jack bracket.
3. Cut, leaving a border of about 3 ÷ 4 cm of floor along the length of the connecting crossmember.
4. With a drill, remove the weld points from the joints on the three overlying plates.

RIGHT REAR SEMI-FLOOR WITH TAIL ASSEMBLY REMOVED
(4x4 version only) (continued)
Fitting

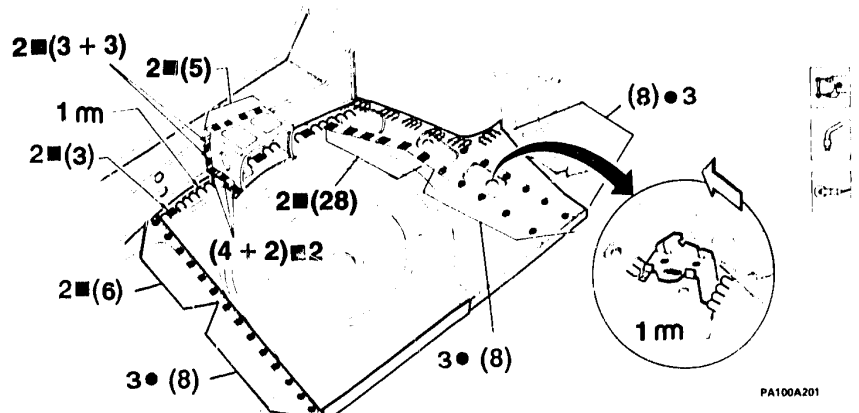

(⇦) Direction

- Cut the new flooring half, see "Rear part of floor panel".

1. Arc weld.
2. Fill weld.
3. Spot weld.

- Treat the welds underneath the floor with an anti-corrosive product.

REAR SIDERAIL

Removal

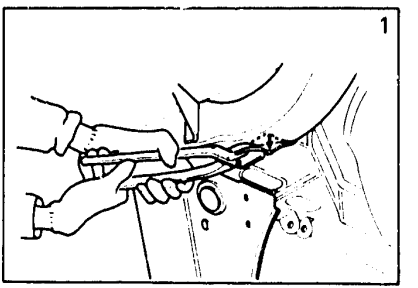

PA101A201

- With a drill, remove the weld points from the junctions on two and three overlying plates.

1. After removing the weld points, bend the tongue of the lower floor intermediate crossmember, and then remove the rail.

REAR SIDERAIL (continued)
Fitting

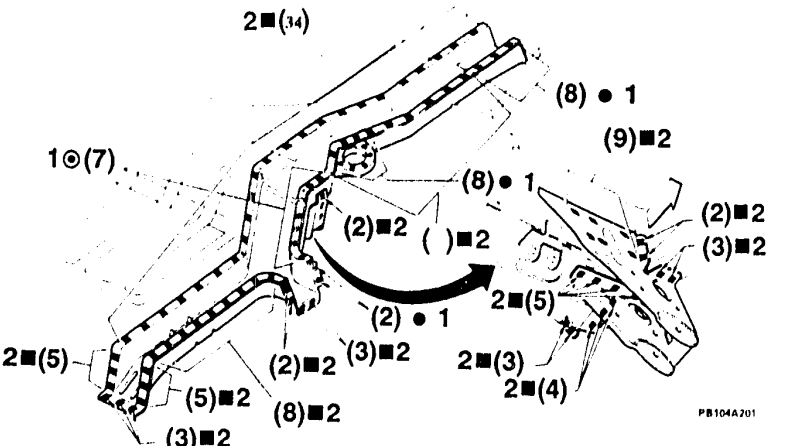

(⇦) **Direction**

- Provisionally attach the rail to the rear floor.
- Using a template, position correctly according to the standard measurement in "Body Alignment"

1. Spot weld.
2. Fill weld.

ROOF PANEL
Removal

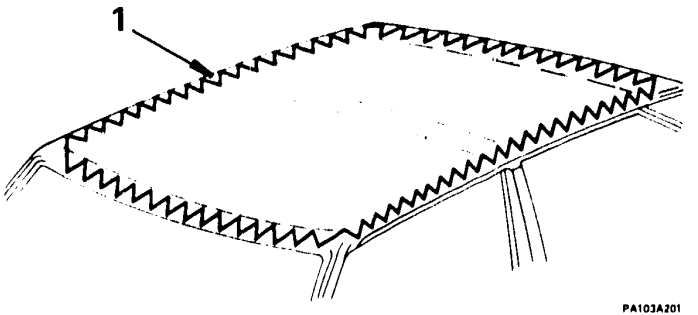

1. Cut with pneumatic chisel.

ROOF PANEL (continued)
Fitting

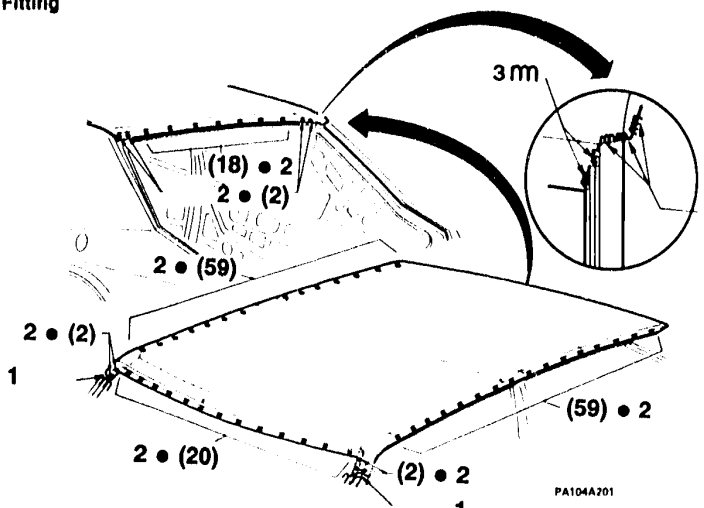

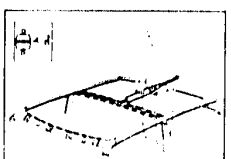

- Before welding, apply adhesive to the joints between the roof panel and the front, central and rear hoops.

1. Braze the indicated zones.
2. Spot weld.
3. Arc weld.

TCS TECHNICAL CHARACTERISTICS AND SPECIFICATIONS

TECHNICAL CHARACTERISTICS AND SPECIFICATIONS

SEALANTS 49-102
PRODUCTS FOR UNDERBODY PROTECTION 49-104
PRODUCTS FOR SOUNDPROOFING 49-106
PROTECTIVE PRODUCTS 49-107
FILLERS 49-109
SUPPLIERS OF SEALANTS-PROTECTION 49-110

TECHNICAL CHARACTERISTICS AND SPECIFICATIONS
SEALANTS

NAME	SUPPLIER	CODE	METHOD OF USE
SEALANT	AREXONS	1070-1091	To be applied by extrusion to joints in sheet metal (hiden)
640/770 NEX VS 780	BOSTON	–	
336/339	GELSON	C30560 - C30580	
TEROSTAT 1K PUR	TEROSON	14950 A	
SEALANT	3M	8645	
SEALANT	AREXONS	1070 1055A + 1050GB	To be applied by extrusion to joints in sheet metal (in view)
NEX VS B 700	BOSTON	–	
GELFLEX SEALANT 339	GELSON	C30501 - C30580	
TEROSTAT 92	TEROSON	11 888 S	
SEALANT	3M	8522/8525	



SEALANTS (continued)

NAME	SUPPLIER	CODE	METHOD OF USE
SO PL	BOSTON		Preformed sealants to be used for cracks wider than 2mm (section ❑ and ○)
EGOBON	GELSON	C30475 - C30476	
TEROSTAT VII	TEROSON	18091 P	
PREFORMED SEALANT	3M	EC 5312	
TEROSTAT II	TEROSON	181232	Preformed sealants to be used for cracks wider than 2 mm (section ▭)
PREFORMED SEALANT	3M	8573/8574	
ADHESIVE	AREXONS	1055A - B	Structural sealant for doors and boot/bonnet lids
NEX VS - B 880 - 770	BOSTON	-	
GELFLEX 336 - 339	GELSON	C30560 - C30580	
SEALANT	3M	8685	

PRODUCTS FOR UNDERBODY PROTECTION

NAME	SUPPLIER	CODE	METHOD OF USE
OTO REDY	AREXONS	1037	Protective PVC (spray application) with gravel and sound-proofing characteristics (areas not in view)
SUDOCAR A 1000 A 3000	BOSTON	–	
SIDE SCUDEX UNDER BODY	GELSON	20721 + 20756 20101 + 20126	
TEROSTAT 9320	TEROSON	17103 Q	
PROTECTIVE SEALANT	3M	8660 + 8666	
OTO BODY	AREXONS	1031	Protective PVC (spray application) with gravel-proofing characteristcs (areas in view)
SCUDOCAR CR700	BOSTON	–	
SIDE SCUDEX	GELSON	20721 + 20756	
TEROTEX SUPER 3000	TEROSON	17567 V - 17569 X	
BODY SCHUTZ/BODY PLAST	3M	8864 + 8874	



PRODUCTS FOR UNDERBODY PROTECTION (continued)

NAME	SUPPLIER	CODE	METHOD OF USE
OTO BODY NERO	AREXONS	1035	Bituminous vax for underbody protection
BODY SHELL BLACK GEL PROTEX NERO 87	GELSON	C20300 - C20310 C20303 - C20352	
TEROTEX WAX	TEROSON	17167 K	
BODY SEAL	3M	8860	

PRODUCTS FOR SOUNDPROOFING

NAME	SUPPLIER	CODE	METHOD OF USE
VIBRAGEL (NORMAL AND RHOMBOIDAL)	GELSON	C20630 - C20635	Soundproof material for vehicle interior (thermic application)
TERODEM SP100	TEROSON	11808 K - 13429 X	
8821	BOSTON	-	Soundproof material for vehicle interior (glued)
VIBRAGEL (NORMAL AND RHOMBOIDAL)	GELSON	C20630 - C20635	
TERODEM SP200	TEROSON	12539 E	
VIBRAFELT	GELSON	C20640	Preformed soundproofing material in rolls
SCHIUMA FIX	BOSTON	-	Soundproofing product for foam treatment of boxed parts
GELFOAM	GELSON	C30750	

PROTECTIVE PRODUCTS

NAME	SUPPLIER	CODE	METHOD OF USE
OTO BODY - BOXED PARTS	AREXONS	1038	Protective products for waxing insides of boxed parts
SCUDO CAR 700 CR	BOSTON	-	
GEL-PROTEX (TRANSPARENT STRAW COLOURED - BROWN - NERO 87)	GELSON	20351 + 20364	
TEROTEX HV200 - HV400	TEROSON	-	
SCUDO CAR A300 A100	BOSTON	-	Protective products for external finishing
PROTECTIVE WAX (SPRAY APPLICATION)	GELSON	C20501	
GELFLEX	GELSON	C30501	Electroweldable protective products (paste)
TEROKAL 2K PUR	TEROSON	-	
-	3M	8625	

PROTECTIVE PRODUCTS (continued)

NAME	SUPPLIER	CODE	METHOD OF USE
-	AREXONS	1090	Electroweldable products to be applied by brush for electrogalvanized sheet metal
ZINC COAT	GELSON	C20821	
ZINC SPRAY	TEROSON	11719 N	
WELD THRDUGH SEELER	3M	8625	
FEROX	AREXONS	4145	Oxide converters for boxed parts
-	3M	888 1E	
IK AFTER PRIMER	HERBERTS	888 1E	Products for aluminium parts

FILLERS

NAME	SUPPLIER	CODE	METHOD OF USE
ZINC FILLER COM.	AREXONS	1026	Filler for metals

SUPPLIERS OF SEALANTS-PROTECTION

SUPPLIER	ADDRESS	
AREXONS	SIPAL AREXONS S.P.A. SEDE 20129 MILANO VIA C. POMA 41 TEL. (02) 7610826 FAX: (02) 70000373 TELEFAX: 335489 SIPAL I	I
	FIAT LUBRIFICANTI DEUTSCHLAND GMBH LILIENTHALSTRASSE 23 D - 7100 HEILBRONN - BIBERACH TEL. 07066/7091 - FAX: 07066/6889	D
	FIAT LUBRIFICANTI FRANCE 19.AV VLADIMIR KOMAROV B.P. 24 78192 TRAPPES CEDEX TEL. 01/30660616 - FAX: 01/30509177	F
	FIAT LUBRIFICANTS UK LTD 12 DOLPHIN NEWS HOLYWELL HILL STALBANS AL1 1EY TEL. 0727/811213 - FAX: 0727/866295	GB
	OLIO FIAT IBERICA S.A. C/CONDE BORREL 208 08029 BARCELLONA TEL. 03/4513883 - FAX: 03/4516464	E

SUPPLIERS OF SEALANTS-PROTECTION (continued)

SUPPLIER	ADDRESS
BOSTON	BOSTON S.P.A. 20021 BOLLATE MILANO TEL. (02) 35002549 - TELEX: 330064 - 322407 BOSDE TELEFAX: (02) 35002477

SUPPLIERS OF SEALANTS-PROTECTION (continued)

SUPPLIER	ADDRESS	
TEROSON	VIA ROMA N° 20 CANEVAGO B.za (*) MI TEL. 02 - 95339050 FAX: 02 - 9501379	I
	TEROSON FRANCE TEROSON S.A. TOUR OBJECTIF 2 RUE LOUIS ARMAND F - 92607 ASNIÈRES CÉDEX	F
	TEROSON PARTNER POURTUGAL ELAUTO - ELECTRO AUTOMOBILISTA, LDA RUA SOARES DOS REIS 11A - P 1000 LISBOA	P
	TEROSON PARTNER GREAT BRITAIN HELLA LTD - WILDMERE INDUSTRIAL ESTATE GB BANBURY OXON OX16 7JU	GB
	TEROSON PARTNER SPAIN HELLA S.A. AVDA DE LOS ARTESANOS 24 E - 28760 TRES CANTOS (MADRID)	E

(*) EXCLUSIVE DISTRIBUTOR FOR ITALY "FORUM COLORUM"
PALAZZO L1 STRADA 6
20089 MILANOFIORI (ROZZANO) - TEL. 02-8243532 FAX: 8251798 TELEX: 3332111

SUPPLIERS OF SEALANTS-PROTECTION (continued)

SUPPLIER	ADDRESS	
GELSON	GELSON PRODOTTI CHIMICI PER L'INDUSTRIA E LA CARROZZERIA Via Varese, 13 - 20020 LAINATE (MILANO) TEL. 02-9370640 TELEX: 352555 TELEFAX: 93570880	I
	AGENCE WILSON S.A. Avenue Karl Marx, 9 - 69120 VAULX EN VELIN (LIONE)	F
	AUXILIAR DE CARROCERIA S.A. Paseo Mikel Gardoki - 20013 SAN SEBASTIAN	E
	HANDELSONDERNEMING BRAAY SANTPOORT B.V. Bloemendaalsestraatweg, 91 - 02082 GC SANTPOORT	NL
	AUTOLACKVETRIEBS GESMBH & CO KG Ortsstrasse, 18 - 2331 VOSENDORF (WIEN)	A

SUPPLIERS OF SEALANTS-PROTECTION (continued)

SUPPLIER	ADDRESS	
3M	3M ITALIA S.P.A. VIA S. BOVIO 3 20090 SEGRATE (MI) LOC. S. FELICE TEL. 02-75452479 FAX: 02-75452150	I
	3M DEUTSCHLAND GMBH D 4040 NEVSS P.O. BOX 100422	D
	3M FRANCE BOULEVARD DE LOISE F 95006 CERGY PONTAISC CEDEX	F
	3M UNITED KINGDOM PLI 3M HOUSE P.O. BOX 1 BROCKNELL BERKSHIRE RG 1215V	GB
	3M MINNESOTA DE PORTUGAL LDA RUA	P
	3M ESPANA S.A. SOSEFA VALCARCEL 31 MADRID 28027	E
	3M CENTER BLDG - 6N-01 ST. PAUL MINESOTA 55144 - 1000	USS

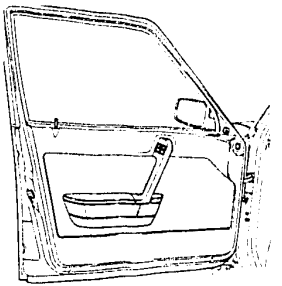

A1020B201

FRONT DOORS

FRONT DOORS

ASSEMBLY ..... 55 - 1
INTERIOR TRIM PANELS ..... 55 - 3
Removal - Fitting ..... 55 - 3
REAR VIEW WING MIRROR ..... 55 - 6
Removal - Fitting ..... 55 - 6
COMPLETE DOOR ..... 55 - 7
Removal - Fitting ..... 55 - 7
WINDOW REGULATORS AND WINDOWS ..... 55 - 8
Removal - Fitting ..... 55 - 8
LOCKS AND HANDLES ..... 55 - 9
Removal - Fitting ..... 55 - 9
MOLDINGS AND SEALS ..... 55 - 11
Removal - Fitting ..... 55 - 11

FRONT DOORS

ASSEMBLY

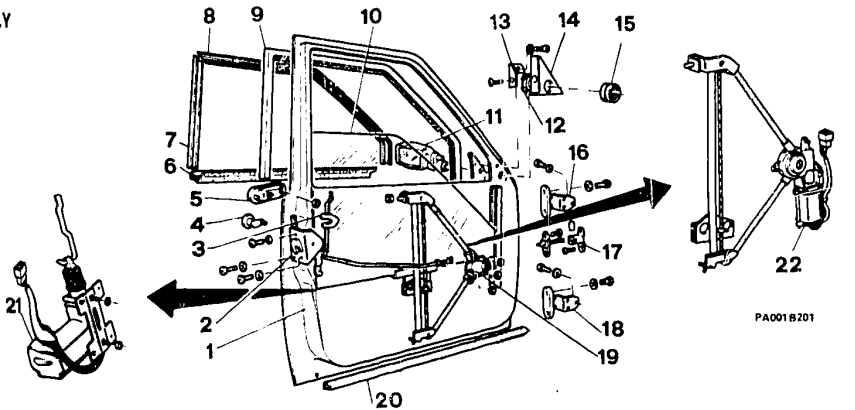

1 Door
2 Latch
3 Lock cylinder retaining clip
4 Lock cylinder
5 Handle
6 Exterior molding and water skimmer
7 Exterior molding
8 Exterior molding
9 Velvet weather strip with interior molding
10 Window
11 Rear view wing mirror
12 Ring nut
13 Mirror trim support
14 Mirror trim
15 Bellows
16 Hinge
17 Latch link
18 Hinge
19 Window regulator
20 Trim
21 Power door lock
22 Power window regulator

FRONT DOORS

ASSEMBLY (continued)

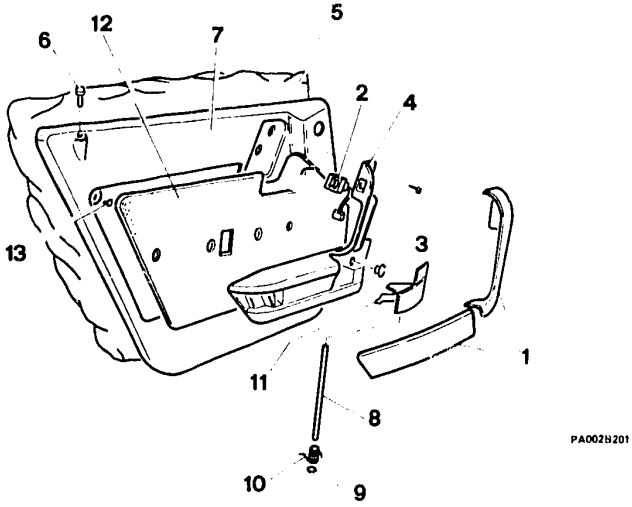

1 Finishing trim
2 Power window command
3 Plug
4 Armrest
5 Cellophane seal
6 Door locking knob
7 Panel
8 Pin
9 Spring washer
10 Spring
11 Door opening handle
12 Fabric panel
13 Spring clip

FRONT DOORS (continued)

INTERIOR TRIM PANELS

Removal - Fitting

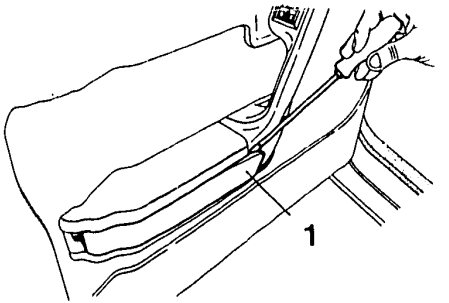

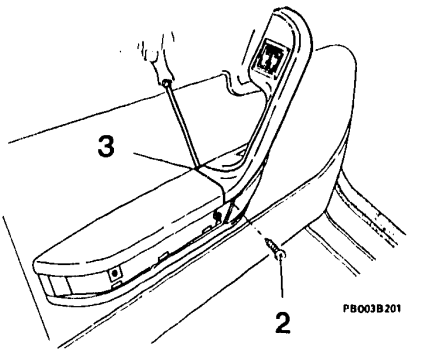

1. Remove trim panel from its armrest fitting, by pressing on the tabs holding it in place.
2. Remove lower screw from handgrip trim.
3. Prise away catch holding handgrip trim and remove trim.

INTERIOR TRIM PANELS
Removal - Fitting (continued)

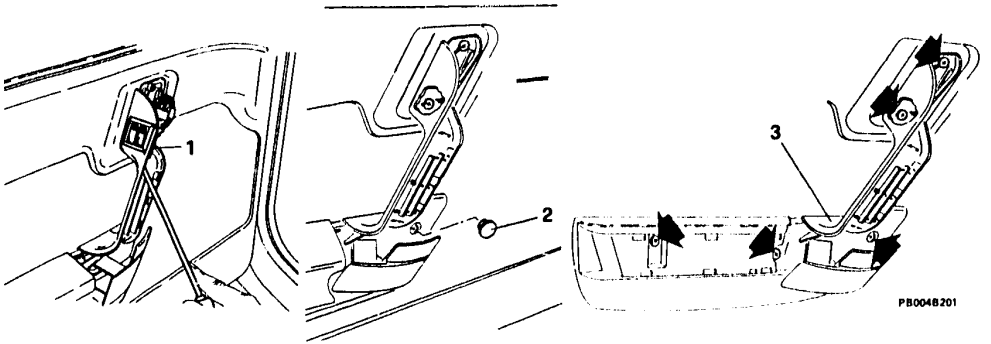

1. Exerting pressure on the lower catch of switch block, ease it out ot its housing after first disconnecting wiring.
2. Prise off platic cap.
3. Unscrew the 5 screws holding armrest to door frame and remove it.

INTERIOR TRIM PANELS
Removal - fitting (continued)

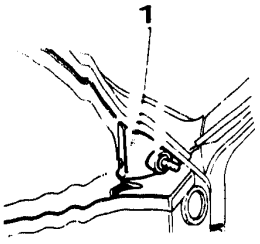

PA006B201

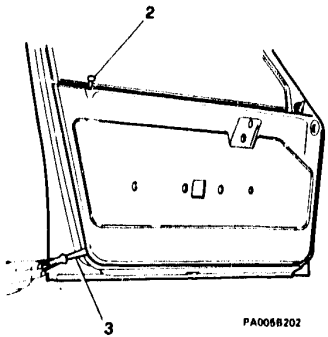

PA006B202

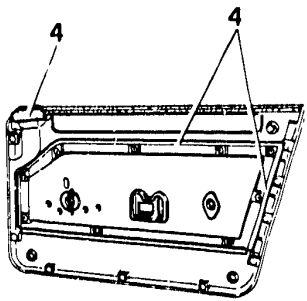

PA006B203

1. Unscrew the attaching screw from the trim and remove it together with the bellows.
- For models with manual window winder, remove the window winder handle after removing the trim over the screw that attaches the handle to the window regulator.
2. Unscrew and remove the door locking knob.
3. With a suitable tool, take out the plastic nails that fix the panel to the door, raise up and remove the panel, releasing it from its upper fitting.
- If necessary, disconnect the attachment points on the rear of the panel to remove the fabric panel.
4. If necessary, replace the adhesive seal.

FRONT DOORS (continued)

REAR VIEW WING MIRROR

Removal - Fitting

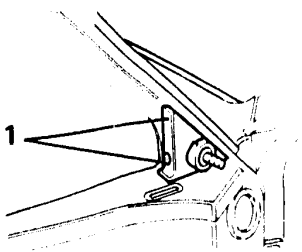

PA006B201

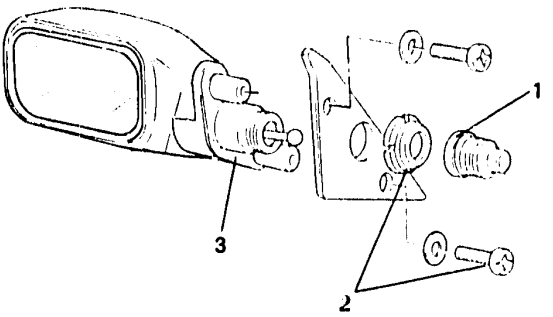

PA006B202

1. Unscrew the attaching screw from the trim and remove the trim and the bellows.
2. Unscrew the ring nut and the two screws.
3. Remove the mirror.

NOTE: The upper screw also secures the trim support.

FRONT DOORS (continued)

COMPLETE DOOR

Removal - Fitting

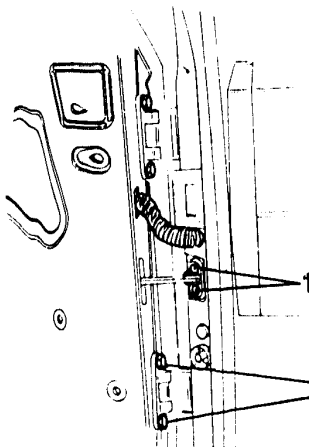

PB0078201

- Disconnect any wiring that may be present.
1. Unscrew two screws of tie rod.
2. Unscrew the four screws of door hinges and remove door.

2 — 13 to 21 Nm (1.36 to 2.2 Kgm)

FRONT DOORS (continued)

WINDOW REGULATORS AND WINDOWS

Removal - Fitting

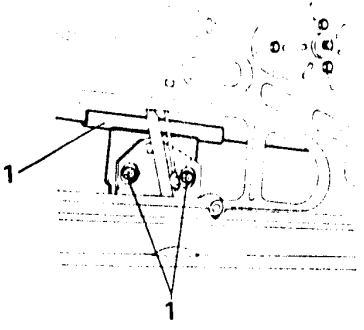

- Remove the complete panel and the cellophane seal. (see 55-3).

1. With the window fully down, unscrew the two nuts that attach the window regulator to the window and remove it from the door by turning it round.

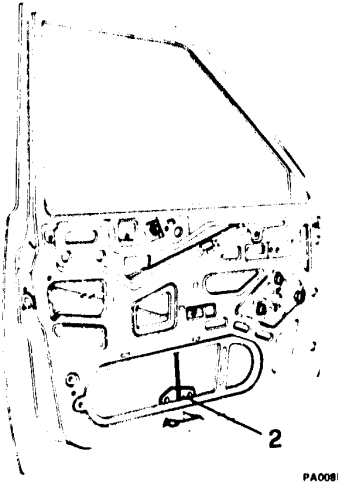

2. Remove the window regulator, unscrewing the five attaching nuts.

In models with power window regulators, disconnect the electrical wiring from the window regulator motor.

FRONT DOORS (continued)

LOCKS AND HANDLES

Removal - Fitting

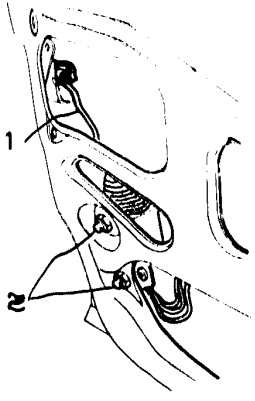

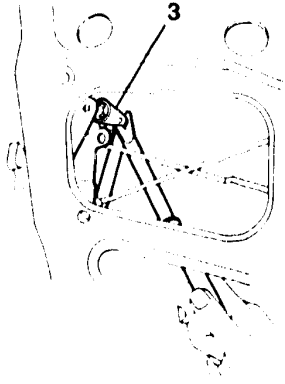

- Remove complete panel and cellophane seal (See 55-3).

1. In models with power door locking, unhook the latch that connects lock cylinder to locking mechanism.
2. Remove electric locking mechanism disconnecting the wiring and unscrewing the two nuts.
3. Unhook latch link that connects latch to lock cylinder.

LOCKS AND HANDLES
Removal and fitting (continued)

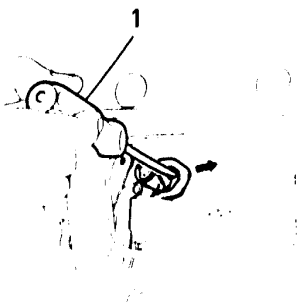

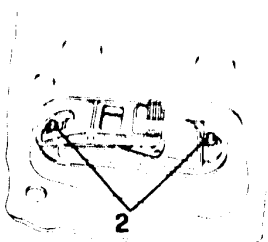

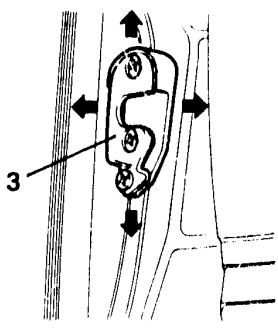

1. Remove the lock cylinder retaining clip with an appropriate tool and remove the lock cylinder.
- Unscrew three attaching screws that attach the latch to the door and remove the latch.
2. Unscrew the two attaching screws that attach the handle to the door and remove the handle.
3. Check that the door opening mechanism is working properly and, if necessary, loosen off the three attaching screws on the latch and adjust its position so that the door is able to close perfectly.

FRONT DOORS (continued)

MOULDINGS AND SEALS

Removal - Fitting

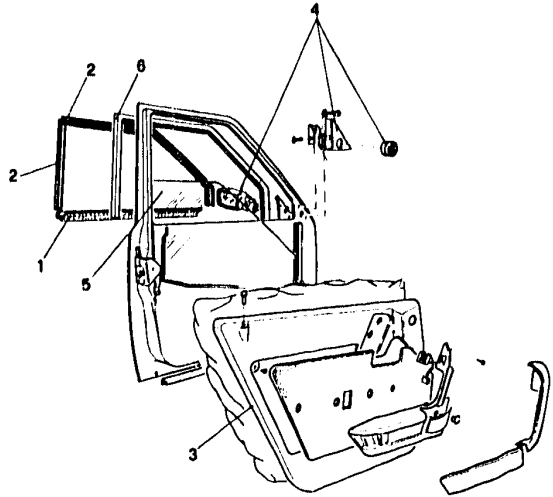

PB01182O1

1. Remove moulding with water skimmer.
2. Remove exterior moulding.
3. Remove complete finishing panel (See 55-3)
4. Remove rearview mirror.
5. Remove window guide and window.
6. Remove velvet weatherstrip with interior moulding.

MOULDINGS AND SEALS
Removal - Fitting (continued)

1. When refitting make sure that velvet window trim is fixed in position in window channel on interior of door.

Using suitable grease, lubricate the hinges and door locking device.

To avoid damage to bodywork, cover point of tool used for removing moulding.

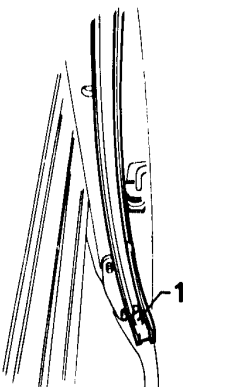

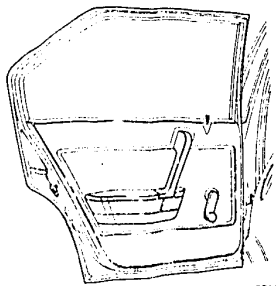
PA021B201

REAR DOORS

REAR DOORS

ASSEMBLY ..... 55 - 13
INTERIOR TRIM PANELS ..... 55 - 15
Removal - Fitting ..... 55 - 15
COMPLETE DOOR, WINDOW REGULATORS AND WINDOWS ..... 55 - 17
Removal - Fitting ..... 55 - 17
LOCKS AND HANDLES ..... 55 - 18
Removal - Fitting ..... 55 - 18
MOLDINGS AND SEALS ..... 55 - 20
Removal - Fitting ..... 55 - 20

REAR DOORS

ASSEMBLY

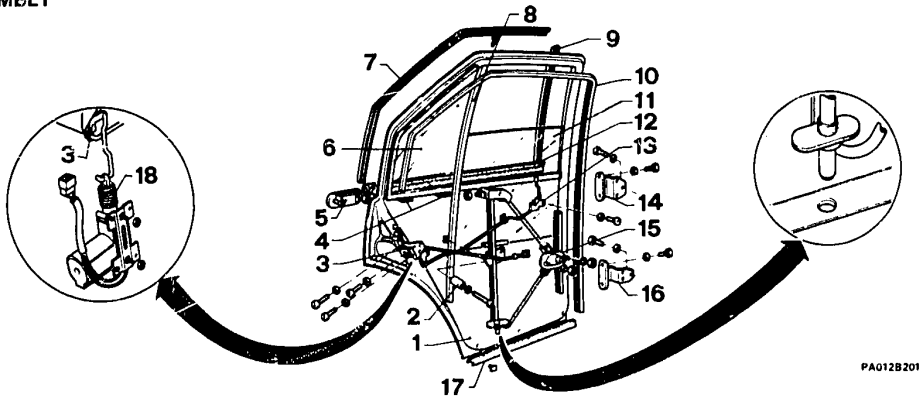

1 Door
2 Spacer
3 Latch
4 Rubber fittings
5 Handle
6 Fixed window
7 Exterior molding
8 Fixed window channel
9 Exterior molding
10 Velvet weather strip and interior molding
11 Window
12 Exterior molding and water skimmer
13 Door locking link
14 Hinge
15 Window regulator
16 Hinge
17 Seal
18 Power door lock

REAR DOORS
ASSEMBLY (continued)

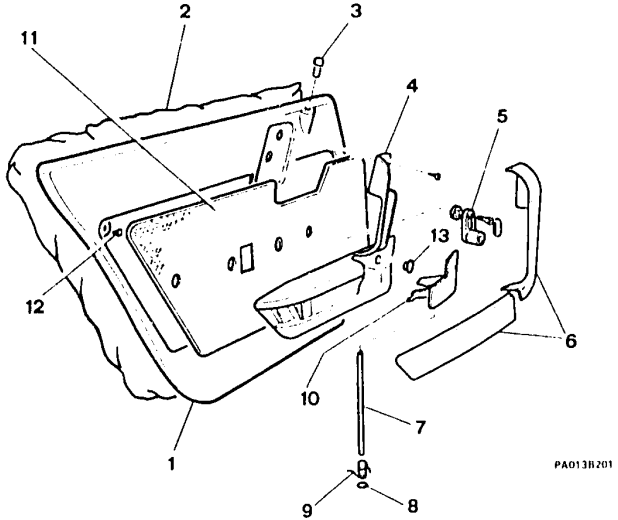

1 Panel
2 Cellophane seal
3 Door locking knob
4 Armrest
5 Window winding handle
6 Trim
7 Pin
8 Spring washer
9 Spring
10 Door opening handle
11 Fabric panel
12 Spring clips
13 Plug

REAR DOORS (continued)

INTERIOR TRIM PANELS

Removal - Fitting

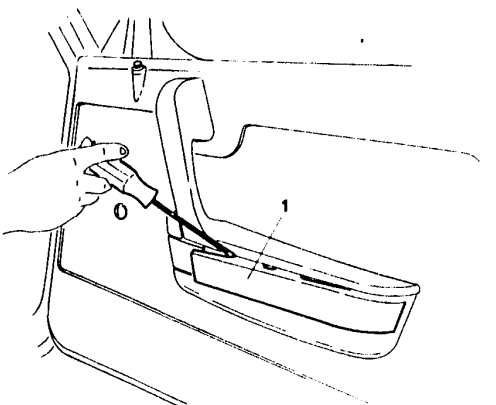

1. Remove trim facing from its fitting in the armrest.

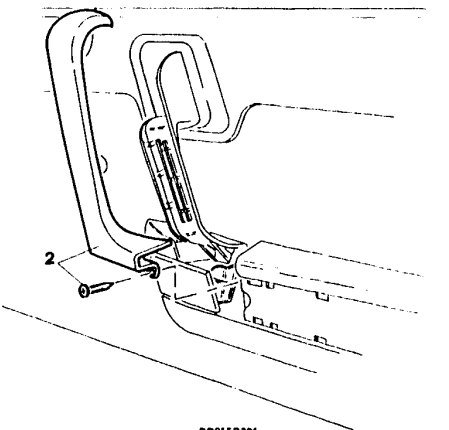

2. Remove handgrip trim facing, unscrewing the screw and releasing the catch.

⇩

INTERIOR TRIM PANELS
Removal - Fitting (continued)

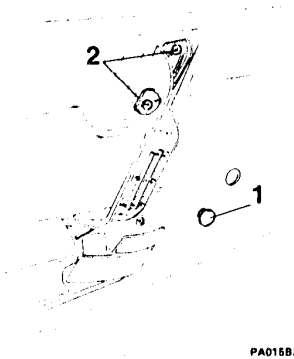

PA015B201

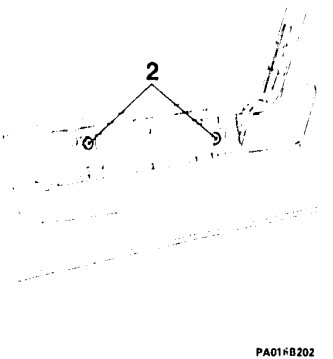

PA015B202

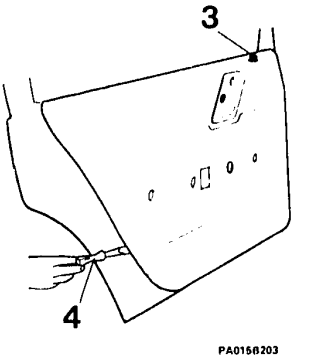

PA015B203

- Remove the window winding handle after taking off the trim that covers the attaching screw.
1. Remove the plug behind the door opening handle.
2. Unscrew the screws and remove the armrest.
3. Unscrew and remove the door locking knob.
4. Using a suitable tool, take out the plastic nails that attach the panel to the door; raise up and remove the panel, releasing it from its upper fixture.

The point of the tool used to take out the plastic nails should be covered, in order to avoid damage to the bodywork.

REAR DOORS (continued)

COMPLETE DOOR, WINDOW REGULATORS AND WINDOWS

Removal - fitting

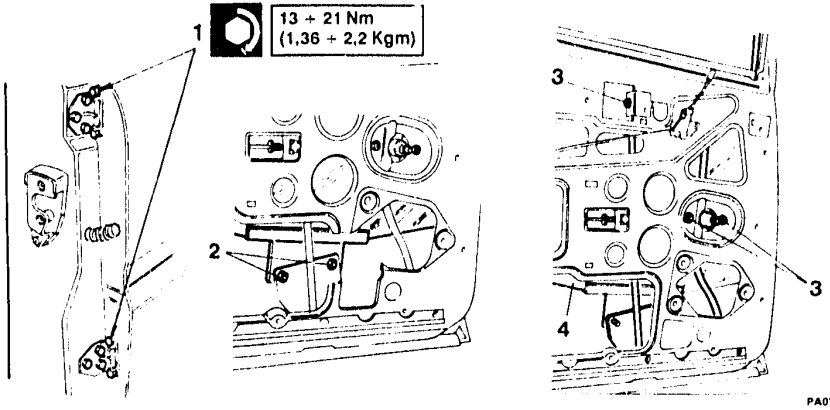

- Disconnect any electrical connections.

1. Unscrew the four attaching screws that attach the hinges to the door, and remove the door.

- Remove the complete panel and the cellophane seal. (see 55-15).

2. With the window fully down, unscrew the two attaching nuts that attach the window regulator to the window.

3. Unscrew the three attaching nuts that attach the window regulator to the door and remove the mechanism from below, raising up the window to help the removal.

- Remove the fixed window channel and window.

4. Remove the window.

REAR DOORS (continued)

LOCKS AND HANDLES

Removal and Fitting

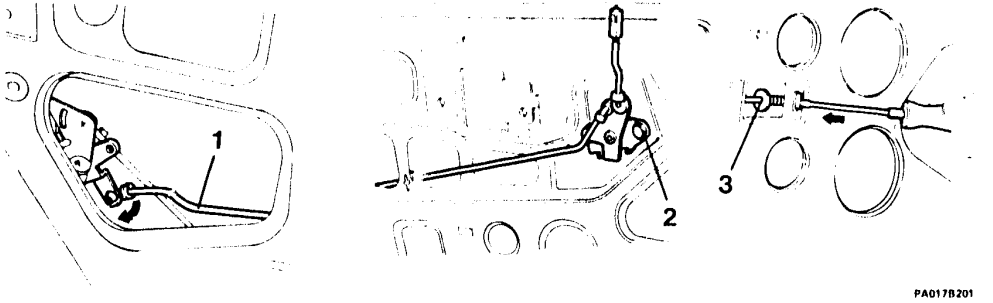

- Remove the panel and take out the cellophane seal.
- Raise the window fully to avoid damaging it.

1. Unhook the door locking link from the latch.
2. Unscrew the door locking link attaching screw and remove the link from the door.
3. Unhook the door opening link rod from the door.

LOCKS AND HANDLES
Removal and Fitting (continued)

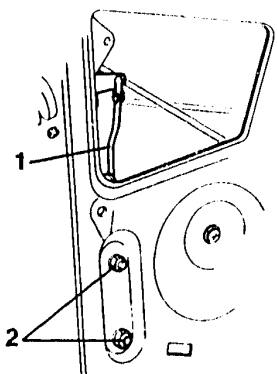

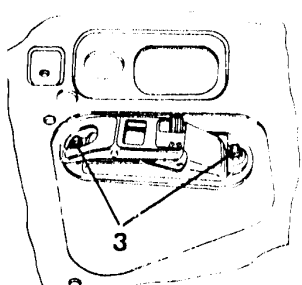

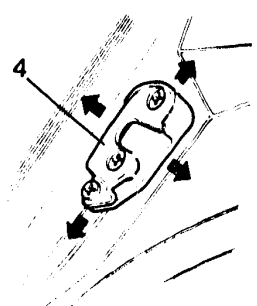

1. In models with central locking, unhook the latch link that connects the latch to the power door lock.
2. Remove the power door lock, disconnecting the wiring and unscrewing the two attaching nuts.
- Unscrew the three screws that attach the latch to the door and remove the latch.
3. Unscrew the two nuts that attach the handle to the door and remove the handle.
4. Check that the door opening mechanism is working properly and, if necessary, loosen off the three attaching screws on the latch and adjust its position so that the door is able to close perfectly.

REAR DOORS (continued)

MOLDINGS AND SEALS

Removal - fitting

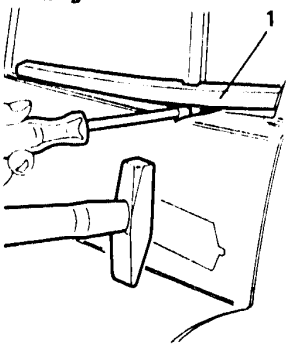

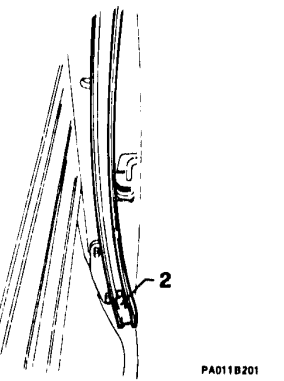

1. Remove the molding with water-skimmer.
- Remove the exterior molding.
- Remove the complete panel.
- Remove the fixed window channel, the fixed window and the window.
- Remove the velvet weatherstrip with interior molding.

2. When refitting, ensure that the velvet weatherstrip is fixed in position in the window channel on the interior of the door.

Using the correct type of grease, grease the hinges and the door lock.

The point of the tool used to remove the molding should be covered in order to avoid damage to the bodywork.

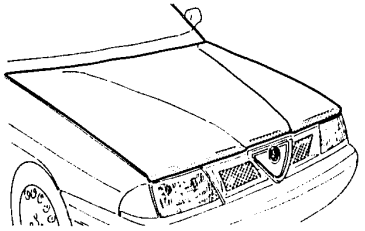

FRONT HOOD

FRONT HOOD

ASSEMBLY....56 - 1
REMOVAL....56 - 2
POSITION ADJUSTMENT....56 - 3
ADJUSTMENT OF HOOD BUMPERS AND LATCH....56 - 4
REPLACEMENT OF LATCH....56 - 5
REPLACEMENT OF RELEASE CABLE....56 - 6
REPLACEMENT OF SUPPORT ROD AND WEATHERSTRIPS....56 - 7

FRONT HOOD
ASSEMBLY

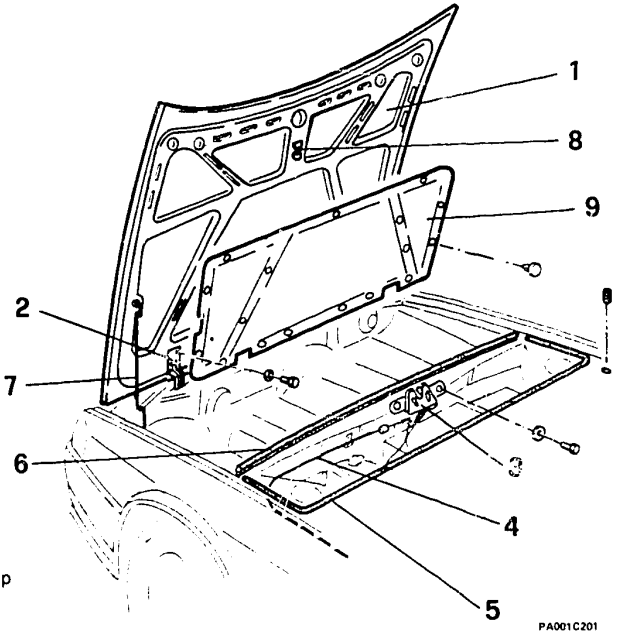

1 Hood
2 Hinge
3 Hood latch
4 Hood release cable
5 Engine compartment bulkhead weatherstrip
6 Service basin weatherstrip
7 Hood support rod
8 Striker
9 Soundproofing panel

FRONT HOOD (continued)

REMOVAL

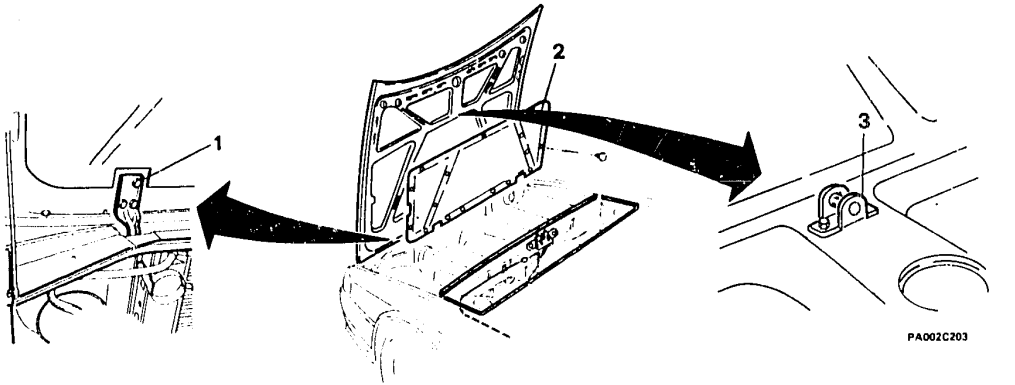

- When removing or fitting the hood, the sides of the hood should be protected with a cloth, or other protective material, to avoid damage to the bodywork.

2. Unscrew the screws that attach the hinges to the hood and remove the hood.

- To refit the hood, carry out the removal operation in reverse order, making the necessary adjustments.

Before fitting the hood, apply a protective product to the uncovered zones.

2. Take out the plastic nails and remove the panel.
3. Remove the striker by unscrewing the attaching screws.

- When refitting the striker, position it with the arrows pointing towards the hood hinges.

FRONT HOOD (continued)

POSITION ADJUSTMENT

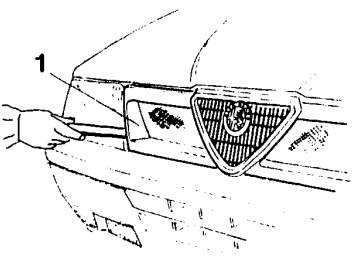

PA003C201

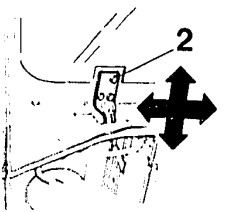

PA003C202

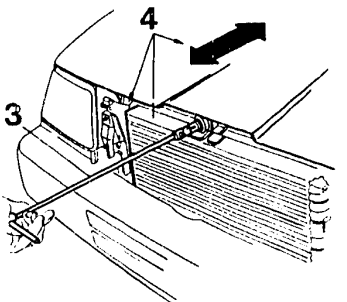

PA003C203

- Lift the hood and unscrew the grille attaching screws.
1. Close the hood and remove the grille.
2. Open the hood again, loosen off the hinge screws and make the adjustment.
3. Unscrew the screws that attach the radiator to the frontcrossmember.
4. Shift the radiator forward and adjust the shims on the hood hinges to obtain the correct positioning of the hood.

FRONT HOOD (continued)

ADJUSTMENT OF HOOD BUMPERS AND LATCH

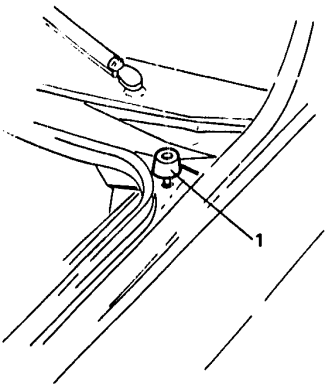

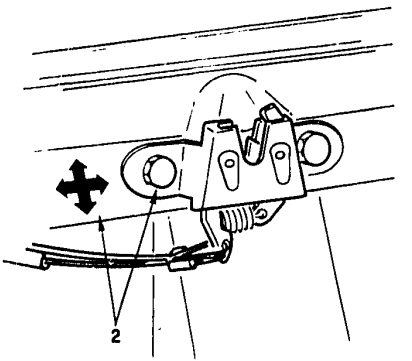

1. Loosen off hood bumpers; apply loctite to the threaded part and carry out adjustment.
2. Loosen off screws fastening latch and carry out adjustment.

FRONT HOOD (continued)
REPLACEMENT OF LATCH

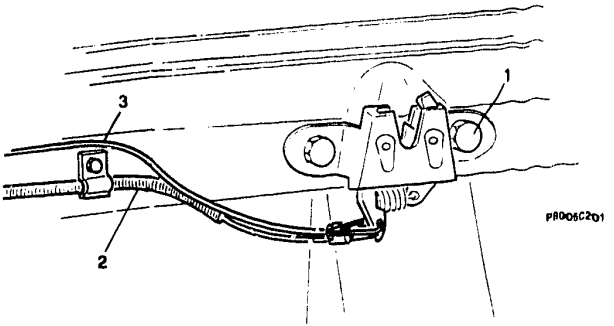

1. Unscrew screws fastening latch.
2. Disconnect hood release cable, taking off the ring.
3. Disonnect hood release cable.

- Refit a new latch, reversing removal procedure.

FRONT HOOD (continued)
REPLACEMENT OF RELEASE CABLE

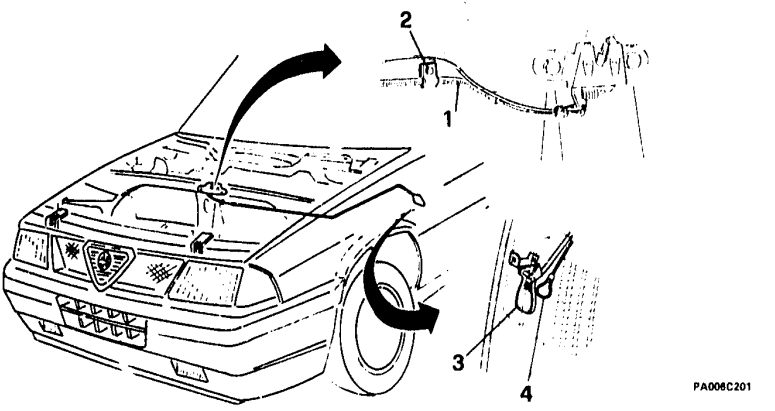

1. Cut the cable off near to the hood latch.
2. Loosen off the sheath retaining clip.
3. Working from inside the vehicle, unthread the cable and the sheath from the hood release lever.
   - Insert the new cable, complete with sheath, and attach it to the hood release lever.
4. If the hood release cable breaks, the hood can be opened by pulling the emergency nylon cord in the passenger compartment.

FRONT HOOD (continued)

REPLACEMENT OF SUPPORT ROD AND WEATHERSTRIPS.

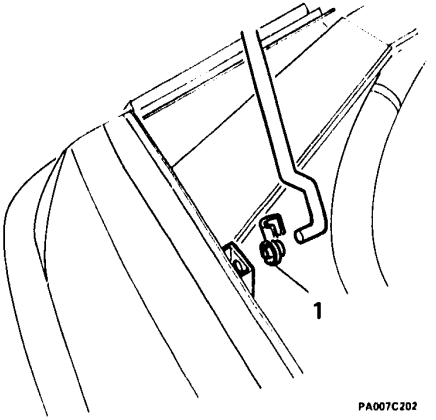

PA007C202

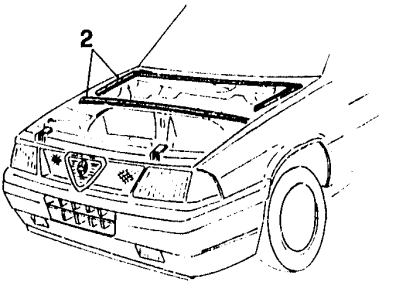

PA007C202

1. Disconnect the rod from the bracket and proceed with the removal.

2. Pull the weather strip upwards, away from the metal retaining channel.

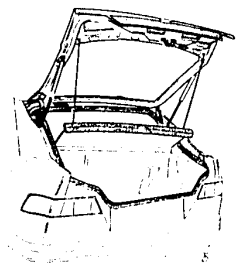

33 MODELS

LIFTGATE

SPOILER

LIFTGATE

ASSEMBLY....56 - 8
REMOVAL - FITTING....56 - 9
DISASSEMBLY....56 - 10
Closing mechanism and number plate lights....56 - 10
Reflector and emblem....56 - 11
Mobile shelf cord attachments, support cylinder supports and rubber bumpers....56 - 12
Rear windscreen wiper....56 - 13
ADJUSTMENT....56 - 14
REPLACEMENT AND ADJUSTMENT OF DOOR RELEASE CABLE....56 - 15

SPOILER

REMOVAL - FITTING....56 - 16

LIFTGATE
ASSEMBLY

1 Lifgate
2 Cord attachment
3 Liftgate wiring
4 Hinge
5 Mobile shelf
6 Emblem
7 Reflector
8 Number plate lights
9 Latch
10 Support cylinder
11 Weather strip
12 Antivibration fitting
13 Weather strip
14 Mobile shelf cord
15 Weather strip

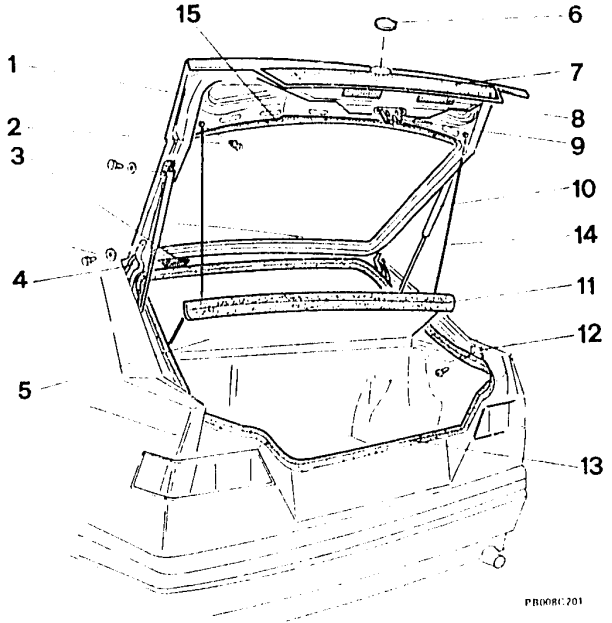

LIFTGATE (continued)

REMOVAL - FITTING

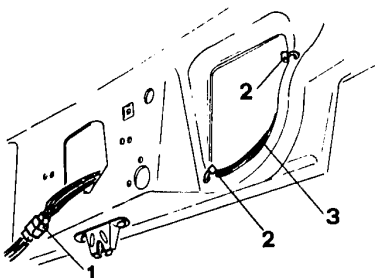

PA009C201

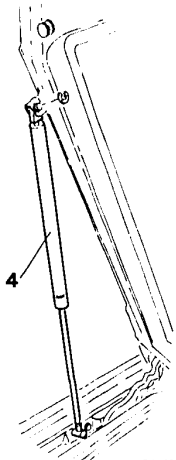

PA009C203

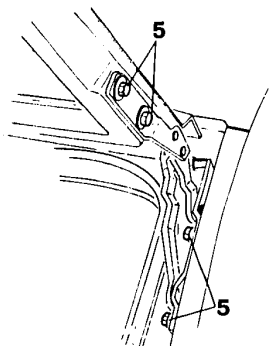

PA009C202

1. Disconnect the electrical connections.
2. Remove the clamps.
3. Take out the wiring.
4. Unhook the support cylinder.
5. Unscrew the hinge screws and remove the liftgate.

LIFTGATE (continued)

DISASSEMBLY

Closing mechanism and number plate lights

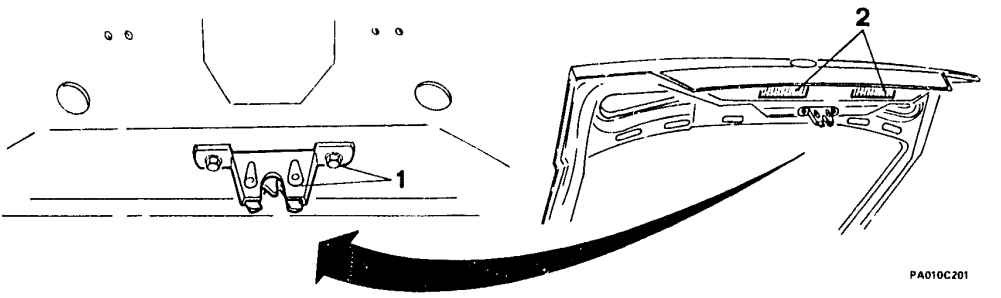

1. Unscrew the two screws and remove the latch.
2. Unhook the clip and take out the number plate lights.

DISASSEMBLY (continued)

Reflector and emblem

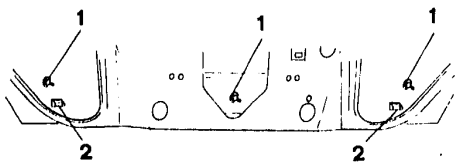

PA011C201

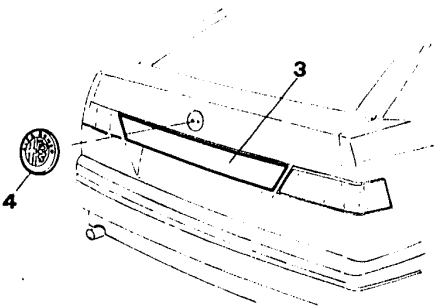

PA011C202

1. Unscrew the 3 screws
2. Unhook the 2 reflector attaching clips.
3. Remove the reflector.
4. Remove the emblem (pressure fitting).

- When reassembling, apply glue to the contact surfaces between the emblem and the door.

DISASSEMBLY (continued)

Mobile shelf cord attachments, support cylinder supports and rubber bumpers

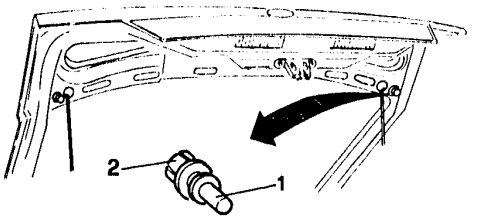

PA012C201

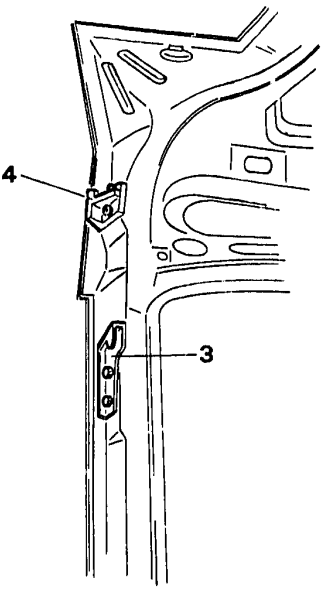

PA012C202

1. Take out the pins.
2. Take out the expanding attachments for the mobile shelf cords.
3. Remove the support cylinder supports.
4. Remove the rubber bumpers.

DISASSEMBLY (continued)

Rear windscreen wiper

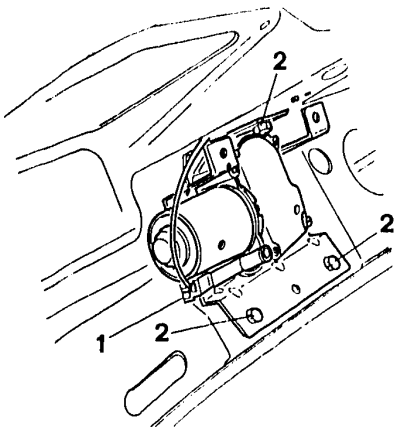

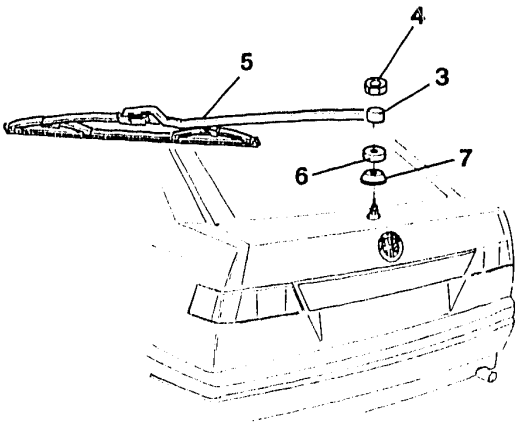

- Remove the protective cover by taking out the three plastic nails.
1. Disconnect the electrical connection.
2. Loosen the 3 screws securing the rear windscreen wiper motor.
3. Raise the arm cover.
4. Unscrew the nut.
5. Remove the rear windscreen wiper arm.
6. Remove the cover.
7. Remove the grommet.

LIFTGATE (continued)
ADJUSTMENT

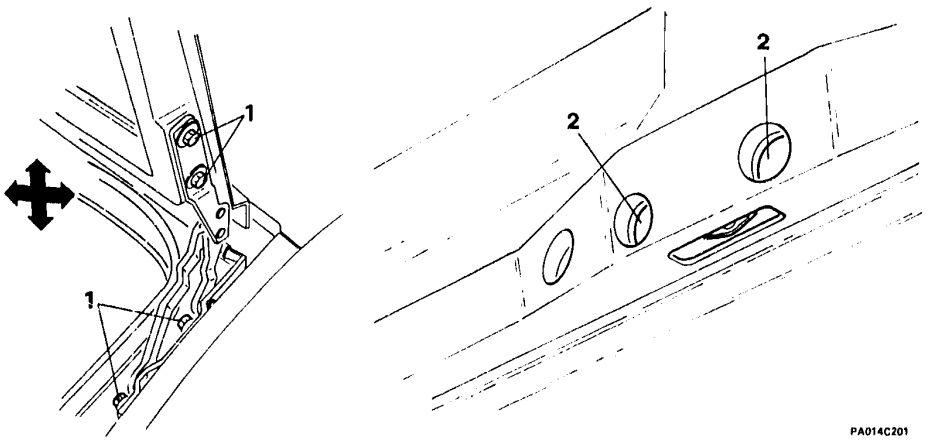

1. To adjust the liftgate in line with the roof in a longitudinal direction, adjust the hinge screws.
2. To adjust the height of the liftgate and rear windscreen, adjust the screws on the latch, gaining access via the holes.

LIFTGATE (continued)
REPLACEMENT AND ADJUSTMENT OF DOOR RELEASE CABLE

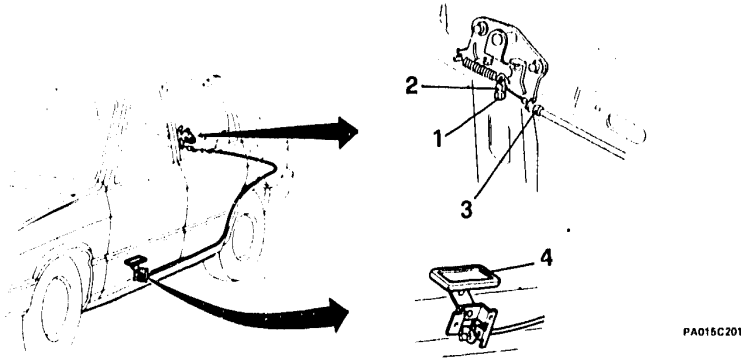

1. Loosen off the attaching nut.

- If necessary, adjust the cable tautness by by adjusting the attaching nut.

SPOILER
REMOVAL - FITTING

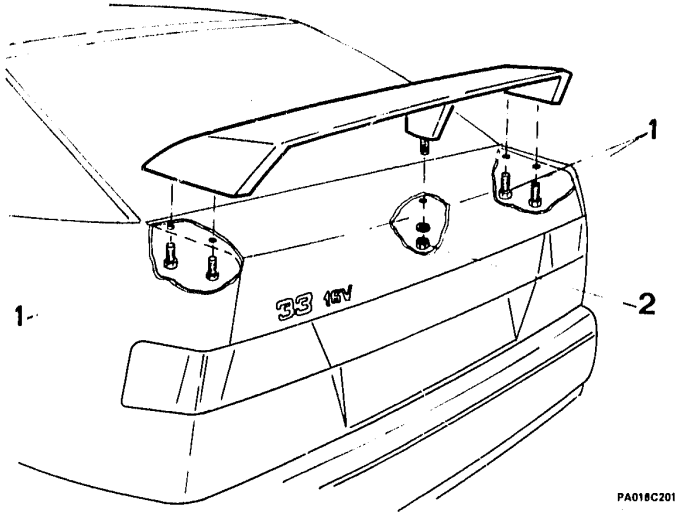

1. With the liftgate open, unscrew the four lateral screws.
2. Unscrew the central nut and remove the spoiler.

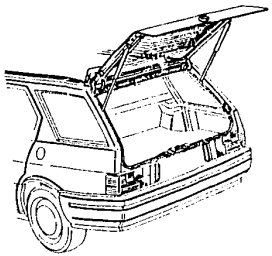

Sport Wagon MODELS

LIFTGATE

SPOILER

LIFTGATE

ASSEMBLY..... .....56 - 17

REMOVAL - FITTING .....56 - 18

SPOILER

REMOVAL - FITTING .....56 - 20

LIFTGATE
ASSEMBLY

1 Liftgate
2 Support cylinder
3 Hinge
4 Door lining
5 Weather strip
6 Antivibration fitting
7 Weather strip
8 Liftgate latch
9 Plug
10 Antivibration fitting
11 Spoiler
12 Emblem
13 Rear windscreen wiper motor
14 Liftgate striker
15 Liftgate wiring (only for vehicles without contacts on the liftgate)

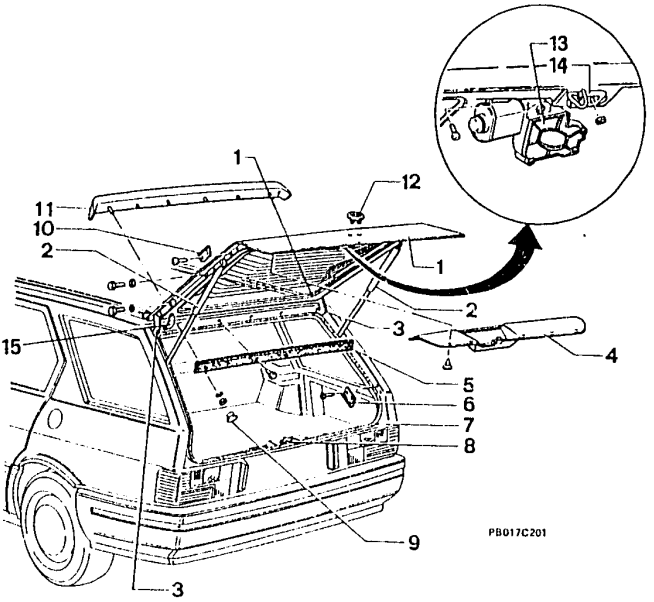

LIFTGATE (continued)

REMOVAL - FITTING

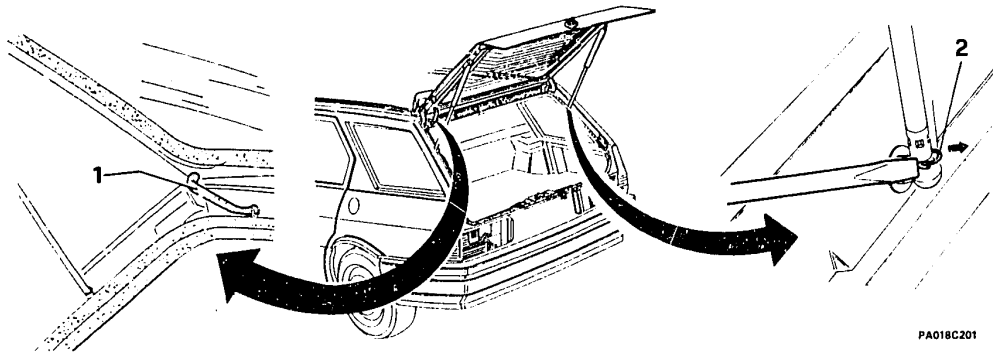

Cover the sides of the liftgate with a cloth, or equivalent, to avoid damage to the bodywork.

- Disconnect the rear windscreen heater and rear windscreen wiper motor wiring.

1. Unthread the cable-guide sheath.
2. With the point of a screwdriver, remove the two support cylinder rod holding rings and remove the rods from their fittings.

LIFTGATE

REMOVAL - FITTING (continued)

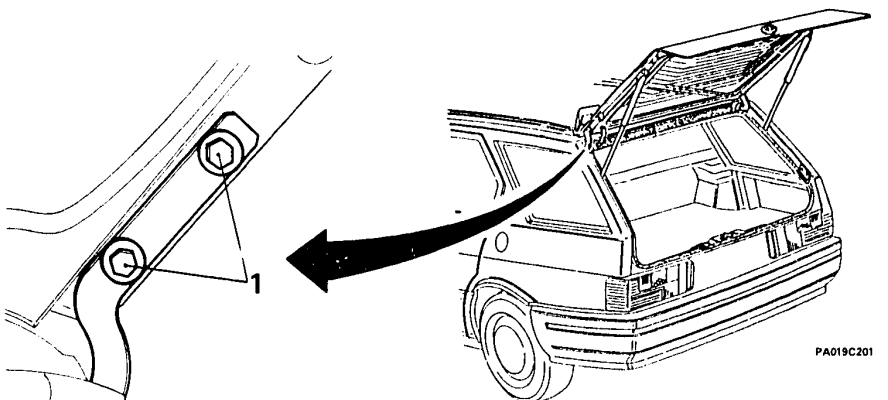

1. Unscrew the four screws that attach the hinges to the liftgate and remove the liftgate.

- On refitting, proceed with the adjustments to the liftgate (see 56 - 14).

SPOILER
REMOVAL - FITTING

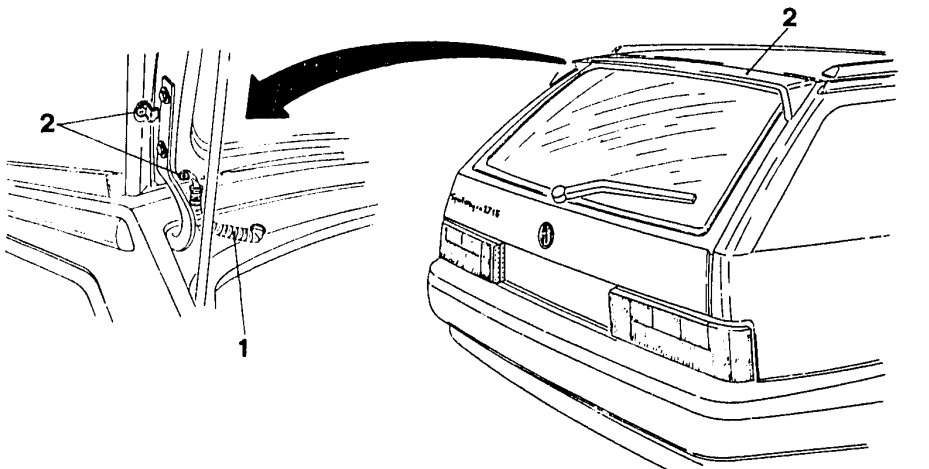

1. Working from underneath the liftgate, gain access to the attaching screws and remove the cable-guide sheath.
2. Unscrew the four attaching screws and remove the spoiler, unhooking it from the four plastic nails.

MICROFICHE INDEX

Microfiche 13/15 Groups: 66-75-80

Group 66 - Internal trimming

INTERNAL UPHOLSTERING ..... 66 - A
FRONT SEATS, REAR SEATS, REAR CONSOLE ..... 66 - B
CENTRAL CONSOLE - GEAR SHIFT LEVER ..... 66 - C
DASHBOARD, REAR SAFETY BELTS, TSN ..... 66 - D

Group 75 - External trim

BUMPER, RADIATOR GRILLE AIR INTAKE GRILLE ..... 75 - E
WINDSHIELD, REAR WINDOW ..... 75 - F
UNDER-DOOR SKIRT, SIDE BAND, FENDER PANEL, SUNROOF ..... 75 - G
SUNROOF (Continued), TSN ..... 75 - H

Group 80 - Air conditioning

AIR CONDITIONING (Premodification) ..... 80 - I
HEATER (Premodification) ..... 80 - L
CONDITIONER (Premodification) ..... 80 - M
CONDITIONER (Premodification) (Continued) ..... 80 - N
HEATING-VENTILATION (Postmodification) ..... 80 - O
HEATING-VENTILATION (Postmodification) (Continued) ..... 80 - P
HEATING-VENTILATION (Postmodification) (Continued) ..... 80 - Q
HEATING-VENTILATION (Postmodification) (Continued) ..... 80 - R
TSN, SPECIAL SERVICE TOOLS ..... 80 - S

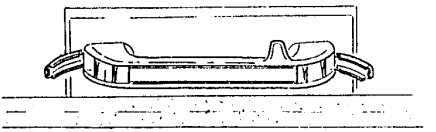

PA048L201

INTERNAL UPHOLSTERING

INTERNAL UPHOLSTERING

ROOF TRIM ..... 66 -
Assy ..... 66 - 1
Removal - Installation ..... 66 - 2
BOOT LID REAR TRIM ..... 66 - 4
Removal - Installation ..... 66 - 4
REAR PILLAR TRIM ..... 66 - 5
Assy ..... 66 - 5
Removal - Installation ..... 66 - 6
BOOT SIDE TRIM ..... 66 - 7
Removal - Installation ..... 66 - 7
CENTRAL PILLAR TRIM ..... 66 - 10
Removal - Installation ..... 66 - 10
SAFETY BELT ADJUSTING ANCHOR POINT ..... 66 - 12
Removal - Installation ..... 66 - 12
FLOOR TRIM ..... 66 - 14
Assy ..... 66 - 14
Removal - Installation ..... 66 - 15

INTERNAL UPHOLSTERING

ROOF TRIM Assy

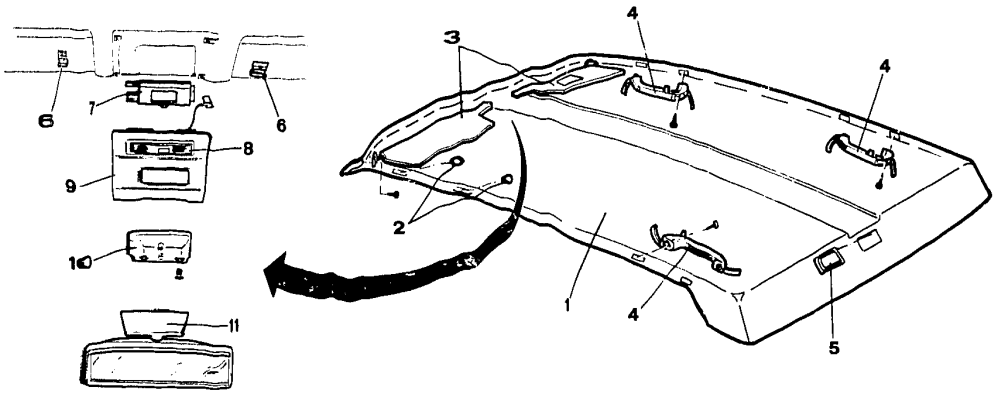

PA001L201

1 Roof trim
2 Taps
3 Sunscreens
4 Passenger handle
5 Rear dome light
6 Sun screen support
7 Clock
8 Front dome light
9 Panel
10 Rearview mirror support
11 Rearview mirror

ROOF TRIM (continued)
Removal - Installation

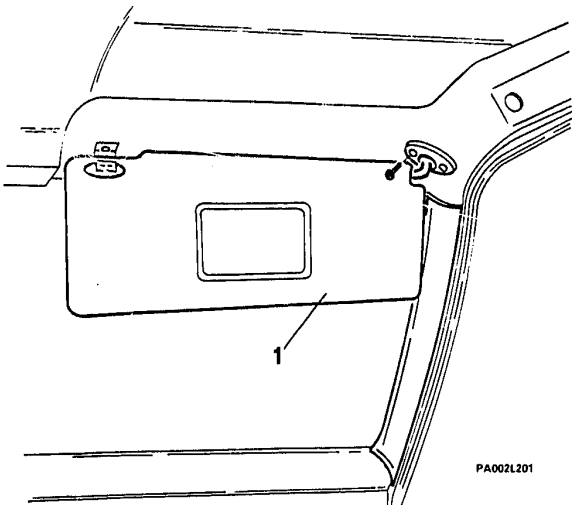

PA002L201

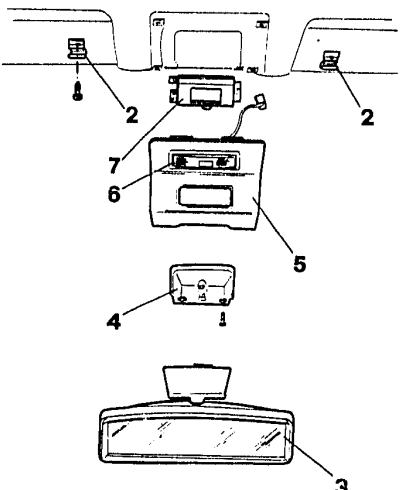

PA002L202

1. Unscrew the fixing screws and remove the sun screens.
2. Unscrew the fixing screws and remove the sun screen supports.
3. Remove the rearview mirror.
4. Unscrew the screws fixing the rearview support to the roof panel an remove the support.
5. Withdraw the panel.
6. Remove the dome light.
7. Remove the clock.

Removal - installation (continued)

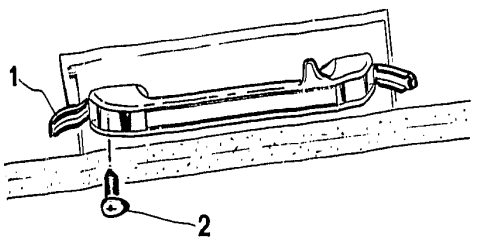

1. Open the protection of the screws securing the passenger handle to the roof panel.
2. Remove the handles by unscrewing the fixing screws.
- Remove the plugs for driver's side handle installation.
- Remove the weatherstrip of doors and boot lid in contact with the roof, move aside the upper part of the front upright upholstering.
- Remove the roof trim and extract it through the boot lid.

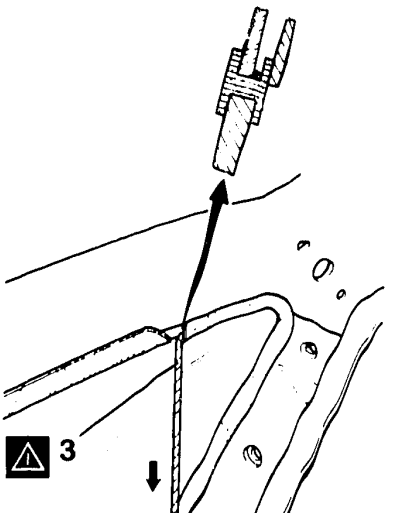

3. For the installation it is recommended to position the roof trim starting from the rear side and then make use of a cord to refit windshield gasket.

BOOT LID REAR TRIM
Removal - Installation

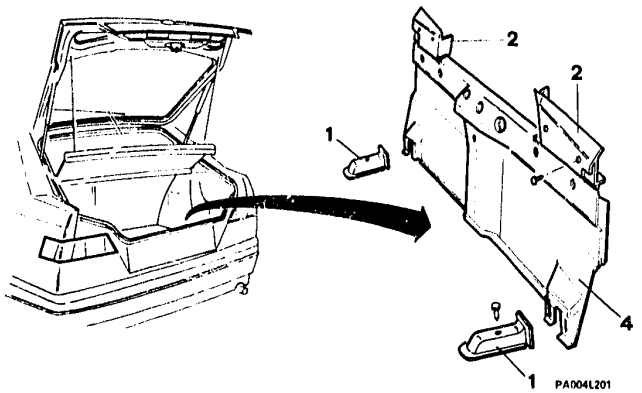

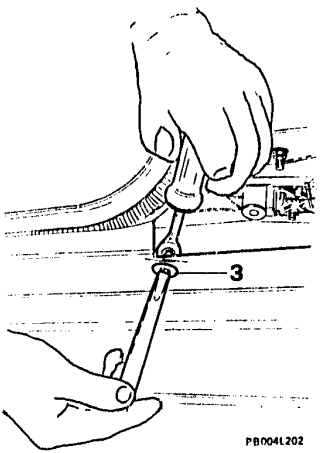

1. Using a suitable tool, remove the plastic rivets and the bumper bracket protection.
2. Remove the two plastic screws and lower the protection of the rear optical units.
3. Remove the plastic rivets by pulling them after 1/4 of turn.
4. Extract the boot lid rear trim.

REAR PILLAR TRIM
Assy

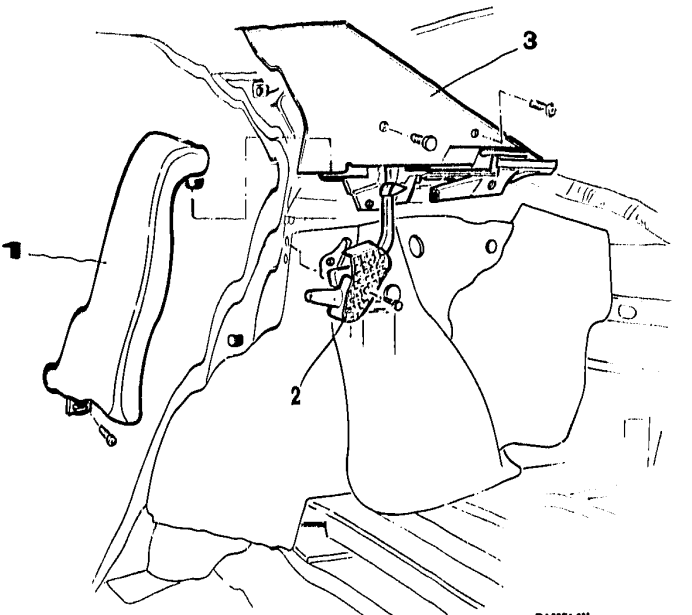

1 Seat back fixed part
2 Seat back clamping device
3 rear pillar trim

REAR PILLAR TRIM (continued)
Removal - Installation

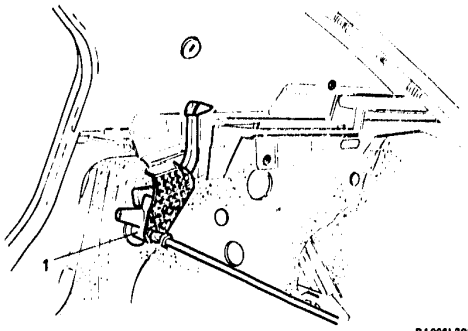

PA006L201

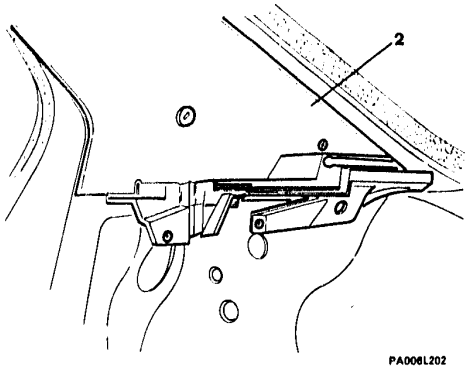

PA006L202

- Partially remove the rear door and boot lid weatherstrip.

1. Unscrew the screws fixing the seat back clamping device and remove it.
2. Remove the rear pillar trim by unscrewing the screws and removing the plastic rivet.

BOOT SIDE TRIM
Removal - Installation

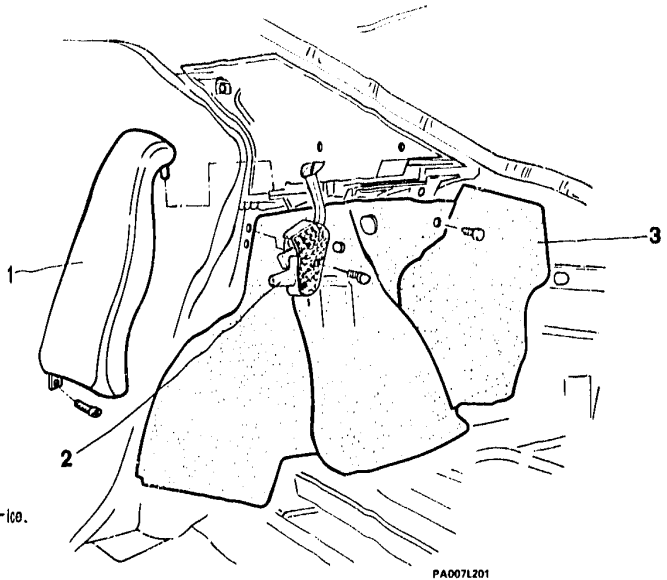

1. Remove the seat back fixed part.
2. Remove the seat back clamping device.
3. Remove the boot side trim.

BOOT SIDE TRIM
Removal - Installation (continued)

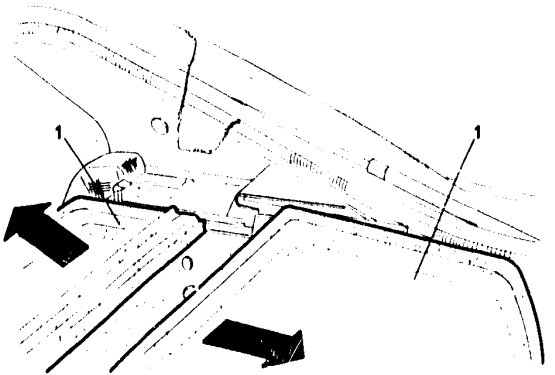

PA008L201

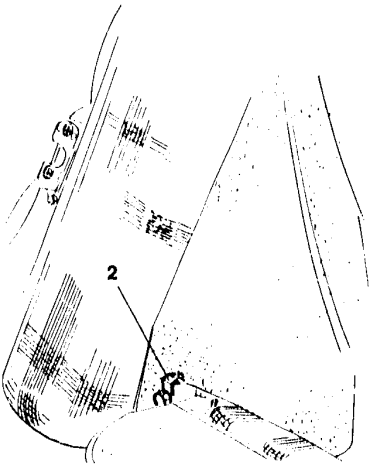

PA008L202

1. Slide out the two shelves from the guides.
- Lift and remove the seat cushion.
- Tilt the seat back onwards and remove the lower fixing nails of the trim.

2. Unscrew the two nuts fixing the seat back to the car body.

BOOT SIDE TRIM
Removal - Installation (continued)

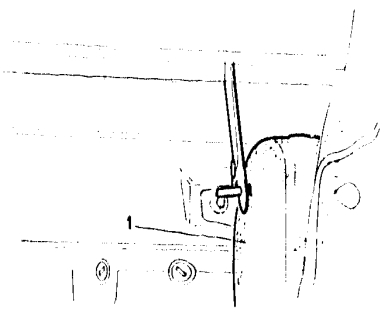

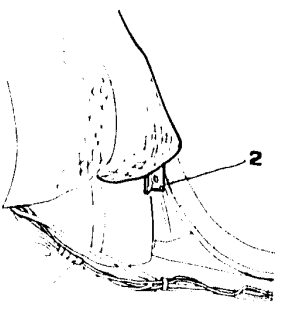

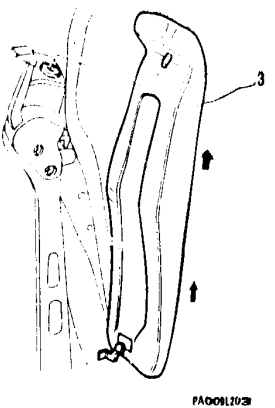

1. Lift and withdraw the seat back.
2. Remove the side screw of the seat back fixed part.
3. Lift and remove the fixed part of the seat back.

CENTRAL PILLAR TRIM

Removal - Installation

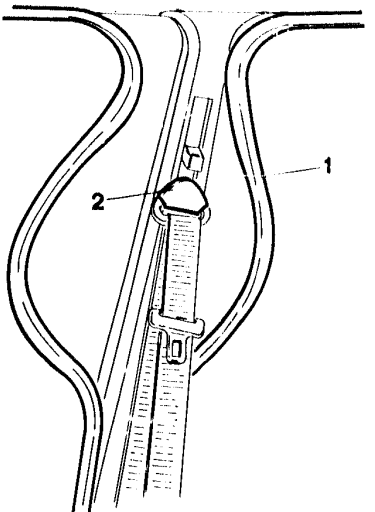

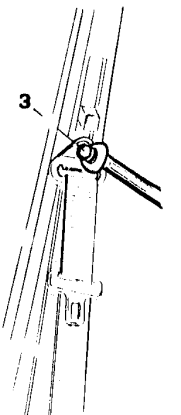

PA010L201

1. Remove the front and rear door weatherstrips in the upper area of the pillar.
2. Remove the plastic protection.
3. Unscrew the safety belt upper fixing screw.

CENTRAL PILLAR TRIM

Removal - Installation (continued)

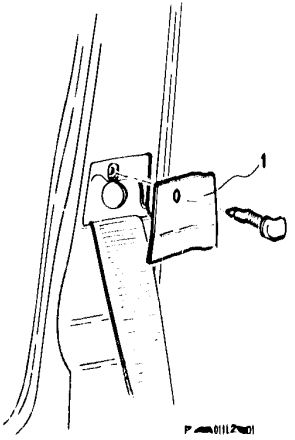

1. Remove the lower protection.
- Remove the safety belt from the roof anchoring point.

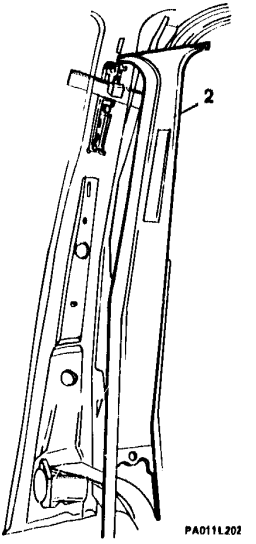

2. Detach the central pillar trim by levering the fixing rivets.

SAFETY BELT ADJUSTING ANCHOR POINT

Removal - Installation

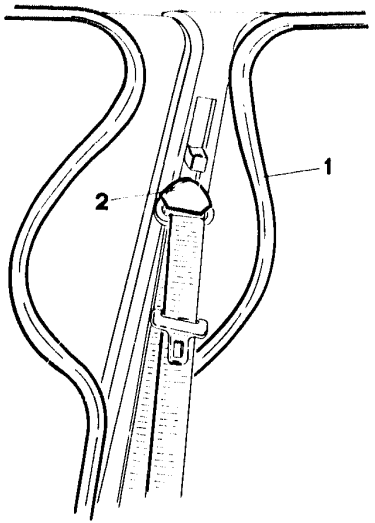

1. Remove the front and rear door weatherstrips as much as necessary.

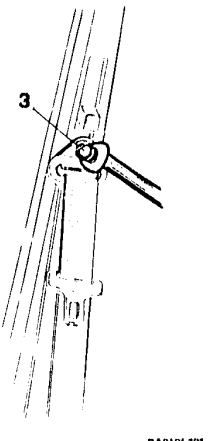

2. Remove the plastic protection.
3. Unscrew the safety belt upper fixing screw.

SAFETY BELT ADJUSTING ANCHOR POINT
Removal - Installation (continued)

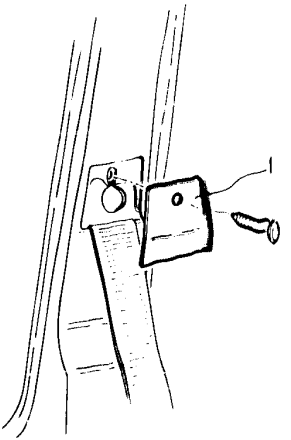

1. Remove the lower plastic protection.

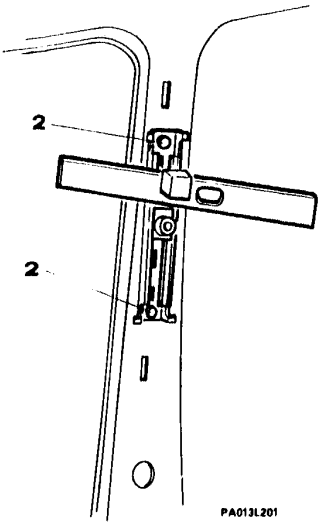

2. Move the pillar trim backwards, rotate the finishing of the safety belt anchor point, unscrew the two fixing screws and remove the anchor point.

FLOOR TRIM
Assy

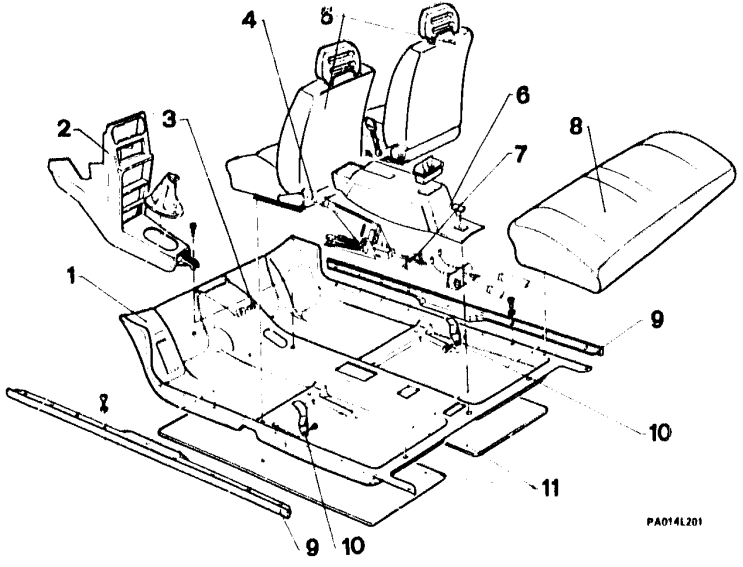

1 Floor trim
2 Central console - gearbox lever
3 Accelerator pedal end of travel
4 Handbrake
5 Front seats
6 Rear console
7 Bracket
8 Rear seat
9 Kick plate
10 Safety belt anchoring points
11 Soundproof material trim

FLOOR TRIM (continued)
Removal - Installation

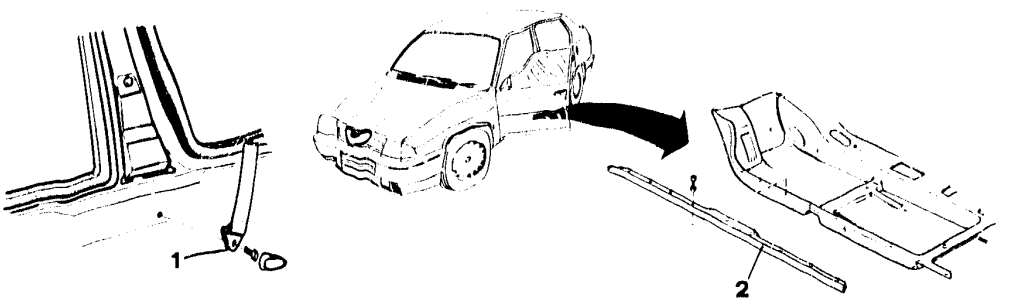

- Remove the rear seat (see 66—24).
- Remove the front seats (see 66-18).
- Remove the rear console (see 66-26).
- Remove the central console - gearbox lever (see 66-28).

1. Remove the safety belt anchoring points.
2. Unscrew the fourteen screws fixing the kick plates to the car body and remove them.

FLOOR TRIM

Removal - Installation (continued)

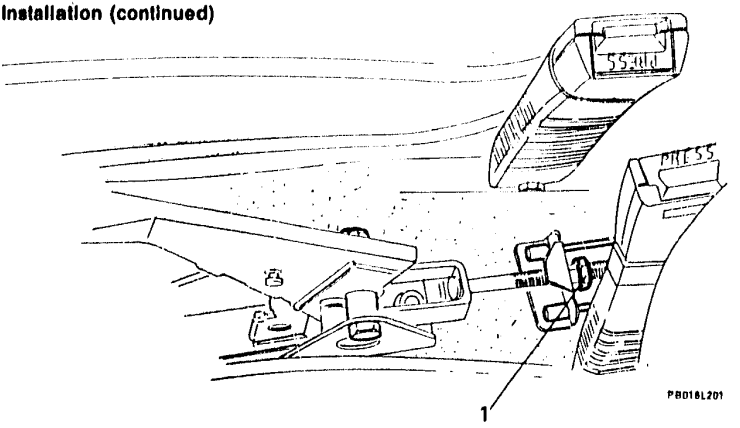

- Using a suitable tool, extract the plastic rivet fixing the accelerator pedal end of travel to the car body and remove the end of travel.
- Remove the seals of front door compartments in the part where they cover floor trim and remove the adhesive tape strips securing the trim to the body.

1. Slacken the nut and lock nut of parking brake adjustment fork and withdraw the two cables from the bracket.

- Remove the floor trim by withdrawing it from the parking brake and, if necessary, remove the soundproof material trim.



FRONT SEATS

REAR SEATS

REAR CONSOLE

FRONT SEATS

ASSY.....66 - 17
REMOVAL - INSTALLATION.....66 - 18
DISASSEMBLY.....66 - 19
HEADREST (Pre-modification).....66 - 22
HEADREST (Post-modification).....66 - 23

REAR SEATS

ASSY.....66 - 24
REMOVAL - INSTALLATION.....66 - 25

REAR CONSOLE

ASSY.....66 - 26
REMOVAL - INSTALLATION.....66 - 27

FRONT SEATS
ASSY

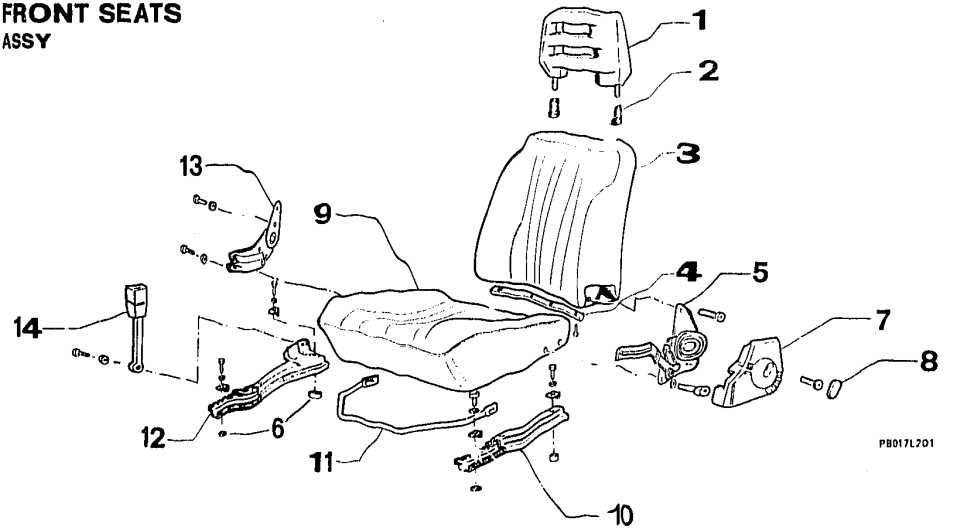

1 Headrest
2 Plastic bush
3 Seat back
4 Plastic moulding
5 Seat back adjusting device
6 Spacers
7 Plastic trim
8 Screw cover
9 Seat
10 Guide for seat longitudinal adjustment
11 Seat longitudinal adjustment control lever
12 Guide for seat longitudinal adjustment
13 Seat back inclination adjustment device
14 Seat belt anchoring point

FRONT SEATS (continued)

REMOVAL - INSTALLATION

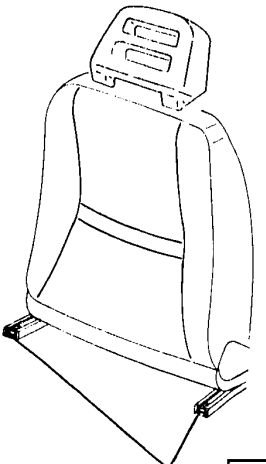

1 10 ÷ 11 Nm (1.1 ÷ 1.2 Kgm)

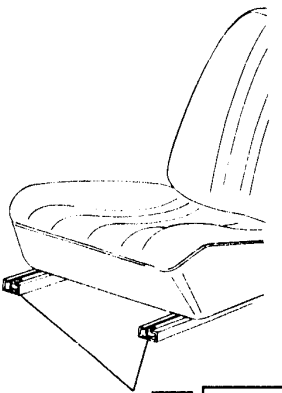

2 10 ÷ 11 Nm (1.1 ÷ 1.2 Kgm)

PA018L201

1. Move the seat completely onwards and unscrew the two rear screws fixing the guides to the floor.
2. Move the seat completely backwards and unscrew the two front screws fixing the guides to the floor.

- Remove the seat, together with the guides, from the vehicle.
- Keep the spacers apart.

FRONT SEATS (continued)

DISASSEMBLY

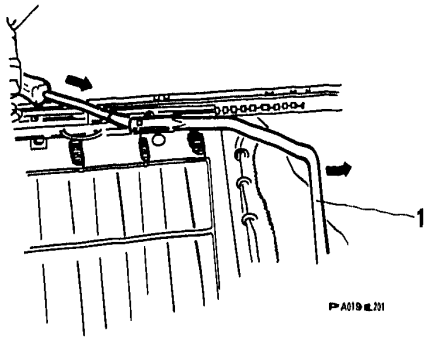

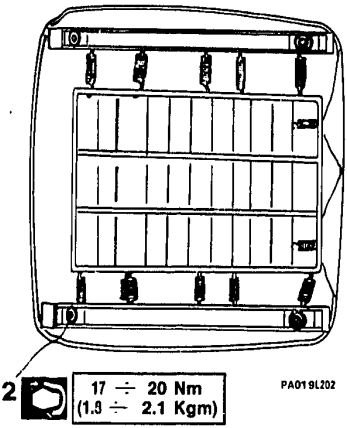

1. Using a suitable tool, release the seat longitudinal adjustment control lever from the guides.

2. Remove the guides by unscrewing the four screws fixing the seat.

FRONT SEATS

DISASSEMBLY (continued)

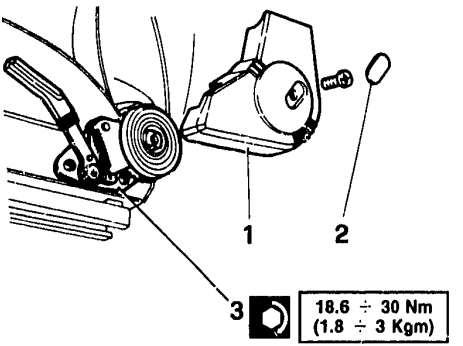

1. Remove the covering plate.
2. Unscrew the screw fixing the cover to the device and remove the covering plate.

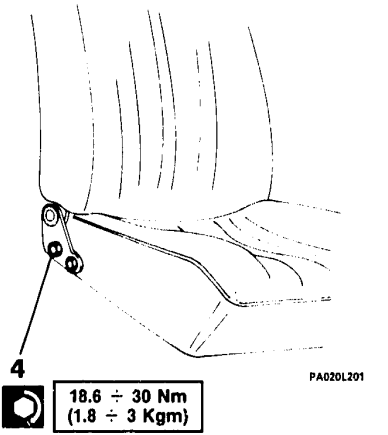

3. Unscrew the screws fixing the device to the seat and remove the device.
4. Unscrew the screws fixing the hinge to the seat and remove hte hinge.

FRONT SEATS
DISASSEMBLY (continued)

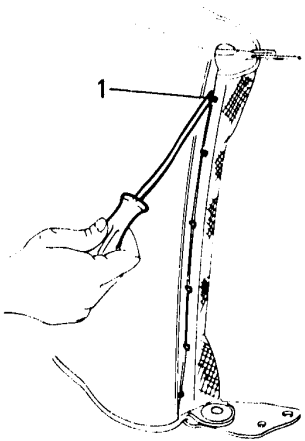

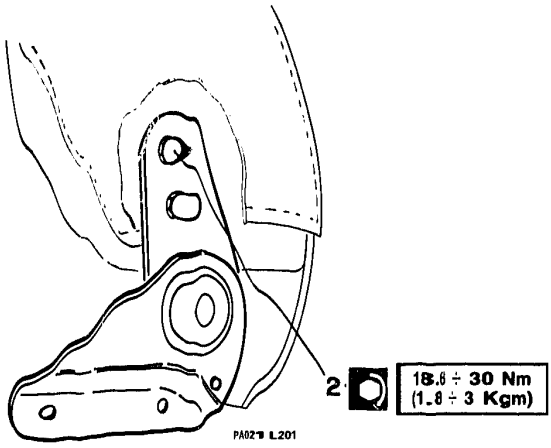

- Release the two retaining springs of the seat upholstery.

1. Lift the clips blocking the seatback upholstery, turn it inside out and lift it until protections of seatback adjusting device and hinge securing screws are uncovered.
2. Unscrew the four screws fixing the seatback adjusting device and the hinge to the seatback, then remove them.

FRONT SEATS (continued)

HEADREST (Pre-modification)

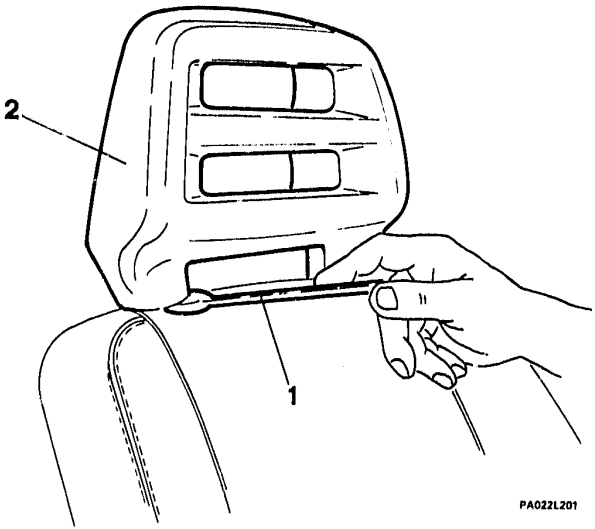

1. Using a suitable wrench, unscrew the two plastic bushes, taking care to unscrew them at the same time not do damage the threading.
2. Lift the headrest.

FRONT SEATS (continued)

HEAD REST (Post-modification)

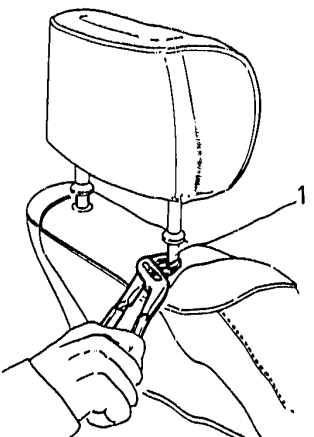

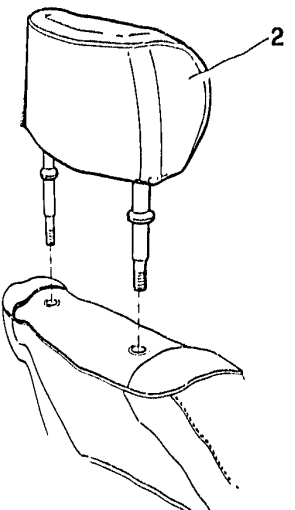

- Raise the headrest as far as possible.

1. After raising the rubber protection, unscrew the two threaded rods both at the same time to avoid damaging the threads.

2. Remove the headrest.

REAR SEATS

ASSY

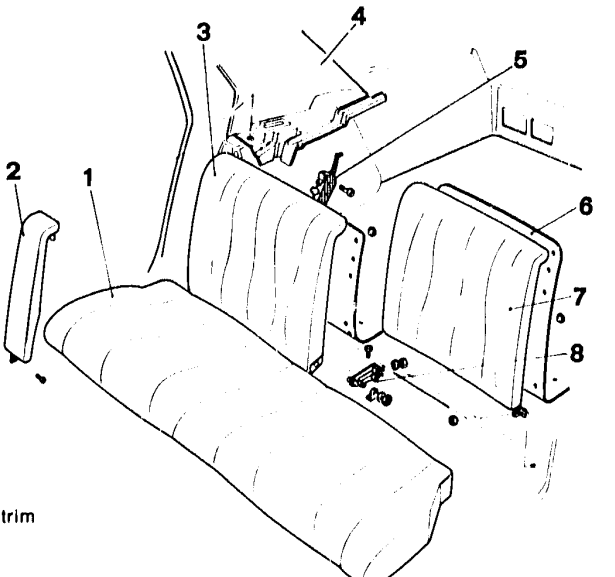

1 Seat
2 Seat back fixed part
3 Seat back
4 Rear pillar trim
5 Seat back clamping device
6 Luggage compartment ans seat back trim
7 Seat back
8 Seat back hinge

REAR SEATS (continued)

REMOVAL - INSTALLATION

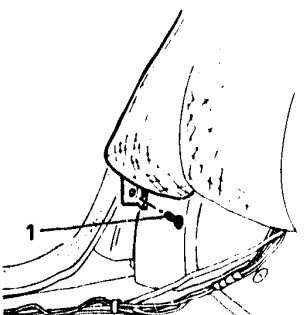

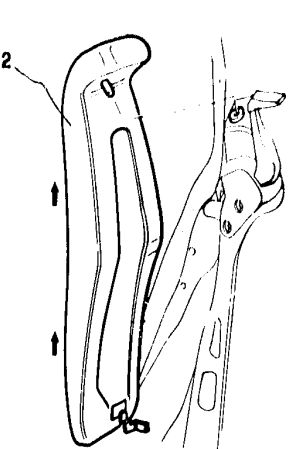

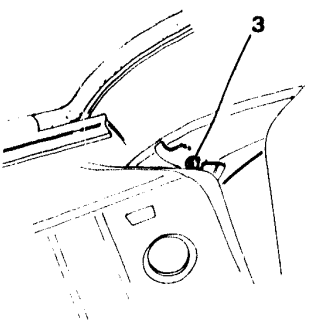

Take care not to dirty the seat and seat back upholstery.

- Lift and remove the seat.

1. Unscrew the screw securing the seat back fixed part to the car body.
2. Lift and remove the seat back fixed part.
3. Unscrew the nut fixing the seat back to the car body and remove the seat back.

- Repeat the operation to remove the other seat back.

REAR CONSOLE
ASSY

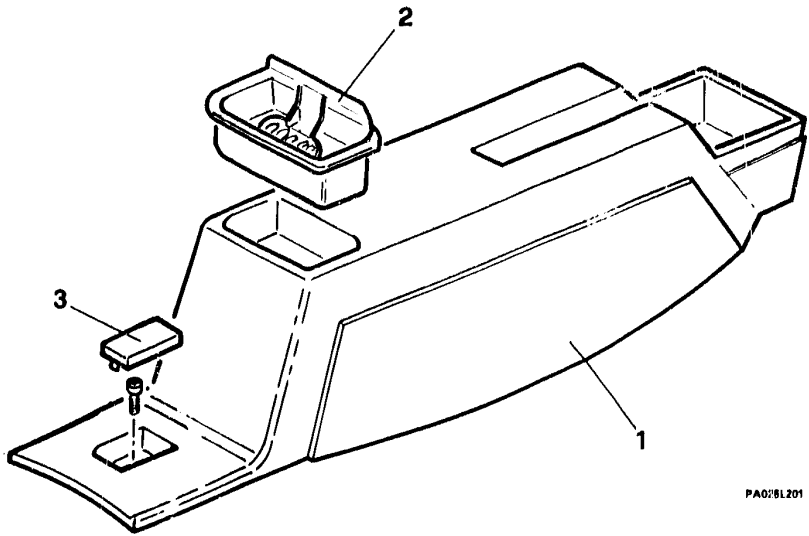

1 Console
2 Ash-tray
3 Plastic cover

REAR CONSOLE (continued)
REMOVAL - INSTALLATION

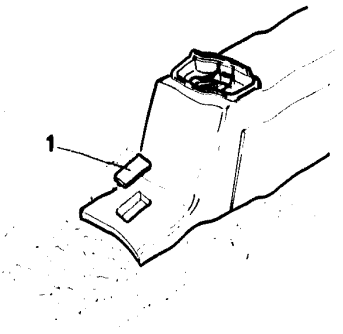

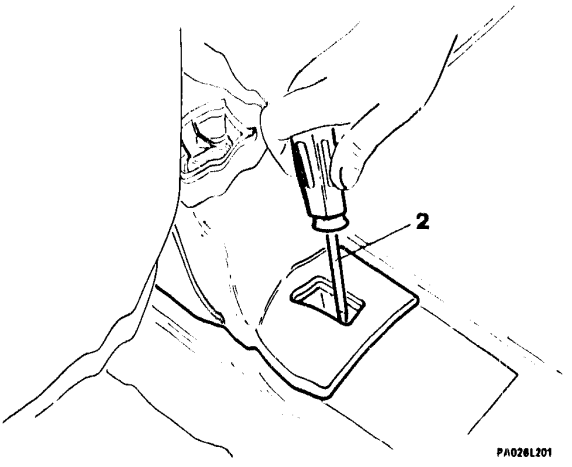

1. Remove the plastic cover.
2. Unscrew the fixing screw.
- Lift the parking brake control lever.
- Move the console backwards as much as necessary and remove it.
- If necessary, remove the ash-tray.

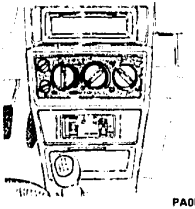

PA050L201

CENTRAL CONSOLE - GEAR SHIFT LEVER

CENTRAL CONSOLE - GEAR SHIFT LEVER

ASSY..... 66 - 28
REMOVAL - INSTALLATION ..... 66 - 29

CENTRAL CONSOLE-GEARSHIFT LEVER ASSY

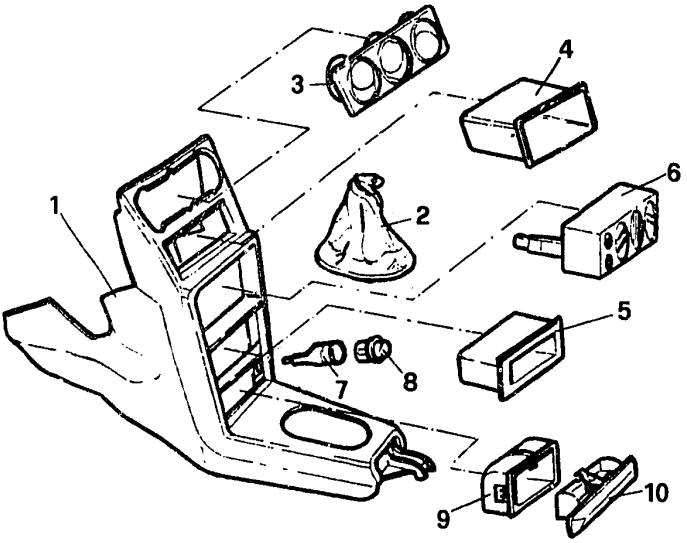

1 Central console-gear shift lever
2 Rubber bellows
3 Air vents
4 Radio housing
5 Glove box
6 Climatisation control unit
7 Cigar-lighter seat
8 Cigar-lighter
9 Ash-tray housing
10 Ash-tray

CENTRAL CONSOLE - GEAR SHIFT LEVER (continued)

REMOVAL - INSTALLATION

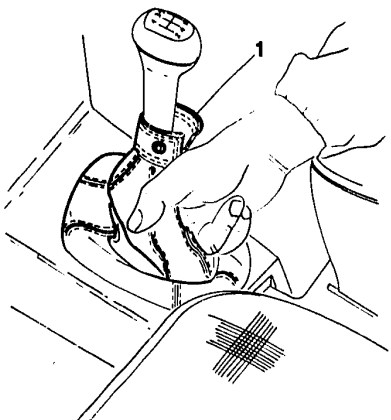

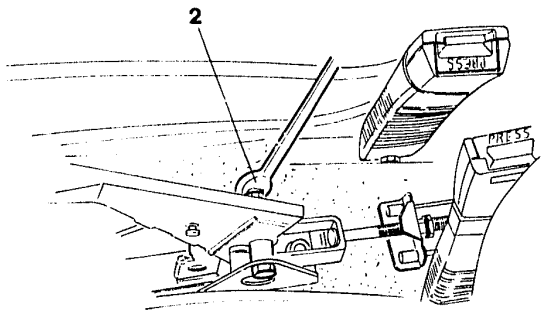

PA028L201

- Remove the rear console (See 66-26).

1. Release the four clips fixing the lever rubber bellows and remove it.

2. Remove the bolt of the parking brake lever.

Do not intervene on the brake adjusting nut.

CENTRAL CONSOLE - GEAR SHIFT LEVER

REMOVAL - INSTALLATION (continued)

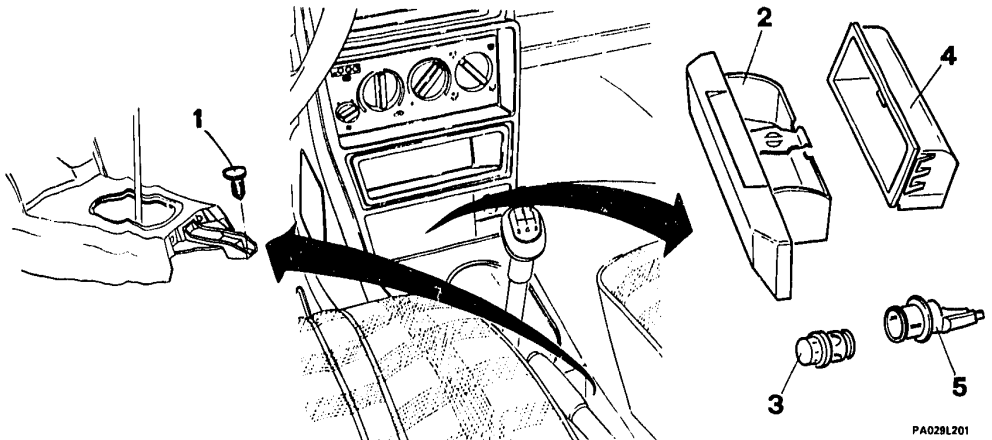

1. Unscrew the rear screw fixing the gear shift lever console.
2. Extract the front ash-tray.
3. Extract the cigar-lighter.
4. Extract the ash-tray housing.
5. Extract the cigar-lighter seat.

CENTRAL CONSOLE - GEAR SHIFT LEVER

REMOVAL - INSTALLATION (continued)

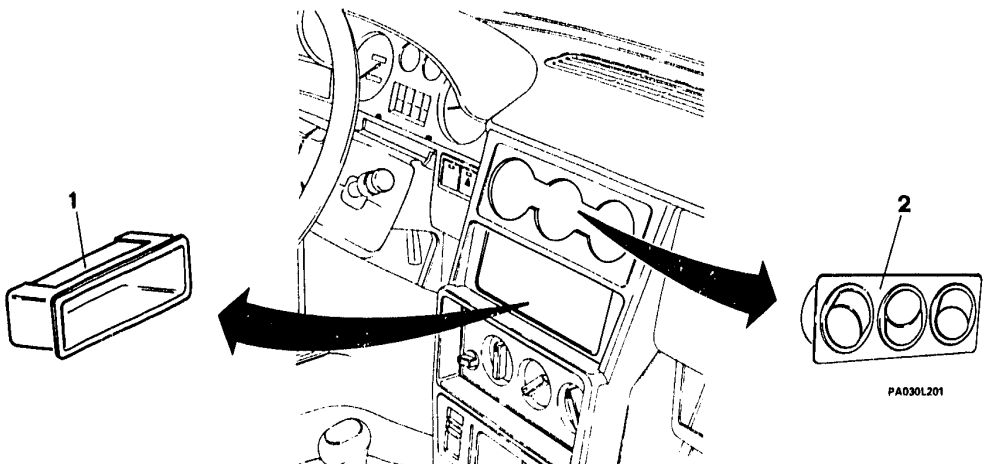

1. Extract the radio housing.
2. Extract the air vents.

CENTRAL CONSOLE - GEAR SHIFT LEVER

REMOVAL - INSTALLATION (continued)

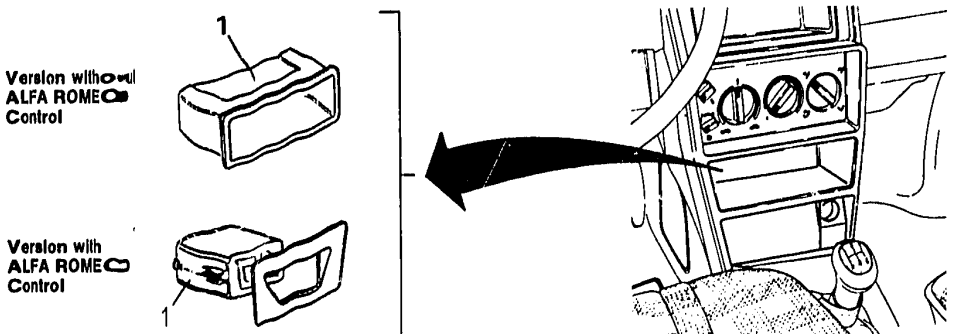

PA031L201

1. Remove the glove box or, where installed, remove the ALFA ROMEO Control (See GR. 43).

CENTRAL CONSOLE - GEAR SHIFT LEVER

REMOVAL - INSTALLATION (continued)

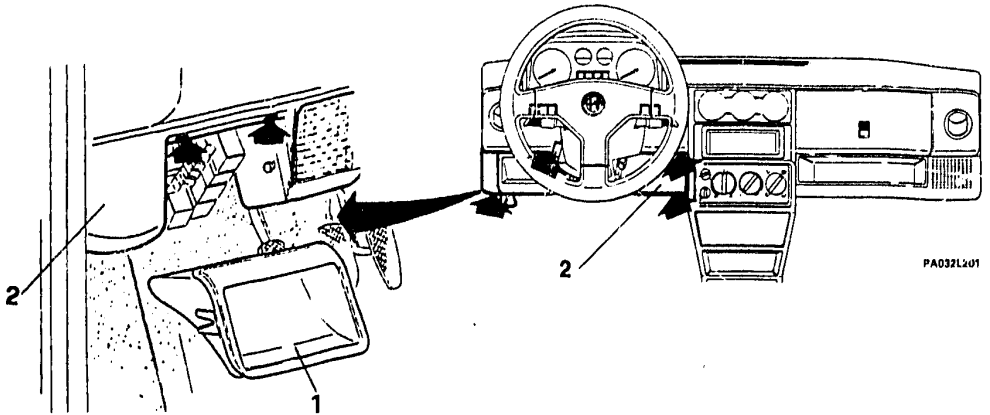

1. Remove the fuse box cover.
2. Unscrew the fixing screws indicated and remove the left dashboard lower part.

CENTRAL CONSOLE - GEAR SHIFT LEVER

REMOVAL - INSTALLATION (continued)

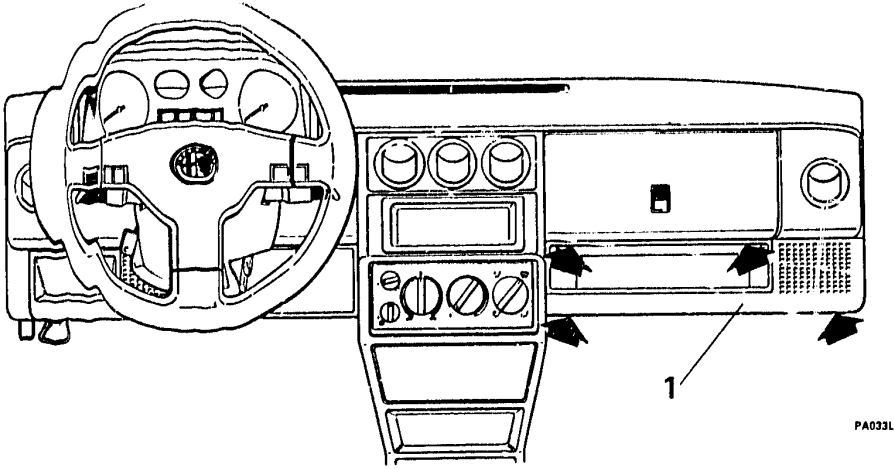

1. Remove the right dashboard lower part by unscrewing the fixing screws.

CENTRAL CONSOLE - GEAR SHIFT LEVER

REMOVAL - INSTALLATION (continued)

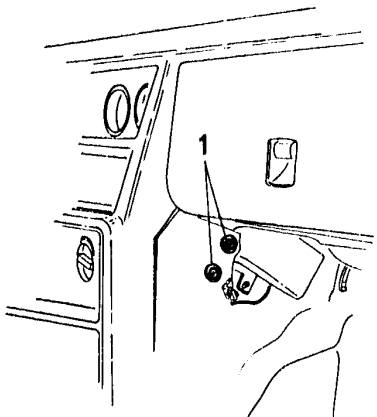

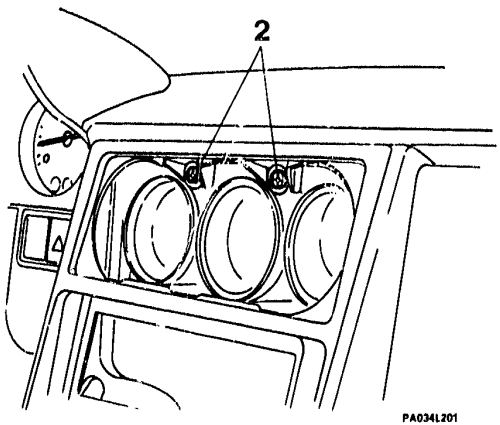

1. Remove the side screws connecting the console to the air conditioner controls.
2. Unscrew the two screws placed in the air intake compartment.

- Extract the central console.

When re-assembling, carefully check that the central consolematches the special springs.

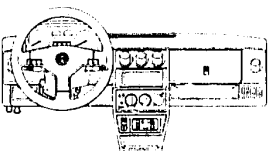

PR051L201

DASHBOARD

REAR SAFETY BELTS

TECHNICAL SPECIFICATIONS AND NOTES

DASHBOARD

ASSY..... 66 - 36
REMOVAL..... 66 - 38
DISASSEMBLY..... 66 - 42
INSTALLATION .....66 - 43

REAR SAFETY BELTS

INDICATIONS FOR THE ASSEMBLY .....66 - 45

TECHNICAL SPECIFICATIONS AND NOTES

TIGHTENING TORQUES.....66 - 48

DASHBOARD

ASSY

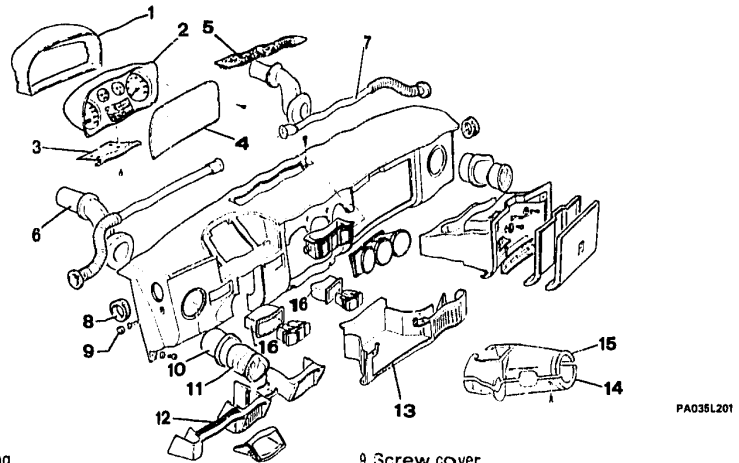

1 Dashboard finishing
2 Dashboard
3 Plate
4 Dashboard protecting screen
5 Windshield defrosting grill
6 Dynamic air ducts
7 Side defrosting air duct
8 Side defrosting air duct bellows
9 Screw cover
10 Side air vent support
11 Dynamic air side vent
12 Dashboard lower part left trim
13 Dashboard lower part right trim
14 Steering column lower half-cover
15 Steering column upper half-cover
16 Switch holder plate

DASHBOARD
ASSY (continued)

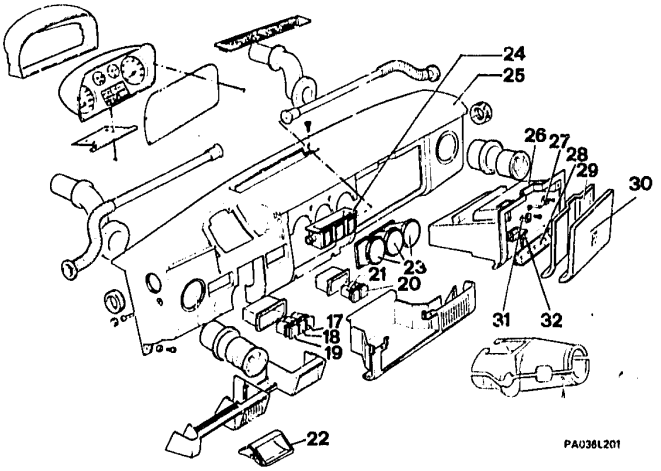

17 Foglight switch (if installed)
18 Rear foglight switch
19 Heated window switch
20 Hazard light switch
21 Spare switch
22 Fuse box cover
23 Adjustable air vents
24 Defrosting air main duct
25 Dashboard
26 Glove box
27 Glove box lid latch hook
28 Hinge
29 Glove box inner trim
30 Glove box compartment lid
31 Dome light switch
32 Glove box compartment light

DASHBOARD (continued)

REMOVAL

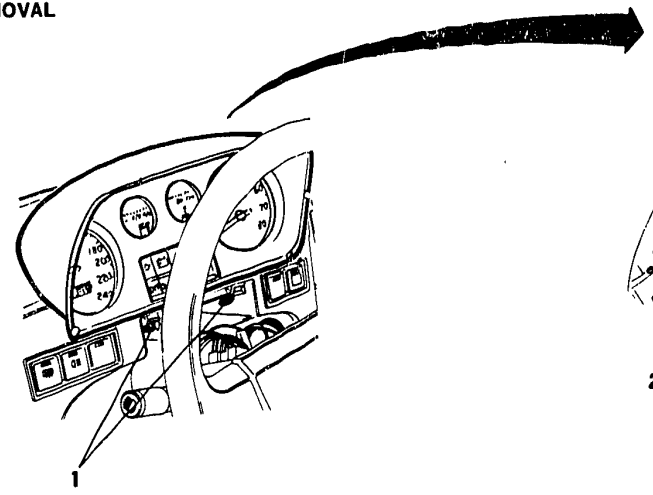

- Remove the steering column half-covers by unscrewing the five fixing screws placed under the lower half-cover.

1. Unscrew the four lower screws fixing the instrument panel and remove the plate.

- Remove the instrument panel finishing.

2. Remove the two upper fixing screws.
3. Lift the instrument panel, disconnect the wiring and remove the panel.

DASHBOARD
REMOVAL (continued)

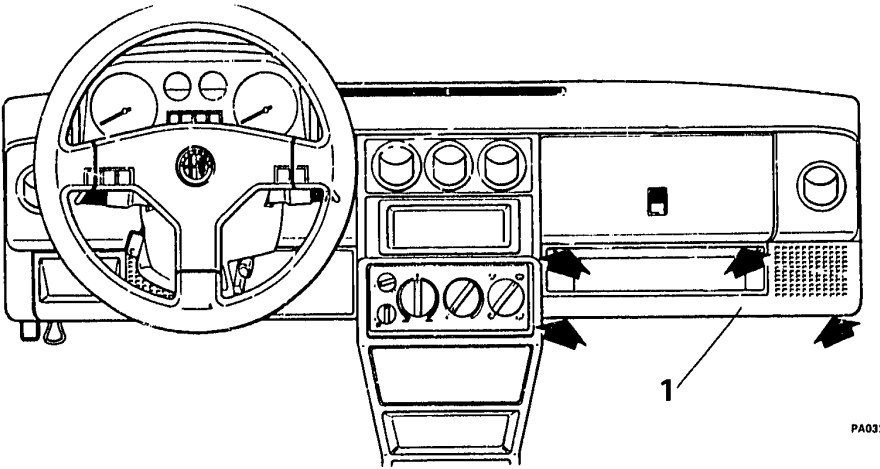

1. Remove the dashboard lower part right trim by unscrewing the fixing screw.

DASHBOARD
REMOVAL (continued)

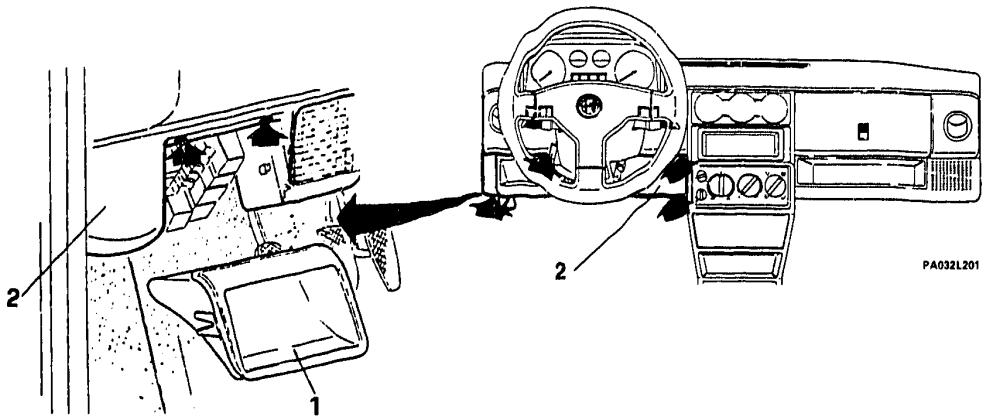

1. Extract the fuse box cover.
2. Unscrew the indicated fixing screws and remove the dashboard lower part left trim.

- Separate the climatisation controls from the central console.
- Disconnect all wiring and remove the central console.

⇩

DASHBOARD

REMOVAL (continued)

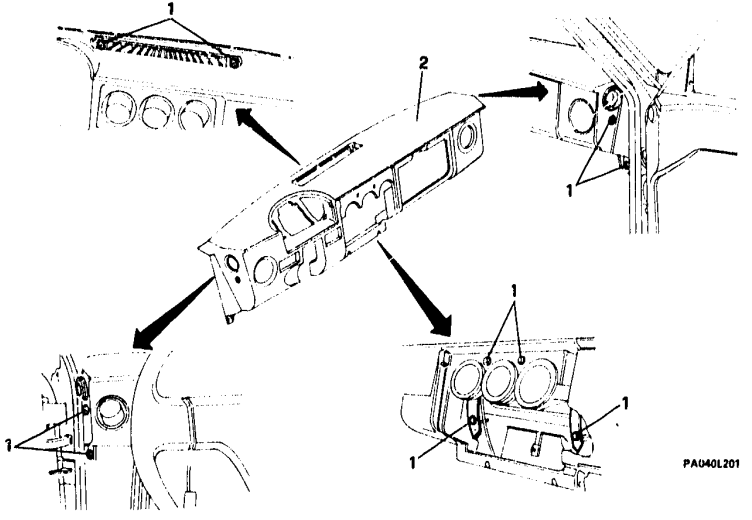

- Remove the pressure-mounted windshield defrosting grill.

1. Unscrew the dashboard fixing screws.
2. Lift the dashboard, disconnect the wiring and remove it.

DASHBOARD (continued)

DISASSEMBLY

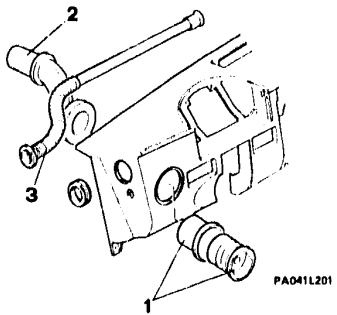

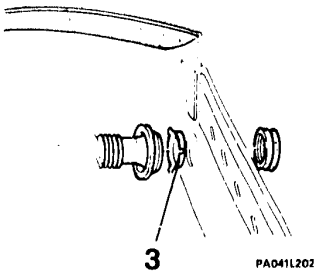

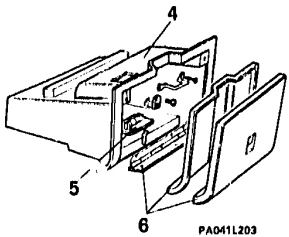

- If necessary, dismantle the dashboard various components, by operating as follows.
1. Withdraw the side vents from the relevant supports, then remove the supports from their seat by releasing the securing clamps.
2. Remove the pressure-mounted air ducts.
3. Detach the pressure-mounted ducts and the bellows secured by means of tab rings.
4. Disconnect the glove box light wiring, unscrew the fixing screws and remove the glove box.
5. Remove the glove box light, and the relevant switch from the glove box compartment.
6. Remove the screws fixing the lid to the hinge and to the trim, then separate them.

DASHBOARD (continued)
INSTALLATION

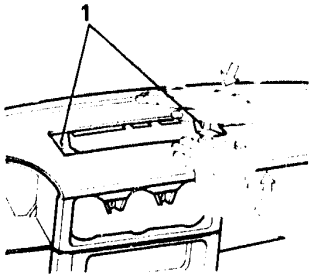

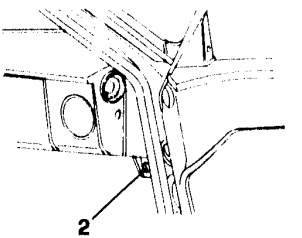

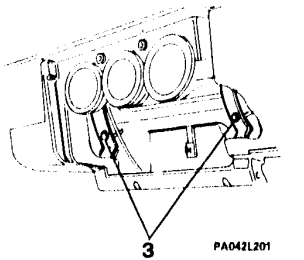

- Make sure that the dashboard is centered between the two front pillars and there are no interferences between the dashboard front edge and the windshield weatherstrip.
- Push the dashboard central area onwards, with one hand pressing on the protruding edge and the other one on the upper surface, so as to insert the front instrument panel pad under the windshield weatherstrip. With this operation, perfect mating of the dashboard surface with the central brackets of the upper fixing will be obtained.

1. By keeping the dashboard pressed onwards, screw down the two upper screws fixing the dashboard.

- After the installation, misalignment between air ducts on dashboard surface and the windshield defrosting grill should not be noticed.
  If the above-mentioned condition is not met, repeat the positioning procedures.

2. By keeping the dashboard ends lifted and pushed onwards, screw down, on each side, the lower fixing screws.
3. Screw down the the two central screws fixing the dashboard.



DASHBOARD

INSTALLATION (continued)

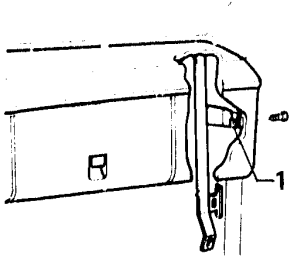

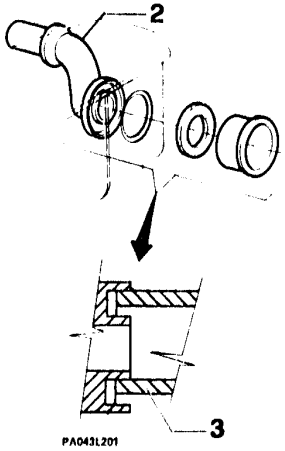

1. Screw down the upper fixing screws at the two dashboard ends.
- Refit the air ducts, by checking their correct fitment on the duct seats.
2. By operating under the dashboard, fit the air ducts in the relevant seats machined in the dashboard steel sheet.
3. Insert in the dashboard seats the two side vent supports, checking their mating with the air duct upper edge.
- Complete re-assembly operations of all the components, by reversing removal procedures.

REAR SAFETY BELTS

INDICATIONS FOR THE ASSEMBLY

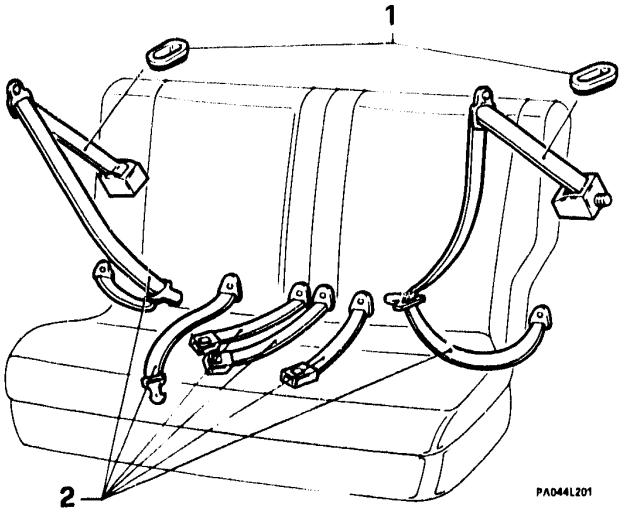

1 Finishing plate

2 Safety belt

REAR SAFETY BELTS

INDICATIONS FOR THE ASSEMBLY (continued)

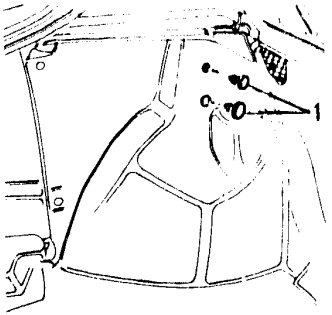

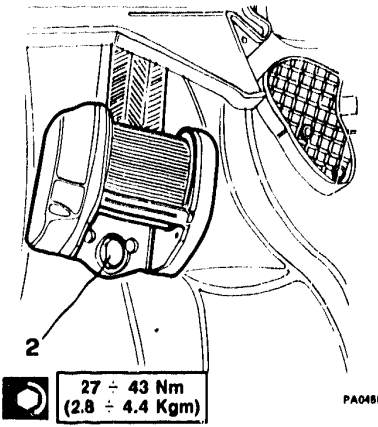

- Lift and remove the seat.
- Remove the movable shelf under the rear window.
- Lower the seat back.

1. Remove the two plastiv plugs from boot compartment side trim.
- Slide the safety belt through the special opening and the finishing plate.

2. Secure the rewinder.

REAR SAFETY BELTS

INDICATIONS FOR THE ASSEMBLY (continued)

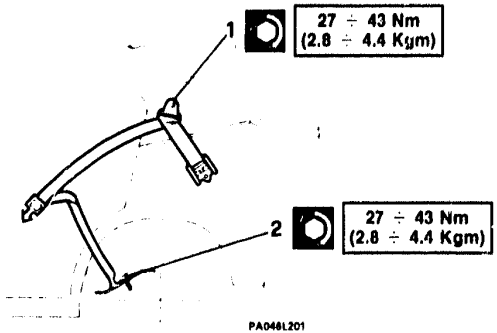

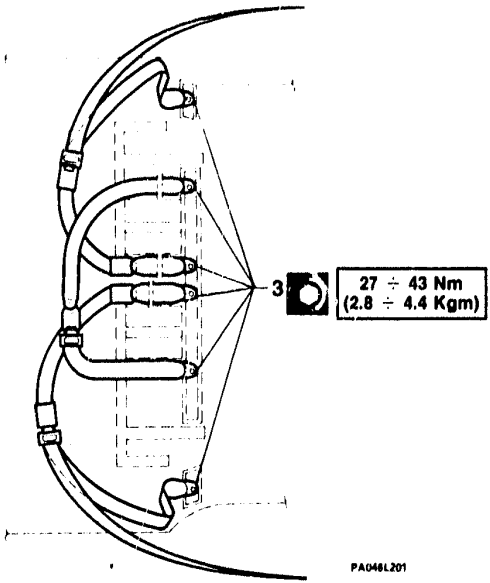

1. Remove the plastic cap on the rear pillar and secure the safety belt support.
2. Secure the anchoring bracket of the safety belt to the boot compartment floor.
3. Secure the other safety belts according to the scheme.

In the case of collision with safety belts fastened, it is suggested to replace the belts even if they do not seem to be damaged.

TECHNICAL SPECIFICATIONS AND NOTES

TIGHTENING TORQUES

Item \ Unit of measure	Nm	Kgm
Guide-to-seat fixing screws	17 ÷ 20	1.8 ÷ 2.1
Seat guide-to-floor fixing screws	10 ÷ 11	1.1 ÷ 1.2
Seat back adjusting device and hinge fixing screws	18.6 ÷ 30	1.9 ÷ 3.1
Safety belt anchoring point screws	27 ÷ 43	2.9 ÷ 4.4

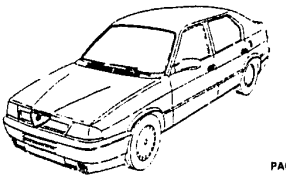

PA032M201

BUMPER

RADIATOR GRILLE

AIR INTAKE GRILLE

FRONT BUMPER

ASSY ..... 75 - 1

REMOVAL - INSTALLATION ..... 75 - 2

REAR BUMPER

ASSY ..... 75 - 5

REMOVAL - INSTALLATION ..... 75 - 6

RADIATOR GRILLE

ASSY ..... 75 - 8

REMOVAL - INSTALLATION ..... 75 - 9

AIR INTAKE GRILLE

REMOVAL - INSTALLATION ..... 75 - 10

FRONT BUMPER
ASSY

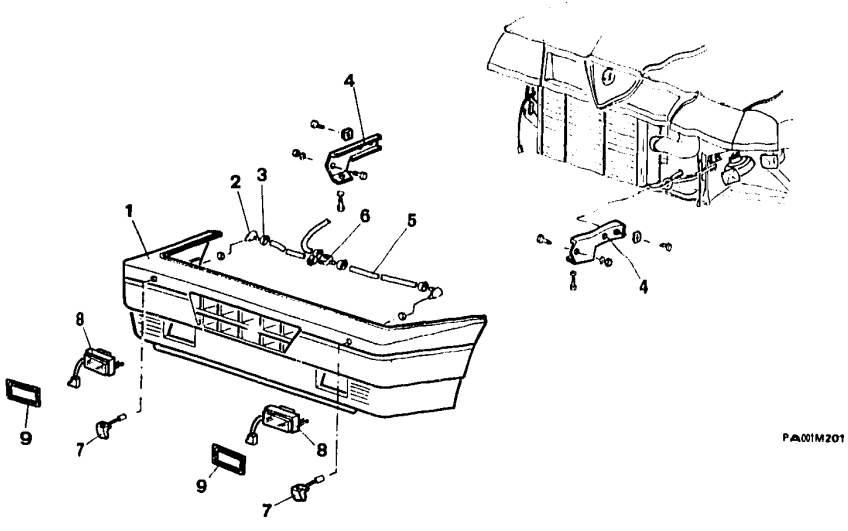

1 Bumper
2 Union
3 Clamp
4 Bumper supporting bracket
5 Piping
6 T-union
7 Spray nozzles
8 Foglights
9 Foglight frame

FRONT BUMPER (continued)

REMOVAL - INSTALLATION

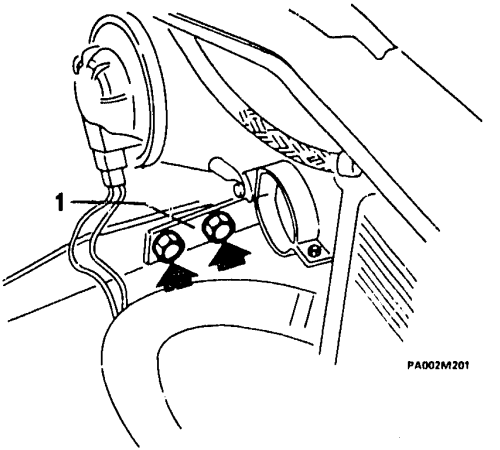

- Remove the front fenders (right fender only for the Turbodiesel version).

1. Remove the screws fixing the left-side bumper bracket. In the Turbodiesel versions, it is necessary to unscrew the fuel filter fixing screws and move the filter aside without disconnecting the pipes, to reach the bracket securing screws.

FRONT BUMPER

REMOVAL - INSTALLATION (continued)

1. Unscrew the right-side bumper bracket fixing screws.

   In the injection and Turbodiesel versions, it is necessary to remove the complete air filter, to reach the bracket securing screws (See **GR. 04**).

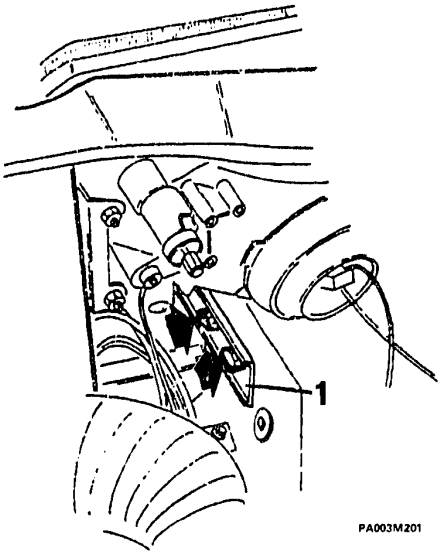

FRONT BUMPER
REMOVAL - INSTALLATION (continued)

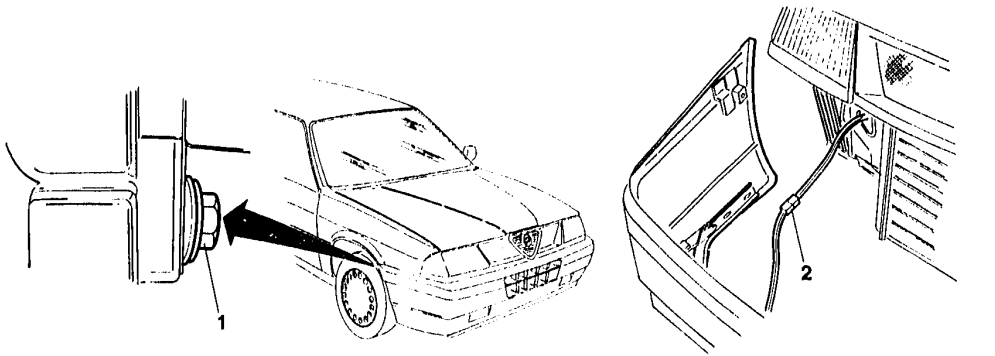

1. Unscrew the two spacer-bumper connecting screws.
2. Detach bumper fron the vehicle and disconnect the fog-light connections (if installed).

REAR BUMPER
ASSY

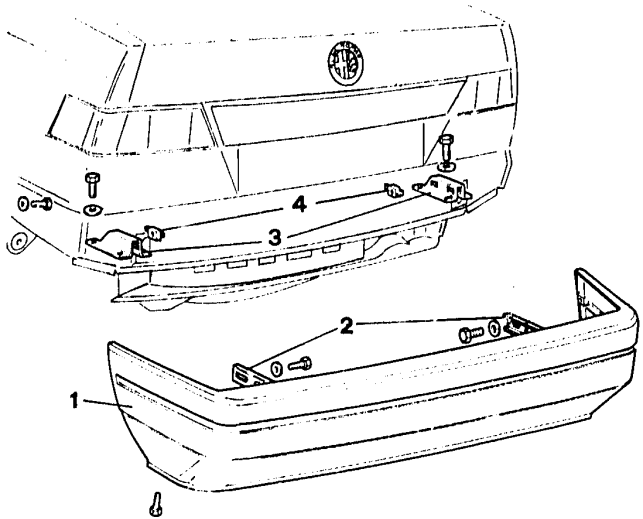

PA005M201

1 Bumper
2 Bumper bracket
3 Bracket in boot compartment
4 Plug nut

REAR BUMPER

REMOVAL - INSTALLATION

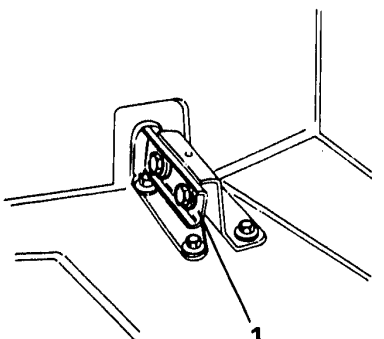

PA006M201

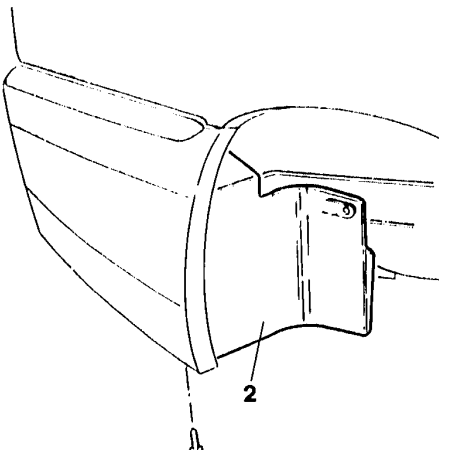

PA006M202

- Lift the boot compartment trim.
- Withdraw the bracket protecting plate.

1. On both sides, unscrew the bumper bracket-boot compartment bracket fixing screws.
2. Remove the fender-to-bumper fixing screws.



REAR BUMPER

REMOVAL - INSTALLATION (continued)

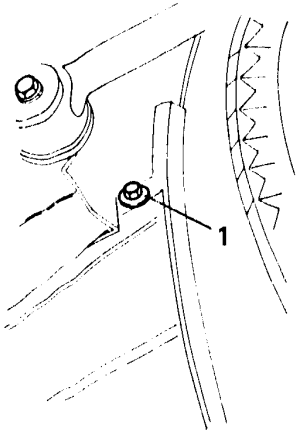

PA007M201

1. Unscrew the two bumper-to-body fixing screws.
- Remove the bumper.

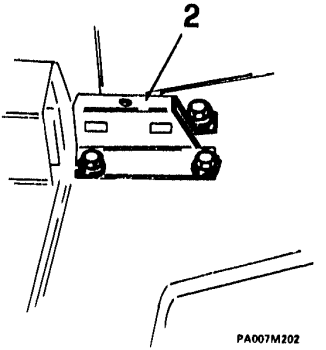

PA007M202

2. If necessary, remove the boot compartment brackets by unscrewing the fixing screws to the body.

RADIATOR GRILLE ASSY

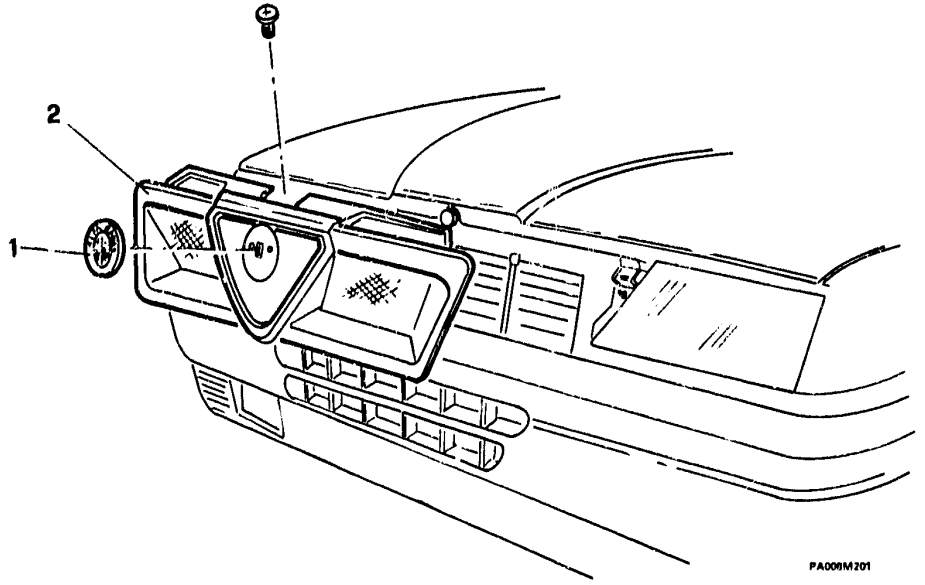

1. Badge
2. Grille

RADIATOR GRILLE (continued)

REMOVAL - INSTALLATION

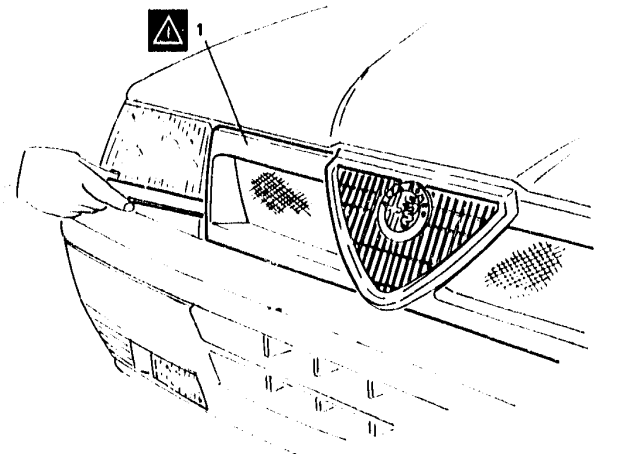

PA009M201

- Completely open the bonnet.
- Using a magnetised screwdriver, unscrew the radiator grille-to-body fixing screw.

1. Detach the radiator grille by means of a suitable tool.

As the radiator grille is in plastic material, when operating, pay attention not to force excessively.

It is recommended to avoid contact of mineral il with the radiator grille.

AIR INTAKE GRILLE
REMOVAL - INSTALLATION

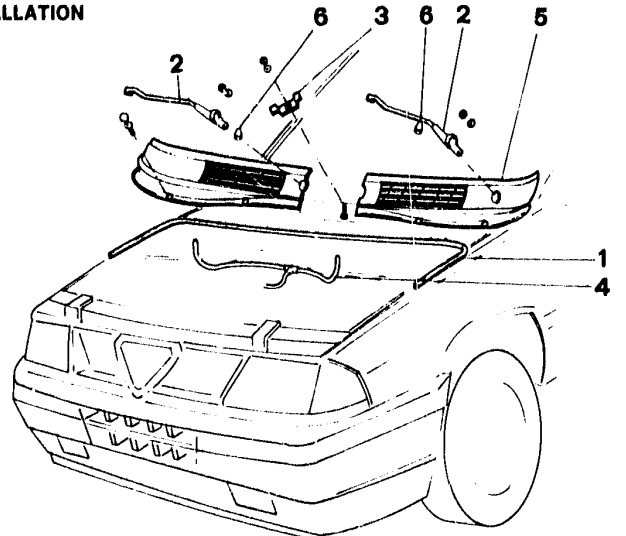

- Open the bonnet.
1. Detach the gasket
2. Remove the windshield wiper arms
3. Unscrew the 4 crossed-head screws and the central screw with its plate.
4. Disconnect the delivery pipe to the wiper arms from the check valve which is closer to the wiper arms.
5. Extract the grille by releasing it from the plastic clips.
6. Extract the sprayers.

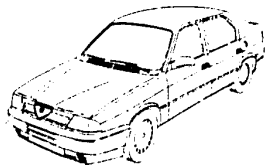

WINDSHIELD

REAR WINDOW

WINDSHIELD

REMOVAL ..... 75 - 11
INSTALLATION ..... 75 - 15
Instructions for the sealing compound application ..... 75 - 15

REAR WINDOW

REMOVAL ..... 75 - 18
INSTALLATION ..... 75 - 21
Instructions for the sealing compound application ..... 75 - 21

WINDSHIELD

REMOVAL

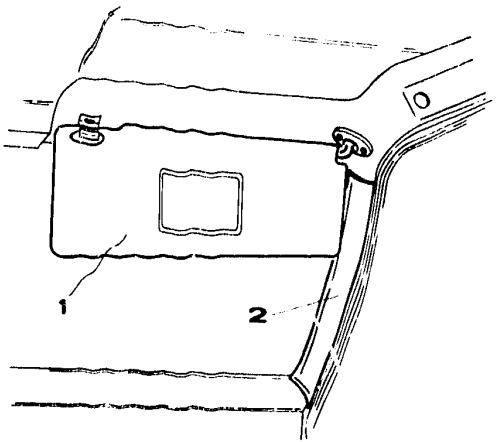

PA011M201

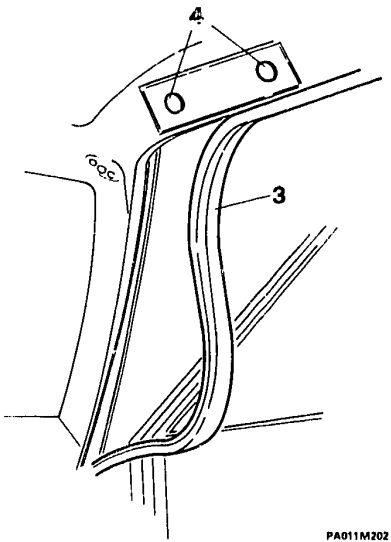

PA011M202

- Remove the air intake grille
1. Remove the sun visors.
2. Remove the side pillar trims.
3. Partially remove the two door weatherstrips.
4. Remove the roof fixing plugs.

WINDSHIELD

REMOVAL (continued)

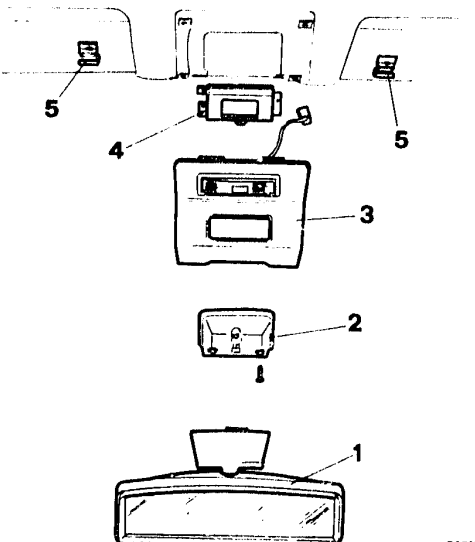

1. Remove the rearview mirror.
2. Remove the mirror support.
3. Remove the dome light
- Disconnect the clock.
4. Remove the clock.
5. Remove the two supports of the sun visors.

WINDSHIELD

REMOVAL (continued)

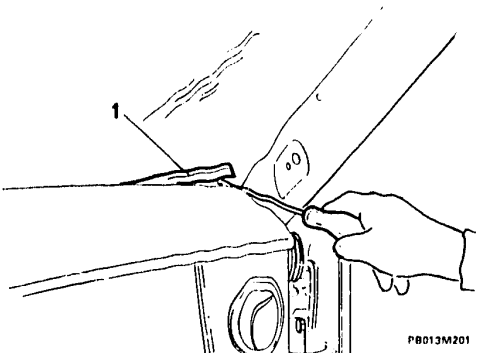

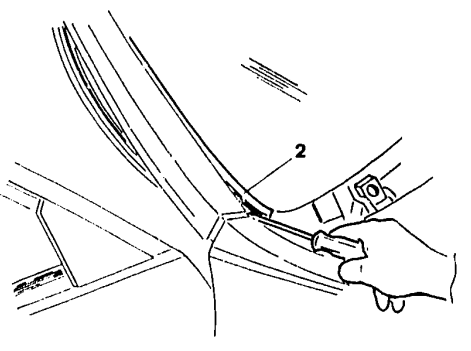

1. Draw out and remove the weatherstrip between dashboard and glass.

2. Draw out and remove the external weatherstrip between body and glass.

WINDSHIELD

REMOVAL (continued)

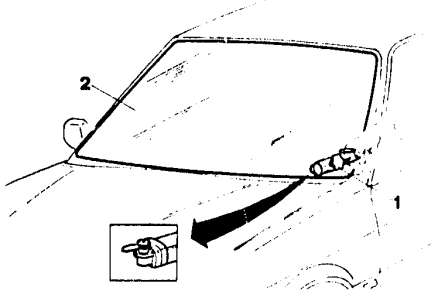

PA014M201

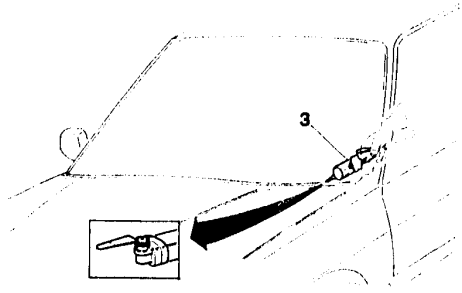

PA014M202

1. By means of a suitable cutting tool, cut the sealing compound.
2. Remove the windshield and the residual sealing compound.
3. Clean the glass seat using a scraper blade.

WINDSHIELD (continued)

INSTALLATION

Instructions for the sealing compound application.

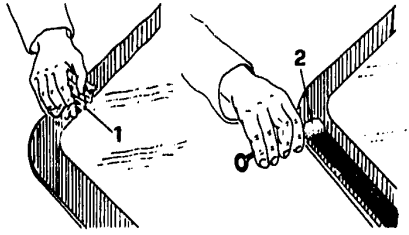

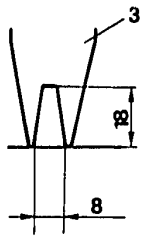

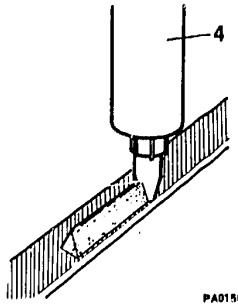

PA015M201

Use the BETASEAL sealing tool set.
Open the package just before the application and observe the utilisation rules written on the package.

1. Carefully clean the glass edge byusing the special cloth soaked with the degreasing agent included in the outfit.

NOTE: Subsequently treat the degreased part with a new dry cloth.

2. Apply the primer with a continuous action on the black silk-screen printing by using the special tool of the outfit.

After application, let the primer dry for at least 10 minutes, checking that the surface remains clean.

3. Cut the nozzle according to the indications specified in figure.
4. Apply the BETASEAL sealing compound uniformly and continuously on the glass, and observe the specified dimensions.

WINDSHIELD
INSTALLATION (continued)

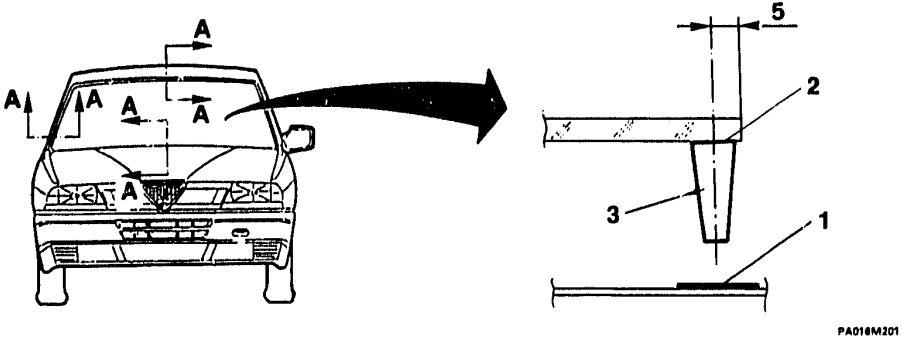

1. Apply primer for car body to the contact area with the glass.
2. Apply primer to the glass.
3. Apply the sealing compound by observing the dimensions specified in figure.

The glass must be installed on vehicle within 15 minutes after the application of the BETASEAL sealing compound.

WINDSHIELD

INSTALLATION (continued)

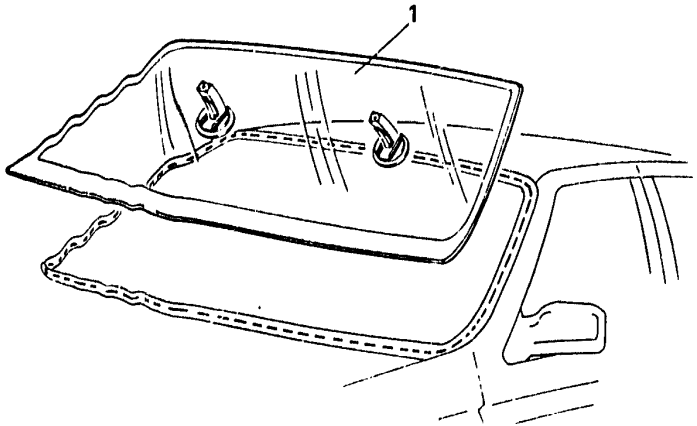

PA017M201

1. By means of suction cups, position the the windshield in its seat and apply a slight and uniform pressure along the edge.

- Install all the removed components, by proceeding in reverse order as to the removal.

REAR WINDOW

REMOVAL

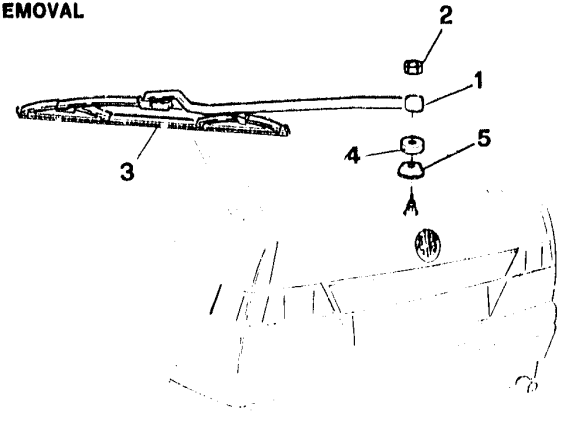

PA018M201

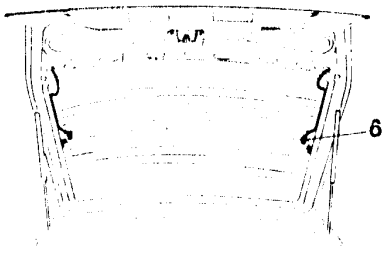

PA018M202

1. Raise the cover on the wiper arm.
2. Unscrew the nut.
3. Remove the rear windscreen wiper arm.
4. Remove the cover.
5. Remove the grommet.
6. Disconnect the two connections from the heated rear window.

- Detach the shelf cords.

REAR WINDOW
REMOVAL (continued)

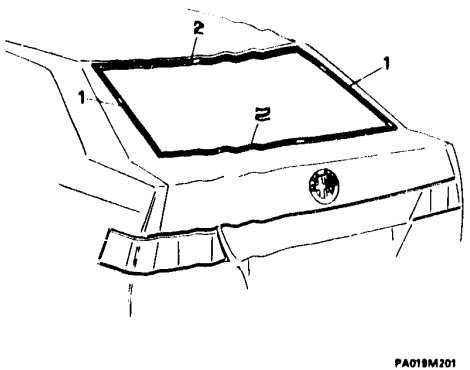

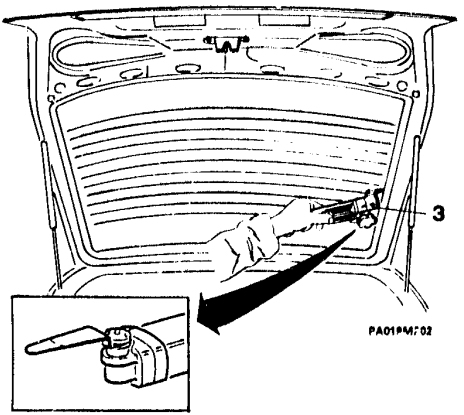

1. Remove the external side weatherstrips.
2. Remove the external upper and lower weatherstrips.
3. Remove the sealing compound along all the perimeter.
- Remove the glass.

REAR WINDOW

REMOVAL (continued)

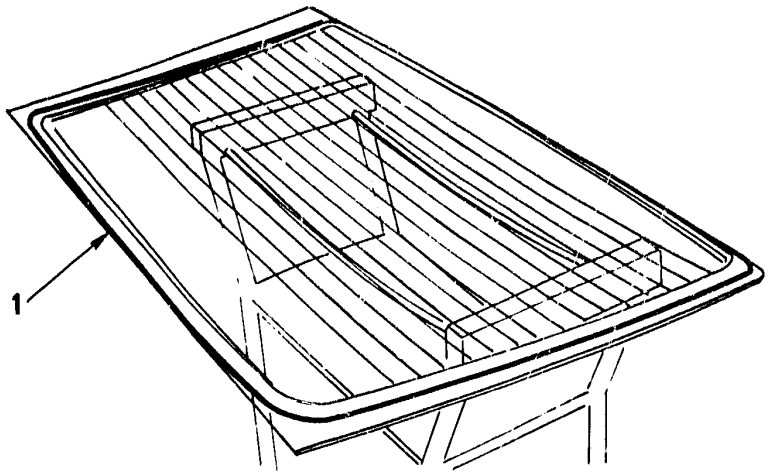

PA020M201

1. Remove the weatherstrip and the residual sealing compound.

REAR WINDOW (continued)

INSTALLATION

Instruction for the application of sealing compound.

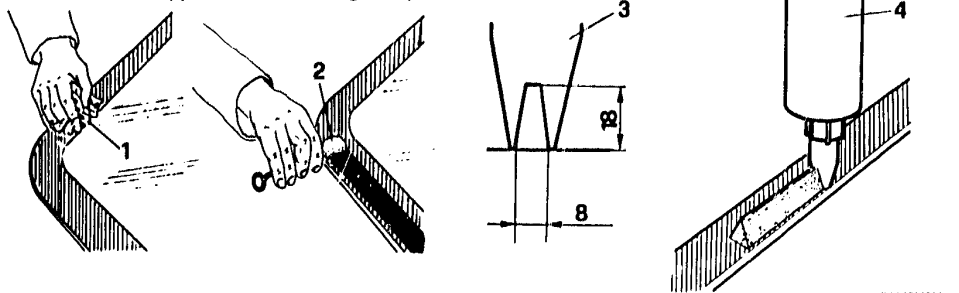

Use the BETASEAL sealing tool kit.
Open the package just before the application and obcerve the utilisation rules written on the package.

1. Carefully clean the glass edge by using a special cloth soaked with the degreasing agent included in the outfit.

NOTE: Subsequently treat the degreased area with a new dry cloth.

2. Apply the primer continuously to the black silk screen printing using the special tool of the outfit.

After the application, let the primer dry for at least 10 minutes, while keeping the surface clean.

3. Cut the nozzle according to the indications specified in figure.
4. Apply the BETASEAL sealing compound uniformly to the glass, by observing the specified dimensions.

REAR WINDOW
INSTALLATION (continued)

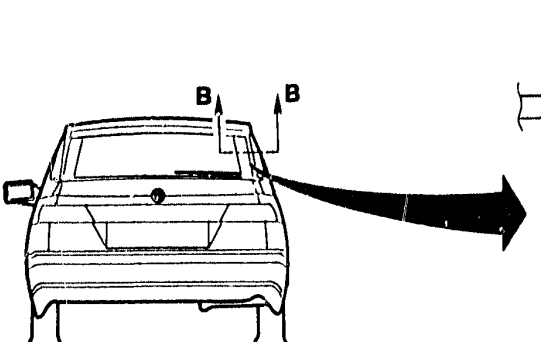

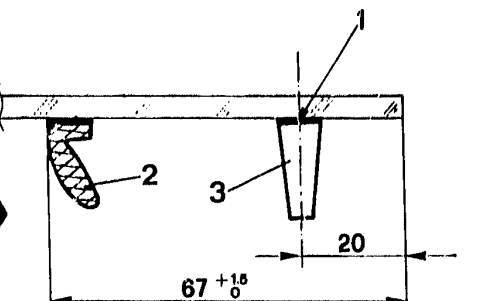

PA022M201

1. Apply the primer.
2. Position the weatherstrip by observing the dimensions specified in figure.
3. Apply the sealing compound by observing the dimensions specified in figure.

REAR WINDOW
INSTALLATION (continued)

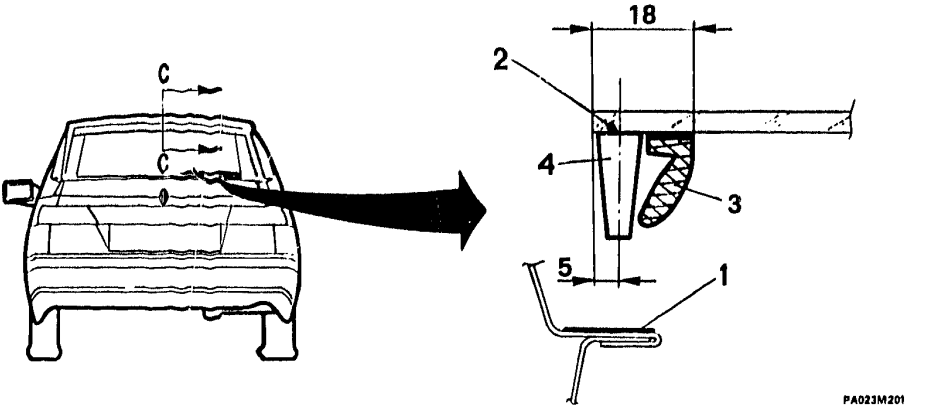

1. Apply the primer for the car body.
2. Apply the primer to the glass.
3. Position the weatherstrip by observing the dimensions specified in figure.
4. Apply the sealing compound by observing the dimensions specified in figure.

REAR WINDOW
INSTALLATION (continued)

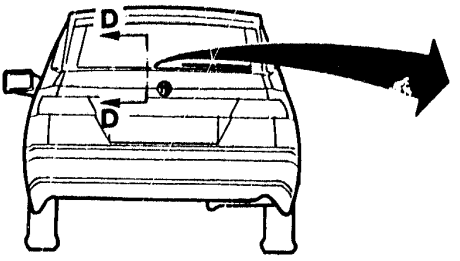

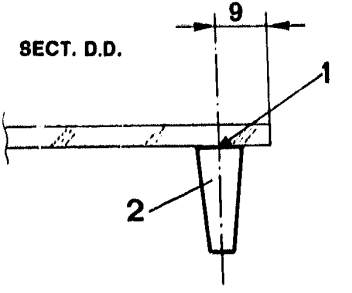

PA024M201

1. Apply the primer to the glass.
2. Apply the sealing compound by observing the dimensions specified in figure.

The glass must be absolutely installed on vehicle within 15 minutes after the application of BETASEAL sealing compound.

REAR WINDOW
INSTALLATION (continued)

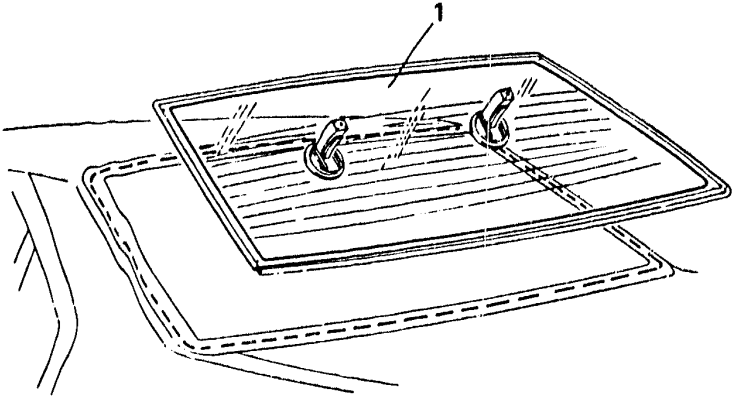

PA028M201

1. By means of suction cups, position the rear window in its seat, by applying a slight and uniform pressure along the edge.

- Install all the removed components, proceeding in reverse order as to the removal.

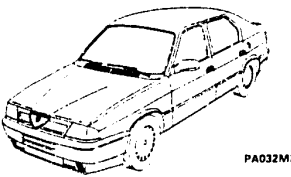
PA032M201

UNDER-DOOR SKIRT
SIDE BAND
FENDER PANEL
SUNROOF

UNDER-DOOR SKIRT
REMOVAL - INSTALLATION ..... 75 - 26

SIDE BAND
REMOVAL - INSTALLATION ..... 75 - 27

FRONT FENDER PANEL
REMOVAL - INSTALLATION ..... 75 - 28

REAR FENDER PANEL
REMOVAL - INSTALLATION ..... 75 - 30

SUNROOF
METAL PANEL ..... 75 - 31
Removal ..... 75 - 31
Disassembly - Reassembly ..... 75 - 33
Installation and Adjustment ..... 75 - 34
Adjustment ..... 75 - 34
INTERIOR TRIM ..... 75 - 35
Removal - Installation ..... 75 - 35
Disassembly - Reassembly ..... 75 - 36
SPOILER ..... 75 - 37
Removal - Installation ..... 75 - 37
Dismantling ..... 75 - 38

UNDER-DOOR SKIRT
REMOVAL - INSTALLATION

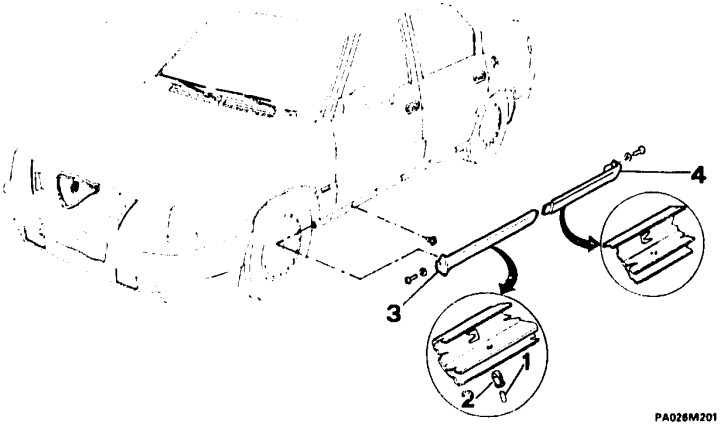

PA026M201

1. Using a punch, remove the three pins of the plastic rivets fixing the under-door skirt.
2. By means of a suitable tool, remove the three plastic rivets.

- Remove the screw fixing the skirt to the car body.

3. Carefully remove the front under-door skirt, by withdrawing it towards the front wheel.
4. Remove the rear under-door skirt in a similar way by sliding it out towards the rear wheel.

When re-assembling, pay attention to the connection between the two half-skirts.

SIDE BAND
REMOVAL - INSTALLATION

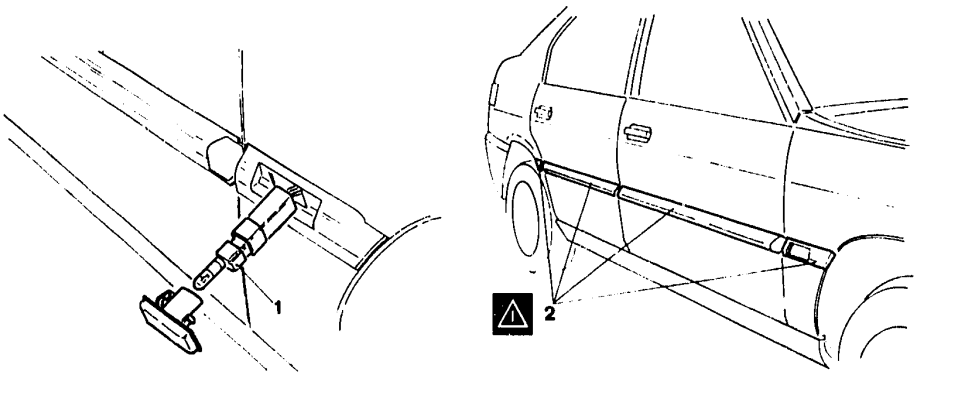

PA027M201

1. Extract the pressure-mounted indicator lights.
2. Detach the four sections composing the side band.

When re-assembling, thoroughly clean the mating surfaces.

FRONT FENDER PANEL

REMOVAL - INSTALLATION

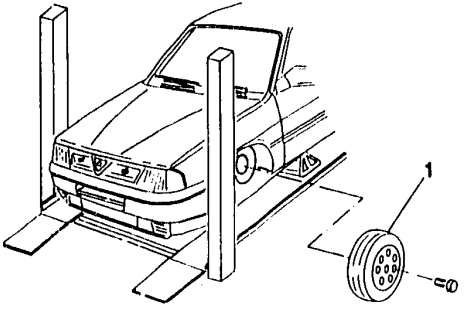

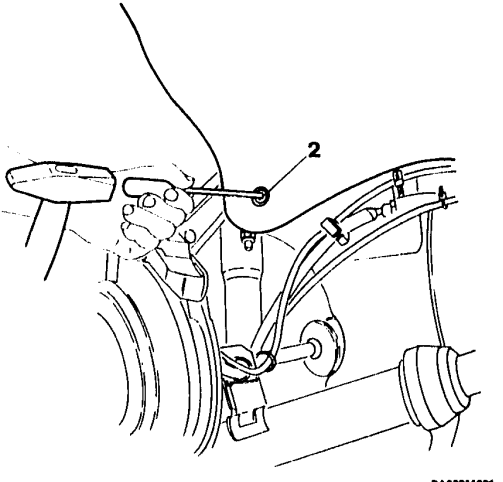

95 ÷ 10 Nm
(9.7 ÷ 10.7 Kgm)

- Place the vehicle on a lift platform and lift it.
1. Remove the wheel.
2. Using a punch, hammer on the central pins of the plastic rivets.

FRONT FENDER PANEL
REMOVAL - INSTALLATION (continued)

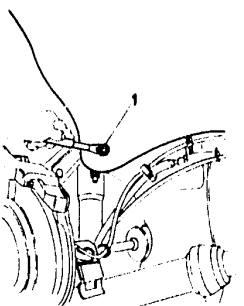

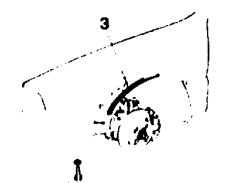

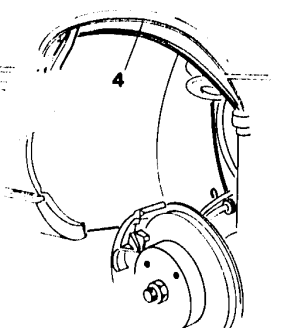

1. Remove the plastic rivets by means of a suitable tool.
2. Remove the bumper-fender panel fixing screw.
3. Extract the mudguard protecting gasket.
4. Extract the fender panel by means of a wooden wedge.

REAR FENDER PANEL
REMOVAL - INSTALLATION

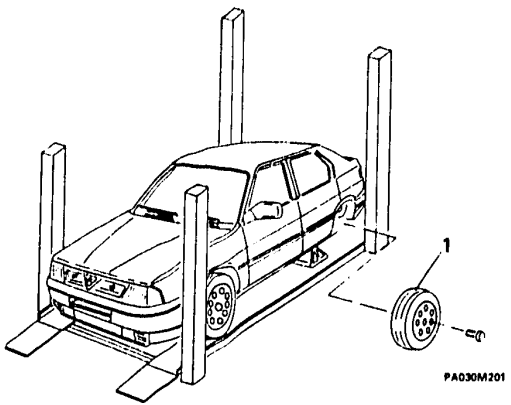

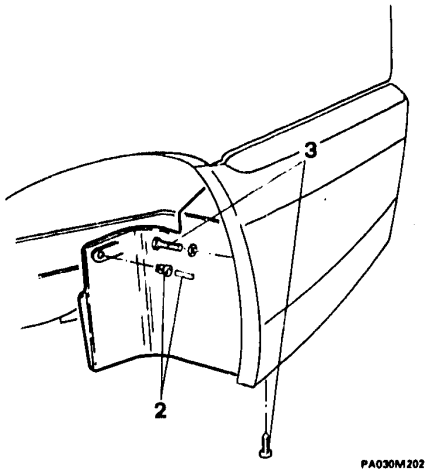

95 ÷ 105Nm
(9.7 ÷ 10.7 Km)

- Place the vehicle on a lift platform and lift it.
1. Remove the wheel.
2. Remove the fixing rivet to the car body.
3. Unscrew the two bumper fixing screws.

SUNROOF
METAL PANEL
Removal

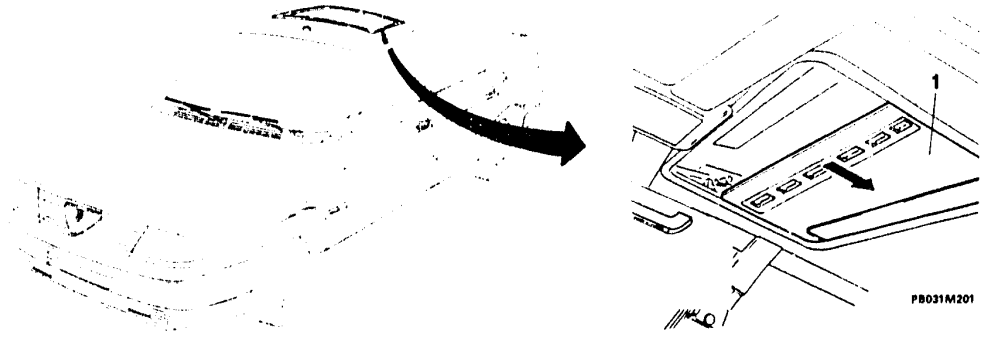

- Work with roof completely closed.

1. Slide the interior lining in by hand.

METAL PANEL
Removal (Continued)

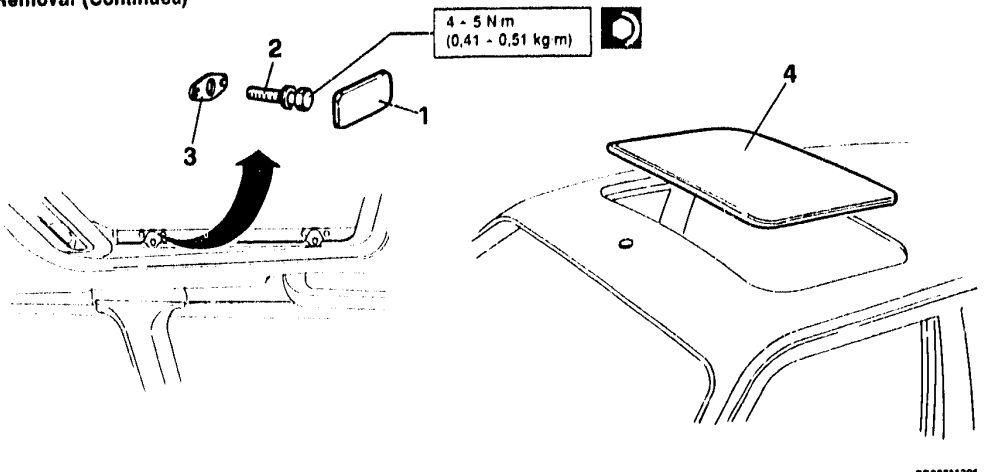

1. Remove the four protections.
2. Unscrew the four screws.
3. Retrieve the adjusting metal plates.
4. Remove the metal panel.

METAL PANEL (Continued)

Disassembly - Reassembly

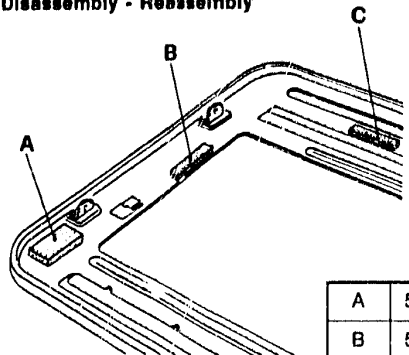

A	50 x 25 mm
B	50 x 10 mm
C	50 x 10 mm

Sealant IVI
W 8C/6
651 006
Norm. 3521-00099

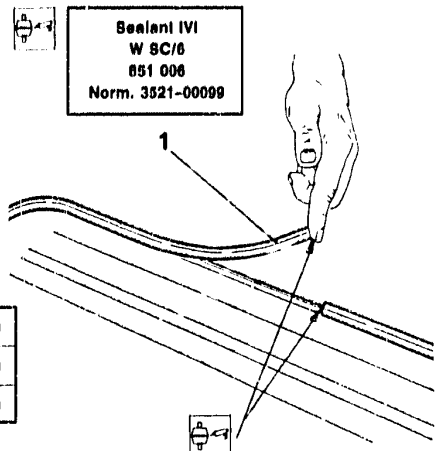

Check that the felt pads are in good order; if not, replace them to avoid troublesome vibrations which could occur while driving.

Position the new felt pads as shown in the figure.

1. If necessary, lift up one end of the weatherstrip and remove it.

The new weatherstrip, already smeared with sealant, must be fitted on the edge of the metal panel, so that the weatherstrip is half-way on the front side. Cut off the excess part and apply the specified sealant on the joint.

Installation and Adjustment

- Reassemble the sunroof panel, remembering to:
- Set the slides to the maximum opening position.
- Put the sunroof panel in position and thread in the screws without tightening them. Make sure to place the adjusting plates properly.
- Close the sunroof.
- Carry out the necessary adjustments.

Adjustment

- To adjust the sunroof panel, two technicians are required: one working from outside and the other inside the vehicle. As shown in the figure, the operator outside lines up and matches each angle of the panel with the sunroof opening, while the operator inside tightens the screws to the specified torque.
- It is necessary to open and close the sunroof a few times to let the entire assembly find its right position. Otherwise, correct the alignment of the metal panel; then carry out a further check of the system.

While aligning the sunroof panel, the operator outside must make sure it is well centred so as to avoid any pinching or rubbing of the weatherstrip against the bodywork edge.

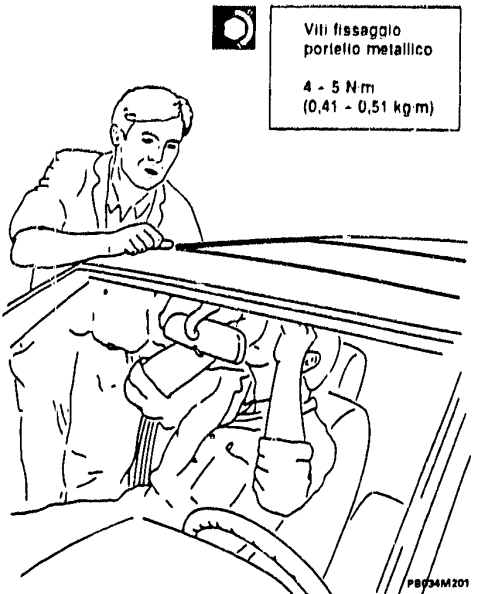

INTERIOR TRIM

Removal - Installation

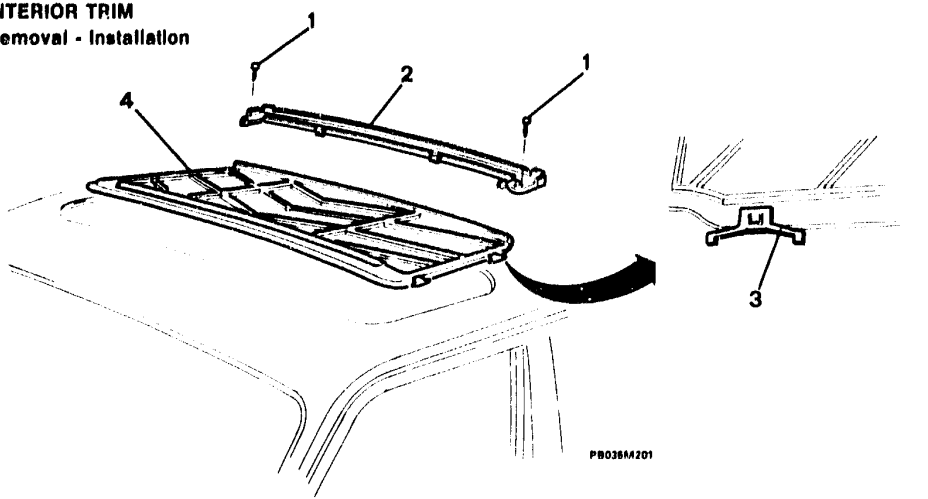

- Remove the metal panel (See 75-31).
1. Unscrew the two screws of the rear drain-off rail.
2. Remove the rail, uncoupling it from the rear hooking teeth.
3. Release the four clips, using a plastic tool.
4. Remove the interior trim, sliding it out of the upper part of the roof.

Check the state of wear of the two felt pads on the under side of the rail.

INTERIOR TRIM (Continued)
Disassembly - Reassembly

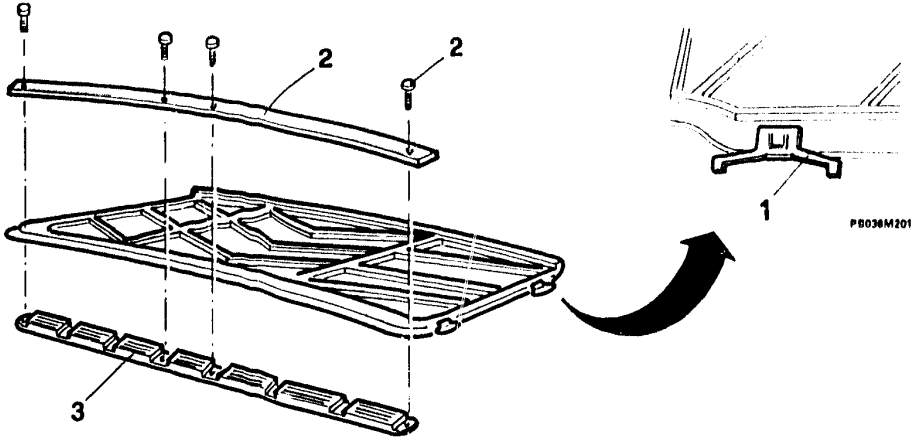

1. Release the four clips from the interior trim.
2. Unscrew the four screws of the metal strip and remove it.
3. Remove the air intake facing, releasing the hooking teeth.

SPOILER

Removal - Installation

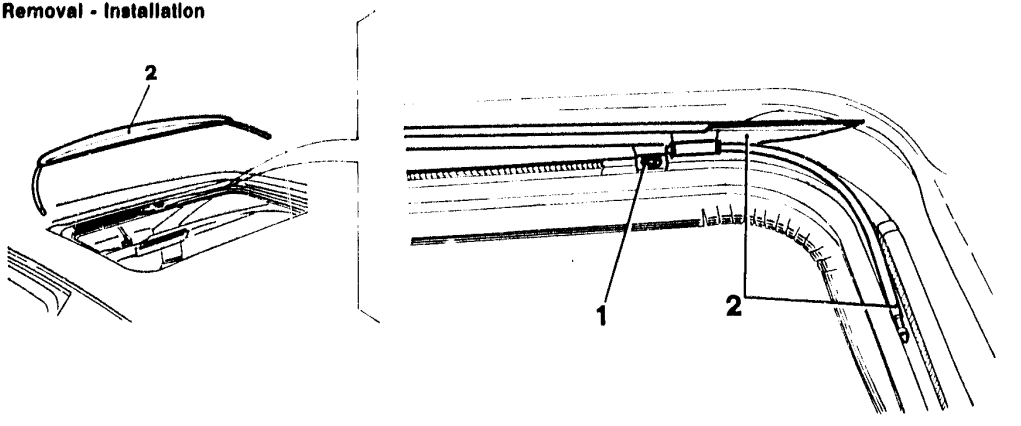

- Push sunroof right back.
1. Remove the two snap rings.
2. Remove the spoiler, sliding the two side arms out of their guides.

SPOILER (Continued)
Dismantling

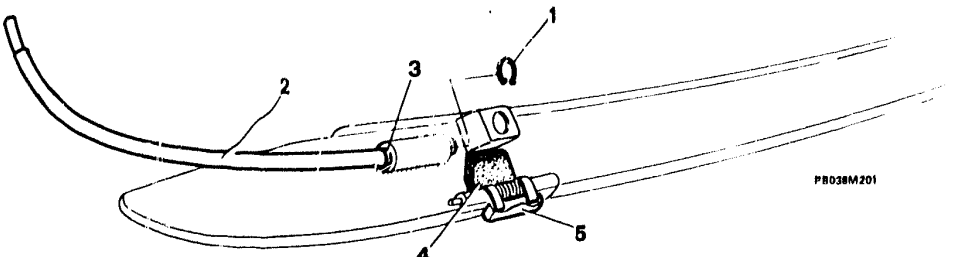

1. Remove the snap ring.
2. Remove side arm.
3. Retrieve the washer from the arm.
4. Remove the striker gasket.
5. Remove the rubber.

When reassembling, replace the gasket.

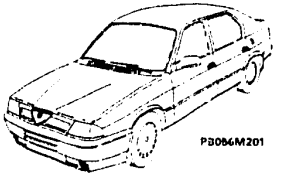

SUNROOF (cont.)

TECHNICAL SPECIFICATIONS AND NOTES

SUNROOF

COMPLETE FRAME ..... 75 - 39
Removal - Installation ..... 75 - 39
Disassembly ..... 75 - 44
Warnings on reassembly ..... 75 - 50
ROOF RAIL ..... 75 - 53
Removal - Installation ..... 75 - 53

TECHNICAL SPECIFICATIONS AND NOTES

GENERAL SPECIFICATIONS ..... 75 - 54
Sealing compounds for windscreen and rear window ..... 75 - 54
TIGHTENING TORQUES ..... 75 - 55
Sunroof ..... 75 - 55
FLUIDS AND LUBRICANTS ..... 75 - 55

SUNROOF (continued)

COMPLETE FRAME

Removal - Installation

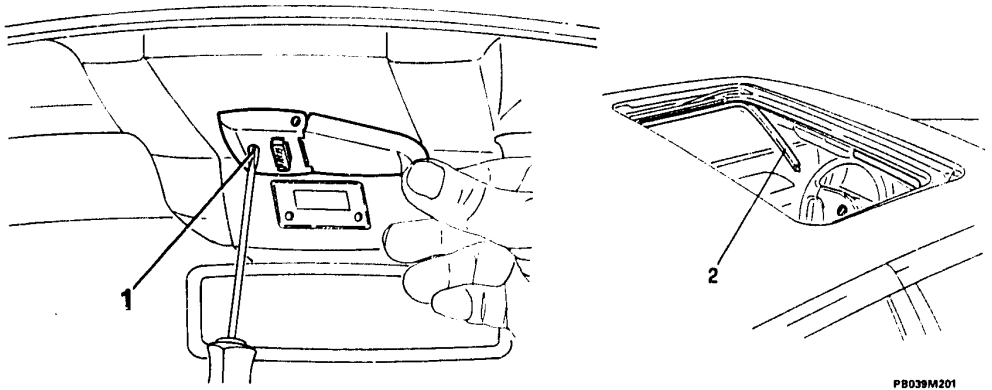

- Remove the metal panel (See 75-31).

1. Remove the sunroof handle, unscrewing the screw.
2. Remove weatherstrip between frame and interior trim.

When refitting, the weatherstrip must be fitted so that the joint is half-way along the front side.

COMPLETE FRAME

Removal - Installation (Continued)

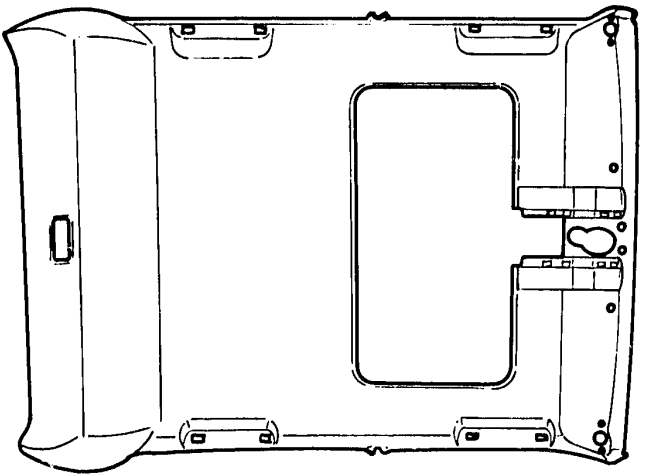

PB040M201

- Remove the roof panel (See **GR. 66**).

COMPLETE FRAME
Removal - Installation (Continued)

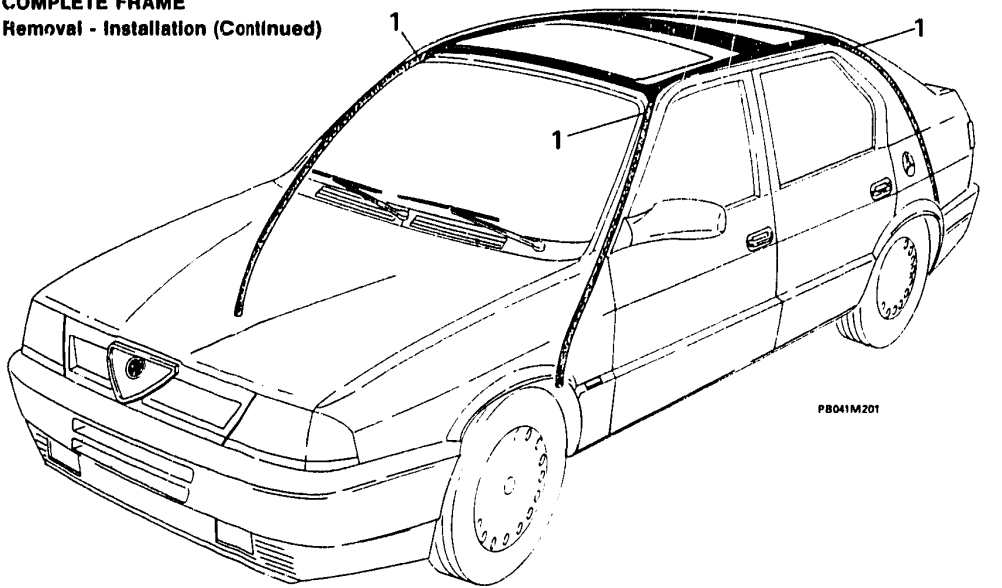

1. Disconnect the four drain-off pipes from unions on frame.

COMPLETE FRAME

Removal - Installation (Continued)

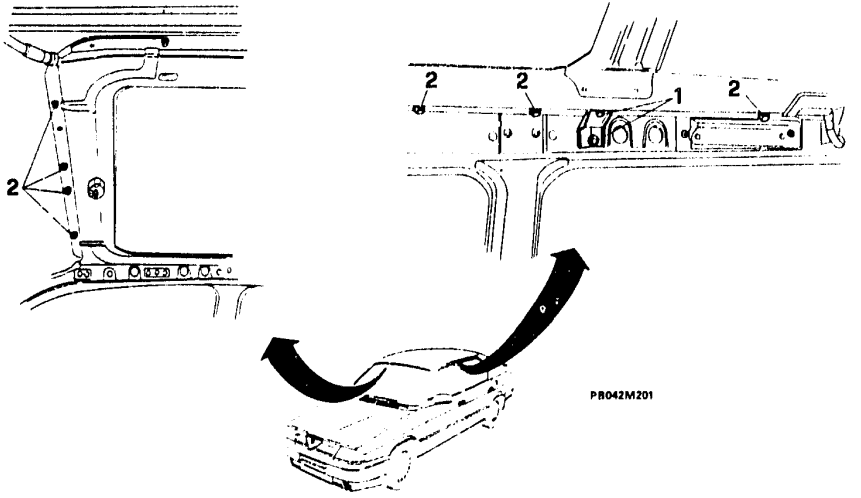

1. Unscrew the four screws (2 on each side) of the two side supports and remove supports.
2. Unscrew all the screws and remove entire frame.

COMPLETE FRAME
Removal - Installation (Continued)

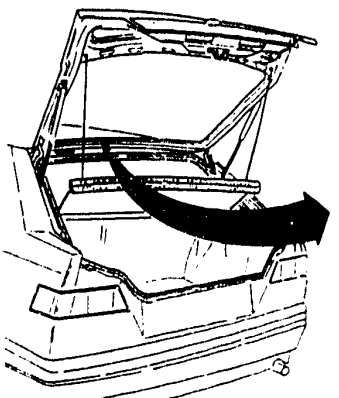

PB043M201

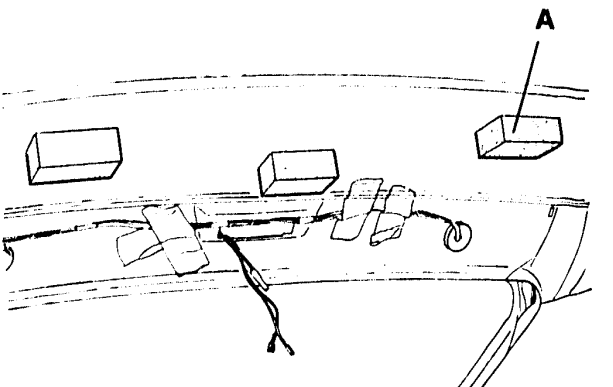

PB043M202

**Check the state of the three foam rubber roof bump pads "A"
If necessary, replace them (dimensions: A = 70x50x30 mm).**

COMPLETE FRAME (Continued)
Disassembly

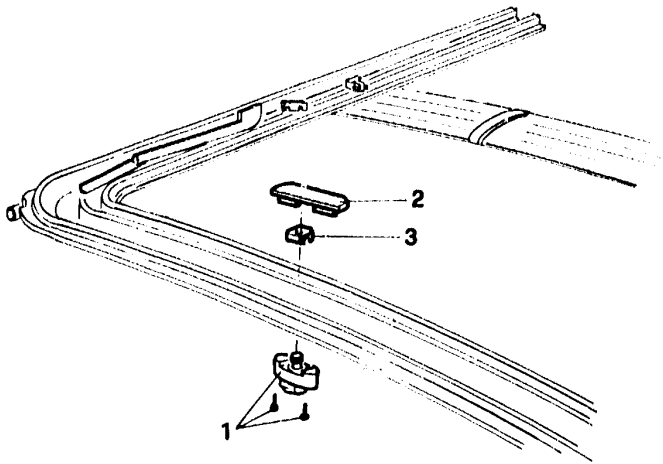

- Remove the spoiler (See 75-37).
1. Unscrew the two screws and remove opening device.
- If necessary, remove snap ring and slotted shaft.
2. Retrieve the opening device retainer support.
3. Clip off the plate.

NOTE The purpose of the metal plate is to ensure that the motor pinion teeth mate with the flexible racks.

COMPLETE FRAME
Disassembly (Continued)

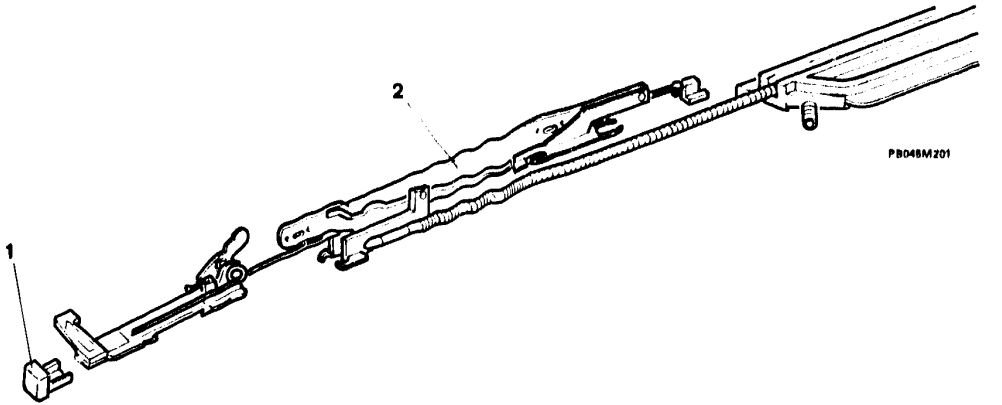

1. Remove the two rear plugs of the guides.
2. Slide out the slides completely.

When removing the slides, take the utmost care not to damage them irreparably.

COMPLETE FRAME
Disassembly (Continued)

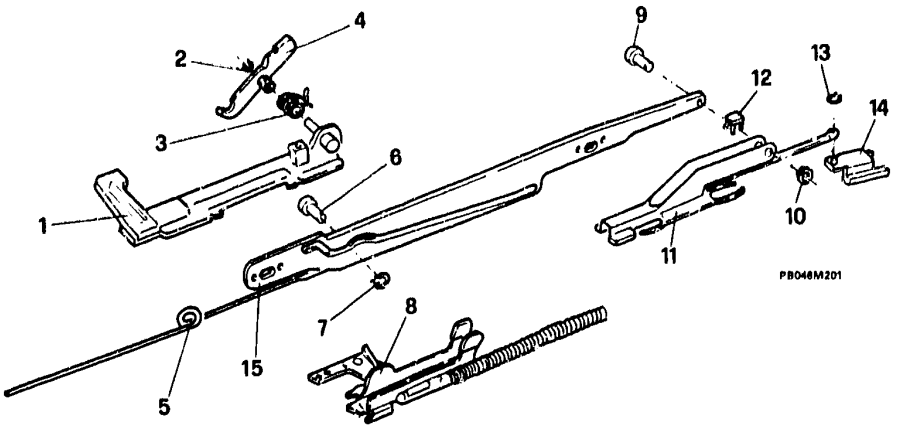

1 Rear slide
2 Snap ring
3 Spring
4 Catch
5 Spring
6 Pin
7 Snap ring
8 Central slide
9 Pin
10 Snap ring
11 Front slide
12 Retaining clip
13 Snap ring
14 Front guide shoe
15 Slide support

COMPLETE FRAME
Disassembly (Continued)

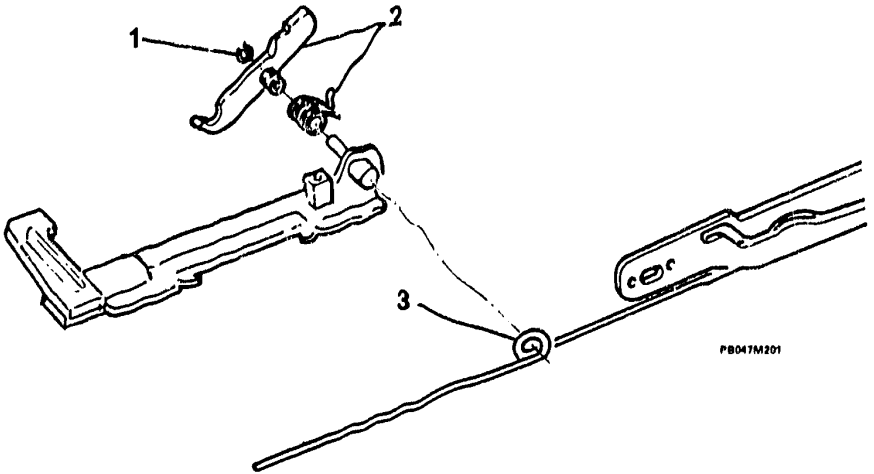

1. Remove the snap ring.
2. Slide out the catch and the spring in between.
3. Release the spring.

COMPLETE FRAME
Disassembly (Continued)

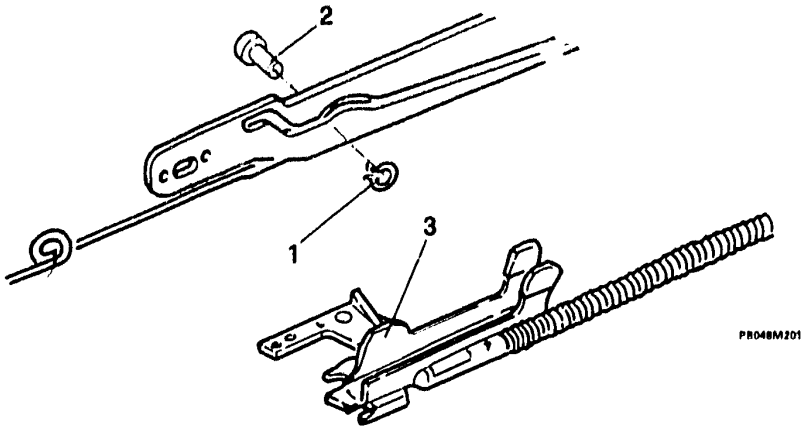

1. Remove the snap ring.
2. Slide out the pivot.
3. Remove the central slide.

COMPLETE FRAME
Disassembly (Continued)

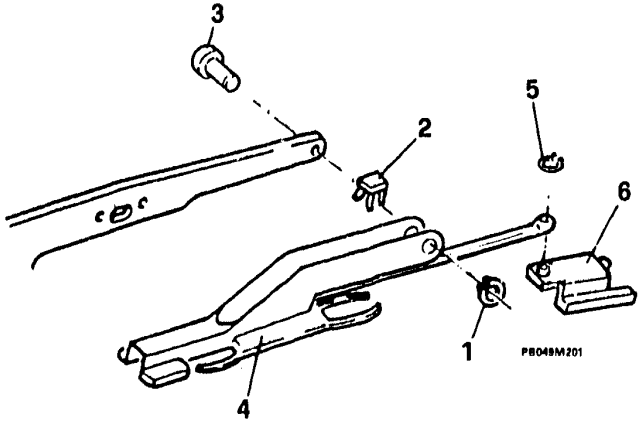

1. Remove the snap ring.
2. Unhook the retaining clip.
3. Slide out the pivot.
4. Retrieve the front slide together with the guide shoe.
5. Remove the snap ring.
6. Remove the front pad from the slide.

COMPLETE FRAME

Warnings on reassembly

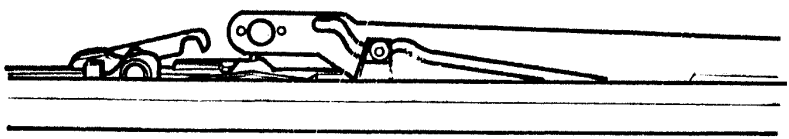

P8050M201

When refitting the opening device, it is absolutely necessary to make sure that the phasing of the roof panel opening - closing system is right. The reference position to take for setting the various components of the device is the "ROOF CLOSED" position.

Positioning of the slides

Mount the slides, setting the cam and the catch (hooking mechanism) as shown in the figure.

COMPLETE FRAME

Warnings on reassembly (Continued)

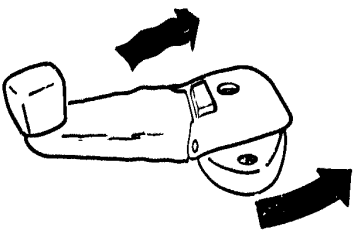

PB081M201

Phasing the opening - closing device

a. Position the handle on the device, press the button and turn the handle to end of travel.

b. Press the button again and, if the device allows you to, turn the handle in the same direction as point "a" until it reaches end of travel.

c. Press the button and turn the handle in the opposite direction with respect to point "b" until it reaches the first end of travel (corresponding to the "ROOF CLOSED" position).

⇩

COMPLETE FRAME
Warnings on reassembly (Continued)

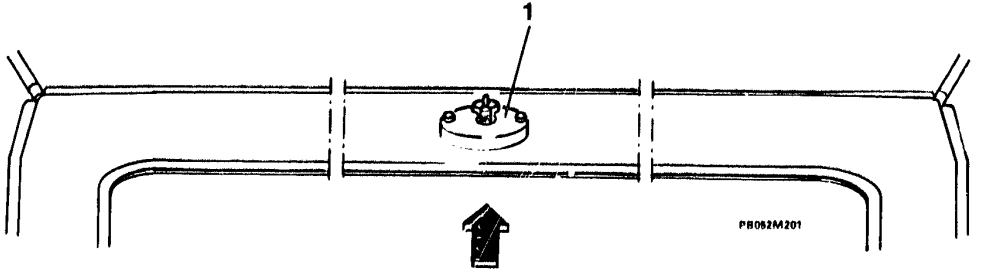

1. Mount the opening - closing device on the frame, according to the references given in the figure.

It is necessary to run the slides backwards and forwards until smooth operation of system is achieved. Then check that the two pivots are properly positioned as they were initially. Otherwise, repeat the operations of positioning the slides (See 75-50).

ROOF RAIL

Removal - Installation

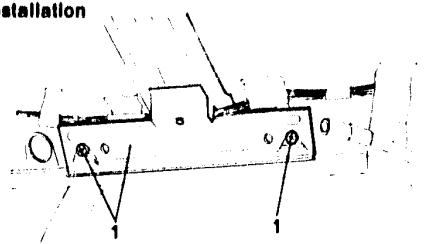

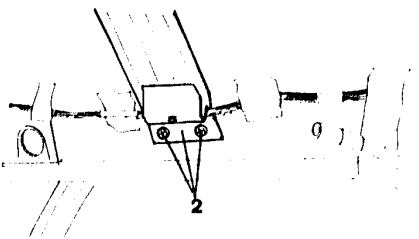



- Remove entire frame (See 75-39).

1. Unscrew the screws holding the handle anchoring brackets and remove them.
2. Unscrew the screws securing the roof rail and remove it.

TECHNICAL SPECIFICATIONS AND NOTES

GENERAL SPECIFICATIONS

Sealing compounds for windscreen and rear window.

Application	Name	Quantity
Primer for body	BETASEAL P/N. 3521 - 00106	-
Primer for windows	BETASEAL P/N. 3521 - 00107	-
Sealant	BETASEAL P/N. 3521 - 00104	-

TIGHTENING TORQUES

Sunroof

Unit of measurement: Nm (kgm)

Screws securing roof metal panel	4 to 5 (0.41 to 0.51)

FLUIDS AND LUBRICANTS

Application	Application	Application	Application
Sunroof interior trim slide guides	GREASE	**AMECO – OPTIMOL** Optimoly – Paste White T Norm. 3671–69839	–

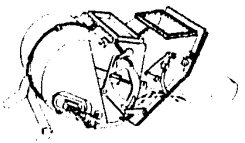

PB056N201

AIR CONDITIONING (Premodification)

AIR CONDITIONING (Premodification)

AIR FLOW DIAGRAM....80 - 1
AIR CONDITIONER CONTROLS....80 - 2
AIR CONDITIONER CONTROL SYMBOLS....80 - 3
FUNCTIONAL DIAGRAMS....80 - 4
Warm air recirculation....80 - 5
Cold air recirculation....80 - 6
Warm air from outside....80 - 7
Cold air from outside....80 - 8
Recirculation conditioned air....80 - 9

AIR FLOW DIAGRAM

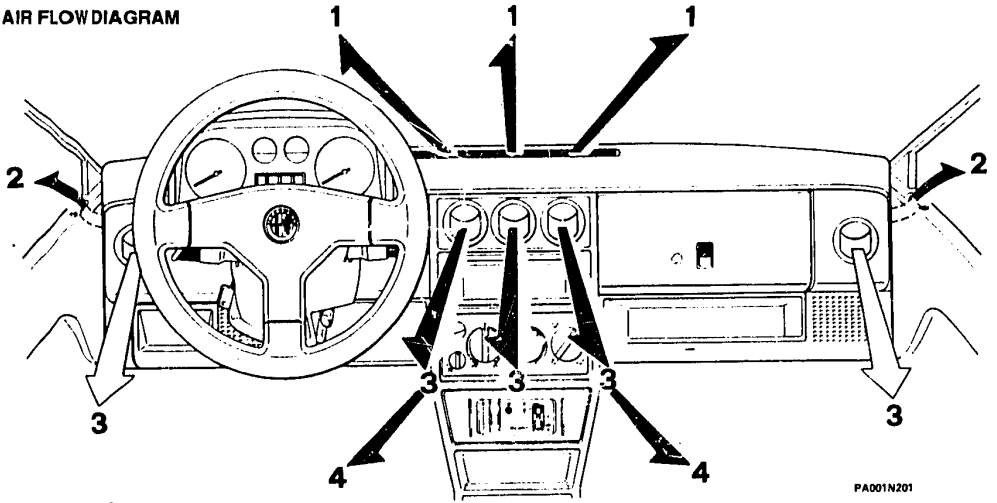

OUTSIDE AIR

CLIMATIZED AIR

1 Windshield defrosting air
2 Front door glass defrosting glass
3 Ventilation air (from air vents)
4 Floor ventilation air

AIR CONDITIONING CONTROLS

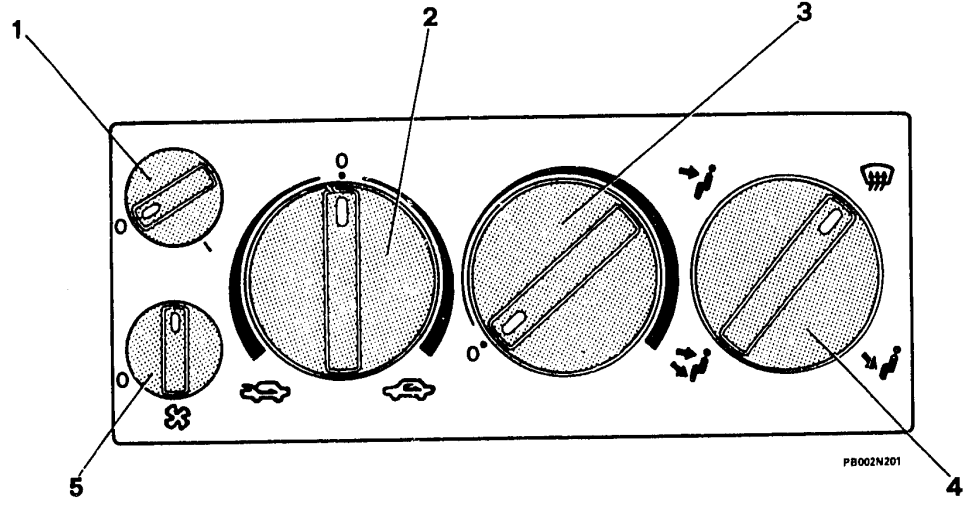

1. Conditioner control knob (where supplied)
2. External air/internal air selector
3. Air temperature selector
4. Air distribution selector
5. Electric fan control knob

AIR VENTILATION CONTROL SYMBOLS

	Electric fan speed
	External air
	Air recirculation (air taken from passenger compartment)
	Air flow mainly to floor
	Air flow to floor, windscreen and air vents on dashboard
	Air flow mainly to dashboard air vents
 PB003N201	Air flow for defrosting windscreen and side windows

FUNCTIONAL DIAGRAMS

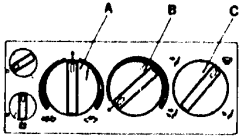

PB004N201

AIR DEFROSTING WINDSCREEN AND SIDE WINDOWS

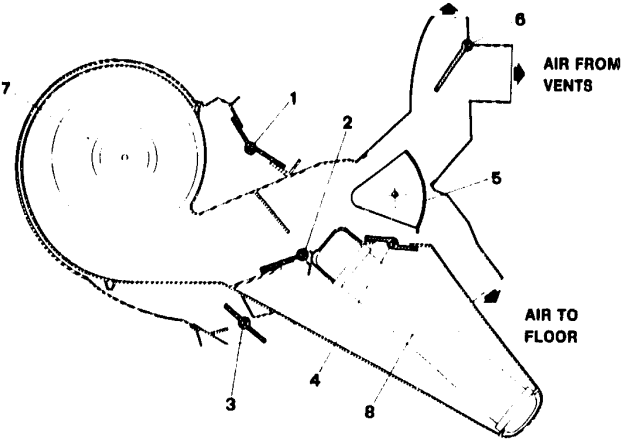

PB004N202

1. Air intake shutter (selector A).
2. Air-mix shutter (selector B).
3. Air recirculation shutter (selector A).
4. Air-mix shutter (selector B).
5. Air distribution shutter (selector C).
6. Air distribution shutter (selector C).
7. Electric fan.
8. Heater.

FUNCTIONAL DIAGRAMS (Continued)

Warm air recirculation (for example, with distribution selector set at)

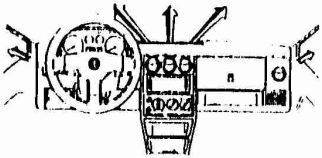

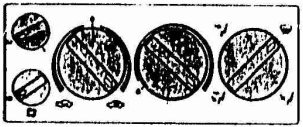

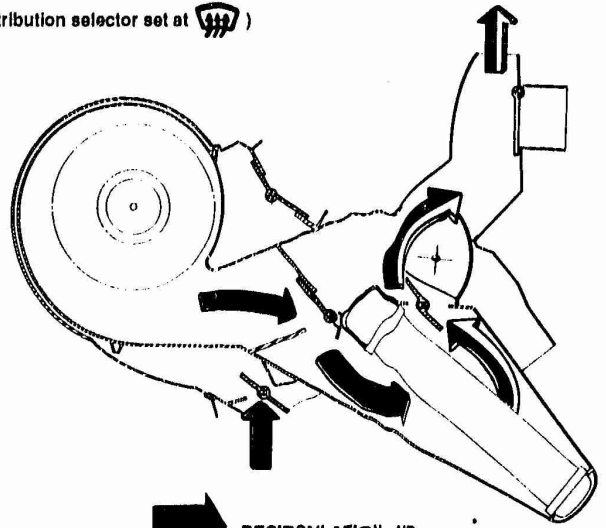

- To increase the air flow, operate the electric fan knob.
- To obtain intermediate temperature, operate air temperature selector knob.

RECIRCULATION AIR

PB006N201

HEATED AIR

PB005N202

FUNCTIONAL DIAGRAM (Continued)

Cool air recirculation (for example, with air distribution selector at)

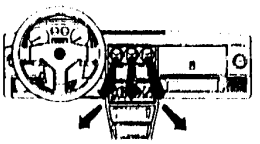



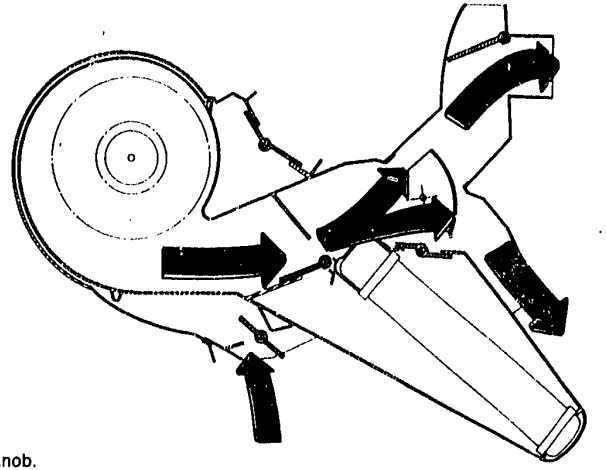

PB006N201

- To increase air flow, operate electric fan knob.
- To obtain intermediate temperature, operate air temperature selector knob.

RECIRCULATION AIR

PB006N202

FUNCTIONAL DIAGRAMS (Continued)

Warm air from outside (for example, with selector at)

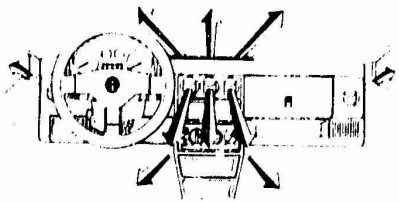



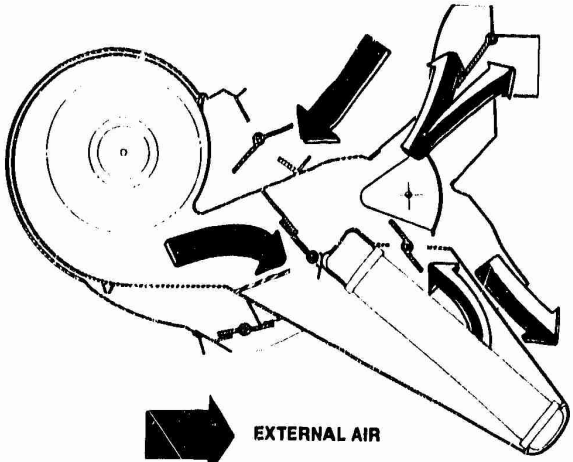

PN007N201

PB006N202

- To increase air flow, operate electric fan knob.
- To obtain intermediate temperature, operate air temperature selector knob.

FUNCTIONAL DIAGRAMS (Continued)

Cool air from outside (for example, with selector at)

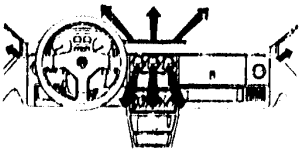

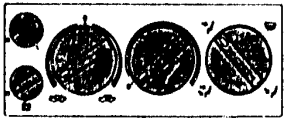

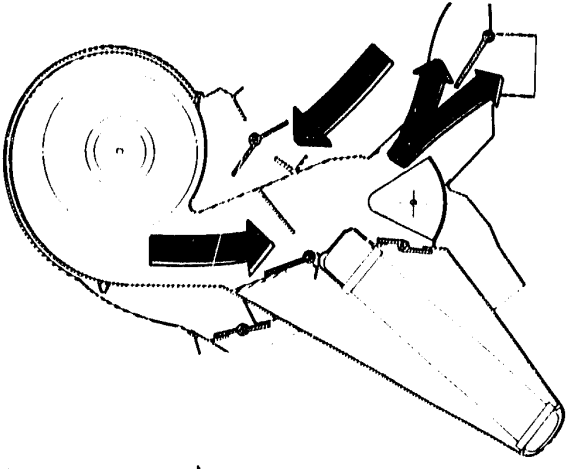

PB008N201

- To increase air flow, operate electric fan knob.
- To obtain intermediate temperature, operate on air temperature selector knob.

EXTERNAL AIR

PB008N202

FUNCTIONAL DIAGRAMS (Continued)
Conditioned recirculation air (for example, with selector at)

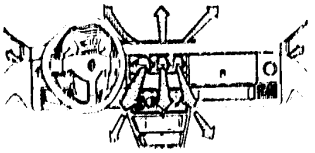

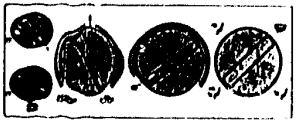

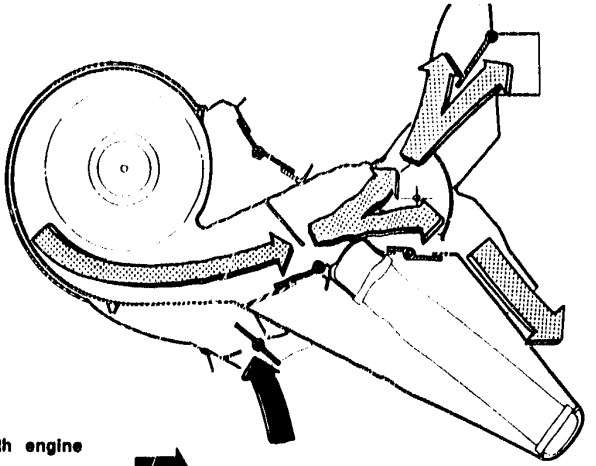

The conditioner can work only with engine started and electric fan on.

- To vary the air conditioning temperature, operate knob of potentiometer.

RECIRCULATION AIR

CONDITIONED AIR

PB010N201

PB008N202

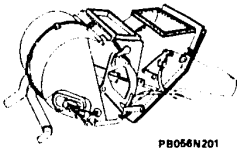

PB056N201

HEATER (Premodification)

HEATER (Premodification)

ASSY..... 80 - 10
REMOVAL - INSTALLATION ..... 80 - 11
DISASSEMBLY - ASSEMBLY..... 80 - 15

HEATER

ASSY

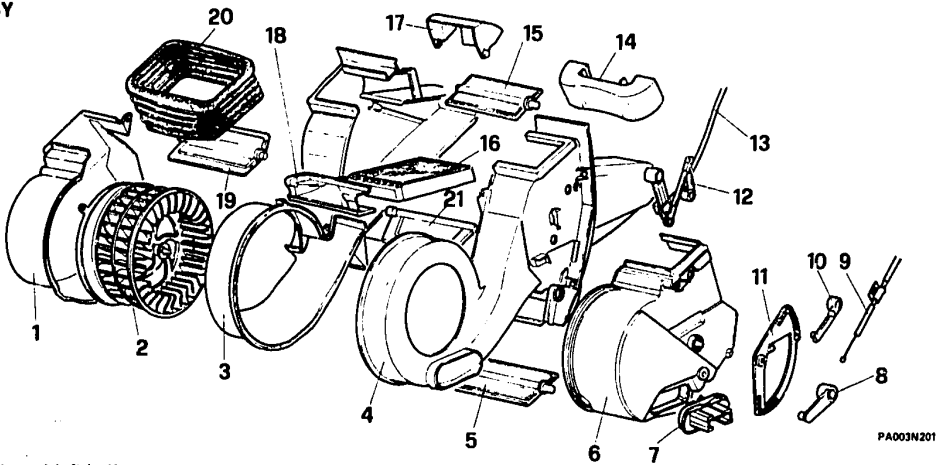

1 External left half-cover
2 Electric fan
3 Internal left half-cover
4 Internal right half-cover
5 Air recycling flap
6 External right half-cover
7 Resistor
8 Lever
9 Flap opening-closing control cable
10 Lever
11 Flap closing-opening device
12 Lever
13 Flap opening-closing control cable
14 Air outlet
15 Air intake flap
16 Radiator
17 Foot ventilation flap
18 Cover
19 Air mixture flap
20 Air intake duct
21 Air mixture flap

HEATER (continued)

REMOVAL - INSTALLATION

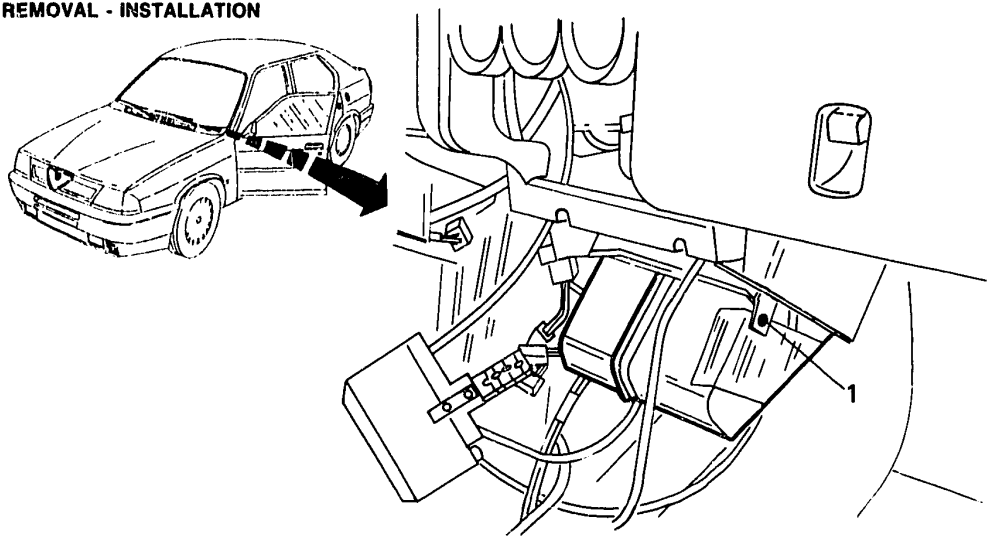

- Remove the central console (see **GR. 66**).

1. Remove the screws fixing the foot ventilation air duct.

HEATER

REMOVAL - INSTALLATION (continued)

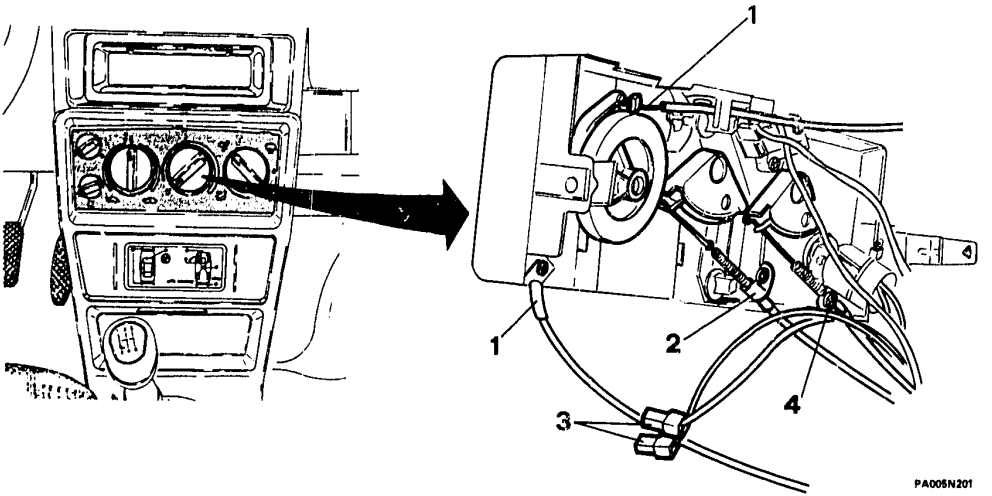

- Set the switches to the closed position.
1. Disconnect the air flow distributor cable.
2. Disconnect the hot air control cable.
3. Disconnect the control illumination connectors.
4. Disconnect the air recycling control cable.

HEATER

REMOVAL - INSTALLATION (Continued)

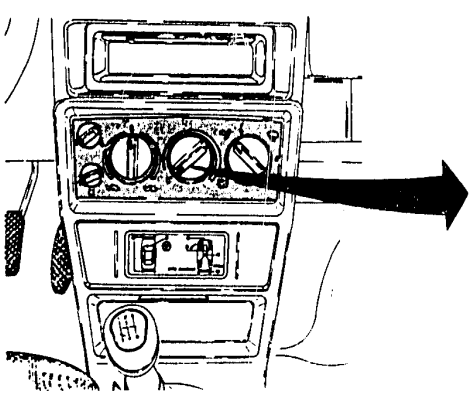

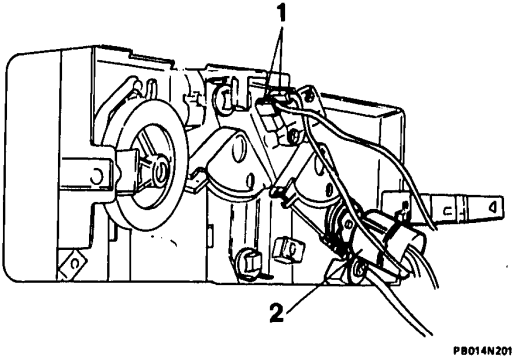

1. Disconnect the microswitch connectors.

2. Disconnect the electric fan speed control connector and remove the control unit.
   - In the case of vehicles with conditioner, disconnect the connectors from relay and potentiometer.



HEATER

REMOVAL - INSTALLATION (continued)

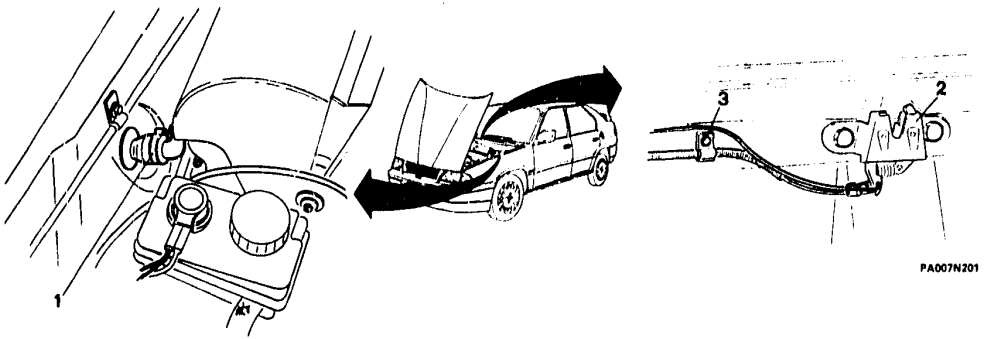

1. Unloose the clamps and disconnect the two water pipes, after throttling them by means of two clamps.
2. Unscrew the nuts fixing the closing device.
3. Unscrew the nut fixing the opening cable supporting bracket.

- By operating inside the vehicle, unscrew the heater fixing screws.
- Remove the heater.

HEATER (continued)

DISASSEMBLY - ASSEMBLY

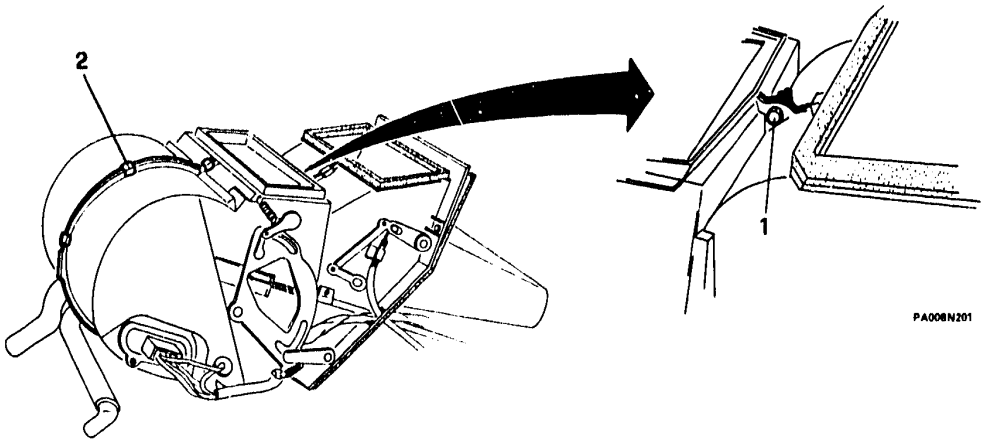

1. Unscrew the fixing nut and screw.

2. Release the fixing clips of the external rifght half-cover and remove it.

HEATER

DISASSEMBLY - ASSEMBLY (continued)

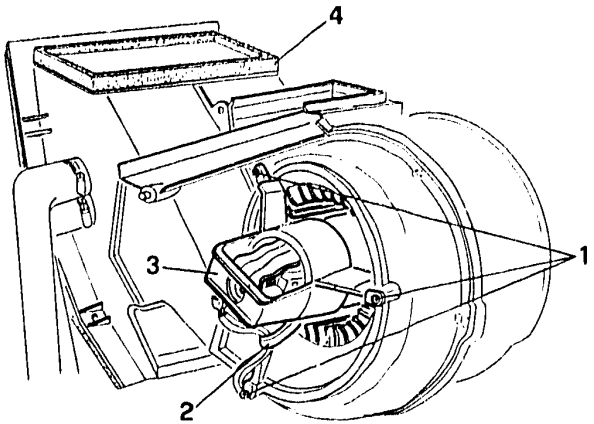

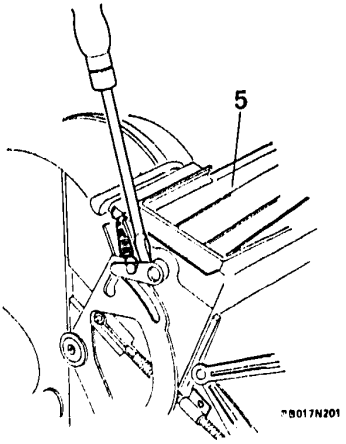

1. Unscrew the electric fan fixing screws.
2. Remove the clamp.
3. Withdraw the electric fan.
4. Remove the outside air intake duct.
5. Remove the complete air intake flap (pressure-mounted).

HEATER

DISASSEMBLY - ASSEMBLY (continued)

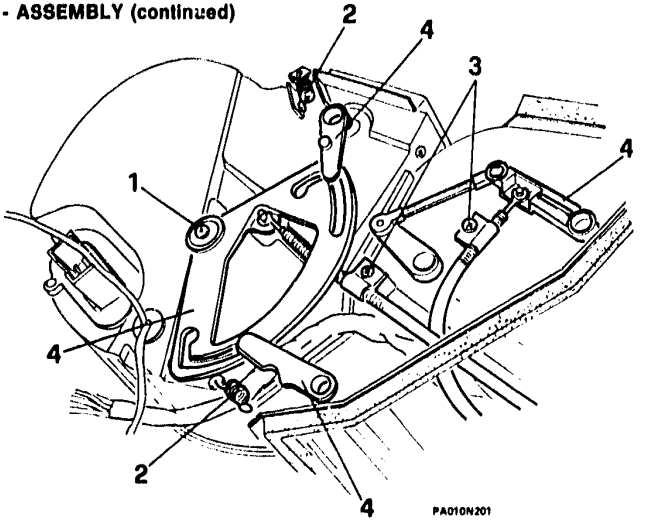

- Remove the 11 fixing clips.
- Disconnect the wiring.

1. Unscrew the fulcrum screw.
2. Release the springs.
3. Release the cable holding bracket and remove the cables.
4. Remove the control mechanism.

- Remove the half-cover.

HEATER

DISASSEMBLY - ASSEMBLY (continued)

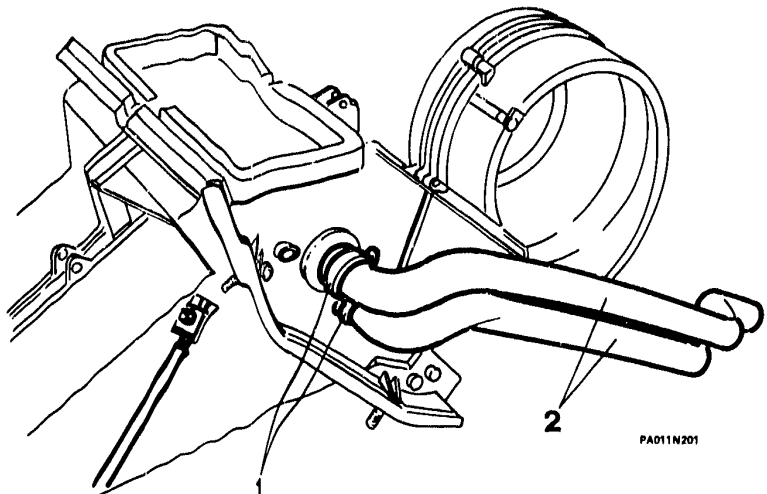

1. Unloose the two hose clamps.
2. Disconnect the water inlet and outlet hoses from the radiator.

- Release the volute fixing clips and open the volute.
- Remove the internal components.

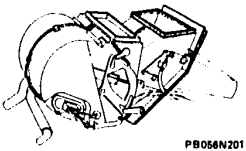
PB056N201

CONDITIONER (Premodification)

CONDITIONER (Premodification)

INSTALLATION DIAGRAM ..... 80 - 19
DESCRIPTION ..... 80 - 20
GENERAL WARNING FOR
MAINTENANCE OPERATIONS ..... 80 - 25
COMPRESSOR ..... 80 - 26
Description ..... 80 - 26
Removal - Installation ..... 80 - 27
CONDENSERS - ELECTRIC FANS ..... 80 - 31
Description ..... 80 - 31
Removal - Installation ..... 80 - 32
Disassembly ..... 80 - 35

CONDITIONER
INSTALLATION DIAGRAM

1. Compressor.
2. Condenser.
3. Dehydrating filter.
4. Trinary pressure switch.
5. Needle valve for discharge/recharge on low-pressure pipe.
6. Needle valve for discharge/recharge on high-pressure pipe.
7. Expansion valve.
8. Evaporator unit.
9. Temperature sensor (antifrost).

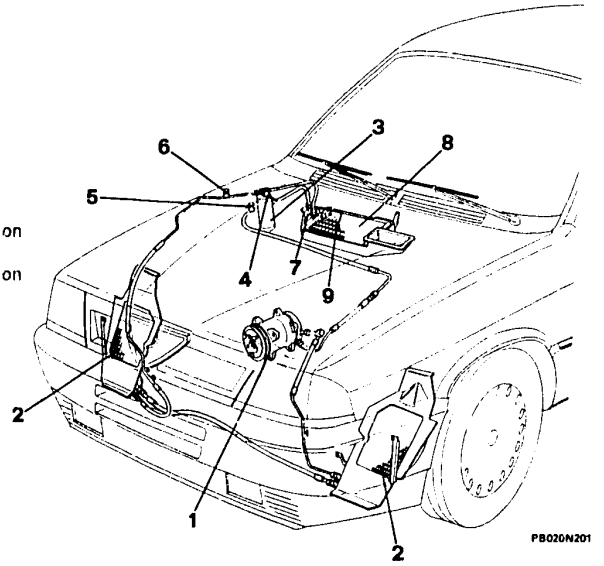

CONDITIONER (Continued)

DESCRIPTION

The air conditioning system has the dual function of cooling and drying the passenger compartment air.

- Operation is by means of a normal cooling cycle using Freon fluid (R12), whereby the phase conversion from liquid to gas and vice versa enables heat to be absorbed or released in considerable quantities.
- Freon 12 has been chosen for its characteristics: it is not toxic, not inflammable, not explosive and not corrosive for the metals with which it comes into contact, and is odourless.
- During operation, two pressure levels are sustained: on the one hand by the compressor 5 and on the other by the expansion valve 12 where the refrigerant enters the evaporator 1.

HIGH PRESSURE FLUID (GAS PHASE)

FLUID (LIQUID PHASE)

LOW PRESSURE FLUID (GAS PHASE)

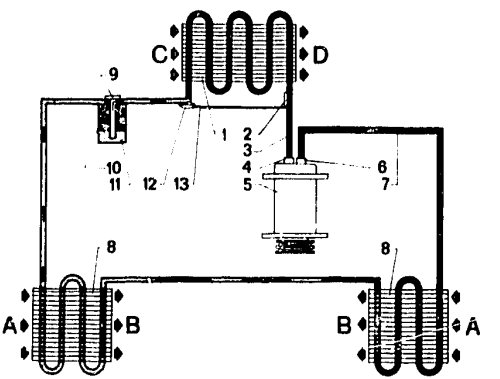

PB021N201

A - external air
B - warm air
C - passenger compartment air
D - cold and dehydrated air

CONDITIONER
DESCRIPTION (Continued)

- Refrigerant leaves the compressor 5 in the form of a high pressure, high temperature gas (temperature: approx. **80 to 100°C**;pressure: **10 to 18 bar**).
  Refrigerant enters condensers 8 where it undergoes refrigeration, aided by the electric fan and the ram air, and then exits in a liquified form at a temperature of approx. **40°C to 50°C**.
  From here it is fed through the dehydrating filter 10, which filters and above all dries out the refrigerant, so preventing it, later in its cycle, from freezing and clogging the expansion valve, with a consequent reduction or complete loss of efficiency of the cooling system.

HIGH PRESSURE FLUID (GAS PHASE)

FLUID (LIQUID PHASE)

LOW PRESSURE FLUID (GAS PHASE)

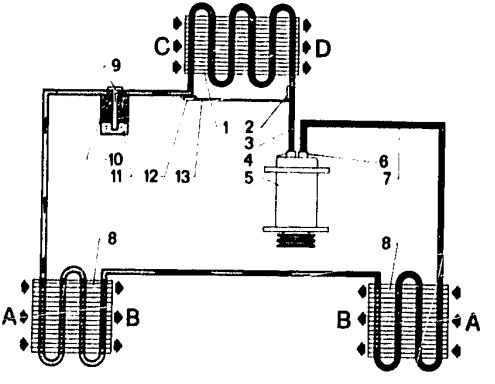

PB021N201

A - external air
B - warm air
C - passenger compartment air
D - cold and dehydrated air

CONDITIONER
DESCRIPTION (Continued)

- The expansion valve 12, located at the entrance to the evaporator, atomizes the fluid and thereby lowers both its pressure and temperature.
  The fluid then enters the evaporator 1 where it is vaporized and thus absorbs heat from the air which is directed onto the fins of the heat exchanger by a centrifugal fan before entering the passenger compartment.
  Moreover, upon contact with the cold walls of the evaporator, the air loses much of its moisture which, condensing, is drained off the vehicle externally via the condensate line.
  The refrigerant then leaves the evaporator in the form of a gas and is drawn into the compressor, and the cycle is renewed.

HIGH PRESSURE FLUID (GAS PHASE)
FLUID (LIQUID PHASE)
LOW PRESSURE FLUID (GAS PHASE)

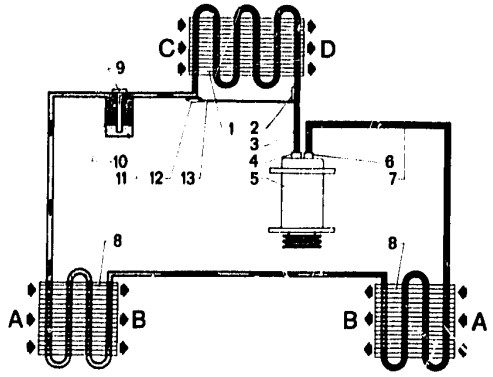

PB021N201

A - external air
B - warm air
C - passenger compartment air
D - cold and dehydrated air

CONDITIONER
DESCRIPTION (Continued)

- Correct operation of the system is controled by a Trinary pressure switch located near the driver filter.
  The pressure switch carries out the following functions:
- Deactivates the electromagnetic coupling of the compressor in the event of a fall in pressure following system loss (that is, it functions as a minimum pressure switch).
- Deactivates the electromagnetic coupling of the compressor in the event of an anomalous increase in pressure following malfunction of one of the components of the system (that is it functions as a peak pressure switch).
- Activates the electric fan of the right condenser when the pressure at the drier filter reaches the value of **15 to 17 bars** (the electric fan stops when the pressure is reduced by **3 to 4 bars**).
  The electric fan of the left condenser is however always activated during the operation of the compressor.

HIGH PRESSURE FLUID (GAS PHASE)

FLUID (LIQUID PHASE)

LOW PRESSURE FLUID (GAS PHASE)

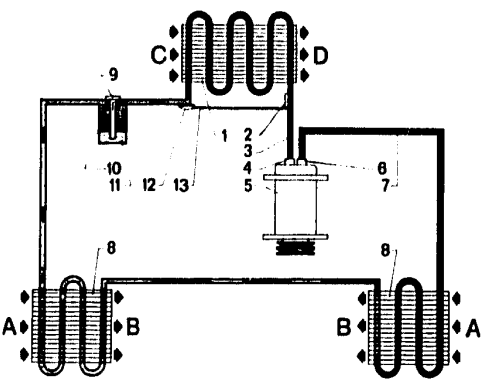

P8021N201

A - external air
B - warm air
C - passenger compartment air
D - cold and dehydrated air

CONDITIONER
DESCRIPTION (Continued)

- During engine starting, a relay prevents the compressor electromagnetic coupling from engaging, to prevent strain on the starting motor.
- A special device increases the engine idle r.p.m. when the compressor turns on.
- The system is governed by two devices located inside the vehicle
- A 4-position switch allows electric fan operation at 4 different speeds.
- A thermostat allows the evaporator unit temperature to be regulated so as to maintain the passenger compartment conditions as required.
- The compressor can be operated only when the electric fan motor is switched on.

HIGH PRESSURE FLUID (GAS PHASE)

FLUID (LIQUID PHASE)

LOW PRESSURE FLUID (GAS PHASE)

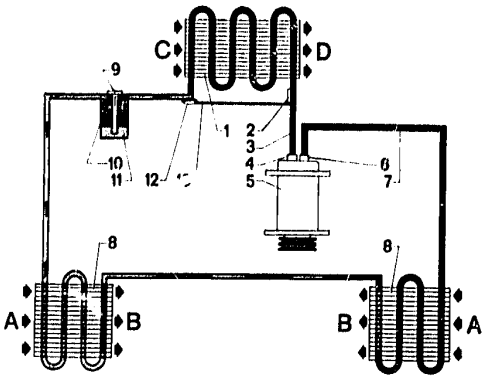

PB021N201

A - external air
B - warm air
C - passenger compartment air
D - cold and dehydrated air

CONDIZIONER (Continued)

GENERAL WARNINGS FOR MAINTENANCE OPERATIONS

- Before carrying out any maintenance operations, always disconnect the negative battery terminal.
- Before disassembling the system, always drain off the refrigerant.
- During maintenance operations, when the components of the refrigerant system are disconnected, plug the unions to prevent moisture or impurities entering the system.
- When remounting the pipe unions, replace the O-rings.
- Lubricate the threads of the pipe unions, using the specified antifreeze oil (SUN OIL COMPANY - Sunlso 46) and tighten the unions to the specified torque.

CONDITIONER (Continued)

COMPRESSOR

Description

The function of the compressor is to suck in and compress refrigorant leaving the evaporator to send into the high prossure line of the system.

The rotating parts of the compressor are lubricated with special oil put in at assembly.

During operation, some of this oil (approx. **30%**) spreads throughout the system.Consequently, when re-filling, supply the compressor with only **70%** of the total amount necessary for complete replenishing .

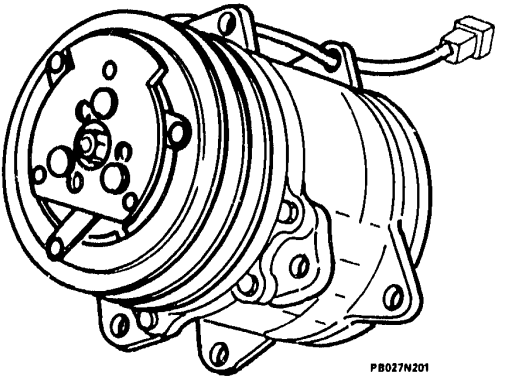

PB027N201

COMPRESSOR (Continued)
Removal - Installation

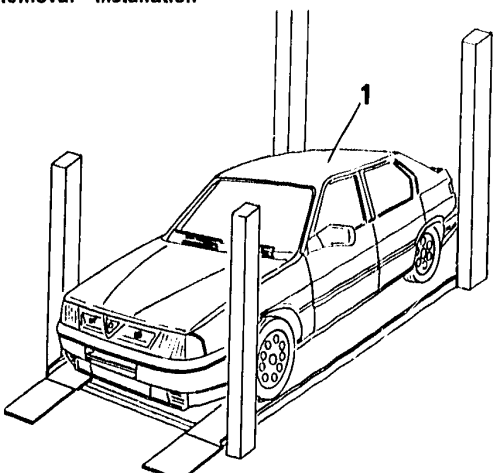

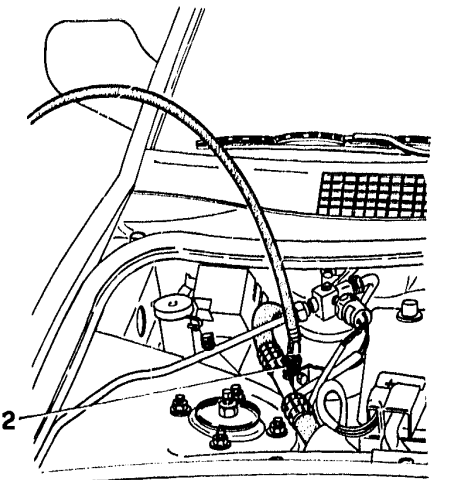

PB028N201

1. Set vehicle on lift.
- Disconnect negative battery terminal.
- Remove the bonnet (See **GR. 56**).

2. Drain off the Freon fluid from the low pressure valve by connecting a suitable pipe to the valve (see **80-49**).



COMPRESSOR
Removal - Installation (Continued)

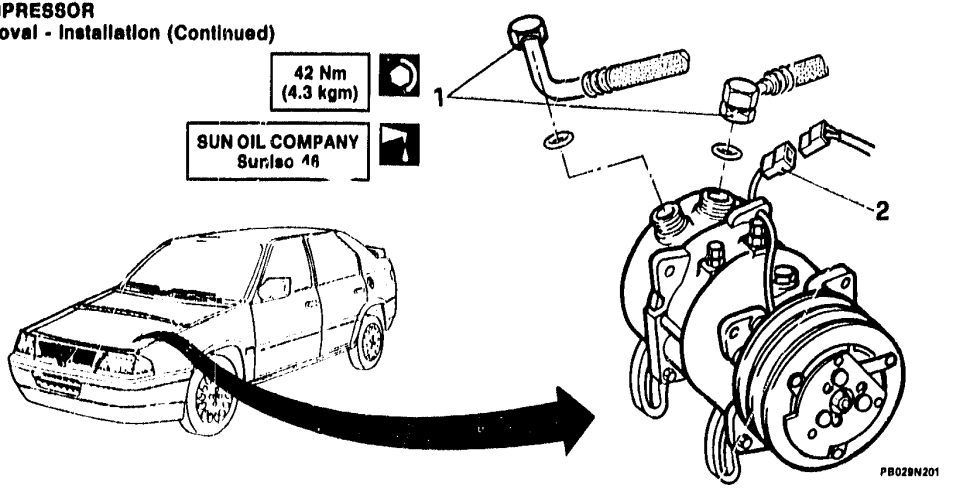

1. Disconnect the Freon intake and delivery pipes from the compressor.
2. Disconnect the power supply lead connector of the electromagnetic coupling.

Replace O-rings when refitting unions.

COMPRESSOR
Removal - Installation (Continued)

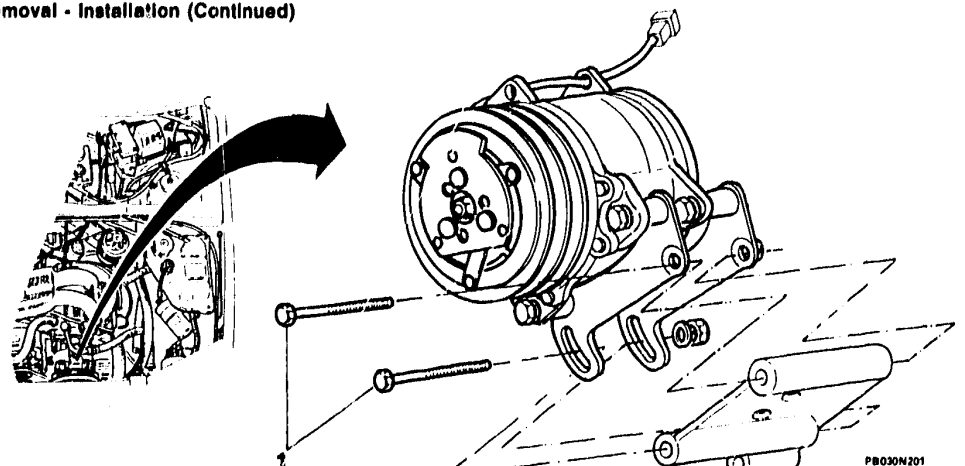

1. Slacken off the compressor screw and bolt.
- Disconnect the compressor drive belt.
- Unscrew the bolts completely, slide them out and remove the compressor together with its supporting brackets.

⇩

COMPRESSOR
Removal - Installation (Continued)

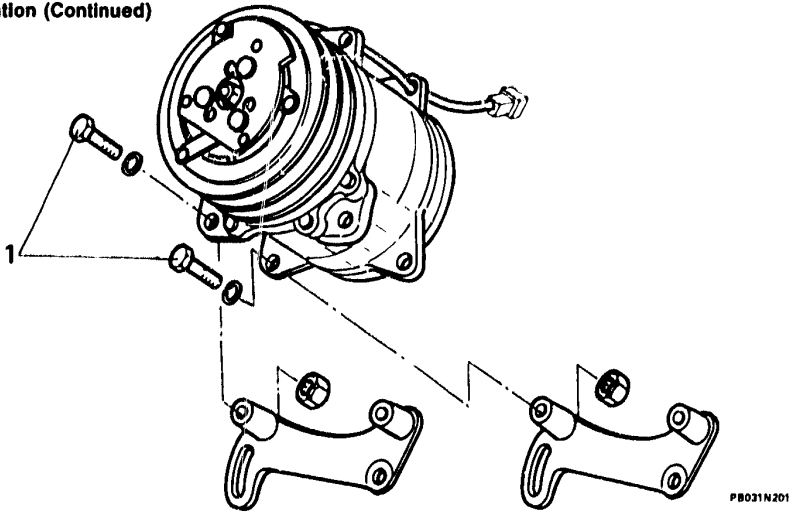

1. Unscrew the bolts and separate the brackets from the compressor.

- Once the compressor is refitted, retension the drive belt (See **GR. 00**) and replenish the circuit (**see 80-45**).

CONDENSERS - ELECTRIC FANS
Description

The function of the condensers is to effect a phase change of the refrigerant from gas (on leaving compressor) to liquid (on entering dehydrating filter). The condensers consist of a tube having a circular cross section in the shape of a coil and closed in a pack of flat fins.
The condensers are installed in front of the front wheel-houses, so as to exploit to the full the flow of air necessary for heat exchange when the vehicle is travelling at medium and high speeds. Under other conditions the air flow is provided by the electric fans mounted on the condensers.
The operation of the electric fan is under the control of the Trinary pressure switch which causes it to turn on when the pressure reaching the dehydrating filter attains the value of **15 to 17 bar,** and to turn off when the pressure drops by **3 to 4 bar**.

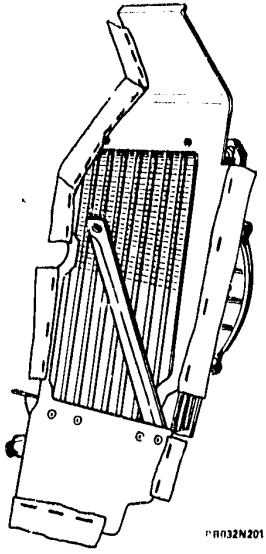

CONDENSERS - ELECTRIC FANS (Continued)
Removal - Installation

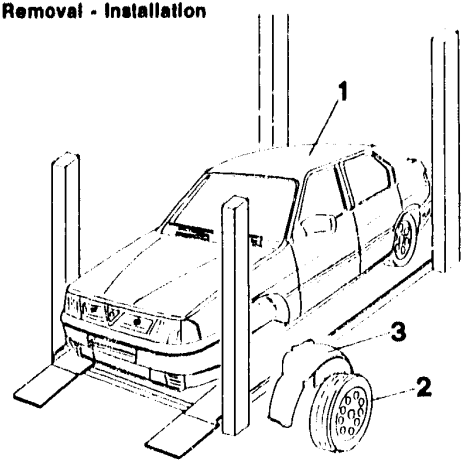

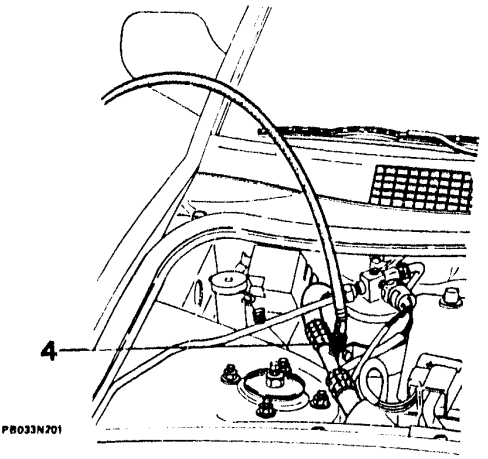

1. Set vehicle on lift.
- Disconnect negative battery terminal.
2. Remove the front wheels.
3. Remove the gravel guards (See **GR. 75**).
- Remove the bonnet (See **GR. 56**).
- Remove the front headlights (See **GR. 40**).
4. Drain off the Freon fluid from the low pressure valve, connecting a suitable tube to the valve (see **80-49**).

⇩

CONDENSERS - ELECTRIC FANS
Removal - Installation (Continued)

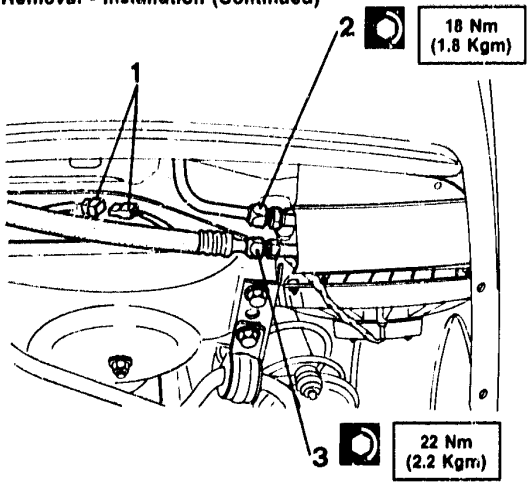

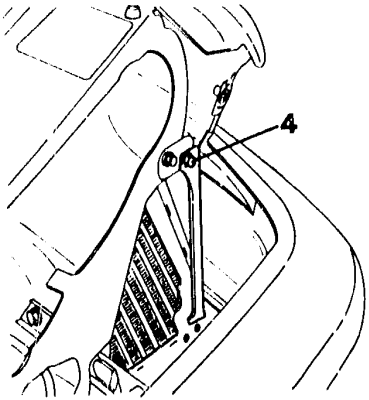

- Remove the LH condenser, proceeding as follows:
1. Disconnect the electric fan electrical connection.
2. Unscrew the union of the Freon inlet to condenser pipe.
3. Unscrew the union of the Freon outlet from condenser pipe.
4. Unscrew the screw securing the upper bracket to the body.

Replace the O-rings when refitting the unions.

CONDENSERS - ELECTRIC FANS
Removal - Installation (Continued)

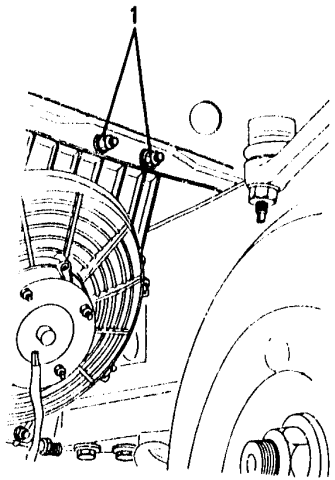

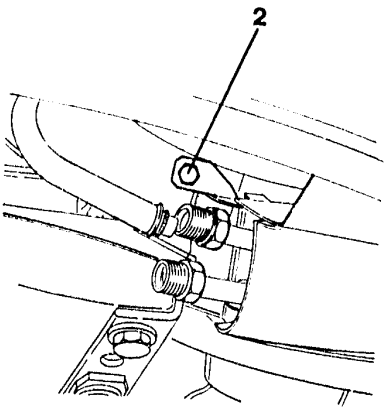

1. Remove the two screws located in the wheel-house.
2. Remove the front screw and remove the condenser together with the electric fan.

- Remove the RH condenser, proceeding as for the LH one.

CONDENSERS - ELECTRIC FANS (continued)

Disassembly

1. Remove the four bolts and separate the electric fan together with its support from the condenser.
2. Remove the four bolts and separate the electric fan from the plastic support.

NOTA The electric fan can be disassembled in the vehicle, without removing the condenser.

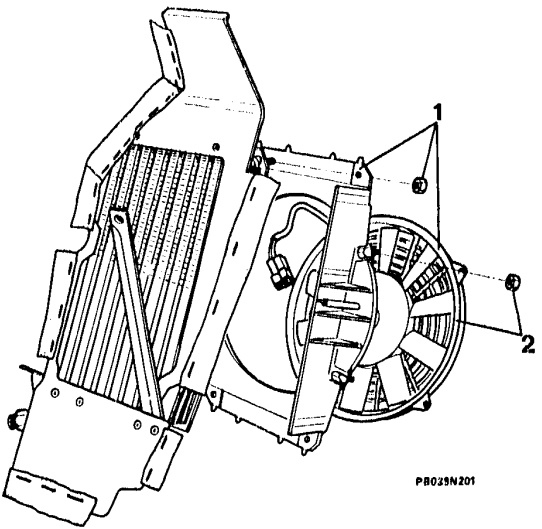

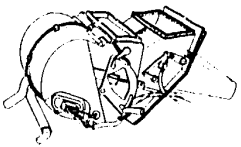

PB056N201

CONDITIONER (Premodification) (Cont.)

CONDITIONER (Premodification)

DEHYDRATING FILTER - TRINARY PRESSURE SWITCH ..... 80 - 36
Description ..... 80 - 36
Removal - Installation ..... 80 - 37
EXPANSION VALVE ..... 80 - 38
Description ..... 80 - 38
Removal - Installation ..... 80 - 39
EVAPORATOR UNIT ..... 80 - 41
Description ..... 80 - 41
Removal - Installation ..... 80 - 42
Disassembly ..... 80 - 43
PIPING ..... 80 - 44
Replacement ..... 80 - 44
REFRIGERANT REFILL ..... 80 - 45
Warnings ..... 80 - 45
System vacuum ..... 80 - 47
REFRIGERANT DRAIN-OFF ..... 80 - 49
INSPECTION AND CHECKS ..... 80 - 50
SYSTEM TIGHTNESS CHECK ..... 80 - 51

DEHYDRATING FILTER - TRINARY PRESSURE SWITCH
Description

The dehydrating filter is installed downstream of the compressor. Consequently, the refrigerant is fed through it in the liquid state.
Besides eliminating solid particles and moisture that may be present in the refrigerant, the filter acts as a receiver tank during the variable loading phases of the system.
On the dehydrating filter there is a Trinary pressure switch installed which controls how the system is working.
The functions of the pressure switch are as follows:

- It turns off the compressor electromagnetic coupling when there is a pressure drop resulting from system leakage (i.e., it acts as a minimum pressure switch).
- It turns off the electromagnetic coupling in the event of undue pressure rise resulting from the malfunctioning of a component of the system (i.e., it acts as a maximum pressure switch).
- It operates the electric fans of the condensers.

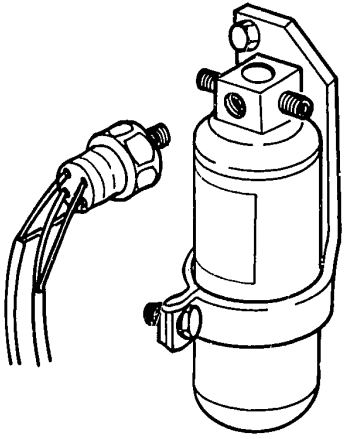

PB037N201

DEHYDRATING FILTER - TRINARY PRESSURE SWITCH (Continued)

Removal - Installation

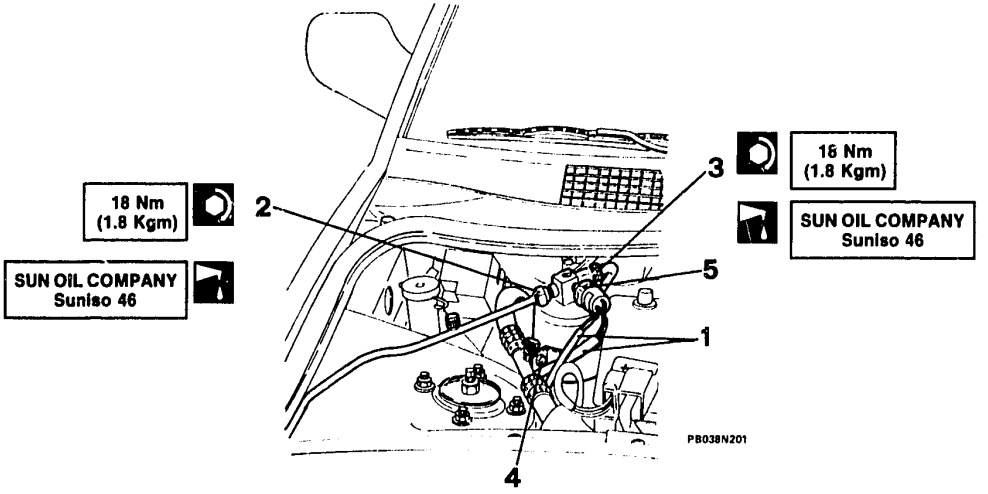

- Disconnect negative battery terminal.
- Drain off the Freon fluid from the low pressure valve, connecting a suitable tube to the valve (see **80-49**).

1. Disconnect the Trinary pressure switch wiring.
2. Unscrew the Freon inlet pipe union.
3. Unscrew the Freon outlet pipe union.
4. Slacken off the clamp screw and remove the dehydrating filter together with the Trinary pressure switch.
5. Separate the pressure switch from the dehydrating filter.

Replace the O-rings when refitting the unions.

EXPANSION VALVE
Description

The expansion valve is located at the entrance to the evaporator. It has inside a nozzle controlled by a thermostatic sensor which modulates the expansion of the refrigerant. Since the pressures which build up in the conditioning system are linked to the engine r.p.m. which fluctuates considerably, the expansion valve is regulated automatically by means of a thermostatic bulb. This opens the nozzle of the valve more or less, depending on the temperature of the gas leaving the evaporator. This means that the evaporator receives just the right amount of refrigerant for this to be completely evaporated.

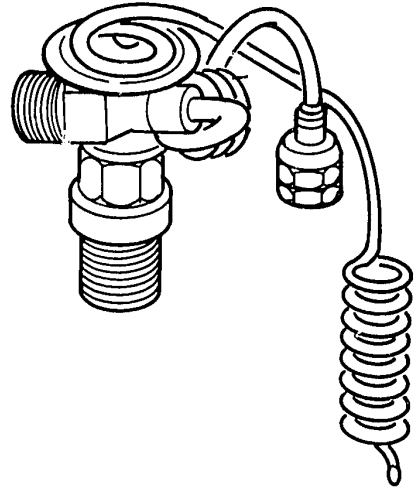

PB039N201

EXPANSION VALVE (Continued)
Removal - Installation

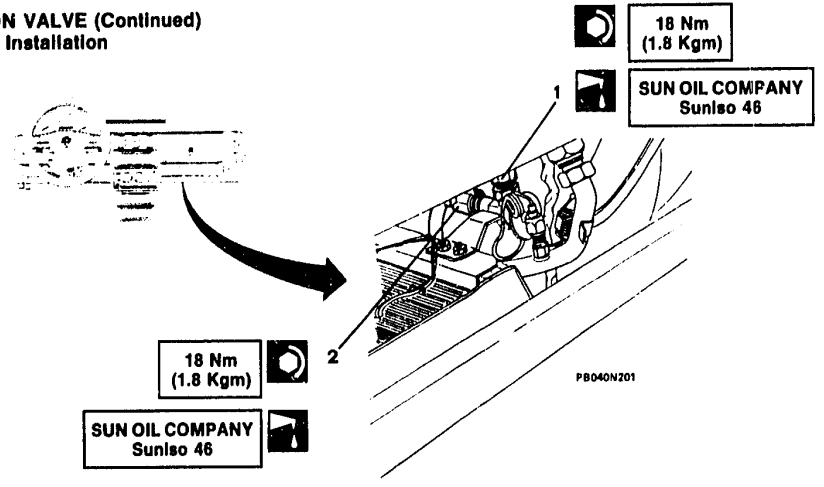

- Disconnect negative battery terminal.
- Drain off the Freon from the system (see **80-49**).
- Remove trim on underside of dashboard (RH side) - See **GR. 66**. Disconnect connector from air conditioner control unit.
- Only for 16 valve models, remove MOTRONIC ECU (See **GR. 43**).
- Remove entire oddment tray (See **GR. 66**).
- Pull back tarred lining.

1. Unscrew union of delivery to expansion valve pipe.
2. Disconnect union connecting expansion valve to evaporator, unscrewing it by way of the hole in the service compartment.

EXPANSION VALVE
Removal - Installation (Continued)

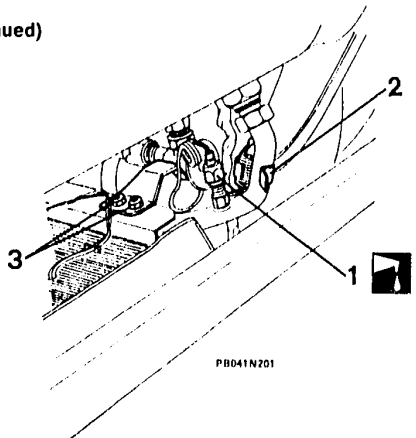

SUN OIL COMPANY
Sunlso 46

1. Unscrew the connection between the external equalizer and the evaporator outlet pipe.
2. Remove the spring securing the thermostat sensor.
3. Unscrew the two screws securing the expansion valve bracket and remove.

Replace the O-rings when re-connecting the connections.

NOTE For vehicles equipped with ABS system the procedure for the removal of the expansion valve is as follows:
- **Remove the evaporator assembly together with the expansion valve**
- **Perform bench separation of the evaporator expansion valve.**

EVAPORATOR UNIT
Description

The evaporator is located in the low pressure part of the system.
The refrigerant arriving from the expansion valve collects here in the state of a gas.
It absorbs heat from the environment, so that it can be sucked in by the compressor as a gas.
The cooling capacity of the evaporator also allows drying of the air. Condensation forms on the fins of the evaporator and is collected and drained off along a duct to the outside of the car.
The evaporator is controlled by the expansion valve, which regulates the amount of refrigerant so that the compressor does not suck in fluid in the liquid state.

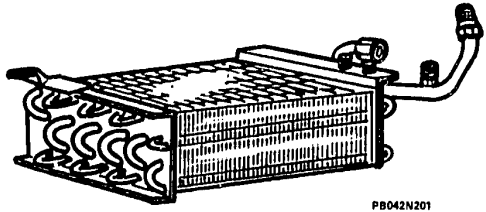

PB042N201

EVAPORATOR UNIT (Continued)
Removal - Installation

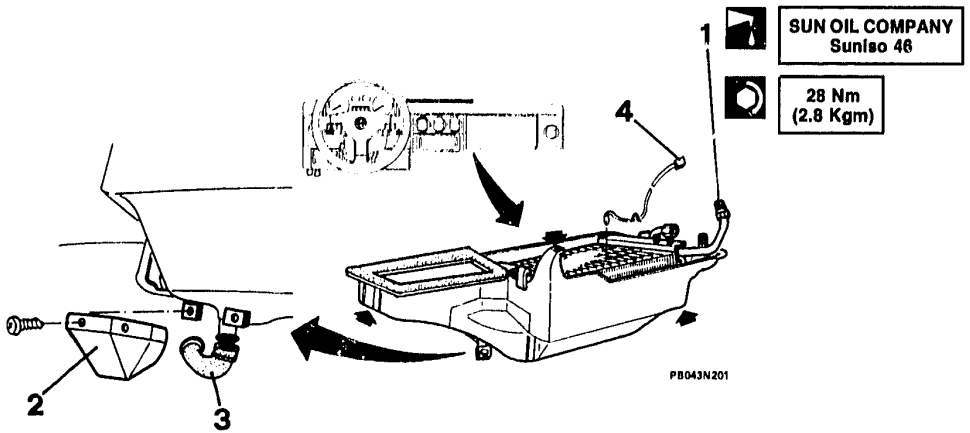

- Disconnect negative battery terminal.
- Drain off the Freon from the system (see **80-49**).
- Remove the expansion valve (see **80-39**).

1. Unscrew the union of connecting the evaporator outlet pipe to the compressor delivery pipe.

- Remove the central console (See **GR. 66**).

2. Remove drain-off pipe protection.
3. Disconnect the drain-off pipe.
4. Disconnect the temperature sensor connection (anti-frost).

- Remove the evaporator unit after first unscrewing the 3 screws holding it in place.

EVAPORATOR UNIT (Continued)
Disassembly

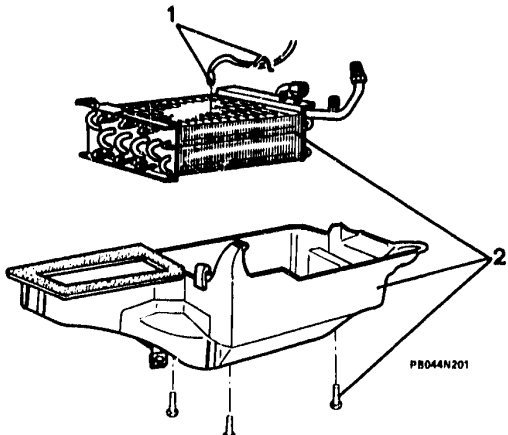

1. Remove the wiring grip and take out the temperature sensor (antifrost) from the evaporator.
2. Unscrew the three screws and separate the plastic protection from the evaporator.

NOTE Starting from Chassis No. 5646075, the temperature sensor is inserted from the underside.

PIPING
Replacement

- Drain off Freon from system (See **80-50**).
1. Unscrew end unions of length of piping to be replaced.

Plug the pipes to stop moisture and impurities entering the system.

2. Fit new pipes back on, using new O-rings and lubricating the unions with the specified oil.
- Replenish the system with the specified Freon (See **80-45**).

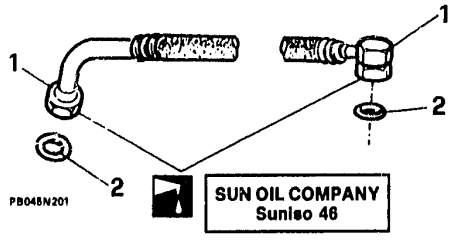

REFRIGERANT REFILL
Warnings

- Freon is a fluid that is susceptible to physical changes which may be harmful if not carefully controlled. Therefore it is strictly necessary to follow the warnings below.
- The refrigerant is normally kept in metal cylinders. Never expose the cylinders to sunlight for long periods, since the increase in temperature causes the pressure to increase and thus exceed the safety limit.
- During cold months pouring the fluid from the cylinders to the charging unit is likely to be difficult because of the lack of pressure in the cylinder. In this case, before pouring, place the cylinder in a warm atmosphere with a temperature of not more than 35°C for approximately 20 minutes. Never use a naked flame to heat the cylinder.
  Never leave the charging unit canister completely full for any length of time.

REFRIGERANT REFILL (Continued)

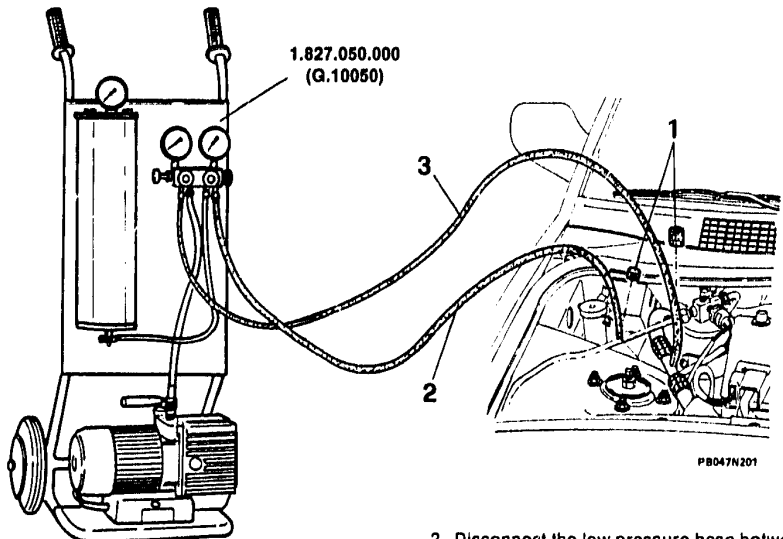

- For refilling of system use refilling station N° 1.827.050.000 (G10050).

1. Unscrew and remove plugs of valves on high pressure and low pressure hoses.
2. Disconnect the low pressure hose between the corresponding tap on the station and the valve on the hose between the evaporator and compressor.
3. Connect the high pressure hose between the corresponding tap on the station and the valve on the hose between the RH condenser and dehydrating filter.

REFRIGERANT REFILL (Continued)
System vacuum

1. Open high and low pressure taps.
2. Open vacuum tap.
3. Start electric motor of the station and check that the pointers of the two pressure gauges drop below zero.
   - If pointers do not drop below zero, this denotes leaks in the system (proceed as described in **80-51**).
   - Maintain vacuum in the system for 40 minutes.
   - Close vacuum tap.
4. Switch off electric motor.
   - Close low pressure tap.

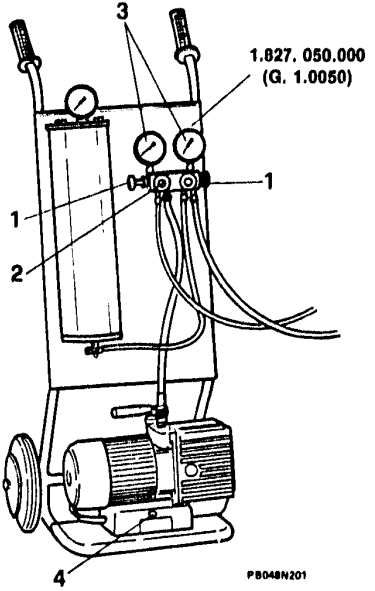

REFRIGERANT REFILL (Continued)

1. Open refill tap and canister tap until specified refilling of the system is reached.

FREON 12	Quantity 1150 g.

Should the specified quantity of Freon not enter the circuit by itself, proceed as follows:
a. Close high pressure tap.
b. Start engine.
c. Switch on compressor.
d. Open gradually the low pressure tap until the specified quantity of Freon has been transferred from the canister to the air conditioning system of the vehicle.

- Close all taps and disconnect the station piping from the system.

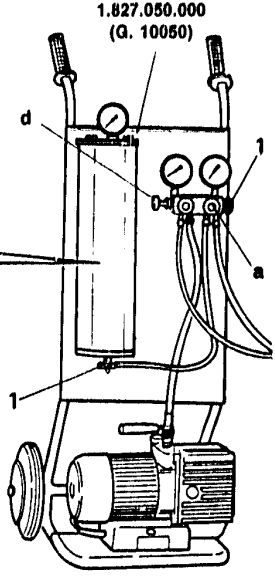

PB048N201

REFRIGERANT DRAIN-OFF

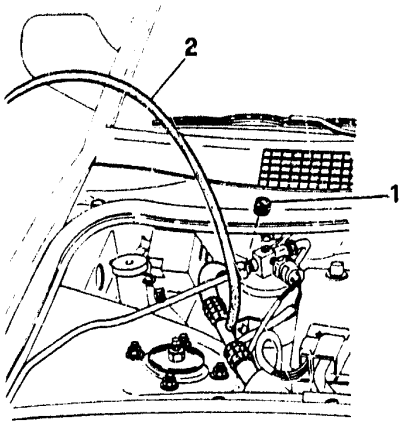

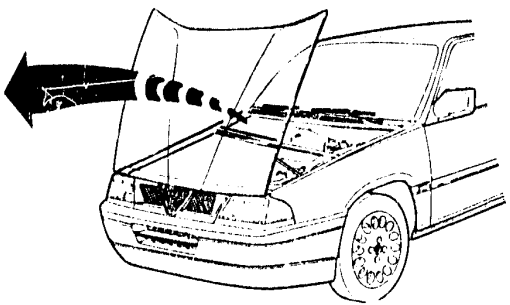

PB060N201

1. Unscrew and remove the cap of the valve on the low pressure hose (hose between evaporator and compressor).
2. Apply hose equipped with pin connection to the pressure valve and drain off the Freon fluid completely from the system, abiding by the safety regulations set down by law.

INSPECTION AND CHECKS

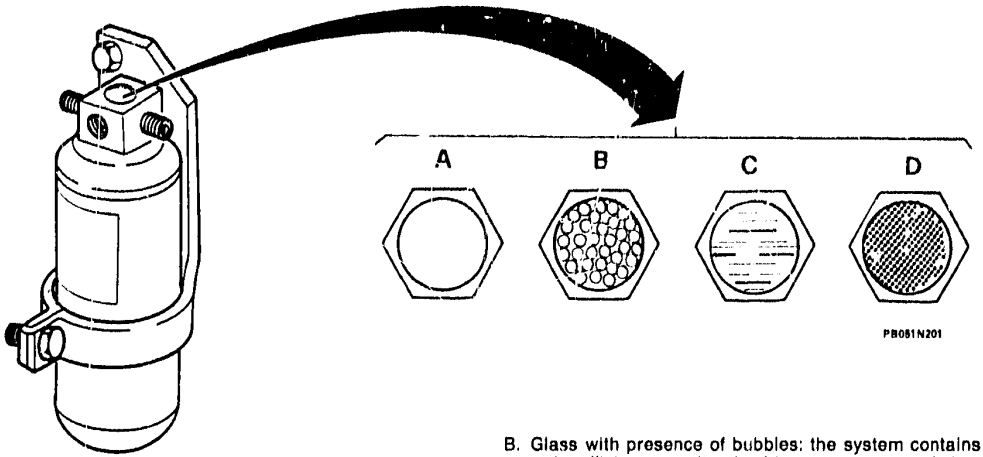

- On the top of the filter there is a sight glass which makes it possible to check how the system is working.

A. Clear glass: the system has been loaded correctly, or is completely without refrigerant.

B. Glass with presence of bubbles: the system contains an insufficient quantity of refrigerant, or some air has entered the system.

C. Glass with oily streaks: the system contains an insufficient quantity of refrigerant and the oil contained in the compressor is circulating in the system.

D. Glass with non-uniform fluid, stripy: the drying substance contained in the filter has separated off and is circulating in the system on account of breakage of retaining disks.

SYSTEM TIGHTNESS CHECK

- Check that all unions are tightened fully. If leaks persist, make sure that all the O-rings are present on the unions. Then pour in a quantity of Freon 12 (approx. 300 g.) and, using the leak detector N° 1.827.051.000 (G.10055), trace the leaks. Drain off Freon and eliminate the leaks.

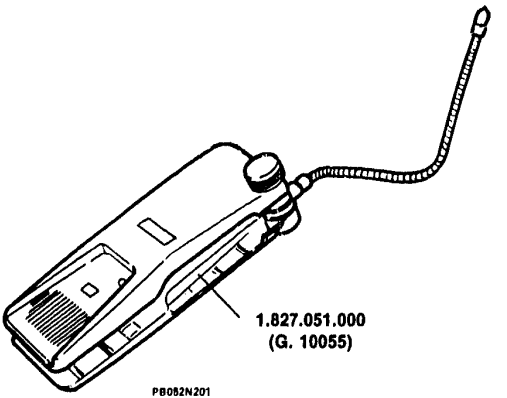

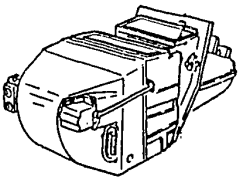

HEATING-VENTILATION (Postmodification)

HEATING-VENTILATION (Postmodification)

CONTROL ASSEMBLY ..... 80 - 52
OPERATION OF AIR CONDITIONING SYSTEM ..... 80 - 53
FUNCTIONAL DIAGRAMS ..... 80 - 55
Warm air recirculation ..... 80 - 56
Air recirculation ..... 80 - 57
Heated external air ..... 80 - 58
External air ..... 80 - 59
Conditioned recirculation air ..... 80 - 60
Conditioned external air ..... 80 - 61
INSTALLATION DIAGRAMS ..... 80 - 62

CONTROL ASSEMBLY

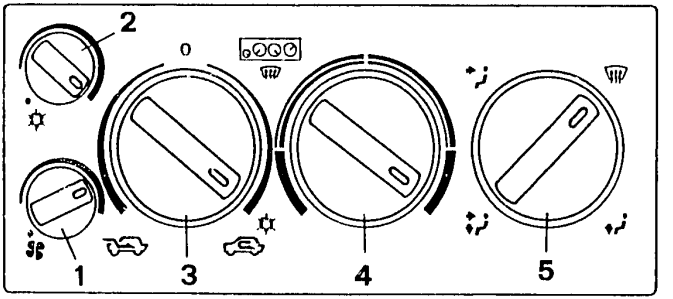

1. **Electric fan control**
   In position • the electric fan is off; to switch it on, rotate the knob clockwise. The speed of the fan increases as the knob is turned and maximum speed is obtained by rotating the knob as far right as possible.
2. **Air conditioner control**
   In position • the air conditioner is off; rotating the knob clockwise switches the conditioner on and the temperature can be adjusted as desired.
3. **External or recirculation air control**
   When the knob is at position 0 the air flow is shut off; by rotating the knob towards the left, the quantity of external air entering the passenger compartment can be adjusted while rotating it right adjusts the delivery of recirculation air.
4. **Air temperature control**
   Heating is off when the knob is rotated all the way to the left. To gradually increase the temperature, rotate the knob towards the right. The hightest temperature is obtained by rotating the knob as far right as possible.
5. **Air distribution**
   Directs the flow of air to the various vents (apart from those supplied directly by external air).

OPERATION OF AIR CONDITIONING SYSTEM

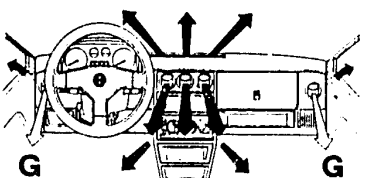

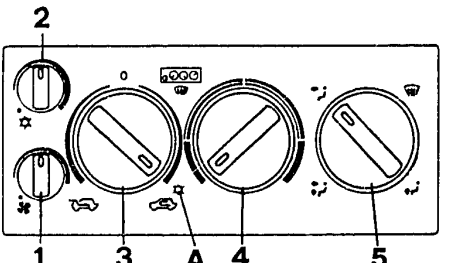

To operate the air conditioning proceeed as follows:
- start the engine;
- close all the windows, the sunroof and the vents G for dynamic ventilation.
- turn knob 3 fully to the right (air ricirculaton) or fully to the left (external air). Knob 3 should not be in positiom 0;
- check that knob 4 is rotated fully to the left (at the end of the blue area);
- start the conditioner by rotating knob 2 clockwise and adjust to obtain the desired temperature. Warning lamp A will come on when the air conditioner is on.

NOTE: **When the comditioner is switched on the electric fan will automatically come on at its slowest speed.**

OPERATION OF AIR CONDITIONING SYSTEM (Continued)

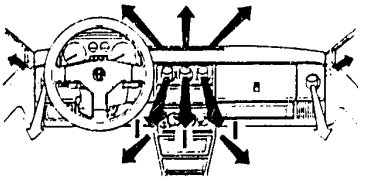

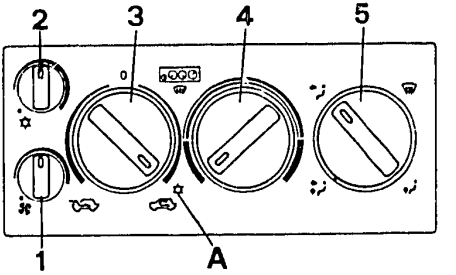

- To increase the volume of air, rotate knob 1 (electric fan control) towards the right.
- To obtain the greatest efficiency from the air conditioning system, set:
  knob 5 to the frontal air position (fully open the vents) and knobs 1, 2 and 3 fully to the right.
- To switch off the air conditioner rotate knob 2 anticlockwise to position •

NOTE: The conditioner is also switched off by turning knob 3 to position 0.
The air conditioner must only be used when knob 3 has been turned to the left (external air) or to the right (recirculation air)

Advice and warnings

The air conditioner can only work when the engine is running.
When driving it is possible to vary the temperature in the passenger compartment by acting on controls 1 and 2.
Do not keep knob 2 on the conditioner at maximum and the electric fan at slow speeds when driving fast when the knob 3 is positioned to the right (air recirculation).
To rapidly lower the temperature in the passenger compartment (after the vehicle has been parked in the sun, for example), wind the windows down and switch the conditioner to maximum.

FUNCTIONAL DIAGRAMS

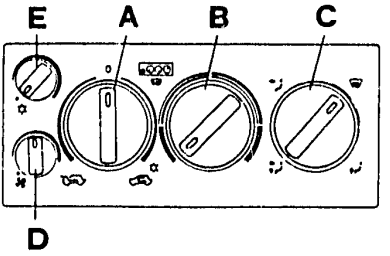

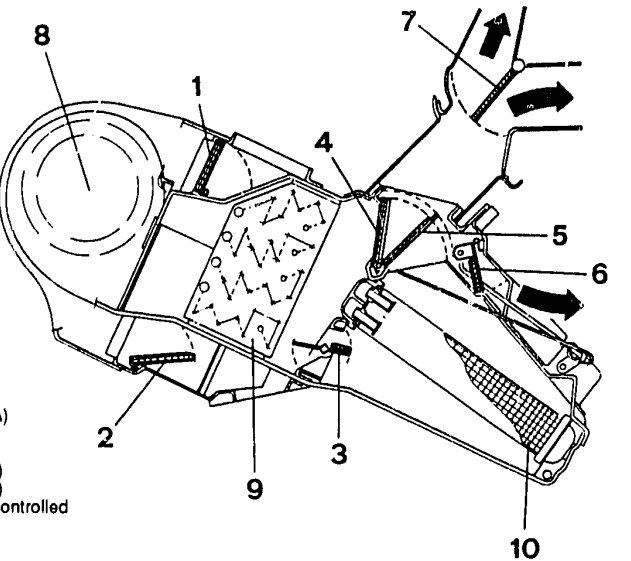

1. External air intake shutter (controlled by A)
2. Recirculation air intake shutter (controlled by A)
3. Mixing shutter (controlled by B)
4. Mixing shutter (controlled by B)
5. Air-to-floor distribution shutter (controlled by C)
6. Air-to-floor distribution shutter (controlled by C)
7. Frontal air distribution and window defrosting (controlled by C)
8. Electric fan (controlled by D)
9. Evaporator (controlled by E)
10. Heater (controlled by B)

FUNCTIONAL DIAGRAMS (Continued)

Warm air recirculation (for example, with knob at)

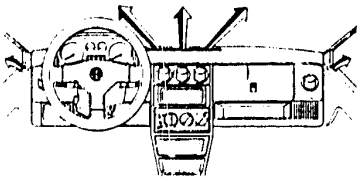

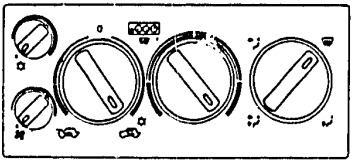

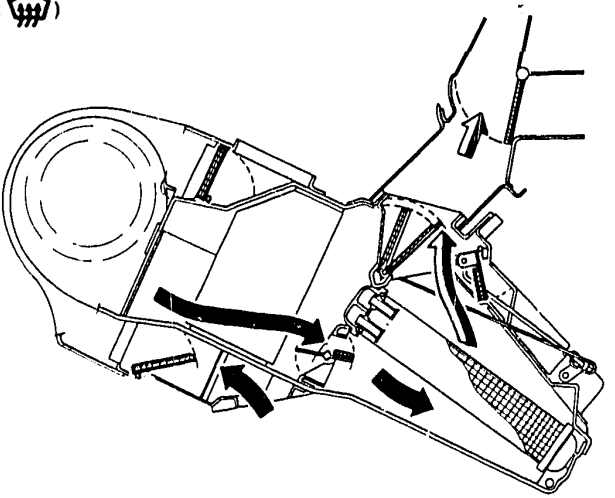

- To increase the flow of air, act on the electric fan control knob.
- To obtain an intermediate temperature, act on the air temperature regulation knob.

RECIRCULATION AIR

HEATED AIR

FUNCTIONAL DIAGRAMS (Continued)
Air recirculation (for example with knob at)

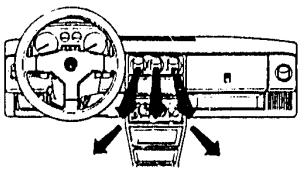

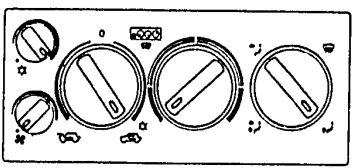

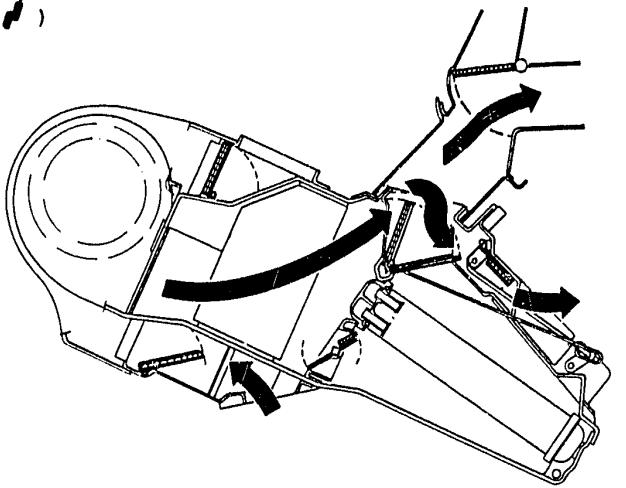

- To increase the flow of air, act on the electric fan control knob.

RECIRCULATION AIR

FUNCTIONAL DIAGRAMS (Continued)
Heated external air (for example with knob at)

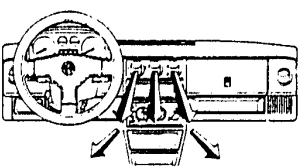

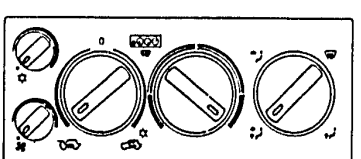

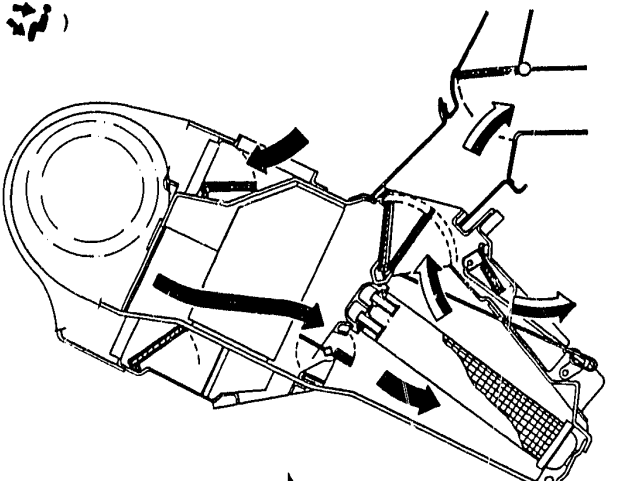

EXTERNAL AIR

HEATED AIR

- To increase the flow of air, act on the electric fan control knob.
- To obtain an intermediate temperature, act on the air temperature regulation knob.

FUNCTIONAL DIAGRAMS (Continued)
External air (for example with the knob at)

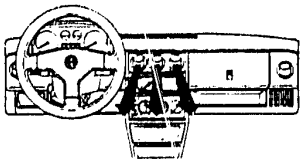

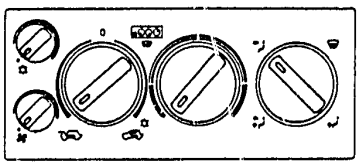

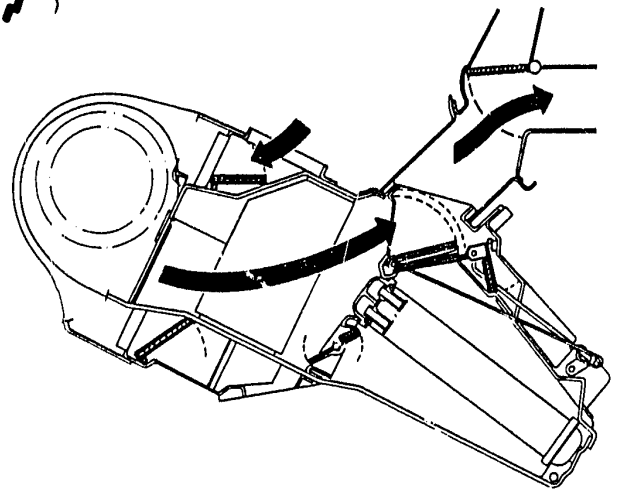

- To increase the flow of air, act on the electric fan control knob.

EXTERNAL AIR

FUNCTIONAL DIAGRAMS (Continued)

Conditioned recirculation air (for example with knob at)

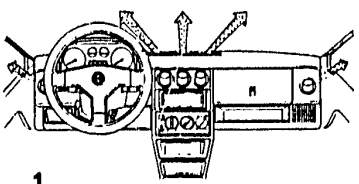

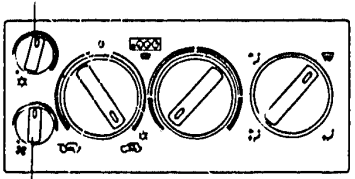

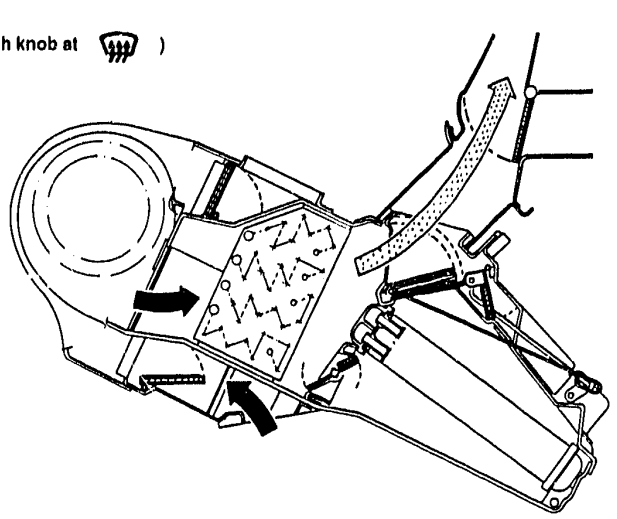

The air conditioner will only function when the engine is running.

To regulate temperature in the passenger compartment to compensate wor external variations in weather and vehicle speed, act on controls (1) and (2).

RECIRCULATION AIR

CONDITIONED AIR

FUNCTIONAL DIAGRAMS (Continued)

Conditioned external air (for example with the knob at)

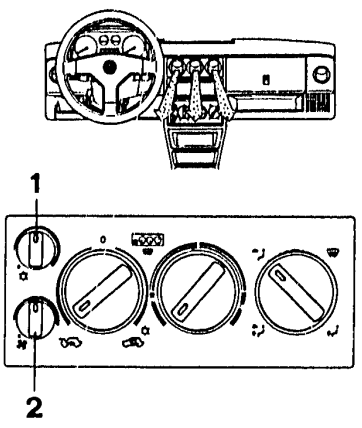

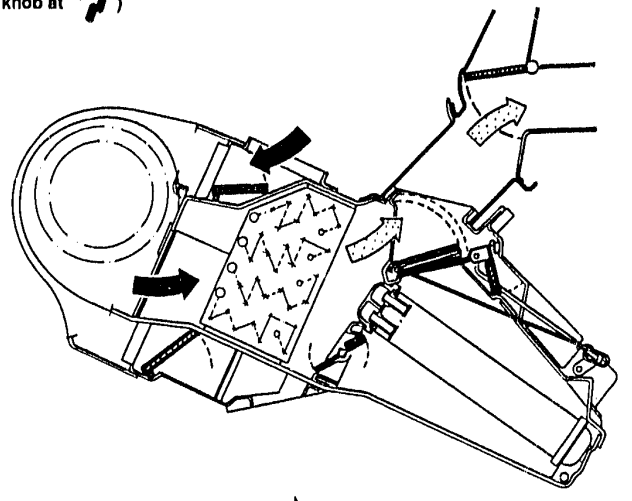

The conditioner will only function when the engine is running.

To regulate temperature in the passenger compartment to compensate for external variations in weather and vehicle speed, act on controls (1) and (2).

EXTERNAL AIR

CONDITIONED AIR

INSTALLATION DIAGRAMS

1. Compressor
2. Condenser
3. Dehydrating filter
4. Trinary pressure switch
5. Needle valve for charging-discharging on low pressure hose.
6. Needle valve for charging/discharging on high pressure hose
7. Expansion valve
8. Evaporator/heater unit

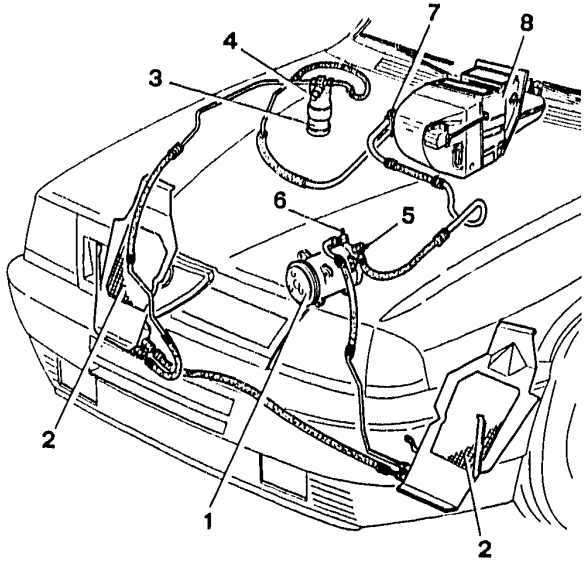

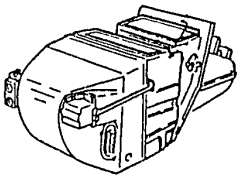

HEATING-VENTILATION (Postmodification) (continued)

HEATING-VENTILATION (Postmodification)

HEATER - EVAPORATOR
UNIT ..... 80 - 63
Assembly ..... 80 - 63
Removal - Refitting ..... 80 - 64
Replacing the electric fan ..... 80 - 73

HEATING-VENTILATION (Postmodification)

HEATER - EVAPORATOR UNIT

Assembly

1. Electric fan speed resistance
2. Water intercept valve complete motor and hoses
3. External air recirculation shutter control rod
4. Fan cover
5. Electric fan
6. Clamp
7. Mixing control Bowden
8. Air mixing shutter control rod
9. External air recirculation shutter control rod
10. Gasket
11. Brackets
12. Lower casing half
13. Heater
14. Evaporator
15. Frost sensor
16. Expansion valve
17. External air - recirculation adjustment motor
18. Air temperature regulation motor
19. Upper casing half

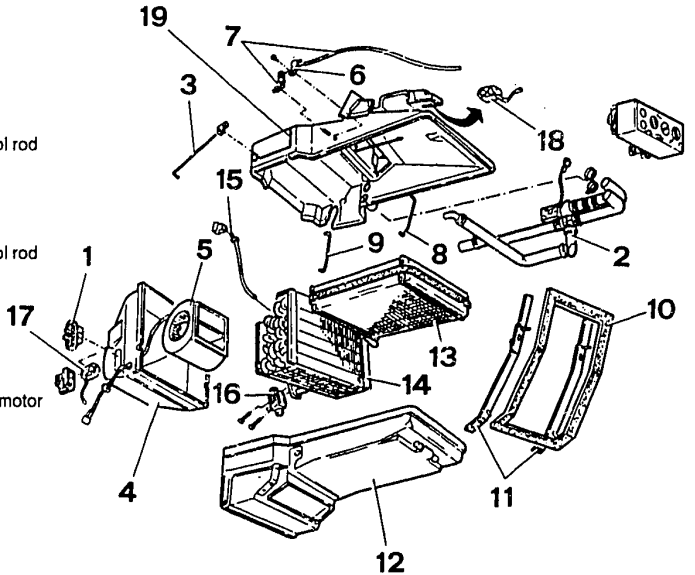

HEATER - EVAPORATOR UNIT (Continued)
Removal/Refitting

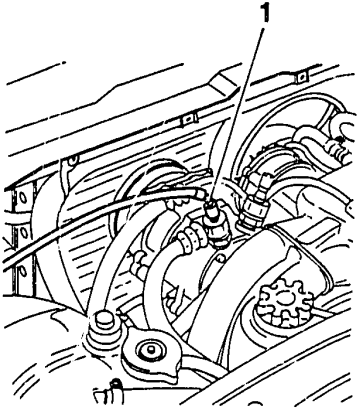

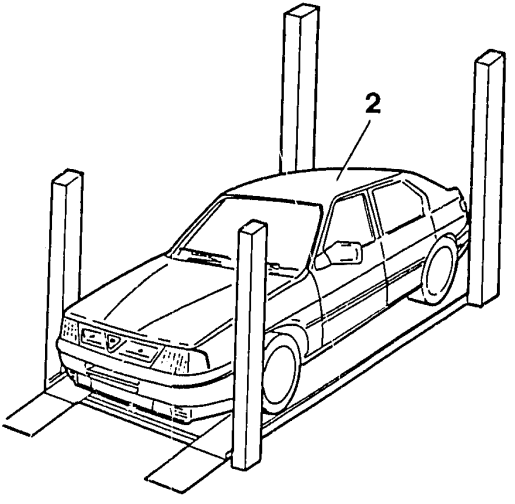

1. Drain the Freon from the low pressure valve and connect it to a suitable drainage hose in accordance with the current laws.

2. Place the vehicle on a lift.
   - Drain off the engine cooling liquid.
   - Remove the battery.

⇩

Removal/Refitting (Continued)

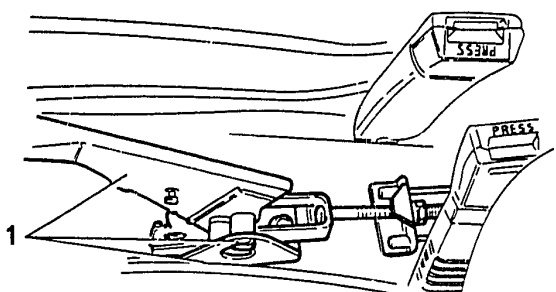

- Remove the rear console (see GR. 66).
1. Disconnect the handbrake lever from its support by unscrewing the bolt.
- Remove the right and left-hand trim from under the dashboard (see GR. 66).
- Remove the central gearbox console (see GR. 66).

⇩

Removal/Refitting (Continued)

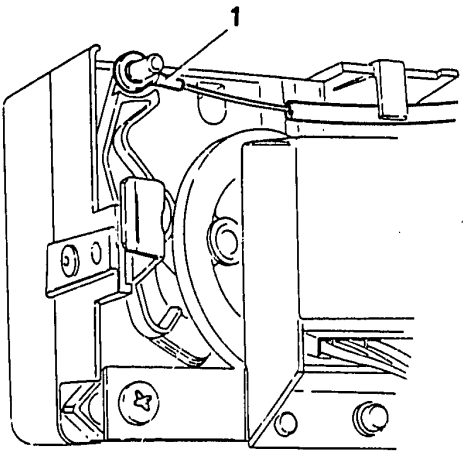

1. Disconnect the air flow distribution control Bowden from the heating-ventilation control assembly.
- Loosen the 3 screws securing the microswitch support bracket. Move the bracket and remove the 3 spacers.

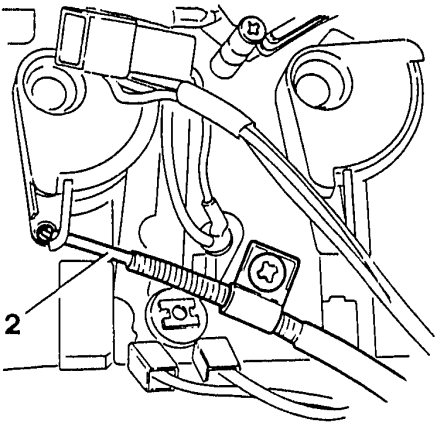

2. Disconnect the air temperature regulation control Bowden from the control assembly.

Removal/Refitting (Continued)

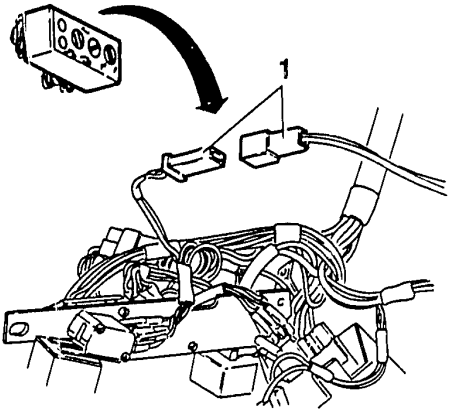

1. Disconnect the air flow distribution connection from the heating- ventilation control assembly.

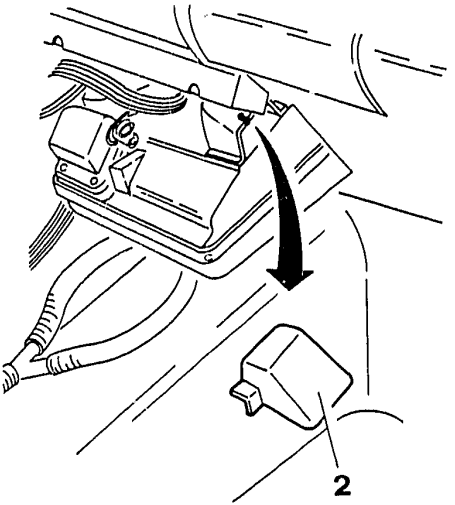

2. Remove the twc air-to-floor fans.

Removal/Refitting (Continued)

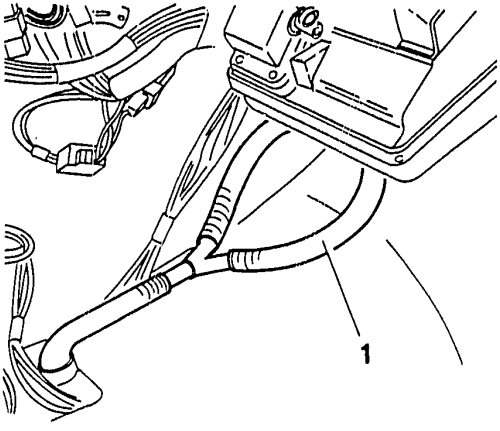

1. Disconnect the water drainage hose from the heater - evaporator unit.
- Remove the bonnet catch (see GR. 56).

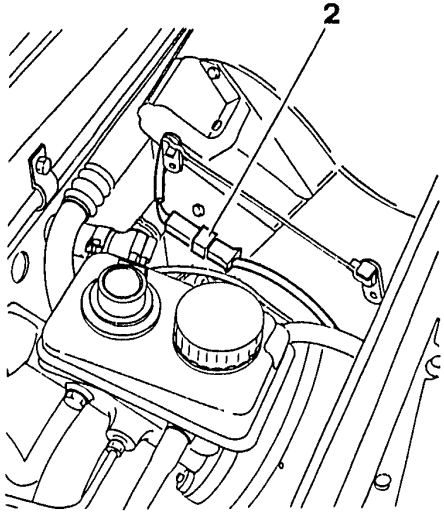

2. Disconnect the recirculation - external air control motor power supply connection.

⇩

Removal/Refitting (Continued)

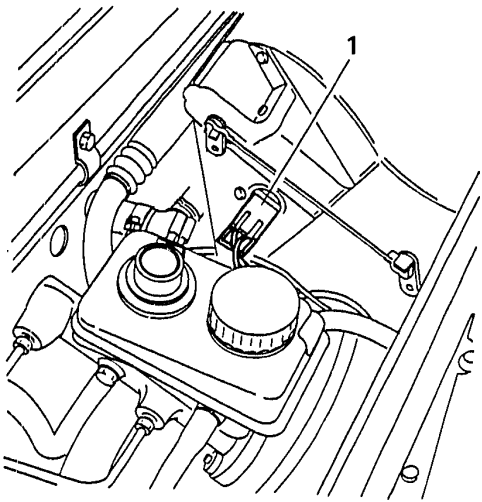

1. Disconnect the motor speed resistance connection.

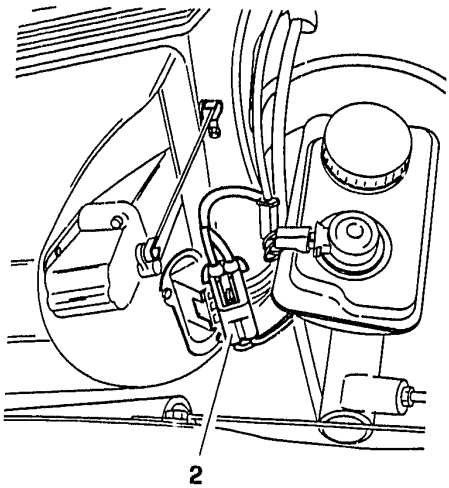

2. Disconnect the electric fan motor power supply connection.

Removal/Refitting (Continued)

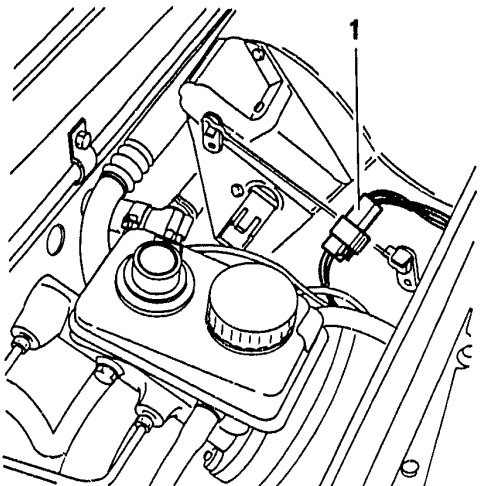

1. Disconnect the frost sensor connection.

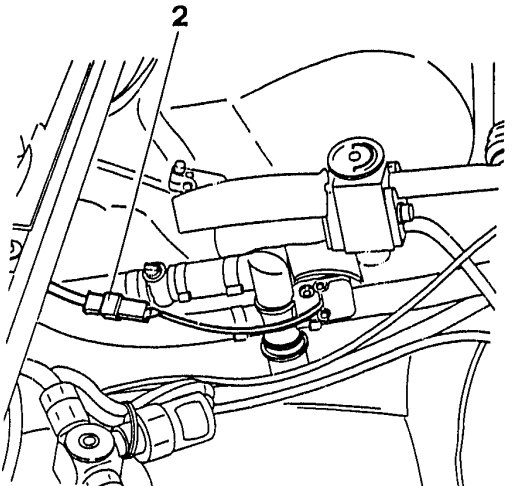

2. Disconnect the water intercept motor power supply connection.

⇩

Removal/Refitting (Continued)

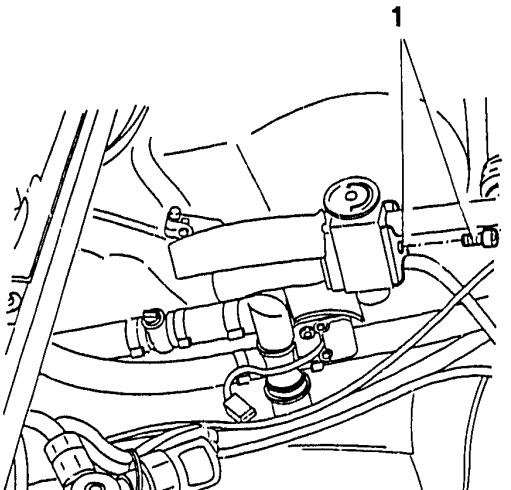

1. Loosen the screw securing the hose retaining plate to the expansion valve and remove the plate.
- Remove the corrugated sleeve.

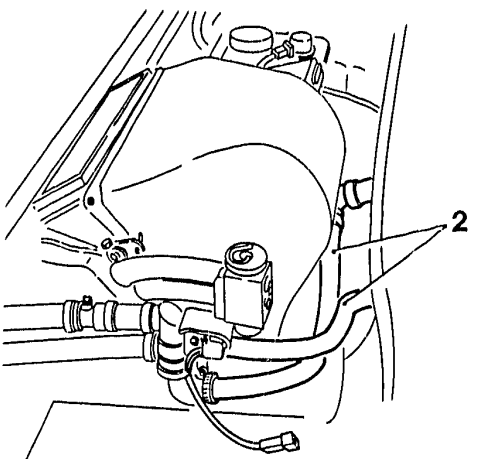

2. Disconnect the two water to heater delivery and return hoses from the intermediate connection.



Removal/Refitting (Continued)

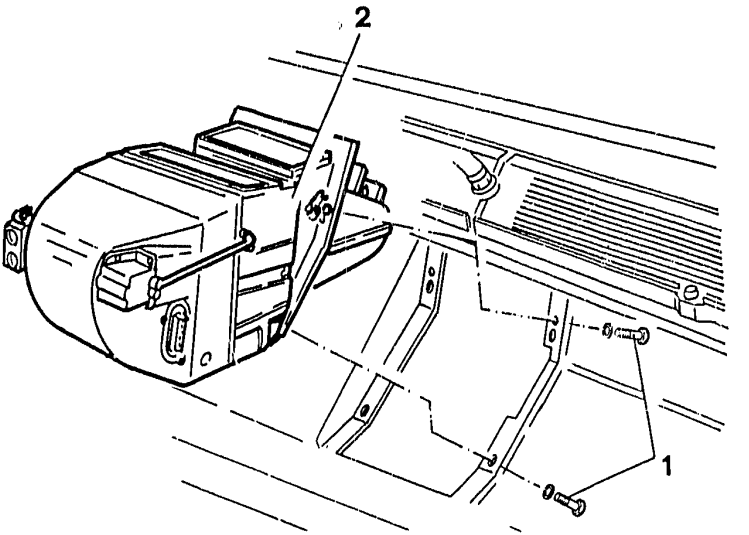

1. Working in the passenger compartment, loosen the four screws securing the heater - evaporator unit to the body.
2. Remove the heater - evaporator unit.

Replacing the electric fan

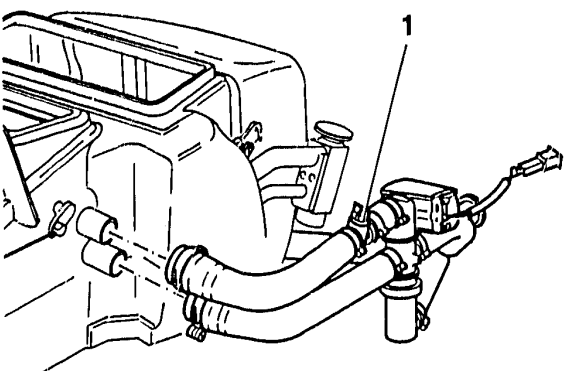

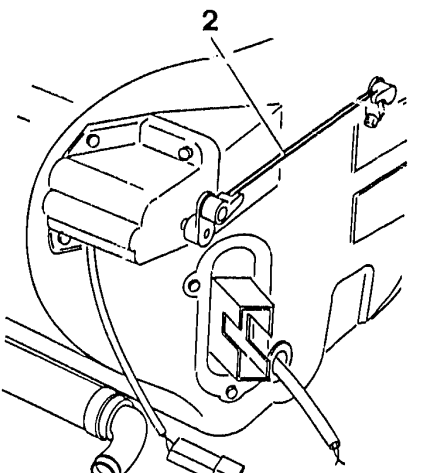

- Remove the entire heater - evaporator unit (see 80-65).
1. Remove the water intercept valve complete with motor and hoses.
2. Disconnect the shutter control rod from the external - recirculation air motor.

⇩

Replacing the electric fan (Continued)

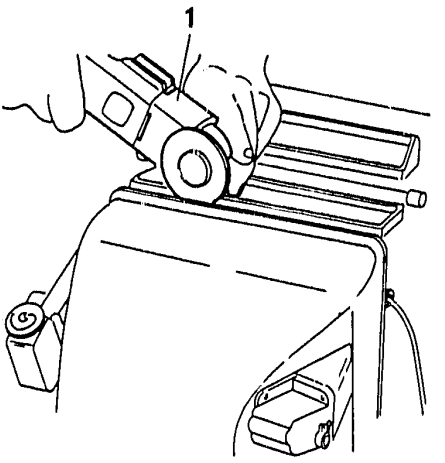

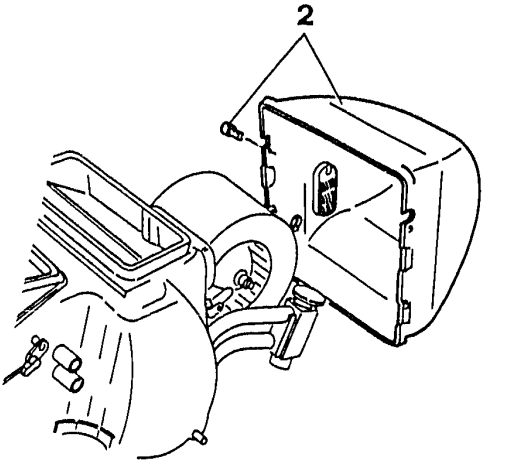

1. Using a suitable tool, cut away the sealant from between the fan cover and casing.
2. Loosen the screws and remove the cover.

Replacing the electric fan (Continued)

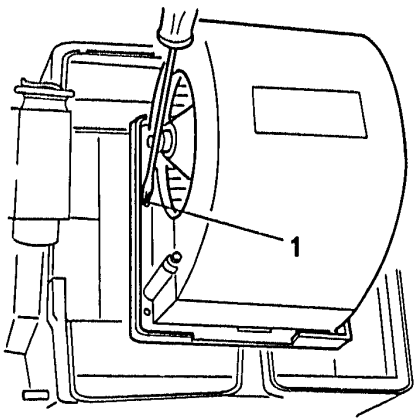

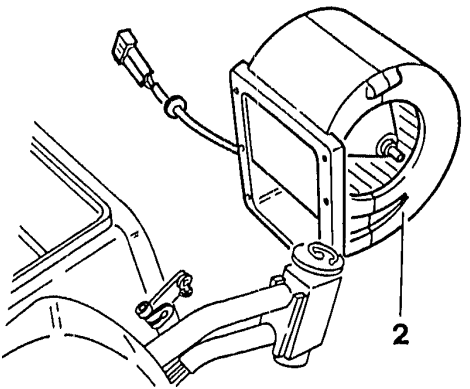

1. Loosen the screws securing the electric fan to the casing.
2. Remove the entire electric fan.

Refit by reversing the procedure followed for removal and:

- **clean the plastic mating surfaces (originally sealed) with methylated spirits;**
- **apply silicone sealant evenly to both of the mating surfaces ensuring that there are no air bubbles.**

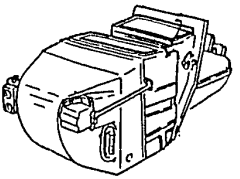

HEATING-VENTILATION (Postmodification) (continued)

HEATING-VENTILATION (Postmodification)

HEATER - EVAPORATOR - UNIT (continued) ..... 80 - 76
Replacing the evaporator and heater ..... 80 - 76
Replacing the air temperature regulation motor ..... 80 - 82
Replacing the external air - recirculation regulation motor ..... 80 - 85
Replacing the water intercept motor ..... 80 - 87
Replacing the water intercept valve ..... 80 - 89
Replacing the expansion valve ..... 80 - 90

HEATING - VENTILATION (Postmodifiction)

HEATER - EVAPORATOR UNIT (Continued)

Replacing the evaporator and heater

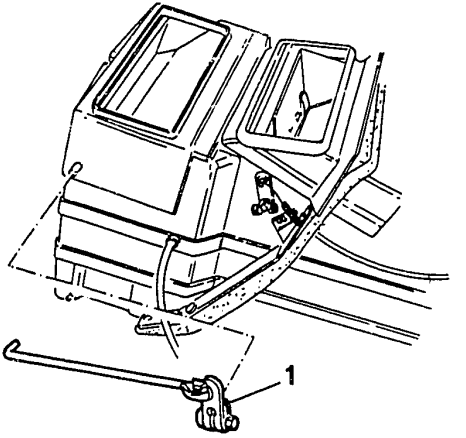

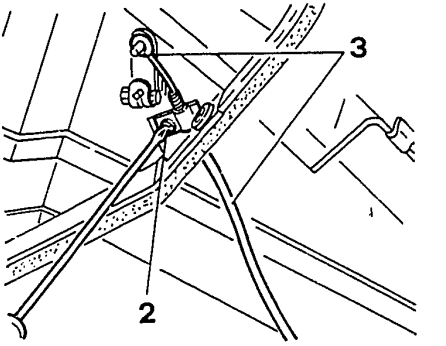

- Remove the entire heater - evaporator unit (see **80-64**).
- Remove the entire electric fan (see **80-73**).

1. Remove the external - recirculation air shutter control lever.
2. Remove the clamp securing the air mixing bowden.
3. Remove the air mixing control bowden.

⇩

Replacing the evaporator and heater (Continued)

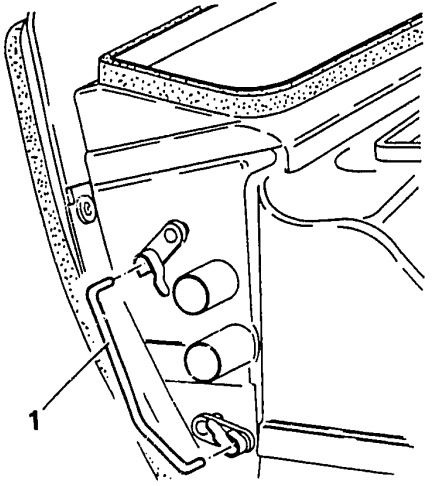

1. Remove the air mixing shutter control rod.

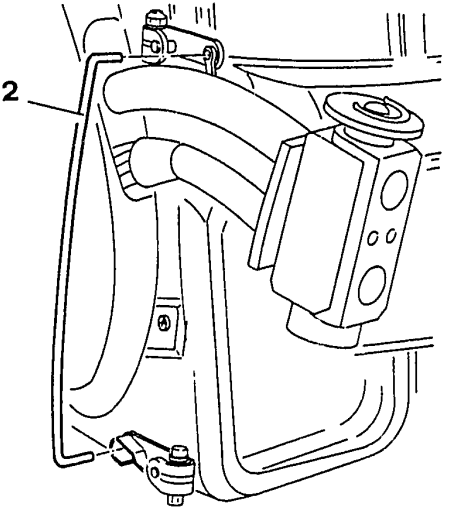

2. Remove the external air - recirculation shutter control rod.



Replacing the evaporator and heater (Continued)

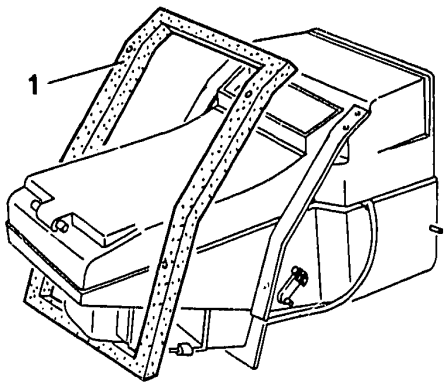

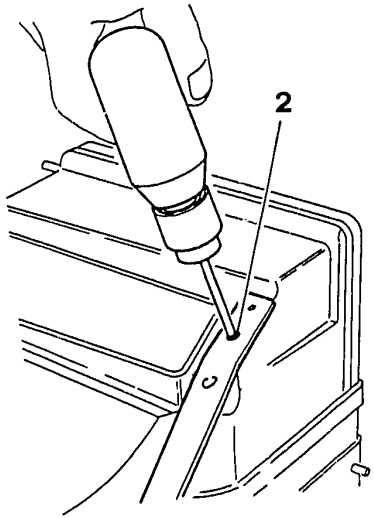

On a bench, rotate the assembly through 180°.

1. Using a knife, remove the gasket from the casing.

2. Using a drill, remove the rivets securing the support bracket to the casing.

⇩

Replacing the evaporator and heater (Continued)

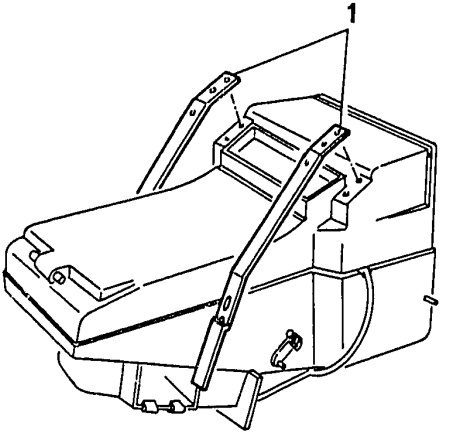

1. Remove the two support brackets and working on a bench, remove all traces of silicone.

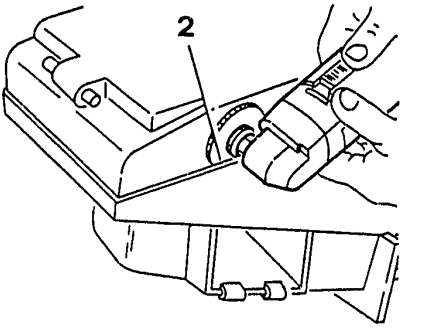

2. Using an appropriate tool cut the sealant from between the two casing halves.

⇩

Replacing the evaporator and heater (Continued)

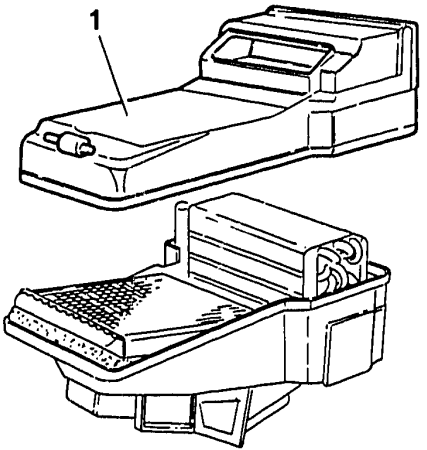

1. Remove the lower casing half.

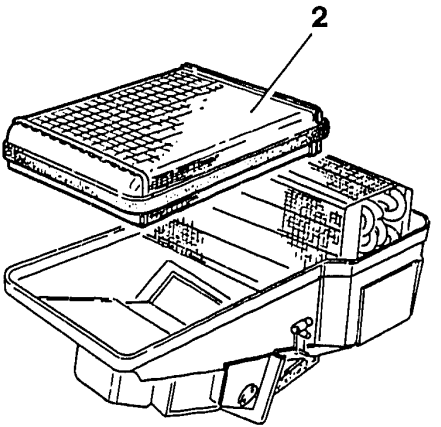

2. Remove the heater.



Replacing the evaporator and heater (Continued)

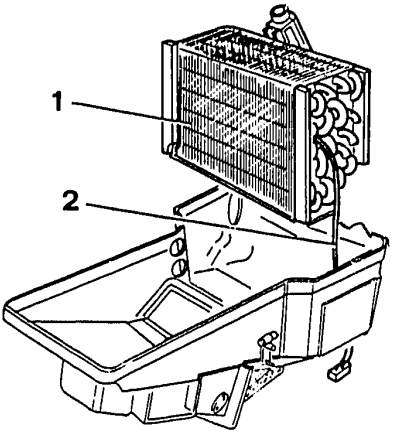

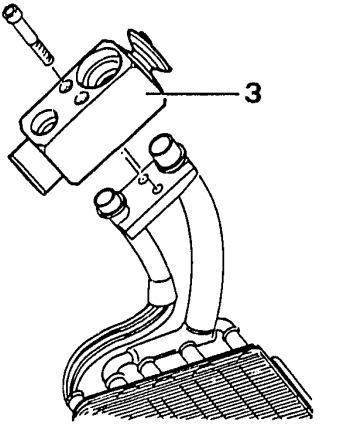

1. Remove the evaporator.
2. If necessary remove the press fitted frost sensor from the evaporator.
3. If necessary remove the expansion valve.

Refit by reversing the procedure followed for removal and:

- **clean the plastic mating surfaces (originally sealed) with methylated spirits;**
- **apply silicone sealant evenly to both of the mating surfaces ensuring that there are no air bubbles.**

Replacing the air temperature regulation motor

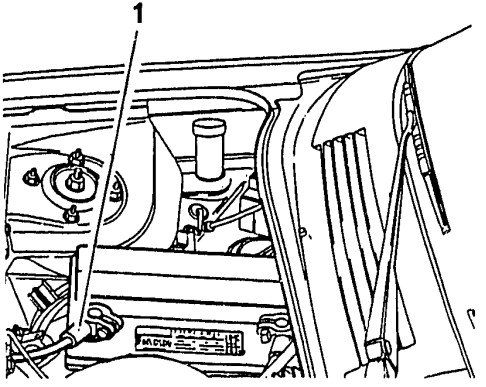

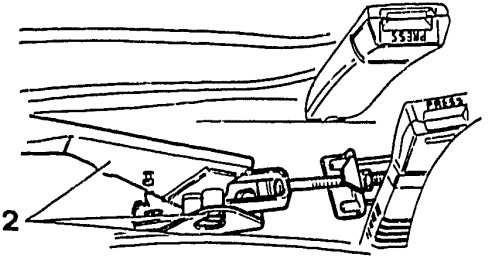

1. Disconnect the negative cable from the battery.

- Remove the rear console (see GR. 66).
2. Disconnect the handbrake lever from its support by unscrewing the bolt.

⇩

Replacing the air temperature regulation motor (Continued)

- Remove the right and left-hand trim from under the dashboard (see GR. 66).
- Remove the central gearbox console (see GR. 66).

1. Working from the passenger compartment, disconnect the shutter control rod from the air temperature regulation motor.
- Disconnect the electrical connection from the air temperature regulation motor.

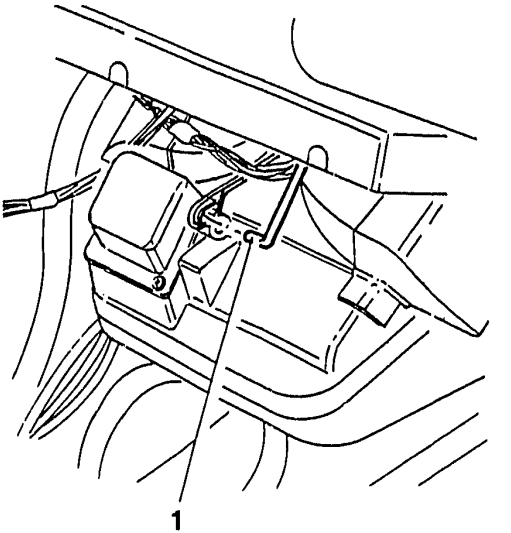

⇩

Replacing the air temperature regulation motor (Continued)

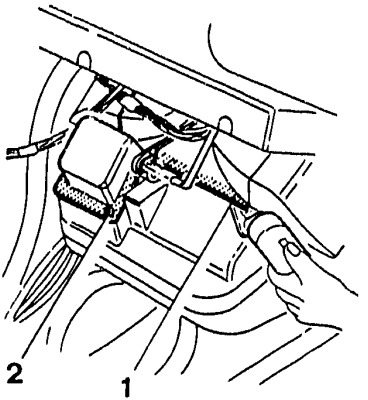

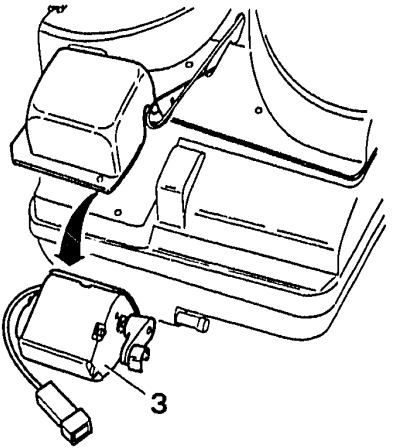

1. Using a suitable tool, cut away the sealant from the areas indicated in the illustration.
2. Loosen the screws securing the motor cover to the casing.
3. Raise the lower edge of the cover and withdraw the motor.

Refit by reversing the procedure followed for removal and:

- **cleam the plastic mating surfaces (originally sealed) with methylated spirits;**
- **apply silicone sealant evenly to both of the mating surfaces ensuring that there are no air bubbles.**

Replacing the external air - recirculation regulation motor

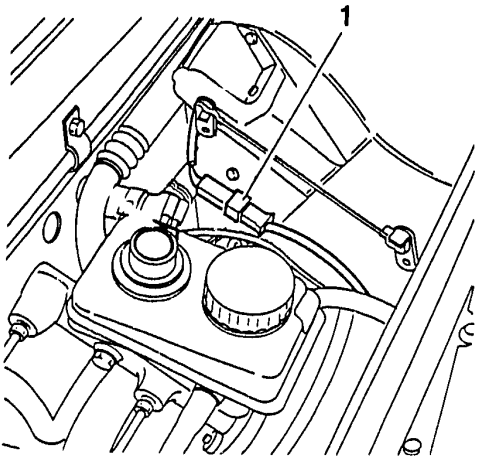

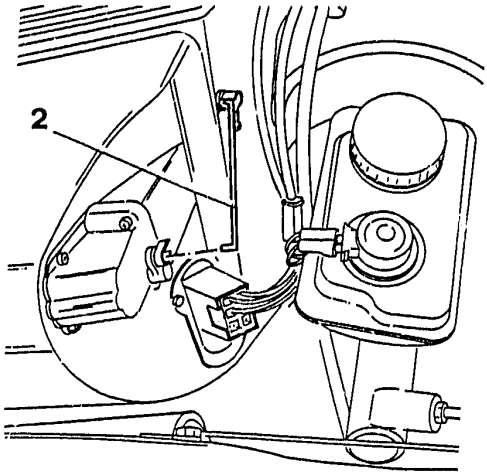

- Disconnect the negative cable from the battery.
1. Disconnect the external air - recirculation regulation motor power supply connection.
2. Disconnect the shutter control rod from the external air - recirculation motor.

Replacing the external air - recirculation regulation motor (Continued)

1. Loosen the screws securing the motor protection cover.
2. Using an appropriate tool, cut away the sealant from between the casing and the cover and after removing the cover, recover the motor.

Refit by reversing the procedure followed for removal and:
- **clean the plastic mating surfaces (originally sealed) with methylated spirits;**
- **apply silicone sealant evenly to both of the mating surfaces ensuring that there are no air bubbles.**

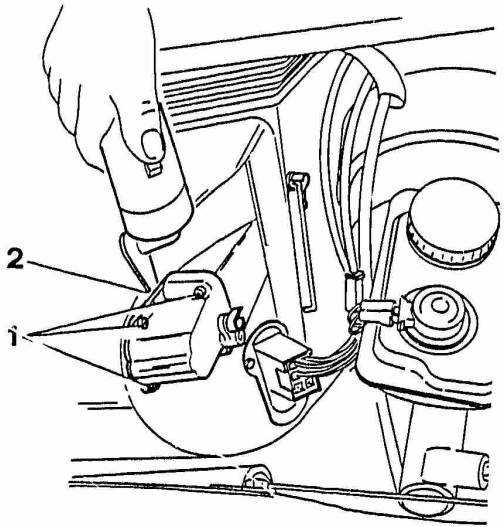

Replacing the water intercept motor

- Disconnect the negative cable from the battery.
1. Disconnect the water intercept motor power supply connection.
2. Remove the clamp and bend the water intercept unit forward.

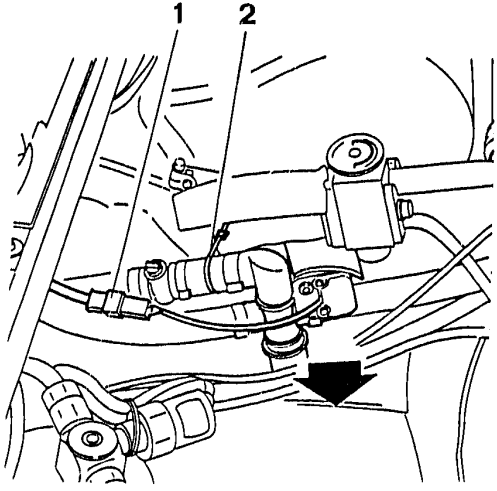

⇩

Replacing the water intercept motor (Continued)

1. Remove the clip.
2. Disconnect the control rod from the water intercept motor.
3. Loosen the three screws securing the motor to the bracket and remove the motor.

- Refit by reversing the procedure followed for removal.

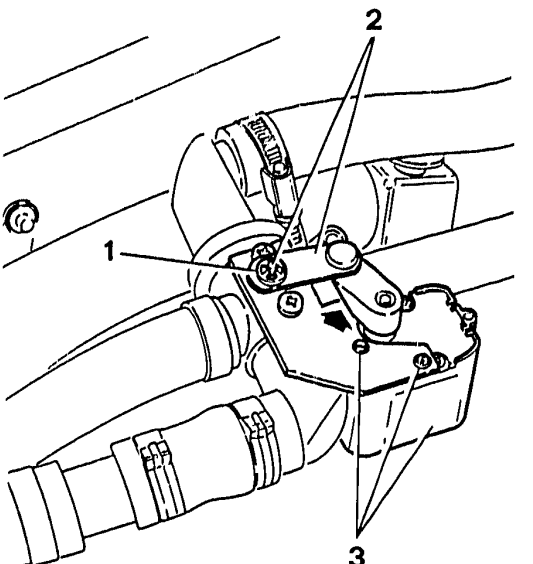

Replacing the water intercept valve

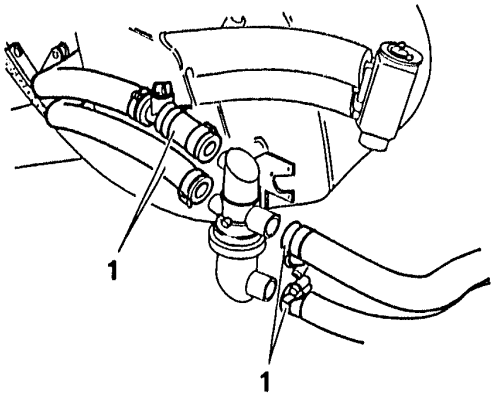

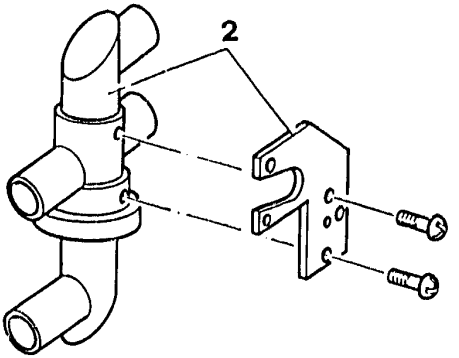

- Disconnect the negative cable from the battery.
- Drain off the engine coolant.
- Remove the water intercept motor (see 80-88).

1. Disconnect the water hoses from the valve and remove it together with the bracket.
2. Separate the valve and bracket.

- Refit by reversing the procedure followed for removal.

Replacing the expansion valve

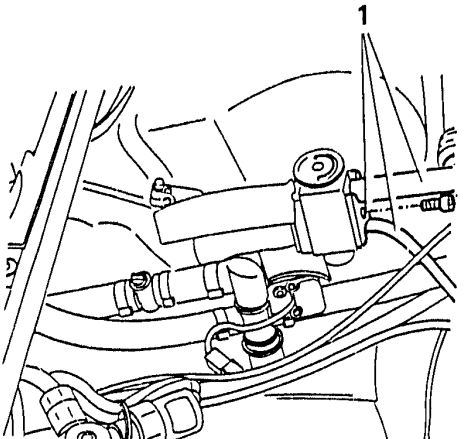

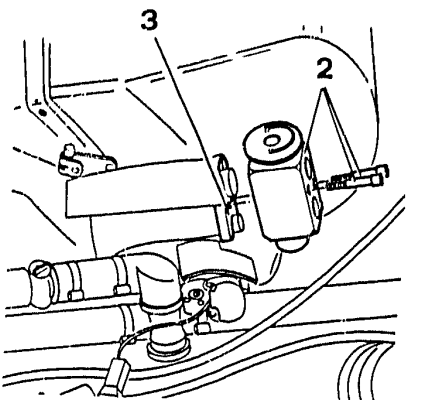

- Disconnect the negative cable from the battery.
- Drain off the air consitioning Freon in accordance with the current laws.

1. Remove the plate and disconnect the Freon hoses from the expansion valve.
2. Loosen the two screws and remove the expansion valve.
3. Remove the plate.

- Refit by reversing the procedure followed for removal.

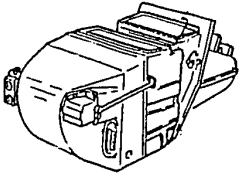

HEATING-VENTILATION (Postmodification) (continued)

HEATING-VENTILATION (Postmodification)

HEATER - EVAPORATOR
UNIT (continued) ..... 80 - 91
Replacing the frost sensor ..... 80 - 91
Replacing the thermostat ..... 80 - 92
COMPRESSOR ..... 80 - 93
Removal/refitting ..... 80 - 93
REFILLING WITH REFRIGERATING FLUID ..... 80 - 97
Warning ..... 80 - 97
System vacuum ..... 80 - 99

HEATING-VENTILATION (Postmodification)

HEATER - EVAPORATOR UNIT (continued)

Replacing the frost sensor

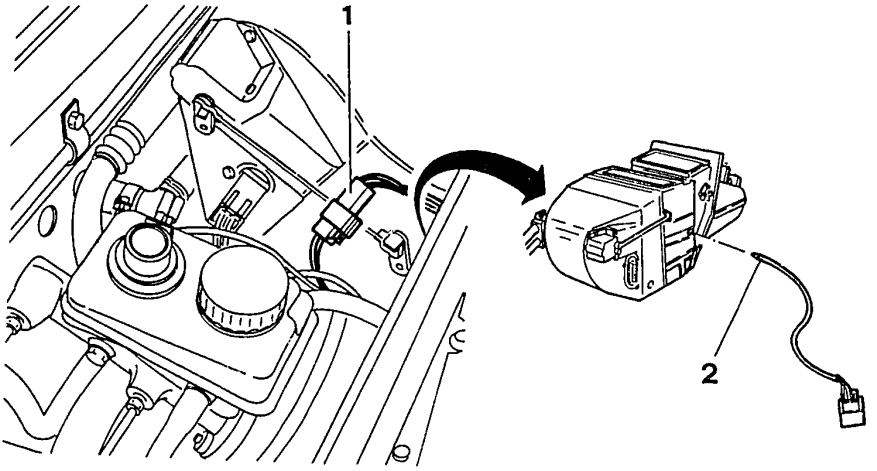

- Disconnect the negative cable from the battery.
1. Disconnect the connection from the frost sensor.
2. Withdraw the frost sensor from the evaporator.
- Refit by reversing the procedure followed for removal.

Replacing the thermostat

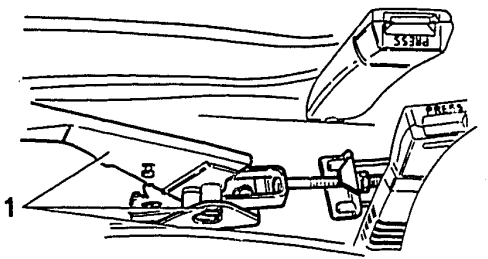

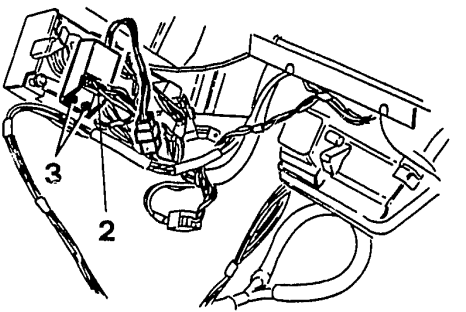

- Disconnect the negative cable from the battery.
- Remove the rear console (see GR. 66).

1. Disconnect the handbrake lever from its support by unscrewing the bolt.

- Remove the right and left-hand trim from under the dashboard (see GR. 66).
- Remove the gearbox central console (see GR. 66).

2. Disconnect the thermostat electrical connection.
3. Loosen the two nuts and rempve the thermostat from the support bracket.

Removal/Refitting

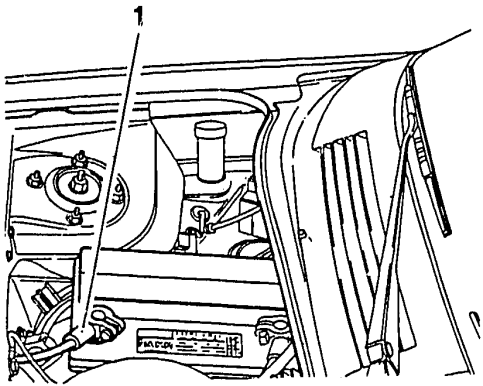

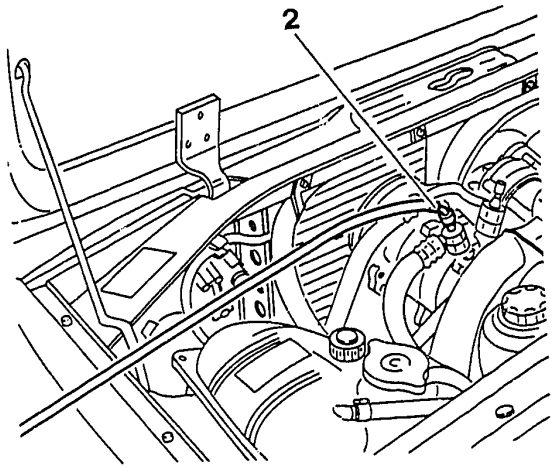

1. Disconnect the negative cable from the battery.

2. Drain the Freon from the low pressure valve (in accordance with current laws) by connecting the valve to a suitable drainage hose.

⇩

Removal/Refitting (Continued)

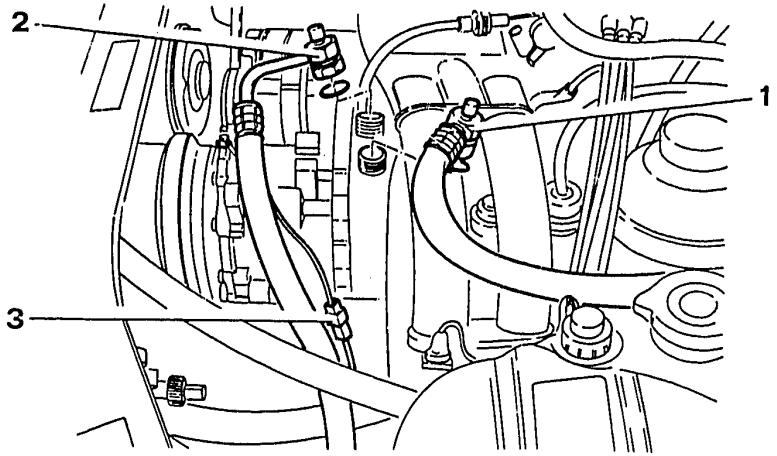

1. Disconnect the intake hose connection from the compressor.
2. Disconnect the delivery hose connection from the compressor.
3. Disconnect the electrical connection from the electromagnetic coupling supply cable.

Replace the O-rings when refitting the connections.

Removal/Refitting (Continued)

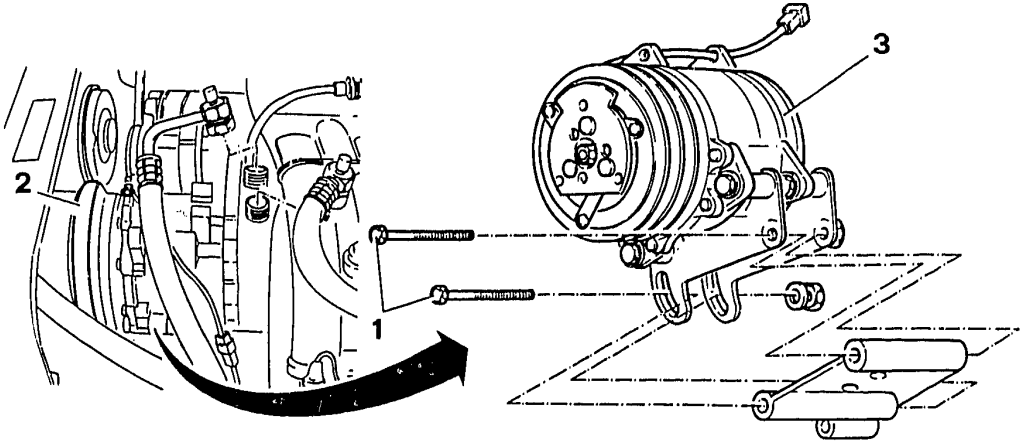

1. Loosen the screw and bolt securing the compressor.
2. Pull the drive belt off the compressor.
3. Completely unscrew the bolts, withdraw them and remove the compressor together with its support bracket.

Removal/Refitting (Continued)

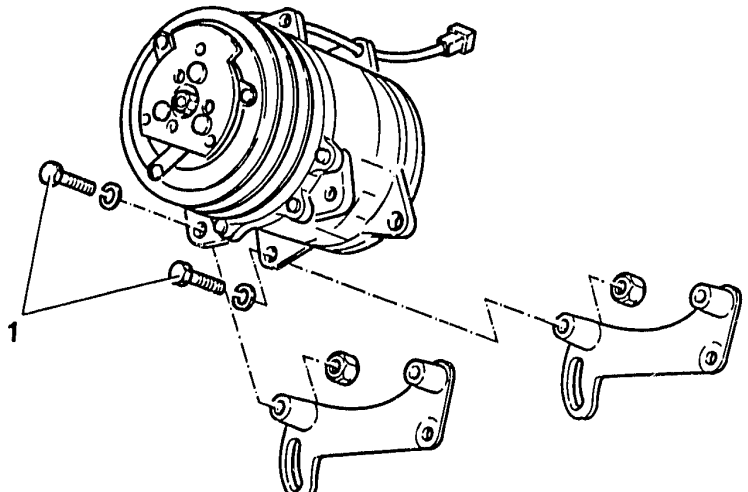

1. Loosen the bolts and separate the bracket and compressor.

- After refitting tension the drive belt (see GR. 00) and top-up the system (see **80-97**).

REFILLING WITH REFRIGERATING FLUID

Warning

- Freon is a fluid which is subject to physical transformation which can render it harmfull if not perfectly controlled. It is therefore necessary to follow the following indications.
- The refrigerant is normally stored in metal cylinders. Do not expose the cylinders to direct sunlight for long periods as the increase in temperature will cause an increase in the pressure within the cylinders which may exceed the limits of safety.
- During cold weather transferring the refrigerant from the cylinders to the loading station mayprove to be difficult due to the low pressure in the cylinder. In this case the cylinder shouls be left in a warm environment (the temperature shouls not however exceed 35°C) for about 20 minutes. Never use a naked flame to heat the cylinder.
  Never leave the loading station cylinder full for long periods.

REFILLING WITH REFRIGERATING FLUID (Continued)

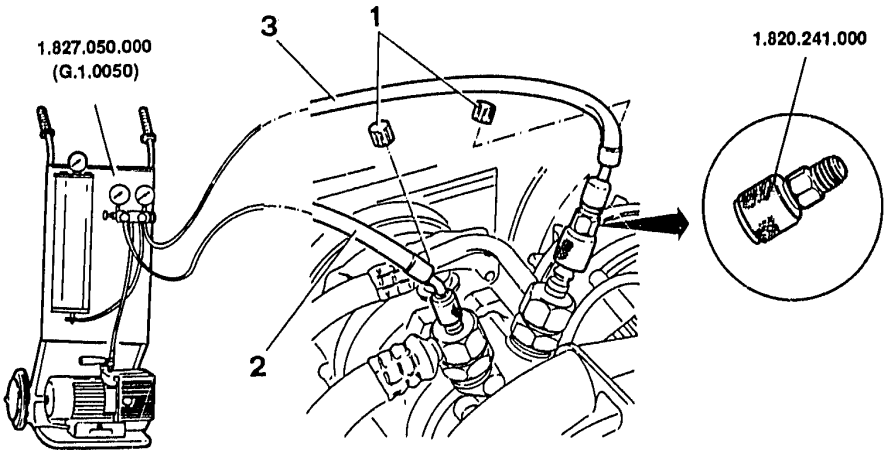

- To refill the system use station N° 1.827.050.000 (G.1.0050).

1. Unscrew and remove the valve caps on the high and low pressure hoses.
2. Connect the system vacuum hose to the valve on the low pressure hose.
3. Inserting reducing tool N° 1.820.241.000 connect the system refilling hose to the valve on the high pressure hose.

REFILLING WITH REFRIGERATING FLUID (Continued)

System vacuum

1. Close the loading cock and the cock on the cylinder.
2. Open the high and low pressure cocks.
3. Open the vacuum cock.
4. Start the electric motor of the station and check that the needle on the two pressure meters fall below zero.
- If the needles fall below zero there will be a leak somewhere in the system (to rectify this refer to the specific procedure).
- Maintain a vacuum for 40 minutes.
5. Switch off the electric motor.
- Close the low pressure cock.

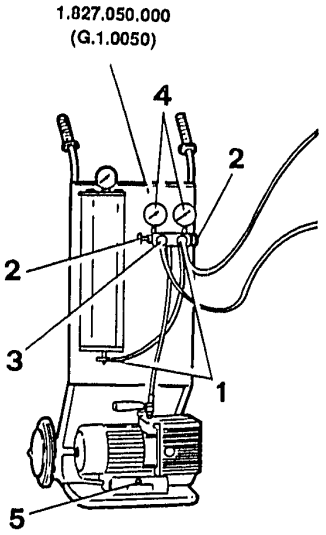

REFILLING WITH REFRIGERATION FLUID (Continued)

1. Open the loading cocks and the cock on the cylinder untill the system is filled to the specified level.

FREON 12	Quantity 950 ± 50 gr

If the specified quantity of Freon does not enter the circuit spontaneously, proceed as follows:
a. Close the high pressure cocck.
b. Start the motor.
c. Switch on the compressor.
d. Slowly open the low pressure cock until the specified quantity of Freon had been transferred from the cylinder to the vehicle's system.

- Close all the cocks and disconnect the hoses from the loading station and vehicle.

1.827.050.000
(G.1.0050)

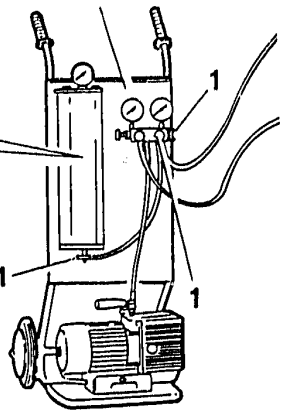

TSN

TECHNICAL SPECIFICATIONS AND NOTES

SPECIAL SERVICE TOOLS

TECHNICAL SPECIFICATIONS AND NOTES
FLUIDS AND LUBRICANTS ..... 80 - 101
TIGHTENING TORQUES ..... 80 - 102

SPECIAL SERVICE TOOLS ..... 80 - 103

TECHNICAL SPECIFICATIONS AND NOTES

FLUIDS AND LUBRICANTS

Application	Type	Name	Q.ty Kg
Refilling of air conditioning system	FREON	**RIVOIRA Freon 12**	**1.150**
Threads of air conditioning hose unions	OIL	**SUN OIL COMPANY Sunlso 46**	–

TECHNICAL SPECIFICATIONS AND NOTES (continued)

TIGHTENING TORQUES

Item \ Unit of measurement	Nm	Kgm
Freon inlet pipe to and oulet pipe from compressor unions	42	4.3
Unions of condenser connecting hose	22	2.2
Unions of Freon inlet pipe to LH condenser and outlet pipe from RH condenser	18	1.8
Dehydrating filter Freon inlet pipe union	18	1.8
Union joining dehydrating filter inlet pipe and expansion valve	18	1.8
Union joining dehydrating filter outler pipe and expansion valve	18	1.8
Unions of Freon outlet pipe from evaporator	28	2.8

SPECIAL SERVICE TOOLS

1.827.050.000 (G.10050)	Refrigerant refilling station	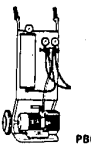 PB055N201
1.827.051.000 (G.10055)	Electronic leak detector for air conditioning system	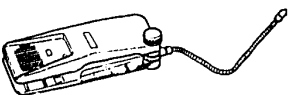 PB055N202
1.820.241.000	Reducer for recharging the refrigerating fluid	

MICROFICHE INDEX Groups: 04-15-17 (4x4 Permanent) 00-01-04-05 (IAW electronic injection engine)

Microfiche 14/15



Group 04 - Fuel supply system

EXHAUST SYSTEM ..... 04 - A



Group 15 - Transmission

WARNING, TRANSMISSION ..... 15 - B
DRIVE SHAFT, TCS,
SPECIFIC TOOLS ..... 15 - C



Group 17 - Differential and drive shafts

DRIVE HALF-SHAFTS, SPECIFIC TOOLS ..... 17 - D



Group 00 - Complete car

WARNING, VIEW OF ENGINE COMPARTMENT,
ENGINE MAINTENANCE ..... 00 - E



Group 01 - Engine complete unit

TCS ..... 01 - F



Group 04 - Fuel supply system

IAW IGNITION - INJECTION SYSTEM ..... 04 - G
IAW IGNITION - INJECTION SYSTEM (Continued) ..... 04 - H
IAW IGNITION - INJECTION SYSTEM (Continued),
FUEL SUPPLY SYSTEM ..... 04 - I
AIR SUPPLY SYSTEM ..... 04 - L
FUEL VAPOUR EMISSION CONTROL
SYSTEM ..... 04 - M
EXHAUST SYSTEM, ELECTRICAL AND ELECTRONIC
COMPONENTS ..... 04 - N



Group 05 - Starting, charging system

WARNING, IGNITION
COILS ..... 05 - O

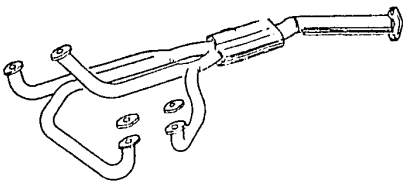

4x4 permanent

- WARNING
- EXHAUST SYSTEM

WARNING.....04 - 1
EXHAUST SYSTEM (for vehicles with catalytic converter)
ASSEMBLY.....04 - 2
EXHAUST SYSTEM (for vehicles without catalytic converter)
ASSEMBLY.....04 - 3

WARNING

THE DESCRIPTIONS, TECHNICAL CHARACTERISTICS AND ALL THE MAINTENANCE AND OVERHAUL OPERATIONS FOR THIS MODEL ARE GIVEN BELOW.
FOR ANY INDICATIONS NOT SPECIFIED, THE PROCEDURES RELATIVE TO THE 16 VALVE ELECTRONIC INJECTION MODELS ARE APPLICABLE EXCEPT FOR THOSE GIVEN IN MICROFICHES 1 AND 11.

EXHAUST SYSTEM (for vehicles with catalytic converter)

ASSEMBLY

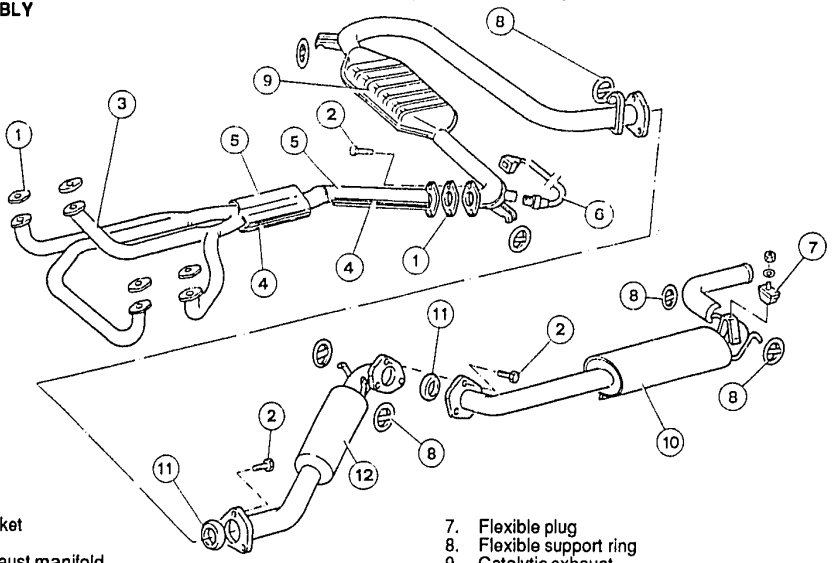

1. Gasket
2. Bolt
3. Exhaust manifold
4. Lower insulation
5. Upper insulation
6. Lambda probe
7. Flexible plug
8. Flexible support ring
9. Catalytic exhaust
10. Rear silencer
11. Seal ring
12. Central silencer

EXHAUST SYSTEM (for vehicles without catalytic converter)

ASSEMBLY

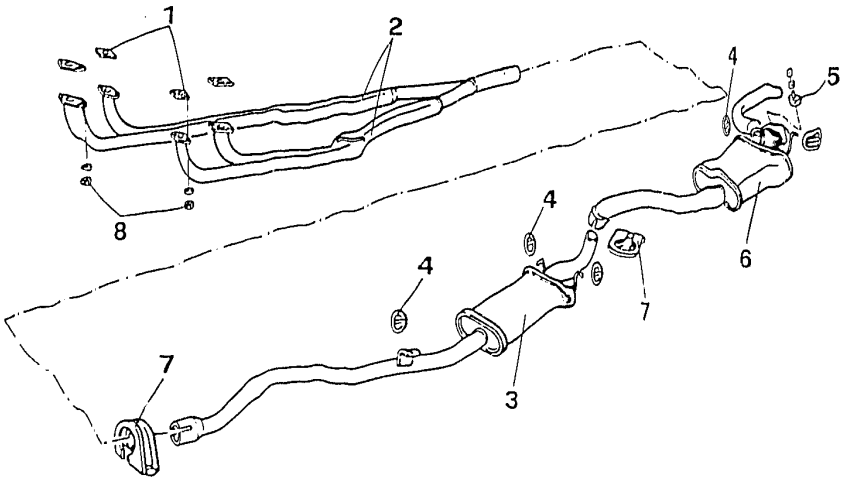

1 Gasket
2 Manifolds - front part
3 Silencer - central part
4 Rubber supporting ring
5 Buffer
6 Rear silencer
7 Clamp
8 Manifold-to-cylinder heads fixing nuts

4x4 Permanent

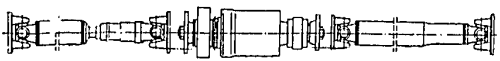

WARNING

TRASNSMISSION

WARNING ..... 15 - 1

TRANSMISSION

DESCRIPTION ..... 15 - 2
ELECTROMAGNETIC COUPLING ..... 15 - 5
Engagement/disengagement of the coupling ..... 15 - 7
Anti-disengaging function ..... 15 - 7
Self diagnosis ..... 15 - 8
SENSORS ..... 15 - 11
Speed sensor ..... 15 - 11
Anti-disengaging coil ..... 15 - 12
Stop switches ..... 15 - 12

WARNING

We would like to point out that the assistance operations given below
1) towing of a vehicle with two wheels raised
2) dynamic wheel balancing with wheel fitted on vehicle
3) measuring power and brake testing with a two-roller bench
must be carried out with the transmission between the front and rear axles disconnected i.e. with the four-wheel drive electromagnetic coupling disengaged.
With regard to points 1 and 2 in particular, the interventions must be carried out after the ignition key has been turned to position 1: key operated services excluded.
The intervention relative to point 3 must be carried out by disconnecting the 30A fuse from the four wheel drive power supply relay I76 located on the left hand side of the service tank and identified by a blue connector for the relay box.

TRANSMISSION
DESCRIPTION

The "33 PERMANENT 4" is a permanent four-wheel drive vehicle employing evolved technical solutions characterized by a series of devices able to permit optimal traction even under critical road holding conditions.
These results have been obtained by the adoption of a central viscous coupling able to permit the transfer of part of the deflecting torque from one drive shaft to another whenever the wheels begin to slip due to bad road holding conditions.
When road holding is good the rear axle contributes to the thrust with a small torque (about 5%) transferred by the viscous coupling (in the same way as a differential device) which permits small differences in speed between the front and rear wheels.

DESCRIPTION (continued)

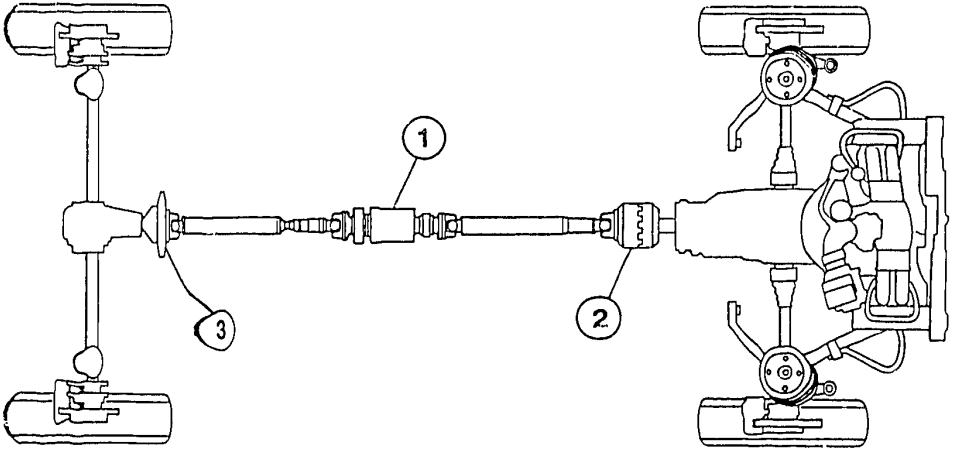

Movement is transmitted to the viscous coupling **1** by an electromagnetic coupling **2** (controlled by the electronic control unit) which automatically disengages/engages it in accordance with the parameters set by the control unit which employs various sensors and components (illustrated in specific chapters) for this function. A fly mass **3** located at the rear end of the drive shaft absorbs the vibrations generated by the unbalance of the system.

⇩

DESCRIPTION (continued)

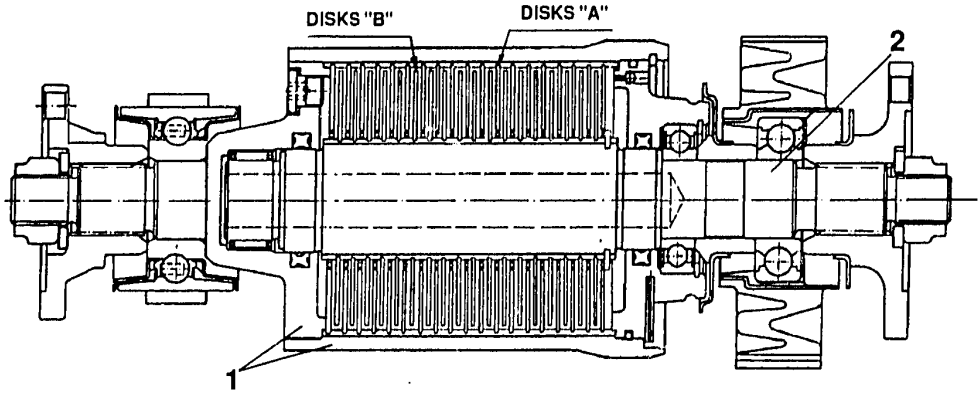

As shown in figure , the connection between the two drive shafts (front/rear) employs a special silicone fluid into which discs "A" and "B" are immersed. These disks form a single unit (by a grooved coupling) with casing **1** and shaft **2**.
Under normal conditions as described above when the speed difference between the two discs is minimal there is a minimal torque transfer as the traction is conferred almost entirely by the front axle.
When one of the drive shafts slips and there is a high difference in the relative rotation between the two discs (e.g. front wheels on ice and rear wheels on a dry surface) there is a temperature increase and a consequent compression of the discs and the relative locking of the coupling.

ELECTROMAGNETIC COUPLING

The only actuator in the system is the front-toothed electromagnetic coupling which is engaged by a solenoid supplied by the control unit with a 12 V square wave signal which reduces the power dissipation during the control phase.

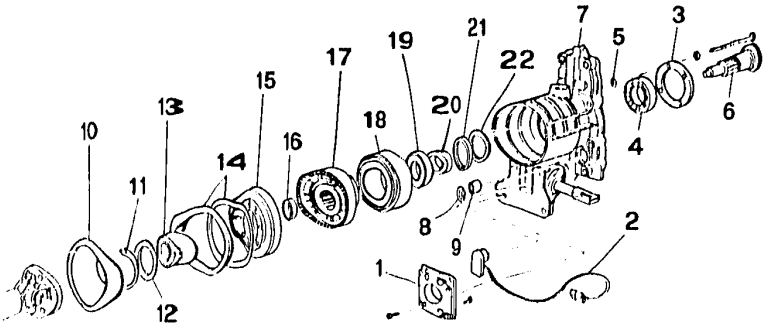

1. Flexible support
2. Anti-disengaging coil
3. Bearing stop limit flange
4. Ball bearing
5. O-ring
6. Power take-off shaft
7. Coupling body
8. Seal ring
9. Gear lever bearing
10. Dust ring
11. Flexible ring
12. Shim ring
13. Bearing
14. Flexible clamp
15. Fixed part of coupling
16. Mobile part of coupling
17. Bushing
18. Solenoid
19. Bearing
20. Spacer
21. Oil seal ring
22. Anti-slam washer

ELECTROMAGNETIC COUPLING (continued)

The electromagnetic coupling forms part of a sophisticated control system managed by a specific control unit which by elaborating the data measured by a series of sensors, controls traction on the basis of the best road holding conditions available (i.e. condition of normal operation) through the disengagement of the four-wheel drive.

The functions of the system are basically as follows:
- engagement/disengagenent of the coupling
- anti-disengaging function
- self diagnosis

The diagram given below shows the described functions.

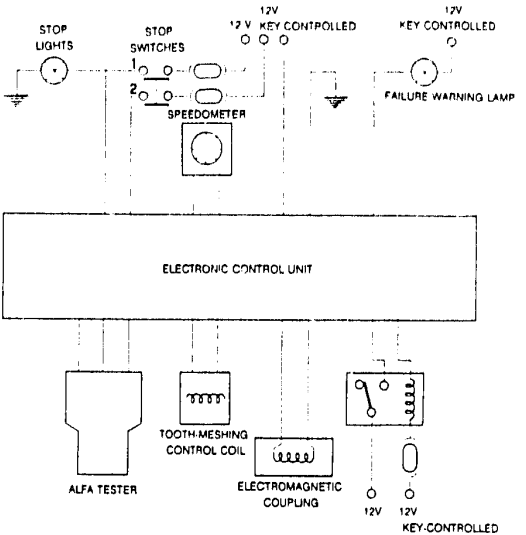

ELECTROMAGNETIC COUPLING (continued)

Engagement/disengagement of the coupling

The electromagnetic coupling is permanently engaged but the system has a braking safety function which ensures that traction is automatically disengaged when, after having obtained the consensus from the stop-light switches, deceleration exceeds 0.2g.
Traction is again engaged automatically 0.01 seconds after the brake pedal has been released.
For obvious reasons of compatibility with the ABS system the control relative to deceleration is not carried out at speeds less than 50 kph.

Anti-disengaging function

The engagement of the coupling, even though facilitated by the shape of the frontal parts of the two gears always presents a certain difficulty when the difference in angular speed of the two gears is high.
To avoid the possibility of frontal shocks resulting in the disengagement of the system there is a function which, by way of a coil located next to the coupling, prevents engagement.
The coil functions on the basis of the electromagnetic disturbances caused by the relative movement between the two gears of the coupling.
The control unit, on the basis of the signal from the coil, prevents the engagement if 0.1 seconds after the engagement signal the difference in the angular velocity between the two gears exceeds the angle corresponding to 8 teeth.
The attempt to engage is repeated every 0.3 seconds up to a total of 32 attempts.
If after this the coupling has not engaged, the system enters into the malfunction function and signals the anomalous condition on the instrument panel.
This control is not carried out at speeds above 150 k.p.h. as the difference in angular speed under these conditions is not hazardous and in any case the viscous coupling is able to absorb the differences in speed between the traction axles.

ELECTROMAGNETIC COUPLING (continued)

Self diagnosis

The electronic control unit is equipped with a system of self diagnosis and it is possible for it, by way of a special connector, to be connected to the Alfa Tester in order to detect any anomalies.
The malfunctions which can be detected are:

a - *Absence of the speedometer signal*

In order to guarantee compatibility with the ABS system, if the speedometer signal does not reach the control unit within 120 seconds the four wheel drive disengages when the brake pedal is depressed independently from the degree of deceleration.
After about 0.4 seconds from the moment in which the brake pedal is released the four wheel drive engages once again.
The absence of the speedometer signal does not provoke the ignition of the warning lamp otherwise this would come on each time the vehicle stops.
Thus, when the vehicle is stationary and after 120 seconds, each time the brake pedal is depressed the four wheel drive is disengaged and is then re-engaged when the brake pedal is released.

ELECTROMAGNETIC COUPLING

Self diagnosis (continued)

b - *Absence of the stop signal*

Two switches are installed on the brake pedal in order to guarantee a double checking of the command.
If, when the vehicle is moving, the electronic control unit detects a difference between the two stop signals for a braking time of above 36 seconds (also counted at intervals as long as in cycles of less than 4 seconds) the malfunction warning lamp will come on.
If during the diagnosis phase the symmetry of the two stop sensors is restored the anomalous braking function is reset and the system is set for another control.

c - *Anti-disengaging coil interrupted*

The coil is continuously controlled by the control unit except during the engagement phase.
If the interruption is detected the malfunction warning lamp comes on and the power supply to the coupling control is interrupted and by way of a counter spring the coupling disengages automatically.
The short-circuiting of the coil cannot be detected directly but the circuit open condition is detected.

d - *Short-circuited or interrupted coupling coil*

The coil is continuously controlled and in the event of a malfunction the relative warning light comes on and the power supply to the supply part is interrupted.

ELECTROMAGNETIC COUPLING

Self diagnosis (continued)

The control unit is also able to check the operation of the following system components:

- safety relay
- malfunction warning lamp
- error stop
- insufficient battery voltage

and the following system states and parameters:

- stop 1 pressed
- stop 2 pressed
- safety relay engaged
- presence of disengaging
- coupling engaged
- speed of vehicle

Consequently it will be possible to check the system using the Alfa Tester.

SENSORS

the sensors included in the system are:
- speed sensor
- anti-disengaging coil
- stop switches

A brief outline of their characteristics follows.

Speed sensor

The system uses the speedometer sensor as a speed sensor and the signal is taken from the instrument panel.

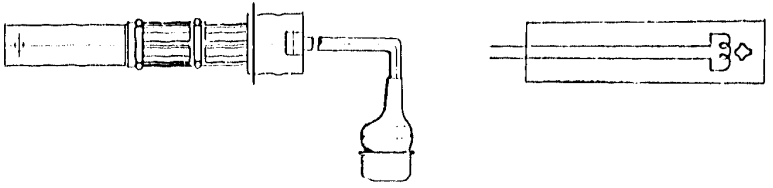

SENSORS (continued)

Anti-disengaging coil

The coil is located inside a plastic container which enables it to be fixed to the inside of a seating on the body of the coupling.



Stop switches

The two stop switches activated by the brake pedal are mechanically separated but synchronized in their operation and need to be aligned with great accuracy.

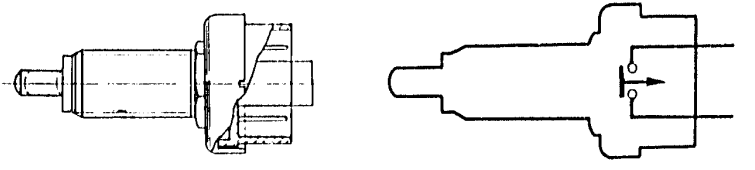

4x4 Permanent

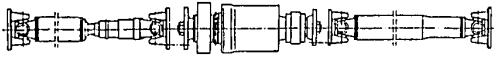

DRIVE SHAFT

TECHNICAL CHARACTERISTICS AND SPECIFICATIONS

SPECIFIC TOOLS

DRIVE SHAFT
REMOVAL - REFITTING ..... 15 - 13
DISASSEMBLY - REASSEMBLY ..... 15 - 18
Disassembling the viscous coupling ..... 15 - 19
Refitting the viscous coupling ..... 15 - 24

TECHNICAL CHARACTERISTICS AND SPECIFICATIONS
TIGHTENING TORQUES ..... 15 - 25

SPECIFIC TOOLS ..... 15 - 26

DRIVE SHAFT
REMOVAL - REFITTING

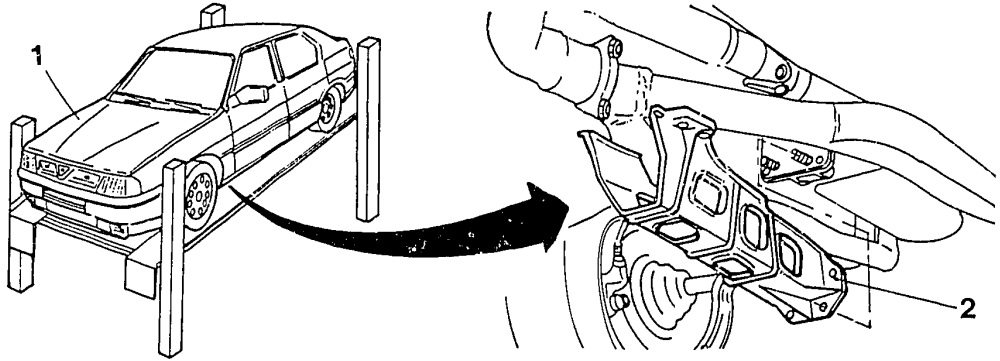

1. Place the vehicle on a lift

2. Remove the gear lever support.

⇩

REMOVAL - REFITTING (continued)

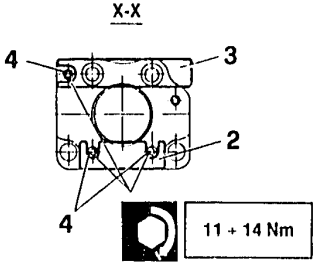

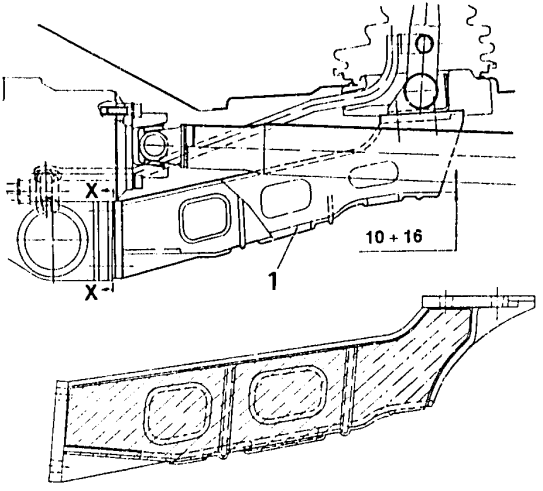

1. Remove the gear lever support (for 4x4 versions).
- When refitting the gear control lever it is necessary to check that it is the correct distance away from the drive shaft.

If it is not it is possible to operate as follows:

- Raise the vehicle.
- Check the distance between the support and the drive shaft.
- If the values is above 16 mm it will be necessary to insert one or more shims (2) under the lower nuts.
- If the value is below 10 mm it will be necessary to insert one or more shims (3) under the upper nut.
- Tighten the nuts (4) to the correct torque.

N.B. Each 0.5 mm shim will vary the value by ~ 3.5 mm.

NOTE: Starting from chassis number 5822286, an off-loaded gear lever support has been fitted and the distance from the drive shaft need not be checked.

⇩

REMOVAL - REFITTING (continued)

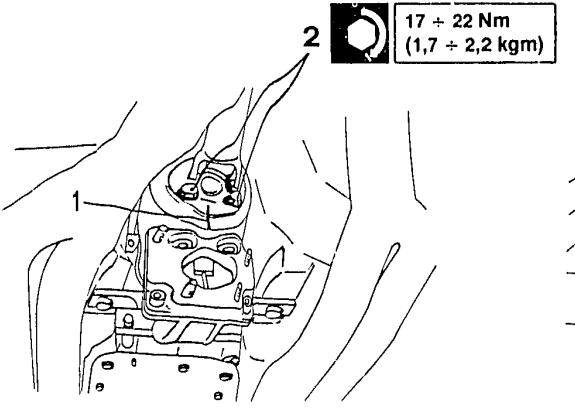

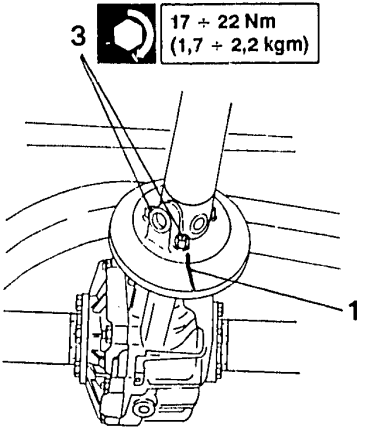

1. Mark the front and rear flanges on the drive shaft coupling to ensure that they are re-installed correctly.
2. Loosen the four screws securing the front flange.
3. Loosen the four screws securing the rear flange to the flywheel.

⇩

REMOVAL - REFITTING (continued)

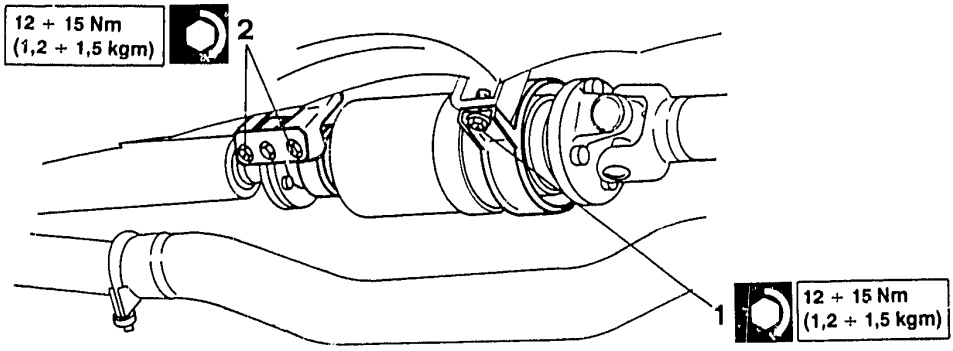

1. Loosen the two screws securing the rear flexible support to the viscous coupling.
2. Loosen the four screws securing the viscous coupling front support and remove the entire drive shaft.

⇩

REMOVAL - REFITTING (continued)

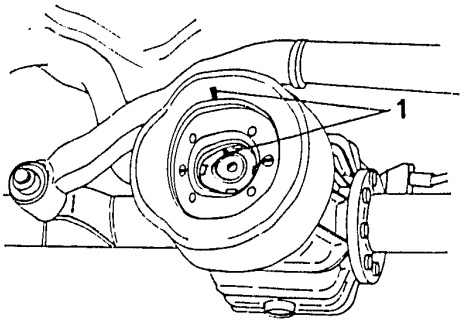

1. Notch the flywheel to ensure that it is refitted correctly.

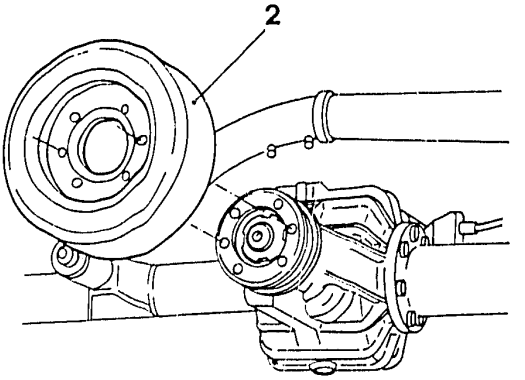

2. Loosen the two screws and remove the flywheel.

DISASSEMBLY - REASSEMBLY

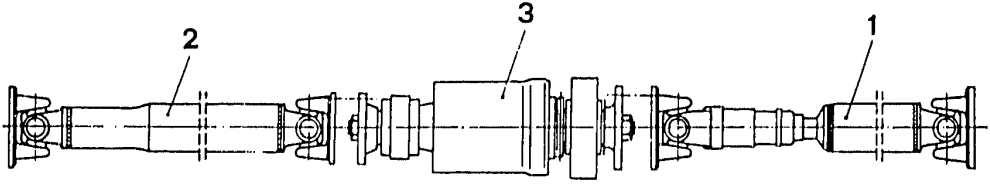

1. Disassemble the drive shaft and separate the rear sliding shaft (1), front shaft (2),and viscous coupling (3) by unscrewing the bolts on the two flanges of the attachment.

DISASSEMBLY - REASSEMBLY (continued)
Disassembling the viscous coupling.

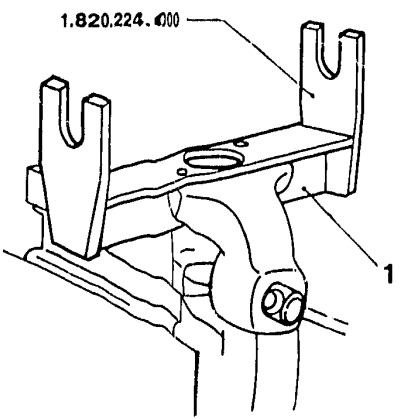

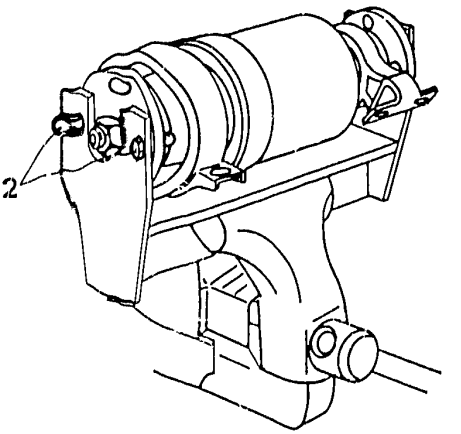

1. Fit tool N° 1.820.224.000 in a vice.

2. Position the viscous coupling on the support tool and fix it using two bolts per side.

DISASSEMBLY - REASSEMBLY

Disassembling the viscous coupling (continued)

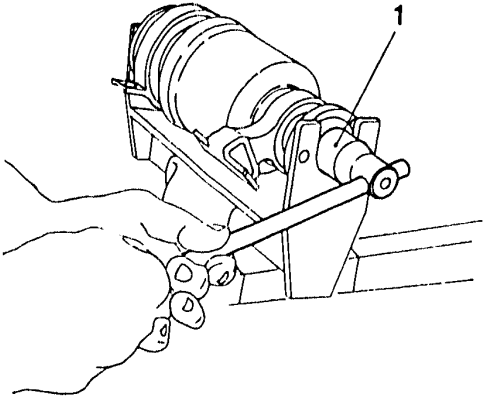

1. Loosen the packing nut of the front flange.

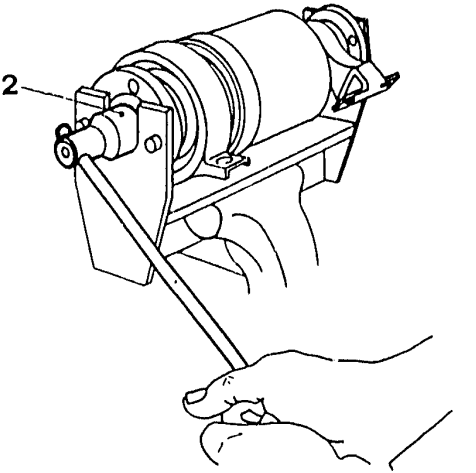

2. Loosen the packing nut of the rear flange.



DISASSEMBLY - REASSEMBLY

Disassembling the viscous coupling (continued)

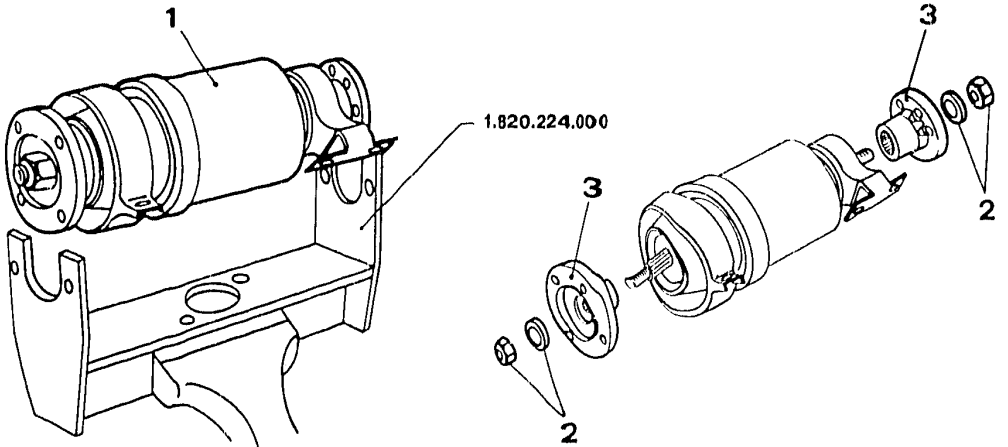

1. Remove the viscous coupling from the support tool N° 1.820.224.000.
2. Remove the two nuts and washers loosened previously.
3. Remove the two flanges.

DISASSEMBLY - REASSEMBLY

Disassembling the viscous coupling (continued)

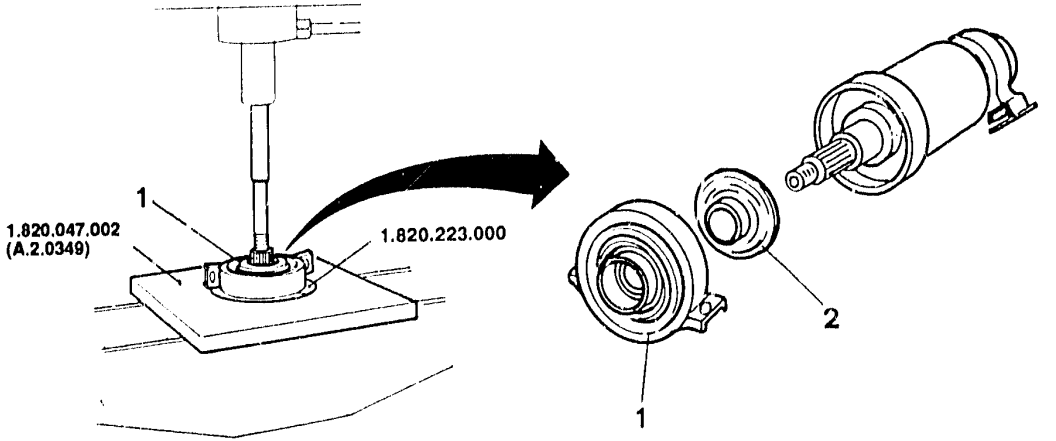

1. In a press using the resting plate N° 1.820.047.002 (A.2.0349), halfplates N° 1.820.223.000 and a suitable punch (of bronze or aluminium), remove the rear flexible support.
2. Remove the spacer.

DISASSEMBLY - REASSEMBLY

Disassembling the viscous coupling (continued)

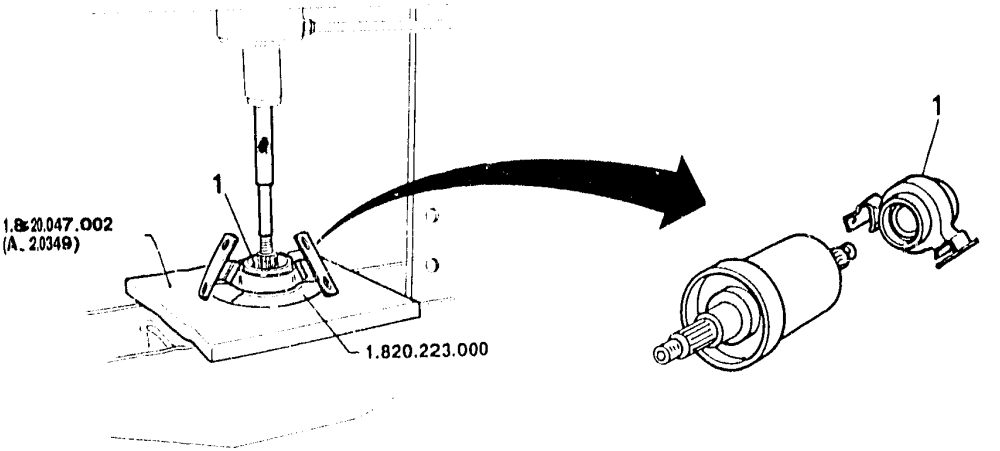

1. In a press using the resting plate N° 1.820.047.002 (A.2.0349), halfplates N° 1.820.223.000 and a suitable punch (of bronze or aluminium), remove the front flexible support.

DISASSEMBLY - REASSEMBLY (continued)

Refitting the viscous coupling

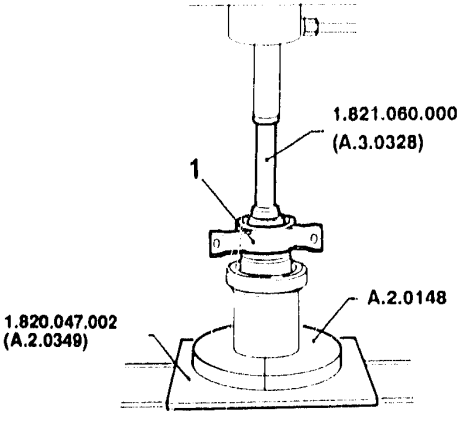

- Refit the viscous coupling by operating as described for disassembly and note the following warnings.

1. In a press using resting plate N° 1.820.047.002 (A.2.0349), halfplates N° A.2.0148 and punch N° 1.821.060.000 (A.3.0328), insert the spacer and the rear flexible support.

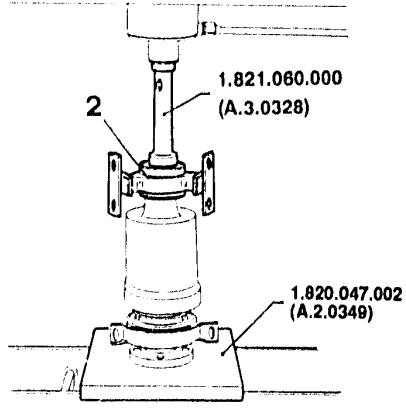

2. In a press using the resting plate N° 1.820.047.002 (A.2.0349) and the punch N° 1.821.060.000 (A.3.0328), insert the front flexible support.

Use the rear flange as a resting surface for the viscous coupling.

TECHNICAL CHARACTERISTICS AND SPECIFICATIONS
TIGHTENING TORQUES

ITEM \ UNIT	Nm	kgm
Drive shaft anterior flange to electromagnetic coupling fixing schrews	17 ÷ 22	1.7 ÷ 2.2
Drive shaft posterior flange to flywheel fixing screws	17 ÷ 22	1.7 ÷ 2.2
Semifluid coupling elastic supports to underbody fixing screws	12 ÷ 15	1.2 ÷ 1.5

SPECIFIC TOOLS

1.820.224.000	Support for viscous coupling and axle shaft	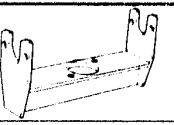
1.820.047.002 (A.2.0349)	Plate for the extraction of the elastic supports	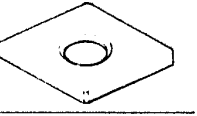
1.820.223.000	Half plates for removing viscous coupling flexible supports	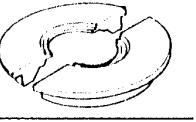
A.2.0148	Half plates for the introduction of the elastic supports	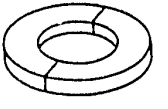
1.821.060.000 (A.3.0328)	Punch for the introduction of the elastic supports	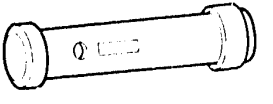

4x4 Permanent

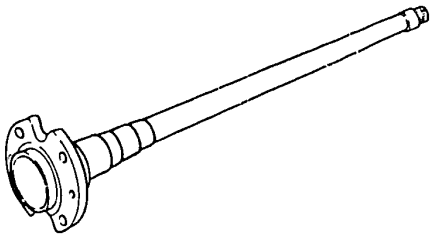

DRIVE HALF-SHAFTS

SPECIFIC TOOLS

DRIVE HALF-SHAFTS
ASSEMBLY ..... 17 - 1
REMOVAL - REFITTING ..... 17 - 2
DISASSEMBLY ..... 17 - 6
REASSEMBLY ..... 17 - 9
SPECIFIC TOOLS ..... 17 - 12

DRIVE HALF-SHAFTS
ASSEMBLY

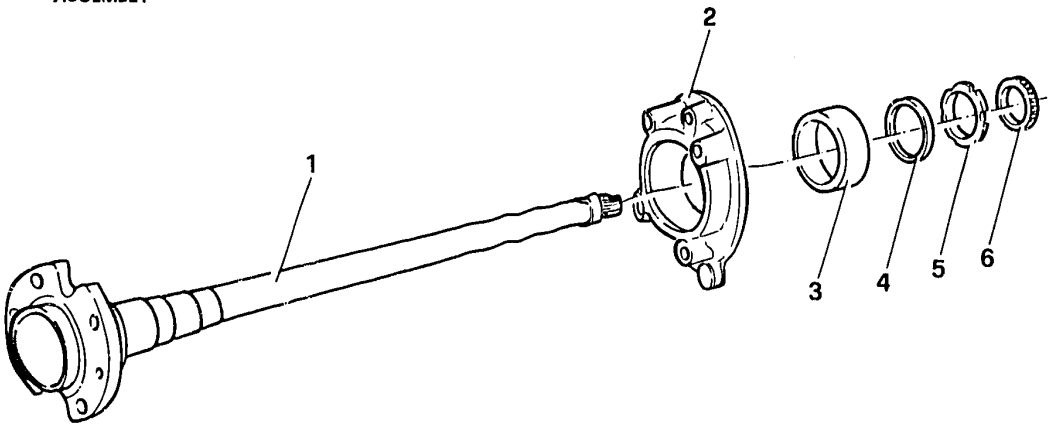

1. Drive shaft
2. Hub support
3. Bearing
4. Spacer
5. Ring nut
6. Phonic wheel

REMOVAL - REFITTING

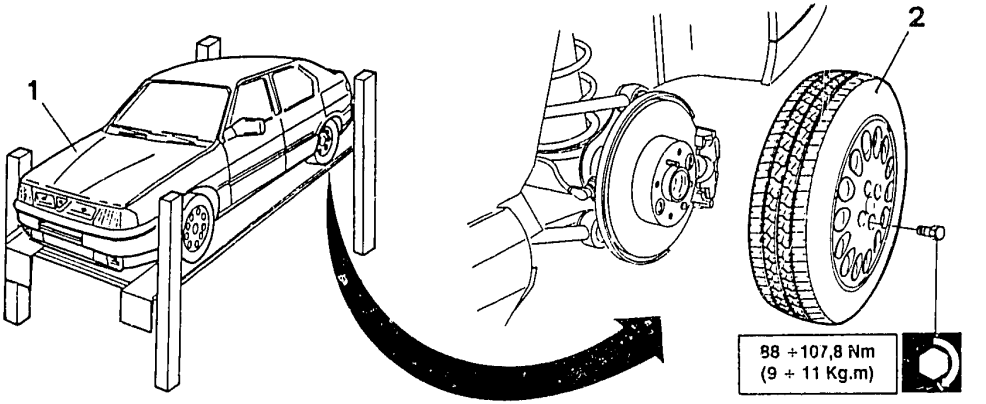

1. Place the vehicle on a lift.

2. Remove the rear wheel.

REMOVAL - REFITTING (continued)

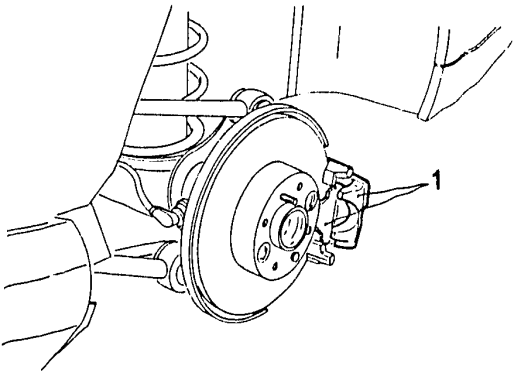

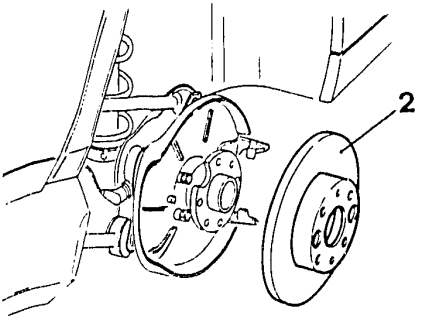

1. Remove the brake calipers and recover the relative pads.
2. Remove the brake disk.

REMOVAL - REFITTING (continued)

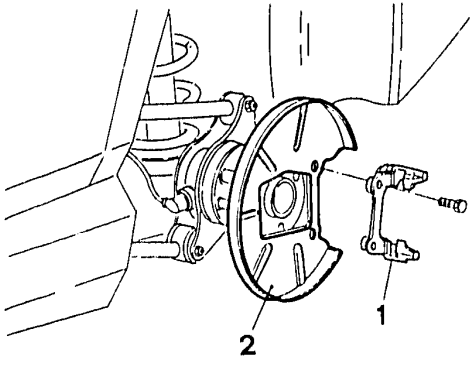

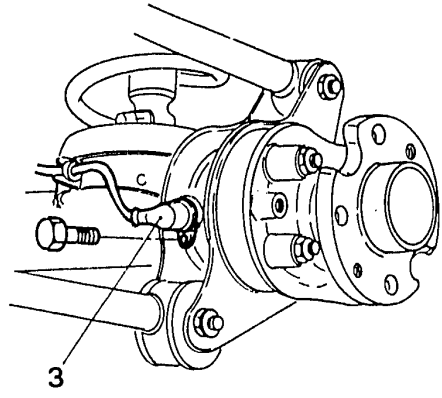

1. Remove the brake caliper support.
2. Remove the brake disk cover.
3. Remove the ABS sensor.

⇩

REMOVAL - REFITTING (continued)

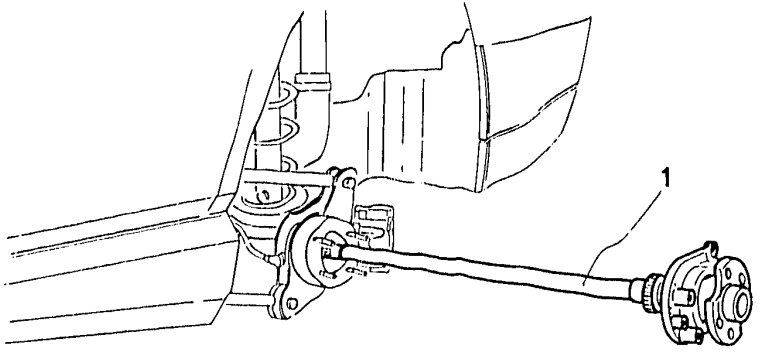

1. Loosen the four nuts and remove the drive half-shaft from the trumpet.

When removing the drive half-shaft avoid damaging the oil seal ring located in the trumpet.

DISASSEMBLY

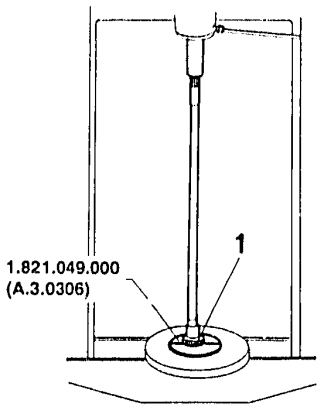

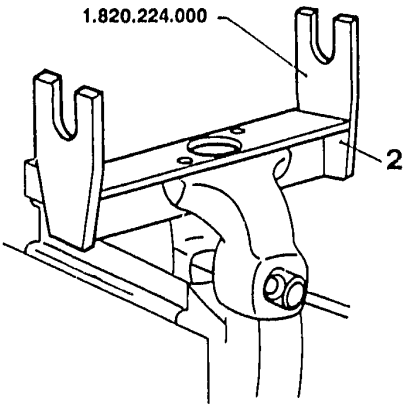

1. Using a press, halfplates N° 1.821.049.000 (A.3.0306) and a suitable punch, remove the phonic wheel.

2. Fit tool N° 1.820.224.000 in a vice.

DISASSEMBLY (continued)

1. Install the drive half-shaft on the support tool and secure it with the bolts.
2. Unscrew the ring nut using tool N° 1.822.003.000 (A.5.0120).
3. Remove the spacer.

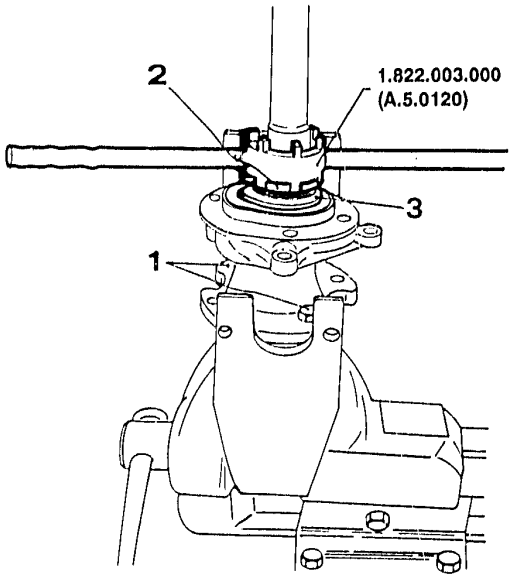

DISASSEMBLY (continued)

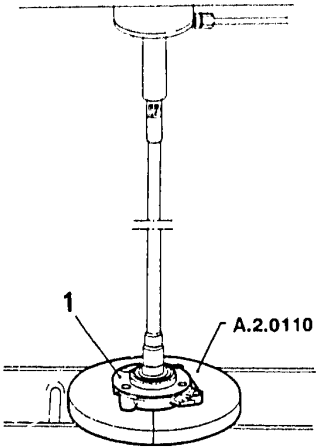

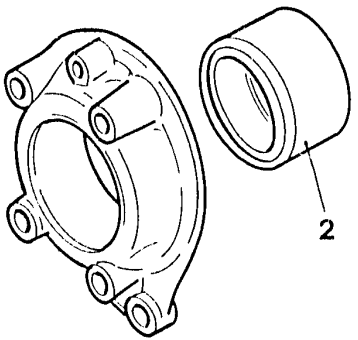

1. Using a press and halfplate number N° A.2.0110, remove the hub support from the drive half-shaft.
2. Remove the bearing from the hub support.

REASSEMBLY

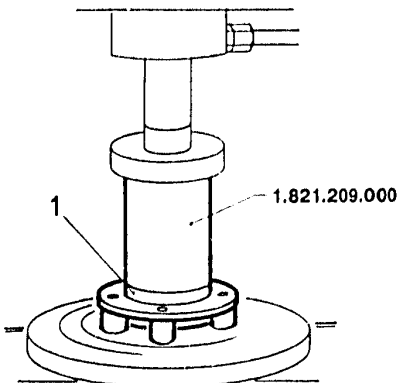

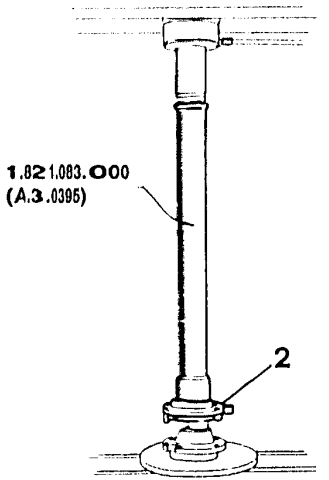

1. Using a press and inserting tool N° 1.821.209.000, install the bearing on the hub support.

2. Using a press and tool number N° 1.821.083.000 (A.3.0395), install the hub suppport onto the drive half-shaft.

REASSEMBLY (continued)

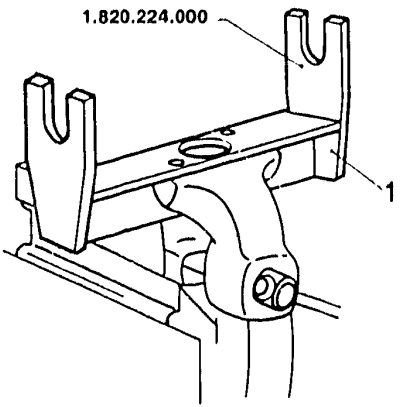

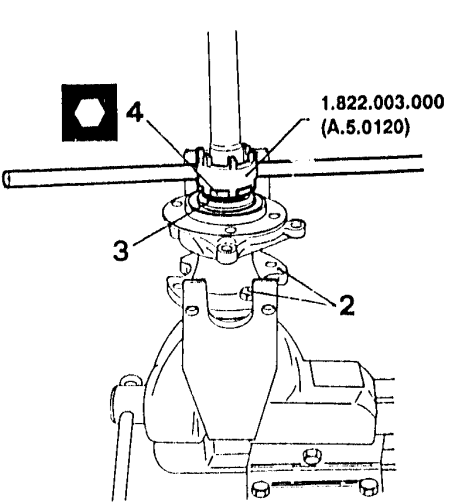

1. Install tool number N° 1.820.224.000 in a vice.
2. Install the drive half-shaft on the support tool using the two bolts.
3. Install the spacer.
4. Using tool N° 1.822.003.000 (A.5.0120) install the ring nut and caulk it.

REASSEMBLY (continued)

1. Using a press and tool N° 1.821.083.000 (A.3.0395), install the phonic wheel.

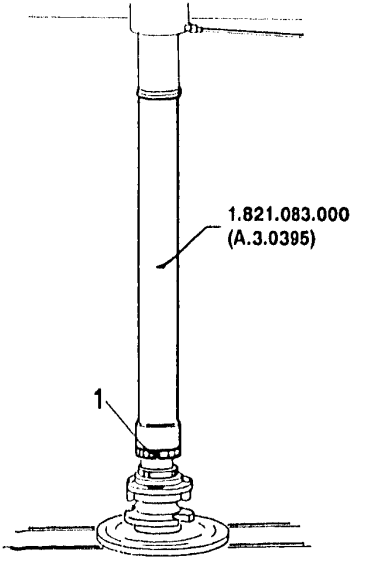

SPECIFIC TOOLS

1.821.049.000 (A.3.0306)	Half plates for the extraction of the phonic wheel	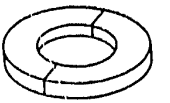
1.820.224.000	Axle shaft support tool	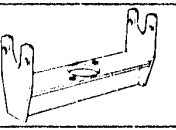
1.822.003.000 (A.5.0120)	Key for the cushion pad plug on axle shaft	
A.2.0110	Half plates for the removal of the hub support	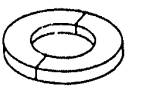

⇩

SPECIFIC TOOLS (continued)

1.821.209.000	Hub support bearing inserting tool	
1.821.083.000 (A.3.0395)	Hub support on drive shaft inserting tool	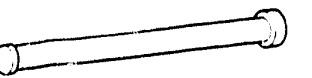

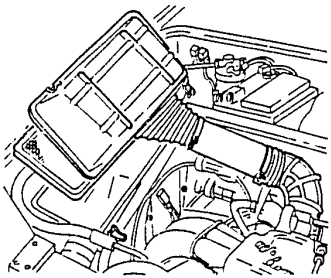

IAW ELECTRONIC INJECTION ENGINE

WARNING

VIEW OF ENGINE COMPARTMENT

ENGINE MAINTENANCE

WARNING ..... 00 - 1
VIEW OF ENGINE COMPARTMENT ..... 00 - 2
ENGINE MAINTENANCE
REPLACING ENGINE OIL AND FILTER ..... 00 - 3
CHECKING AND REPLACING THE AIR CLEANER CARTRIDGE ..... 00 - 5
CHECKING THE FUEL SUPPLY PRESSURE ..... 00 - 6
CHECKING EXHAUST EMISSIONS ..... 00 - 7

WARNING

THE DESCRIPTIONS, TECHNICAL CHARACTERISTICS AND ALL THE MAINTENANCE AND OVERHAUL OPERATIONS SPECIFIC TO THIS MODEL ARE GIVEN BELOW.
FOR ANY INFORMATION NOT GIVEN THE PROCEDURES RELATIVE TO THE ELECTRONIC INJECTION MODELS (JETRONIC) ARE APPLIC \BLE EXCEPT FOR THOSE GIVEN IN MICROFICHES 1 AND 11.

VIEW OF ENGINE COMPARTMENT

1. Heating-ventilation system hoses
2. Air cleaner cover
3. Oil dipstick
4. Oil vapour breather hose
5. Connector for lambda probe
6. Power steering fluid reservoir
7. Oil vapour separator
8. Idle speed actuator
9. Electroinjector
10. Secondary relay (injection)
11. Main relay (injection)
12. R.P.M. and timing sensor connector
13. Connector for ALFA TESTER
14. Throttle valve potentiometer
15. Fuse for injection system
16. Electronic control unit
17. Absolute pressure sensor
18. Ignition coil
19. Pressure regulator
20. Impulse dashpot
21. Air temperature sensor

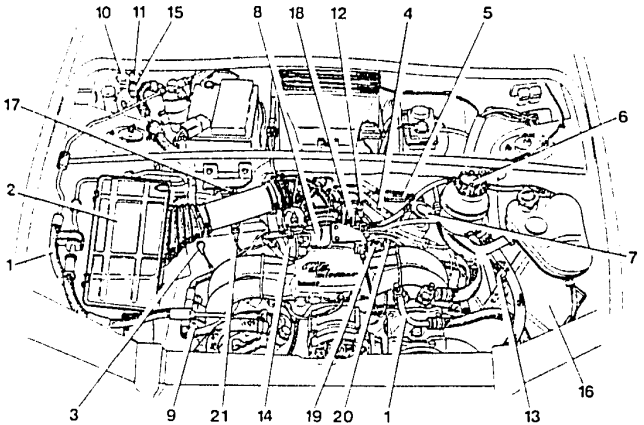

ENGINE MAINTENANCE

REPLACING ENGINE OIL AND FILTER

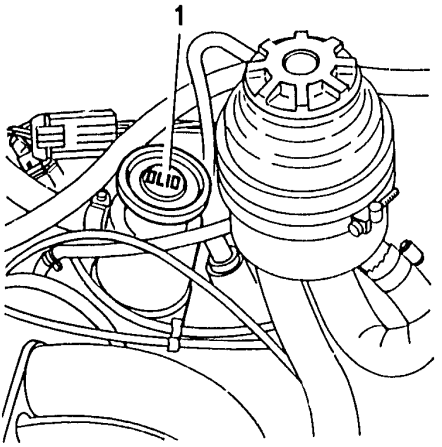

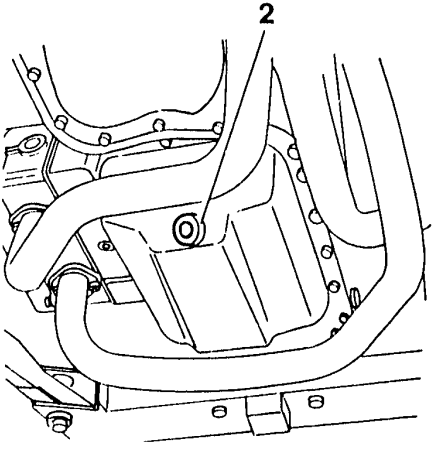

- Place the vehicle on a lift.

1. When the engine is warm remove the oil cap.

2. Unscrew the cap from the oil sump and let the oil drain off into a suitable container for at least 15 minutes.

⇩

REPLACING ENGINE OIL AND FILTER (continued)

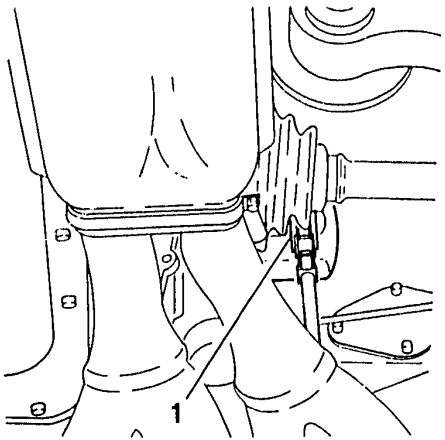

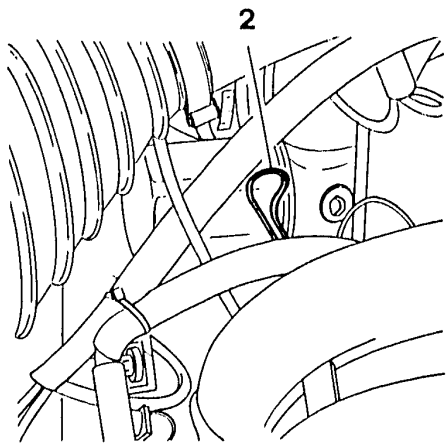

1. Raise the vehicle and remove the oil filter using an appropriate spanner.
- Clean the oil sump cap and screw it back on.
- Wet the gasket of the new filter and screw it on by hand.
- Refill the engine with the specified type and quantity of oil.
2. Check the oil level using the dipstick.

CHECKING AND REPLACING THE AIR CLEANER CARTRIDGE

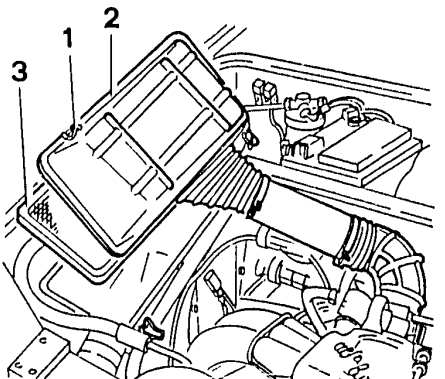

1. Unhook the clips securing the cover to the container.
2. Raise the cover just enough to be able to remove the filer cartridge without damaging the corrugated sleeve.
3. Remove the cartridge and blow off with low pressure compressed air in the opposite direction to the normal flow of air during filtering. If necessary replace the cartridge.

- Clean the cartridge container.
- Insert the cartridge in the container ensuring that the protruding part faces downwards and close the clips.

CHECKING THE FUEL SUPPLY PRESSURE

1. Disconnect the fuel delivery hose before the impulse dashpot.
2. Connect a pressure gauge using a T adapter, between the dashpot and the previously disconnected hose.
3. Detach the vacuum intake hose from the pressure regulator to prevent variations in the idle speed from causing irregular readings.

- Start the engine and when it reaches idle speed check that the pressure is within the specified values:

bar	**2.5 ± 0.2 bar**

- Reconnect the vacuum intake hose to the regulator and with the engine at idle speed check that the fuel pressure falls to about **0.4 bar** and then rises again when the throttle valve. If this does not happen check for leaks in the vacuum intake hose.

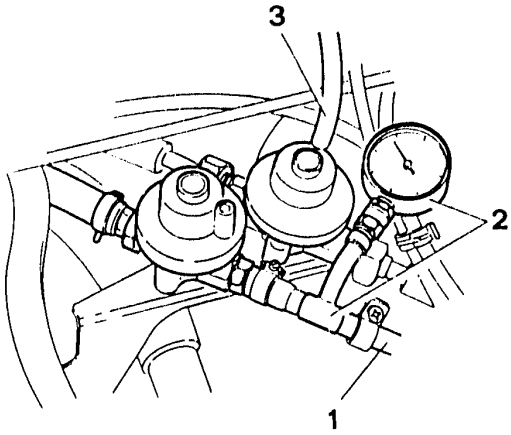

CHECKING EXHAUST EMISSIONS

- Carry out the following preliminary checks:
  - check the ECU parameters
  - Clean or replace the air cleaner filter
  - check the efficiency of the ignition system: spark plugs, cables and ignition coils
  - check the adjustment of the accelerator control cable
- Switch on the toxic gas extractor, start the engine on the vehicle and warm it to normal running temperature (according to standards).
1. Using a suitable exhaust gas analyzer and with the engine at idle speed check that the percentage of CO and unburnt hydrocarbons (HC) leaving the exhaust pipe is below the specified limits.
- If the values measured are above the specified limits the cause may be due to the components of the supply system or to an inefficient lambda probe and/or catalytic exhaust.

The level of toxic exhaust gas cannot be adjusted on this injection system

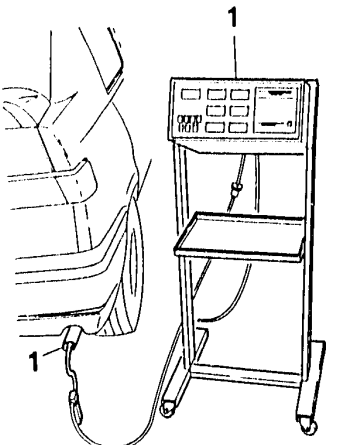

Total emissions leaving the exhaust pipe at idle speed		
CO	% in vol.	≤ 0,5
HC	p.p.m.	≤ 100

TCS

IAW ELECTRONIC INJECTION ENGINE

TECHNICAL CHARACTERISTICS AND SPECIFICATIONS

TECHNICAL CHARACTERISTICS AND SPECIFICATIONS

ENGINE SPECIFICATIONS ..... 01 - 1
ENGINE BLOCK ..... 01 - 2
CRANKSHAFT ..... 01 - 3
MAIN BEARING HALVES ..... 01 - 5
THRUST HALF RINGS ..... 01 - 5
FLYWHEEL ..... 01 - 6
PISTONS ..... 01 - 7
GUDGEON PINS ..... 01 - 8
SEALING RINGS ..... 01 - 8
ROD ..... 01 - 9
ROD BEARING HALVES ..... 01 - 9
CYLINDER HEADS ..... 01 - 10
VALVES ..... 01 - 11
VALVE SEAT REGRINDING VALUES
VALVES ..... 01 - 11
SPRINGS ..... 01 - 12
CAMSHAFT SUPPORT
AND VALVE CUPS ..... 01 - 12
CAMSHAFT ..... 01 - 13
CLEARANCE AND INTERFERENCE
INSTALLATION ..... 01 - 14
SHRINK-FITTING TEMPERATURES ..... 01 - 15
CHECKING AND ADJUSTMENT ..... 01 - 16
Distribution data ..... 01 - 16
Checking valve opening and closing
angles ..... 01 - 17

TECHNICAL CHARACTERISTICS AND SPECIFICATIONS

ENGINE SPECIFICATIONS

ENGINE		30753
Cycle		4-stroke Otto-cycle
Number of cylindrers available		4 horizontal opposed
Fuel		Electronic injection (IAW)
Bore - Stroke Displacement	mm cm^3	80 x 67,2 1351
Combustion chamber volume	cm^3	39,7
Compression ratio		9,5 : 1
Maximum power DIN	kW (CV)	65 (90) at 6000 r.p.m.
Maximum torque DIN	Nm (kgm)	113 (11,5) at 4500 r.p.m.

ENGINE BLOCK

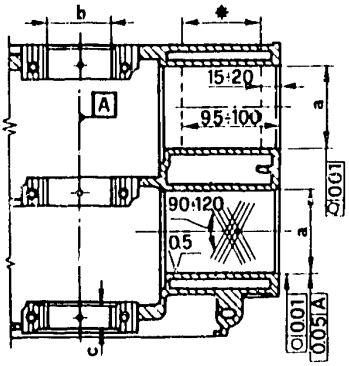

CHECK VALUES			ENGINE 30753
Cylinder bore "a" mm	Standard	cl. A cl. B cl. C cl. D cl. E	80,000 ÷ 80,010 80,010 ÷ 80,020 80,020 ÷ 80,030 80,030 ÷ 80,040 80,040 ÷ 80,050
	Oversize	1ª 2ª 3ª	80,200 ÷ 80,210 80,400 ÷ 80,410 80,600 ÷ 80,610
Out-of-square between cylinder bore centreline and centreline of main bearings		mm	0,05
Taper and out-of-round limit mm	Standard		0,01
	Max		0,02
Cylinder bore surface roughness		µm	0,5 ÷ 1
Cylinder bore grinding angle			90° ÷ 120°
Main bearing diameter "b"		mm	63,663 ÷ 63,673
Widht of rear bearing support "c"		mm	23,68 ÷ 23,73

* Area for dimension check

CRANKSHAFT

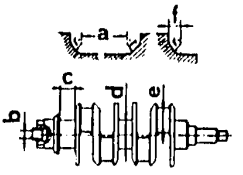

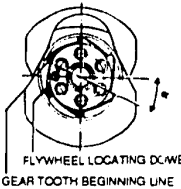

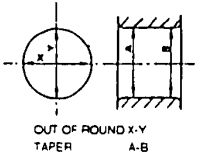

Unit mm

CHECK VALUES			ENGINE 30753
Crankpin diameter "e"	Standard	Blue	49,984 ÷ 49,992
		Red	49,992 ÷ 50,000
Main journal diameter "d"			59,944 ÷ 59,957
Rear main journal lenght "c"			28,51 ÷ 28,55
Fillet radii r	Main journals Rear main journal Crank pins		1,8 ÷ 2 1,5 ÷ 1,7 3,3 ÷ 3,5
Lenght of connection "f"	Front main journals		2,11 ÷ 2,81
Lenght of parallel portion "a"	Central main journals Rear main journals		24,05 ÷ 24,15 24,22 ÷ 24,32

(CONTINUED)

CRANKSHAFT (CONT.)

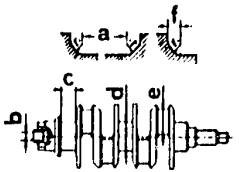

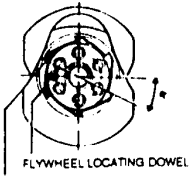

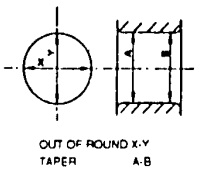

Unit mm

CHECK VALUES		ENGINE 30753
Surface roughness of main journals and crankpin μm		0,16
X-Y Ovality and limit for taper A-B of main journal and crankpin	Standard Maximum	0,006 0,02
Max. error of parallelism between crankpins and main journals		0,015
Max. misalignment among main journals		0,02
Max. misalignment between the centreline of the two pairs of crankpins and the journals centreline		0,25
Max. out-of-square between thrust ring face and main journals		0,03
Rear crankshaft bush diameter "b"		16,083 ÷ 16,087
Fitment of rear crankshaft gear "α" (distributor/oil pump drive)		22° ÷ 26°

MAIN BEARING HALVES



Unit mm

CHECK VALUES	ENGINE
	30753
Thickness "a"	1,833 ÷ 1,839 (1) 1,832 ÷ 1,841 (2)

(1) Supplier code 2782 and 2115
(2) Supplier code 3062

THRUST HALF RINGS

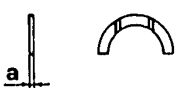

Unit mm

CHECK VALUES	ENGINE
	30753
Thickness "a"	2,311 ÷ 2,362 (1) 2,310 ÷ 2,360 (2)

(1) Supplier code 2115
(2) Supplier code 3062 and 2782

FLYWHEEL

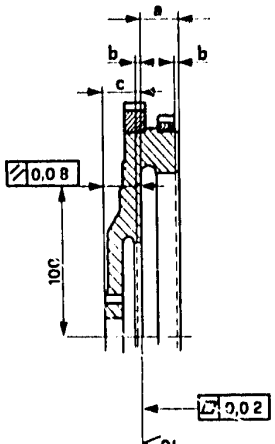

Unit: mm

CHECK VALUES		ENGINE 30753
Regrinding dimensions	a b c	24,0 + 24,2 ≤ 0,2 ≥ 21,15
Parallelism of the driven plate contact face compared with flywheel-to-crankshaft support face (as read at a 100 mm radius)		0,08
Maximum out-of-flat of driven plate contact face		0,02
Surface roughness of driven plate contact face	µm	2

Note: The depth of regrinding dimension "b" must be the same both on clutch driven plate contact face and on the face of the register for the clutch cover, so that dimension "a" kept constant. Dimension "c" must not be lower than the specified limit.

PISTONS

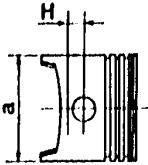

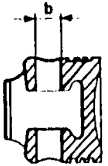

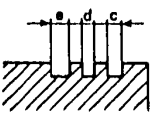

Unit mm

CHECK VALUES			ENGINE 30753 BORGO	ENGINE 30753 MONDIAL
Piston diameter "a" (to be measured squaring with the gudgeon pin hole at dimension "H" of the gudgeon pin hole axis)	Standard	Class A (Blue)	79,960 ÷ 79,970	79,960 ÷ 79,970
		Class B (Pink)	79,970 ÷ 79,980	79,970 ÷ 79,980
		Class C (Green)	79,980 ÷ 79,990	79,980 ÷ 79,990
		Class D (Yellow)	79,990 ÷ 80,000	79,990 ÷ 80,000
		Class E (White)	80,000 ÷ 80,010	80,000 ÷ 80,010
	Oversize	1°	80,150 ÷ 80,170	80,154 ÷ 80,170
		2°	80,350 ÷ 80,370	80,354 ÷ 80,370
		3°	80,550 ÷ 80,570	80,554 ÷ 80,570
First compression ring groove height "c"			1,525 ÷ 1,545	1,525 ÷ 1,545
Second compression ring groove height "d"			1,775 ÷ 1,795	1,775 ÷ 1,795
Oil scraper ring groove height "e"			4,015 ÷ 4,035	4,015 ÷ 4,035
Pin seat bore "b"			21,004 ÷ 21,008	21,004 ÷ 21,008

GUDGEON PINS

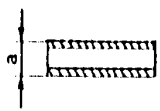

Unit mm

CHECK VALUES	ENGINE 30753
Pin diameter "a"	20,966 ÷ 21,000
Pin-piston slack	0,004 ÷ 0,042

SEALING RINGS

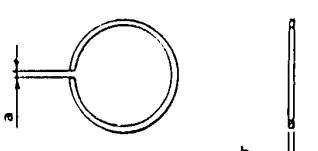

Unit mm

CHECK VALUES		ENGINE 30753
Ring thickness "b"	First ring	1,478 ÷ 1,490
	Second ring	1,728 ÷ 1,740
	Oil scraper ring	3,978 ÷ 3,990
Ring gap "a" (1)	First ring	0,30 ÷ 0,45
	Second ring	0,30 ÷ 0,45
	Oil scraper ring	0,25 ÷ 0,40

(1) To be measured inside the cylinder bore or inside a ring gauge

ROD



Unit mm

CHECK VALUES	ENGINE 30753
Small end bush bore diameter "a"	21,007 ÷ 21,015
Big end bore diameter "b"	53,696 ÷ 53,708

ROD BEARING HALVES



Unit mm

CHECK VALUES		ENGINE 30753
Connecting rod bearing thickness "a"	Blue	1,830 ÷ 1,836
	Red	1,826 ÷ 1,832

CYLINDER HEADS

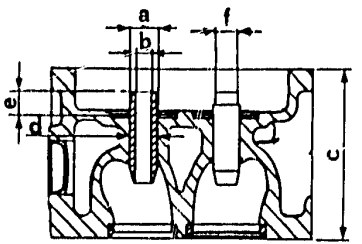

Unit mm

CHECK VALUES	ENGINE 30753
Valve guide housing bore diameter "d"	13,000 ÷ 13,018
Valve duide O.D. "a"	13,050 ÷ 13,068
Diameter of valve guide bore "b"	8,013 ÷ 8,031
Diameter of housing for valve stem seal cap "f"	10,85 ÷ 10,95
Valve guide protrusion "e"	9,3 ÷ 9,5
Min. cylinder head thickness after resurfacing "c" (1)	77,676 ÷ 77,750
Max. error of parallelism between head surfaces	0,05
Max. head bottom face flatness tolerance	0,03
Surface roughness µm	1,6

(1) Resurfacing of cylinder head with hemispherical combustion chamber must be done on both banks of the same engine

VALVES

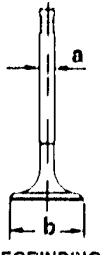

Unit mm

CHECK VALUES		ENGINE 30753
Valve stem diameter "a"	Intake	7,89 ÷ 7,94
	Exhaust	7,89 ÷ 7,94
Valve head diameter "b"	Intake	39,7 ÷ 39,9
	Exhaust	33,0 ÷ 33,2

VALVE SEAT REGRINDING VALUES VALVES

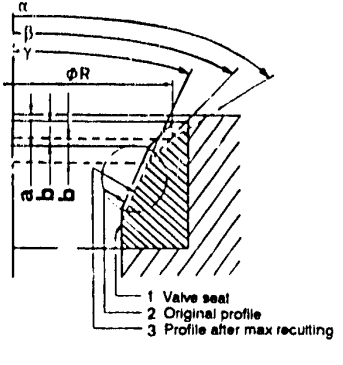

Unit mm

CHECK VALUES		ENGINE 30753
Reference diameter "Ør"	Intake	39,0
	Exhaust	31,9
Cut limit of valve seat top surface "a"	Intake	2,9
	Exhaust	2,9
Cut limit of valve seat mating surface "b"	Intake	1,07 ÷ 1,37
	Exhaust	1,26 ÷ 1,56
Valve seat top surface limit angle "α"	Intake	120°
	Exhaust	120°
Valve seat mating surface limit angle "β"		90° ÷ 90° 30'
Valve seat inner face limit angle "γ"	Intake	70°
	Exhaust	30°

SPRINGS



CHECK VALUES			ENGINE 30753
Lenght of valve springs with spring open "a"	Outer spring	mm	23,25
	Inner spring	mm	21,25
Spring load at lenght "a"	Outer spring	N (kg)	438,5 ± 13,7 (44,7 ± 1,4)
	Inner spring	N (kg)	207 ± 7 (21,1 ± 0,7)
Free lenght	Outer spring	mm	~ 45
	Inner spring	mm	~ 44

CAMSHAFT SUPPORT AND VALVE CUPS

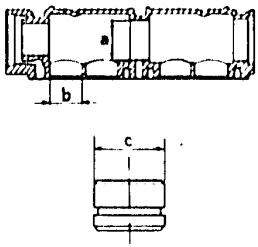

Unit mm

CHECK VALUES		ENGINE 30753
Bore of camshaft journal bearing diameter "a"	Front	35,015 ÷ 35,040
	Central	48,000 ÷ 48,025
	Rear	49,200 ÷ 49,225
Seat tappet bucket diameter "b"		35,000 ÷ 35,025
Tappet bucket diameter "c"		34,959 ÷ 34,975

CAMSHAFT

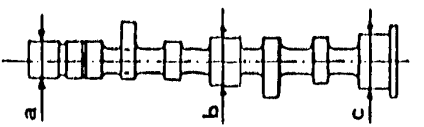

Unit: mm

CHECK VALUES		ENGINE
		30753
Cam height	Intake	9,80
	Exhaust	9,00
Camshaft journal diameter	Front "a"	34,940 ÷ 34,962
	Central "b"	47,940 ÷ 47,956
	Rear "c"	49,140 ÷ 49,156

CLEARANCE AND INTERFERENCE INSTALLATION

Unit: mm

CHECK VALUES		ENGINE 30753
Liner/piston clearance	Standard	0,03 ÷ 0,05
	Oversize	0,03 ÷ 0,06 (1) 0,03 ÷ 0,056 (2)
Ring/groove clearance	First ring	0,035 ÷ 0,067
	Second ring	0,035 ÷ 0,067
	Oil scraper ring	0,025 ÷ 0,057
Piston/gudgeon pin clearance		0,004 ÷ 0,042
Small end/gudgeon pin clearance		0,007 ÷ 0,049
Main journal pin/bearing clearance		0,028 ÷ 0,063 (3) 0,024 ÷ 0,065 (4)
Crankpin/bearing clearance		0,032 ÷ 0,064
Big end play		0,036 ÷ 0,248 (5) 0,04 ÷ 0,25 (6)

(CONTINUED)

(1) Borgo piston
(2) Mondial piston
(3) With bearing half supplier 2782 and 2115
(4) With bearing half supplier 2782
(5) With thrust half rings supplier 2115
(6) With thrust half rings supplier 2115 and 2782

CLEARANCE AND INTERFERENCE INSTALLATION (CONT.)

Unit: mm

CHECK VALUES		ENGINE 30753
Pin/camshaft housing running clearance	Front	0,053 ÷ 0,1
	Central - Rear	0,044 ÷ 0,085
Radial clearance between tappet bucket and seat in camshaft support		0,025 ÷ 0,066
Valve stem/seat guide negative allowance	Intake	0,073 ÷ 0,141
	Exhaust	
Valve guide/seat guide negative allowance	Intake	0,032 ÷ 0,068
	Exhaust	

SHRINK-FITTING TEMPERATURES

COMPONENT	ENGINE 30753
Heating of cylinder head for shrink-fitting of valve seats	140 ÷ 160 °C
Heating of ring gear for shrink-fitting onto engine flywheel	120 ÷ 140 °C

CHECKING AND ADJUSTMENT

Distribution data

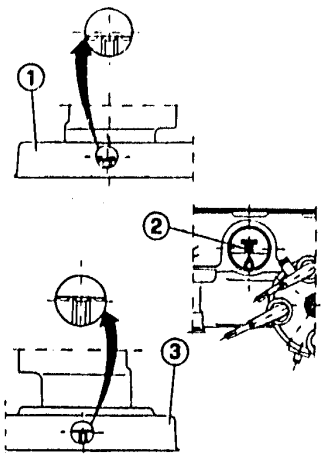

VALVE TIMING DATA		ENGINE 30753
Play between cam heel radius and tappet head	Intake	(*)
	Exhaust	(*)
Timing shaft pulley timing reference position	Right-hand pulley	(**)
	Left-hand pulley	(***)

(*) Engine with hydraulic tappets (with take-up of slack)
(**) Tooth with two milled grooves on right-hand camshaft pulley, in correspondence with the related hole on rear guard 1 of timing pulley
(***) Tooth with two milled grooves on the left-hand camshaft pulley in correspondence with the related hole on rear guard 3 of timing pulley

1 REAR GUARD FOR RIGHT - HAND TIMING BELT
2 T-SHAPPED NOTCH ON FLYWHEEL
3 REAR GUARD FOR LEFT - HAND TIMING BELT

CHECKING AND ADJUSTMENT (CONT.)

Checking valve opening and closing angles

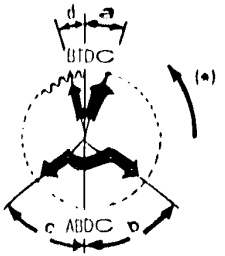

CHECKING VALVE OPENING AND CLOSING ANGLES			ENGINE
			30753
Intake	Opening BTDC	"a"	30°
	Closing ABDC	"b"	84°
Exhaust	Opening BBDC	"c"	68°
	Closing ATDC	"d"	34°

(*) Crankshaft rotation ACW seen from flywheel side

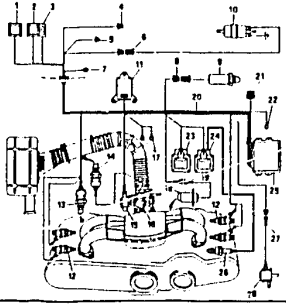

IAW ELECTRONIC INJECTION ENGINE

IAW IGNITION - INJECTION SYSTEM

IAW IGNITION - INJECTION SYSTEM

INTRODUCTION ..... 04 - 1
PRINCIPLES OF OPERATION ..... 04 - 2
Functional diagram ..... 04 - 3
Ignition - injection system wiring diagram ..... 04 - 4
FUEL PUMP ..... 04 - 5
FUEL FILTER ..... 04 - 6
PRESSURE REGULATOR ..... 04 - 7
IMPULSE DASHPOT ..... 04 - 8
ELECTROINJECTORS ..... 04 - 9
INJECTION CONTROL ..... 04 - 10
STARTING STRATEGY ..... 04 - 12
ABSOLUTE PRESSURE SENSOR ..... 04 - 13
ENGINE COOLANT TEMPERATURE SENSOR ..... 04 - 16

IAW IGNITION - INJECTION SYSTEM

INTRODUCTION

In order for a combustion engine to work it must be supplied with **air, fuel** and a **spark** in the cylinder which gives rise to combustion.
The necessary quantity of air is sucked in by the engine through the air cleaner and metered by a valve located on the throttle valve body which is controlled by the accelerator. Fuel is sucked up by an electric pump outside the fuel tank and sends it to the manifold and from there on to the electroinjectors. The fuel pressure is kept constant at 2.5 bars by a pressure regulator. The spark towards the spark plugs is produced by a discharge from two coils which are appropriately activated and deactivated with the optimal advance by the electronic control unit. Ignition is of the static type (without rotating brushes and relative cap).

PRINCIPLES OF OPERATION

The IAW system controls the engine by calculating the amount of intake air on the basis of the pressure measured in the intake manifold and on the engine r.p.m.
In the intake manifold downstream of the throttle valve air meter a pressure builds up to a degree which depends on the position of the throttle valve and the engine r.p.m.
The pressure, engine r.p.m. and water and air temperature values are sent to the control unit which, by way of the injectors supplies the engine with the necessary quantity of fuel to obtain an air-fuel ratio (established by engineers) which is optimal for all the operating conditions of the engine: starting, idling, constant increase in speed, acceleration, deceleration, full power, variations in air and water temperatures.
The 4 injectors are controlled simultaneously and preform two injections for each engine cycle (720°).
The system is also equipped with an anti-pollution system composed as follows:
a) A trivalent catalyzer which serves to reduce the emissions of toxic gasses (HC - CO - NOx).
b) A probe measuring the quantity of oxygen in the exhaust, so that, during the phases of engine idling and use, the air- fuel ratio is kept at a level suitable to enable the catalyzer to operate under the best possible conditions (ensuring the most effective elimination of pollutants).
Injection times refer to a base map which takes into account all the operating conditions of the engine and is corrected on the basis of the engine water temperature and other operating conditions like altimetric pressure, battery voltage, variations in the throttle valve and lambda probe signals, etc.
Engine r.p.m. and the absolute pressure in the intake manifold also make it possible to calculate the optimal **ignition advance** for each condition of the engine.
The r.p.m. and water temperature values are used to keep the **minimum rotational speed** constant during warming and when the various electronic accessories are engaged. The constant idle speed actuator located on the throttle body regulates the quantity of air sucked in by the engine so that the idle speed can be kept stable at the value set by the control unit.

PRINCIPLES OF OPERATION (continued)

Functional diagram

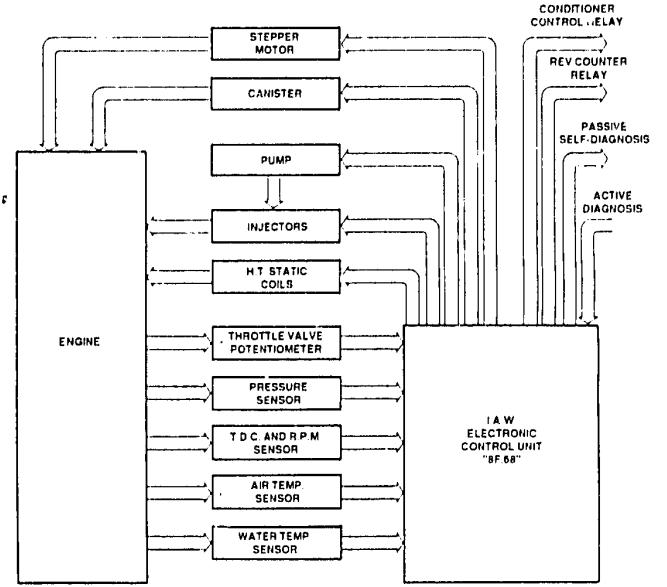

PRINCIPLES OF OPERATION (continued)

Ignition - injection system wiring diagram

1. Main relay
2. Secondary relay
3. Fuse for injection system (20A)
4. Conditioner wiring connector
5. Connector for rev counter signal
6. Dashboard wiring connector
7. Battery (+)
8. Connection for lambda probe
9. Heated lambda probe
10. Electric fuel pump
11. Absolute pressure sensor
12. Electroinjectors
13. Water temperature sensor
14. Air temperature sensor
15. Throttle valve potentiometer
16. Idle actuator
17. Centralized earths
18. T.D.C and revolution sensor
19. Connection for r.p.m. sensor
20. Electronic injection wiring
21. Connection for ALFA TESTER
22. R.P.M sensor earth braid
23. Ignition coil "a"
24. Ignition coil "b"
25. Ignition and injection control unit
26. Spark plugs
27. Connection for evaporation solenoid valve
28. Evaporation solenoid valve

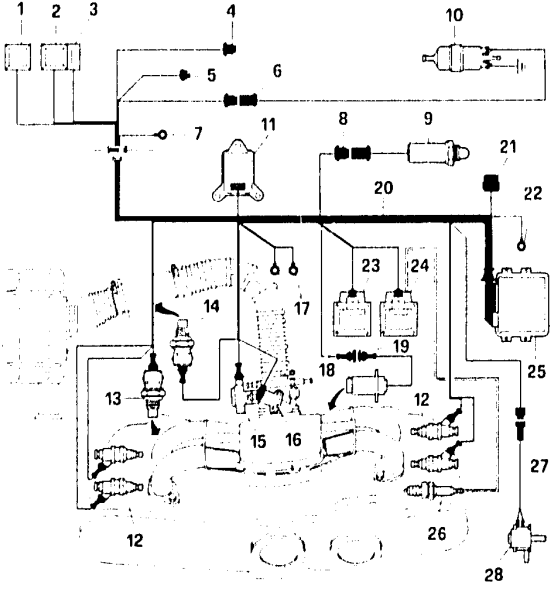

FUEL PUMP

The fuel pump is of the volumetric roller type. When the rotor (2) turns, pulled by the motor, it creates volumes which move from the inlet port (1) to the delivery port (5). These volumes are contained by rollers (4) that adhere to the outer ring during rotation of the motor.
The pump is also fitted with a non-return valve (3) which prevents the fuel system from draining when the pump is not working. In addition an excess pressure valve (6) short-circuits by aspiration when pressures of over **5 bars** are produced and in this way prevents the electric motor from overheating.
The electrical part is composed of an armature with a hollow shaft and activation arises through permanent ceramic magnets. This solution carries various advantages:

- location outside the fuel tank
- reduced operating temperatures due to the passage of the petrol which in addition to its cooling action, also acts as a detergent and cleans the brushes and manifold.

Devices are also fitted which prevent the generation of electrostatic charges and limit radio inteference.
The supply sockets are polarized to prevent possible inversion of the connections.

1. Inlet port
2. Rotor
3. Non-return valve
4. Rollers
5. Delivery port
6. Excess pressure valve

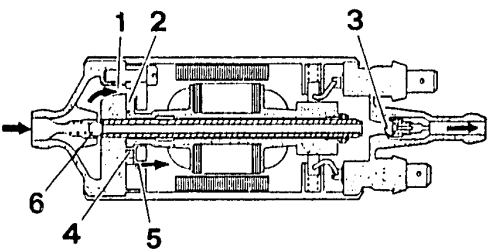

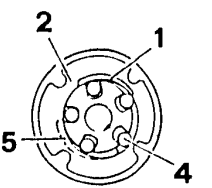

FUEL FILTER

The fuel filter has the task of eliminating any polluting particles present in the fuel.
This is important as the injectors are extremely sensitive to foreign matter.
It is installed between the suction pump and the fuel manifold and an arrow is engraved on the outer casing indicating the direction in which the fuel flows.
The filter is fitted with a paper filter element with an area of approximately **1,400 cm²** and a filtering capacity of about **5 µm**.
The fall in pressure between fuel inlet and outlet must be:

at 60 lit/hr: $\Delta P \leq 0.01$ bars
at 120 lit/hr: $\Delta P \leq 0.025$ bars

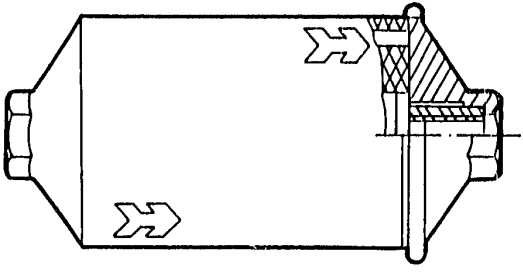

PRESSURE REGULATOR

The fuel pressure regulator is necessary in order to keep the pressure on the electroinjectors at a constant level.
It is of the differential diaphragm type and is factory adjusted to a pressure of **2.5 ± 0.2 bars**.
The pressurized fuel coming from the pump determines the force acting on the mobile parts (1 and 2) which is opposed by a calibrated spring (3).
When the pre-set pressure level is exceeded the cap valve (2) is moved and the excess fuel flows into the tank.
The pressure regulator is also influenced by the vacuum in the intake manifold (where the electroinjectors are located) and the variations in pressure which occur on the the tip of the injector also occur on the regulator's diaphragm.
This enables the pressure on the ends of the injector to be kept constant under all engine running conditions. The fuel delivery is determined by the opening times (IT).

Example:
If the vacuum increases by **0.5 bars** on the tip of the injector, the pressure of the fuel decreases by **0.5 bars**.

Fuel pressure is taken as a fixed parameter, not controlled by the control unit, but essential in order to calculate the quantity of fuel required.

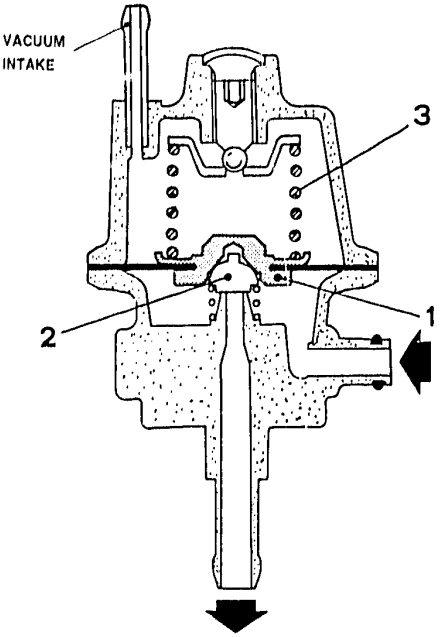

IMPULSE DASHPOT

The dashpot is connected upstream of the fuel separator hose and suppresses the pulsations which occur, above all at low r.p.m.
The pulsations are generated by variations in fuel pressure caused by the opening and closing of the electroinjectors.

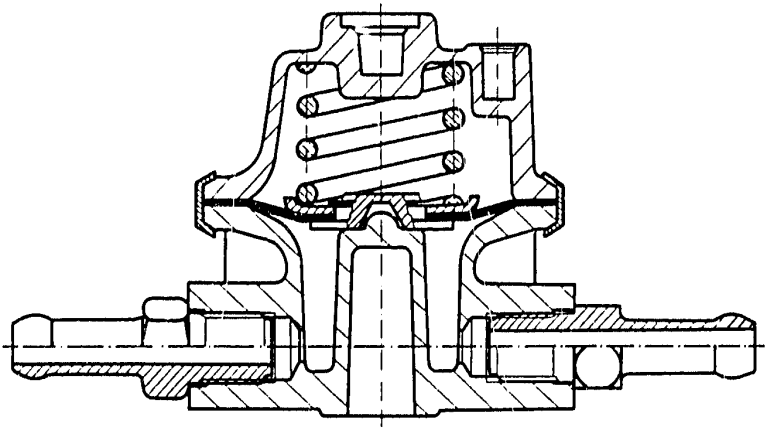

ELECTROINJECTORS

The electroinjectors are installed on the inlet ducts just behind the intake valve.
The nozzle of the injector is so designed that the jet of duel sprays out in a cone of 30°.
The electroinjectors are shut off by the fuel manifold which presses them into their seatings in the intake ducts.
The electroinjectors are anchored to the fuel manifold by safety clips. Two rubber rings (10) and (11) ensure the sealing of the intake duct and fuel manifold.
The electroinjectors dose the amount of fuel required by the engine.
They are devices of the "all or nothing" type as they have only two possible positions - open and closed.
The allow fuel to pass when they are open and prevent its passage when closed.
Basically they are composed of a nozzle or ring controlled by a solenoid and a return spring (4).
In the home position the needle (2) which forms a single body with the plunger (3), is pushed by the spring (4) on the tip of the injector (6) so that it seals off the hole preventing unwanted fuel from escaping.
As soon as the winding (5) is activated the plunger (3) is attracted, compresses the spring and opens the hole in the nozzle allowing the fuel to pass.
Taking the physical characteristics of the fuel (viscosity, density) and the pressure peaks (pressure regulator) to be constant, the quantity of fuel injected depends exclusively on the opening times of the injector.
The activation time of the winding is normally referred to a "injection time" and is represented by the letters "IT". The body of the electroinjector houses a two pin socket for the electrical connection to the system.

1. Injector body
2. Needle
3. Magnetic plunger
4. Helical spring
5. Winding
6. Tip of injector
7. adjustable spring thrust device
8. Fuel filter
9. Electrical socket
10. Rubber vacuum seal ring
11. Rubber fuel seal ring

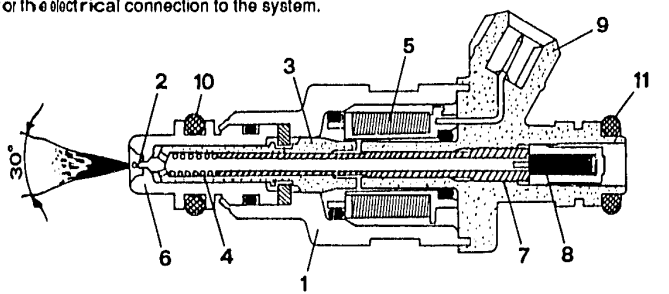

INJECTION CONTROL

During the starting, four operating phases can be recognized:

PHASE 1	ASYNCHRONOUS INJECTION	ONE IMJECTED WHEN THE KEY IS TURNED
PHASE 2	SYNCHRONOUS INJECTION	ENRICHMENT DURING CONSTANT STARTING + ENRICHMENT DURING WARMING
PHASE 3	SYNCHRONOUS INJECTION	ENRICHMENT IN DECREASING STARTING + ENRICHMENT DURING WARM UP
PHASE 4	SYNCHRONOUS INJECTION	ENRICHMENT DURING WARMING

Enrichment, depending on the temperature of the water active during phases 2, 3, 4, overlaps the specific enrichment of the starting phases 2 and 3.
A drainage function makes it possible to take into account an excess of fuel and is activated if the throttle valve adopts the "full load" position in phase 1 and will remain active as long as the throttle valve has a full load value.



INJECTION CONTROL (continued)

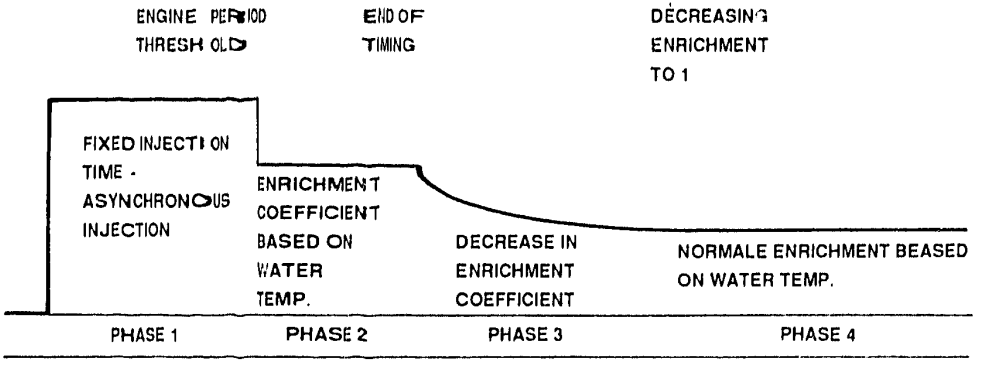

STARTING PHASE

STARTING STRATEGY

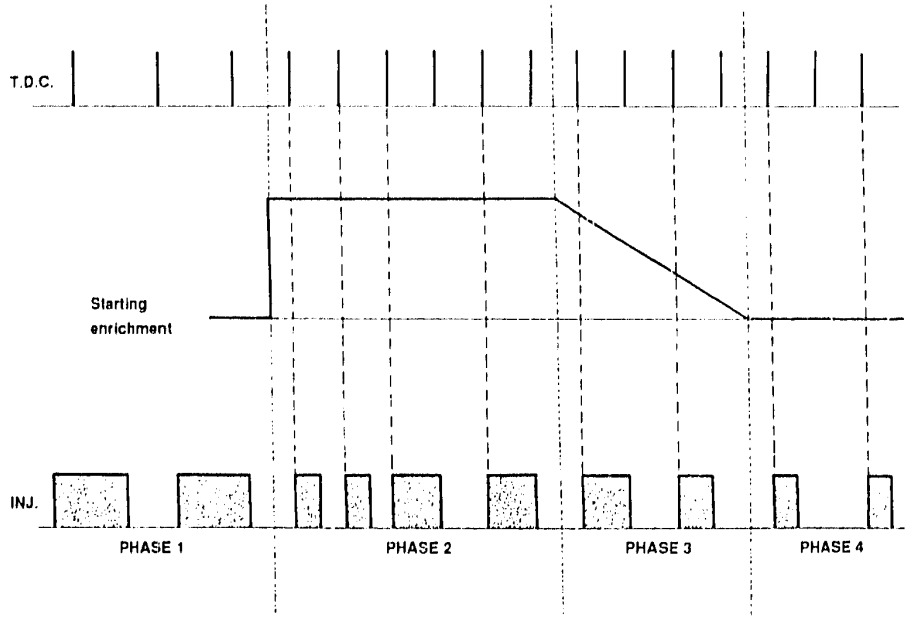

ABSOLUTE PRESSURE SENSOR

The sensitive element is composed of a resistance bridge (Wheatstone) printed on an extremely thin, circular ceramic plate (diaphragm) installed on the lower part of a ring support of the same ceramic material.
The upper part of the ring is then closed by another plate which also acts as a support for the electronic signal amplifier.
With a specific domed tool an absolute vacuum is created and the vacuum chamber is then hermetically sealed.

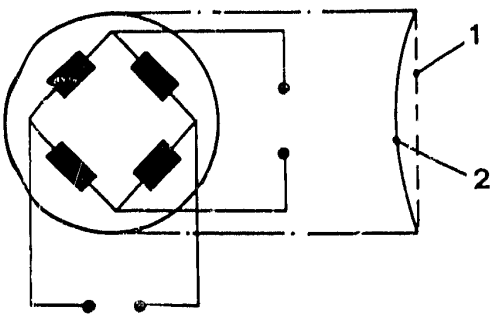

1. Engine vacuum
2. Atmospheric pressure

ABSOLUTE PRESSURE SENSOR (continued)

At the point at which the signal leaves the Wheatstone bridge a circuit amplifier is installed which, after a series of laser calibrations have been carried out and the sensor has been adjusted to the various temperatures, compensates the heat excursion across the entire range of use.

1. Signal amplifier
2. Vacuum chamber
3. Sensitive diaphragm

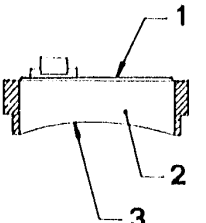

The sensor is then installed in a grooved plastic container which, with a suitable rubber hose and a specific port in the intake manifold, ensures the pneumatic connection.
The sensitive diaphragm, when the engine is off, flexes in response to the atmospheric pressure (mmHg) and when the ignition key is engaged the exact atmospheric pressure value is immediately available.

1. Power supply + 5 Volts (Pin 14)
2. Earth (Pin 16)
3. Signal (Pin 32)

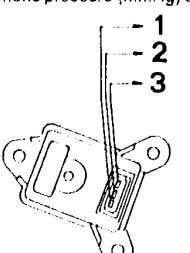

ABSOLUTE PRESSURE SENSOR (continued)

Operation of the engine generates a vacuum (atmospheric engines).

The effect of this vacuum in the intake manifold results in a mechanical action on the ceramic diaphragm of the sensor which flexes resulting in a variation in the resistance value.
As the power supply is kept absolutely constant at 5 volts by the electronic control unit, by varying the resistance, the voltage in output also varies in accordance with the diagram below.
Thus:

- initial and important information regarding the quantity of intake air.

The electrical connection to the electronic control unit is actuated by a socket located on the container itself.

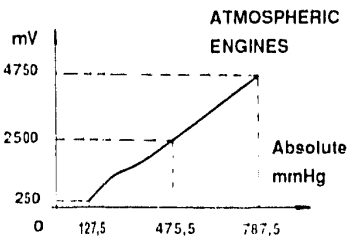

ENGINE COOLANT TEMPERATURE SENSOR

This sensor is installed on the engine cooling circuit.
It is composed of a brass body from which a plastic basket protrudes which protects the sensitive element formed by an NTC thermistor (Negative Temperature Coefficient) which basically means that the electrical resistance of the sensor decreases as the temperature increases.
The NTC thermistor varies its resistance (in Ohms) depending on the temperature of the engine coolant as shown in the diagram below.
In this way information regarding the temperature of the engine coolant is obtained.

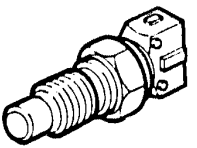

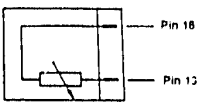

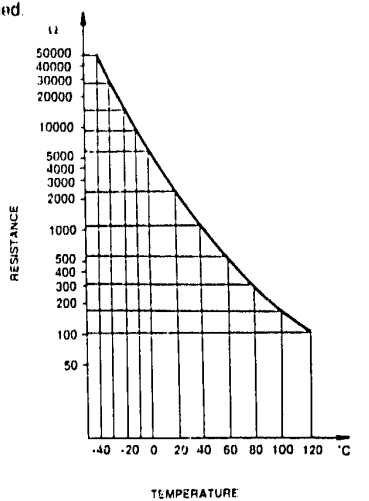

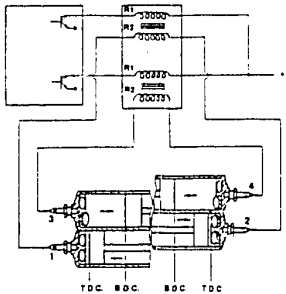

IAW ELECTRONIC INJECTION ENGINE

IAW IGNITION - INJECTION SYSTEM (continued)

IAW IGNITION - INJECTION SYSTEM (continued)

AIR TEMPERATURE SENSOR ..... 04 - 17
THROTTLE BODY ..... 04 - 18
THROTTLE VALVE POSITION SENSOR ..... 04 - 19
CONSTANT IDLE SPEED ACTUATOR ..... 04 - 20
T.D.C. AND R.P.M. SENSOR ..... 04 - 22
CONTROL OF SIGNAL PANEL ..... 04 - 24
IGNITION CONTROL ..... 04 - 25
STATIC DISTRIBUTION OF HIGH VOLTAGE ..... 04 - 26
CALCULATION OF DWELL TIME ..... 04 - 28
CALCULATING ADVANCE ..... 04 - 29
LAMBDA PROBE ..... 04 - 30

IAW IGNITION - INJECTION SYSTEM (continued)

AIR TEMPERATURE SENSOR

This sensor is installed on the intake duct.
It is composed of a brass body from which a plastic basket protrudes which protects the sensitive element formed by an NTC thermistor (Negative Temperature Coefficient) which basically means that the electrical resistance of the sensor decreases as the temperature increases.
The NTC thermistor varios its resistance (in Ohms) depending on the temperature of the air in the manifold as shown in the diagram below.
In this way information regarding the intake air temperature is obtained.

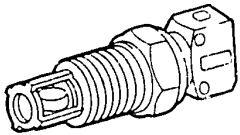

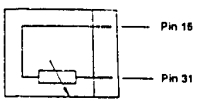

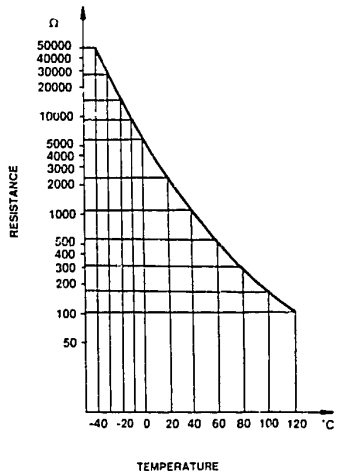

THROTTLE BODY

This serves to dose the quantity of air supplied to the engine depending on the requirements of the driver perceived through the accelerator pedal.
The passage of the engine coolant in the throttle valve area prevents the formation of ice.
The oil vapour intake hose sucks the vapours during idling.
The throttle valve position sensor and the constant idle speed actuator (described elsewhere in this manual) are located on the throttle body.

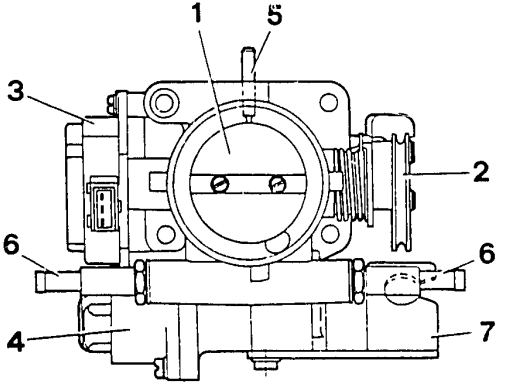

1. Throttle valve
2. Throttle valve control lever
3. Throttle valve position sensor
4. Constant idle speed actuator
5. Idle blow-by intake
6. Throttle valve area heating circuit
7. Accelerator sheath support

THROTTLE VALVE POSITION SENSOR

This is composed of a potentiometer (1) the mobile part of which (2) is directly controlled by the throttle valve shaft.
During operation the control unit supplies the potentiometer with 5 Volts applied to blades "a" and "b".
On blade "b" a voltage accumulates which is directly proportional the position of opening of the throttle valve.
Depending on the voltage sent by blade "b", the control unit
recognizes the position of the throttle valve and suitably
corrects the mixture ratio.
When the throttle valve is closed an electrical signal of ~ **0.3 V** reaches the control unit. From this signal the control unit recognizes the idle and cut-off conditions on the basis of the engine r.p.m.
For an opening of the throttle valve greater than ~ **30°**, a signal of approximately **3.3 V** returns to the control unit and increases progressively until it reaches a voltage of about **5 V** when the throttle valve reaches its maximum opening of **86°**.

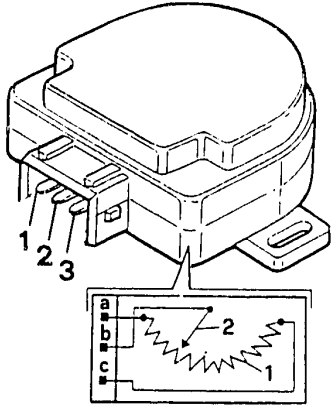

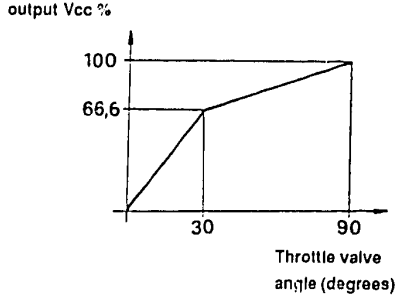

1. Earth (Pin 16)
2. Signal (Pin 30)
3. Power supply + 5 V (Pin 14)

CONSTANT IDLE SPEED ACTUATOR

This is an extremely precise position actuator with a good resolution of ± **5 revolutions of the engine** used to control the idle r.p.m.
It is formed by an electric step-step motor and an adapter of the nut screw type which transforms the rotary motion of the shutter into linear motion. From the electrical commands received from the control unit, the step-step motor rotates and by way of the nut screw group moves the shutter axially (approx. **0.04 mm/step**) varying the by-pass air gap as shown in the illustration. This brings about a variation in the quantity of air taken in by the engine when idling just enough to enable its rotational speed to be kept constant on the basis of the temperature of the engine cooling liquid. The minimum air flow sucked in by the engine when idling is factory adjusted by regulating the throttle valve opening with the by-pass hole completely closed.
Be careful not to tamper with the regulation screw.
The maximum quantity of air sucked in by the engine when idling is guaranteed by the retracted position of the shutter (**200 steps** equal to approx **8 mm** of travel). The number of operational steps depends on the conditions of the engine: temperature, engagement of electrical devices, presence of conditioner, engine at normal running temperature.

CHARACTERISTICS
- **Resistance of wiring**
  R = 53 Ω ± 10% at 20°C
- **Operation temperature**
  -40°C + 85°C

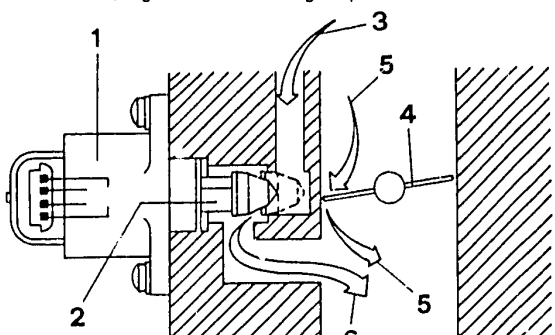

1. Actuator
2. Shutter
3. By-pass
4. Throttle valve
5. Throttle valve air intake
6. Air controlled by the by-pass

CONSTANT IDLE SPEED ACTUATOR (continued)

Before replacing the constant idle speed actuator, first disconnect the positive terminal from the battery. In this way, when the ignition key is turned to the service position, the control unit resets the new actuator (at the stop limit) and positions it at the number of operational steps on the basis of the engine water temperature so that it can control the correct idle r.p.m. with an axial movement of the shutter (forwards or backwards).
To check the correct operation, the Tester must be used.

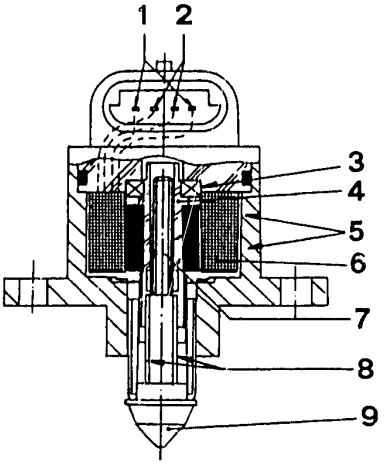

1. Phase 2
2. Phase 1
3. Bearing
4. Nut screw
5. Coil
6. Solenoid
7. Screw
8. Anti-rotation grooving
9. Ogive

T.D.C. AND R.P.M. SENSOR

This sensor, which is of the variable reluctance electromagnetic type is fixed to the clutch cover and is located in front of a **60 tooth** phonic wheel. Two of the teeth on the phonic wheel have been removed to permit the T.D.C to be recognized.
When the control unit recognizes the missing tooth it counts **20 teeth** in order to identify the cylinder pair (1-2) and **50 teeth** for the cylinder pair (3-4).

AIR GAP: 0.5 - 1.5 mm (not adjustable)

INTERNAL RESISTANCE MEASURED BETWEEN CLAMPS: 610 Ω < R < 750 Ω

STARRING VOLTAGE (Voltmeter in alternating position): U = from 1 - 5 V depending on the conditions of the battery, accessories and engine rotation

- **Air gap**
  0.5 - 1.5 mm (not adjustable)
- **Internal resistance measured on the pins**
  610 Ω < R < 750 Ω
- **Starting voltage**
  (Voltmeter in the alternating position)
  EffectiveV =some V
- **Engine rotation speed:**
  - minimum: 25 r.p.m.
  - maximum: 7000 r.p.m.

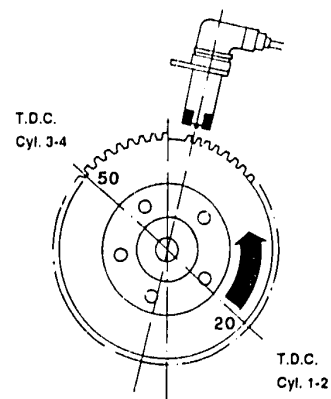

T.D.C. AND R.P.M. SENSOR (continued)

In addition to identifying the positions of the TDCs of cylinders 1-2 and 3-4 the signal from the sensor serves as a microprocessor for:

1 - Ignition control (advance times and Dwell time)
2 - Generate the rev counter signal
3 - confirm the synchronization at each revolution of the engine by recognizing the two missing teeth.

The lack of this signal or of the relative synchronization (**60-2 signals for each revolution**) does not permit the operation of the injection control unit.

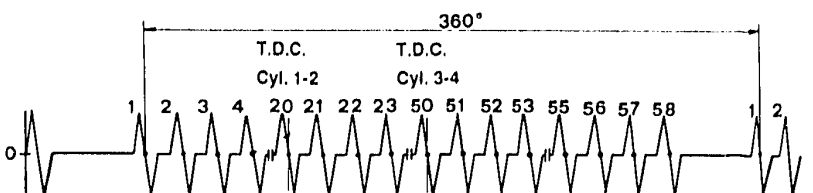

CONTROL OF SIGNAL PANEL

Main function which makes it possible to:

- recognize the T.D.C.
- control starting (advance value and Dwell time)
- generate the engine r.p.m. signal for the IAW control unit

Signal panel taken from phonic wheel 60-2 teeth.
the T.D.C. corresponds to teeth 20 and 50.

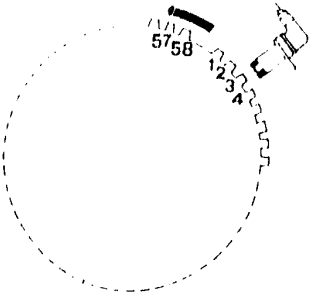

FORM OF SIGNAL:

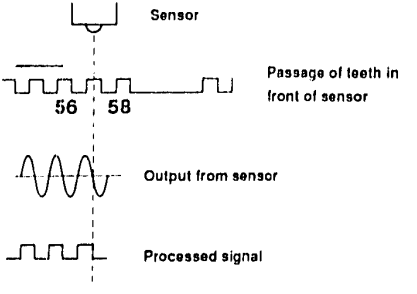

IGNITION CONTROL

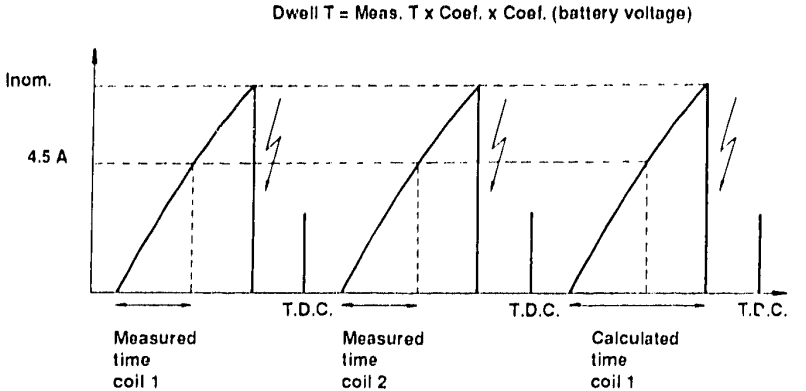

STATIC DISTRIBUTION OF HIGH VOLTAGE

It is known that the insulating characteristics of the rotating brushes and the cap play a fundamental role. In fact any dispersion of insulation towards an earth may prejudice the ignition. In particular during the winter or during periods of heavy rain.
The high voltage static distribution, characterized by the absence of rotating brushes and relative cap, eliminates the dangers of electrical dispersion.
The solution adopted in our system is of the static, lost spark type.
For four cylinder engines 2 double output coils are used.
The main circuits of the coils are directly connected to the control unit which permits or prevents passage of the current originating from the battery.
The control unit also controls both the spark advance to the various cylinders in relation to the T.D.C. and the conduction times necessary for the coil to store energy.
The spark plugs of cylinders 1-2 and 3-4 are connected in series to the relative coils resulting in a simultaneous discharge to the spark plugs connected to the same coil.
With reference to the diagram, the control unit controls the two power phases alternately which permits the current to circulate in the main windings (R1) of the coil for long enough to guarantee a nominal 6A.
At the moment in which the control unit removes control from the two power phases energy is transferred from the main to the secondary coil.

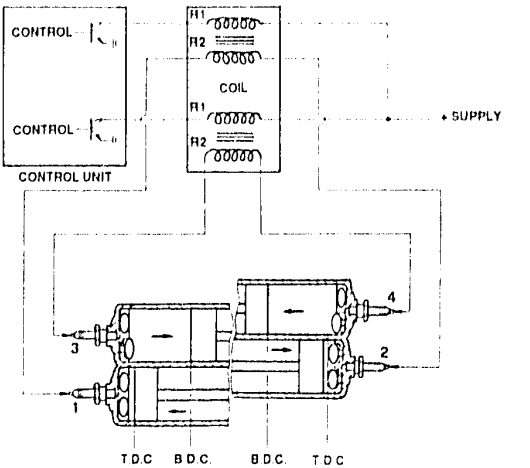

STATIC DISTRIBUTION OF HIGH VOLTAGE (continued)

This transfer instantly produces a induced voltage at the ends of the secondary coil which will always have the same polarity (one end will assume a positive potential and the other negative). These potentials will also be assumed by the central electrodes of the spark plugs connected to them.
As the induced voltage on the secondary coil will always be of the same polarity it follows that the discharge of the coil will always be in the same direction and the sparks will therefore strike in opposite directions. The spark will strike from the earth electrode to the central electrode on the spark plug with a positively charged central electrode and on the spark plug with a negatively charged central electrode the spark will strike from the central electrode to the earthed electrode.
It also follows that after use the spark plugs will show different degrees of wear affecting the electrodes; on one the central electrode will show most signs of wear and on the other the earth electrode will be more worn.
The operating conditions of the spark plugs will determine the intensity of the spark.
In the cylinder which is at the end of the exhaust phase the spark will be very weak (lost spark) due to the presence of exhaust gas which is not under pressure. On the other hand there will be an intense spark in the cylinder which is at the end of the compression phase due to the compressed air-fuel mixture.
The high voltage cables are of the resistive type and of equal length in order to balance the high voltage system so that the same performance levels are obtained on all cylinders.

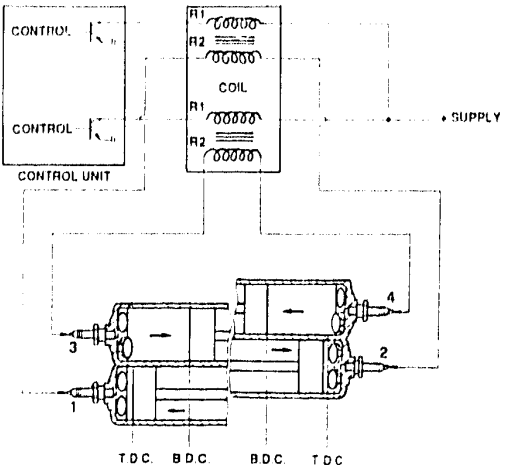

CALCULATION OF DWELL TIME

The Dwell control strategy is a prediction strategy. It ensures that, at the moment of ignition, the correct current reaches the coil.
A measurement of the time necessary for the current in to coil to reach **4.5 A** is taken. Multiplying by a coefficient interpolated by a battery voltage function table results in the prediction of the conduction in the coil.
Depending on the revolutions, the measured conduction time used for this calculation will be of half a revolution, half a revolution before, or one revolution before.
If this reference time is not available (e.g. before ignition), its value is read from a battery voltage function table.

CALCULATING ADVANCE

When The injection control unit microprocessor is signalled by the phonic wheel (60 less 2 teeth), and as soon as it recognizes the two missing teeth, it begins to count and knows that after 20 teeth it will be mechanically at the T.D.C. of cylinders 1 or 2, while after 50 teeth it will be mechanically at the T.D.C. of cylinders 3 or 4.
On the basis of the acquired parameters (pressure - revs) and of the dynamic function corrections based on the engine conditions, it begins the calculation of the advance and the conduction in the first coil of the cylinder pairs 1-2 or 3-4.

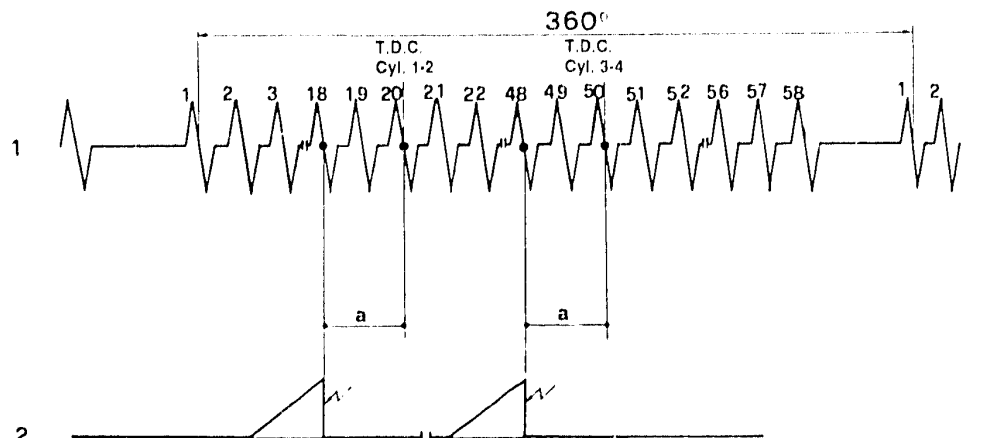

LAMBDA PROBE

This sensor is of the ohmic type and is composed of an element in multilayer aluminium. The sensitive element, the heating element (in platinum) and the connection/output contacts on different layers of this element are created using the thick film technique (with TiO_2 based ink).
The operation of this component is based on a variation in resistance of the sensitive element on the basis of the concentration of oxygen in the exhaust.
The sensitive element and the heater are located inside a metallic container which is characterized by a windowed protruberance (housing for the actual sensitive element), by a thread and by a body containing the sensor support, the connection to the output cables and the gaskets.

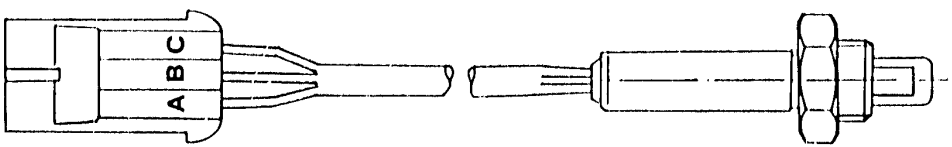

- ON/OFF HEATED TYPE; THICK FILM TECHNOLOGY
- METRIPACK 3 WAY CONNECTOR
- RESISTANT TO IMMERSION IN FUEL
- OPERATING TEMPERATURE 250° - 850 °C
- IMPROVED RESISTANCE TO WATER
- IMPROVED RESISTANCE TO LEAD
- REACTION TIMES : RICH LEAN < 120 msec
  RICH LEAN < 40 msec

LAMBDA PROBE (continued)

1. Sealing insert environment side
2. Vitreous sealing on exhaust gas side
3. Metallic runner
4. Ceramic support
5. Sensitive element
6. Sensor housing protruberance
7. Window
8. Retaining thread
9. Metal body
10. Terminal/cable connection

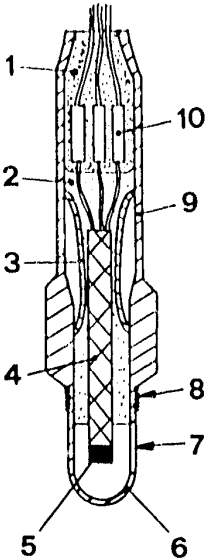

EQUIVALENT CHART OF THE OXYGEN SENSOR

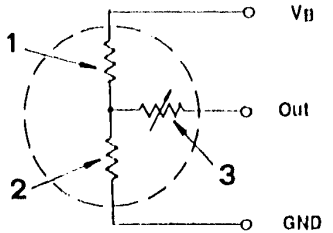

1. Heater
2. Divider
3. Titanium

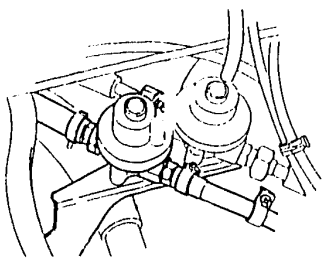

IAW ELECTRONIC INJECTION ENGINE

IAW IGNITION - INJECTION SYSTEM (continued)

FUEL SUPPLY SYSTEM

IAW IGNITION - INJECTION SYSTEM (continued)

35 PIN CONNECTOR FOR INJECTION CONTROL UNIT ..... 04 - 32
INJECTION - IGNITION SYSTEM WIRING DIAGRAM ..... 04 - 34
Chart A ..... 04 - 34
Chart B ..... 04 - 35
Key to wiring diagram ..... 04 - 36

FUEL SUPPLY SYSTEM

ASSEMBLY ..... 04 - 37
FUEL PUMP ..... 04 - 38
Removal - Refitting ..... 04 - 38
FUEL FILTER ..... 04 - 39
Substitution ..... 04 - 39
IMPULSE DASHPOT ..... 04 - 40
Removal - Refitting ..... 04 - 40
FUEL PRESSURE REGULATOR ..... 04 - 41
Removal - Refitting ..... 04 - 41
ELECTROINJECTORS ..... 04 - 42
Removal - Refitting ..... 04 - 42
CHECKING AND ADJUSTING THE ACCELERATOR CABLE ..... 04 - 43

IAW IGNITION - INJECTION SYSTEM (continued)

35 PIN CONNECTOR FOR INJECTION CONTROL UNIT

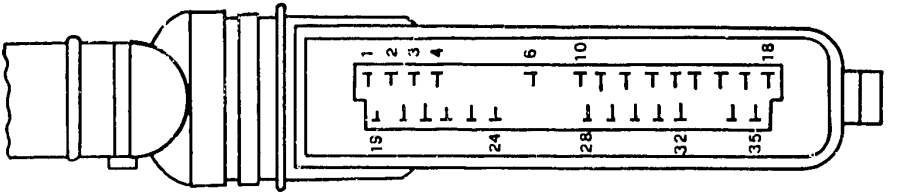

Control unit pin-out function

1. Ignition coil 1 control output
2. Output for Phase B stepper
3. Output for phase D stepper
4. ECU relay control
5. Not connected
6. Not connected
7. Not connected
8. Input for conditioner activation
9. Not connected
10. Serial line input (line L)
11. Revolution sensor (-)
12. Lambda sensor (-)
13. Input for water temperature signal
14. Reference voltage (+ 5V)
15. Serial line output (line K)
16. Sensor analog earth
17. Power earth
18. Output for injector control

35 PIN CONNECTOR FOR INJECTION CONTROL UNIT (continued)

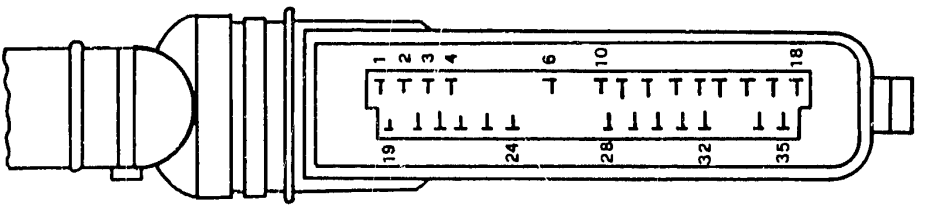

19. Ignition coil 2 control output
20. Output for phase A stepper
21. Output for phase C stepper
22. Canister output
23. Output for pump/rev counter relay
24. Output for conditioner relay control
25. Not connected
26. Not connected
27. Not connected
28. Input for revolution sensor (+)
29. Input for Lambda probe (+)
30. Input for throttle valve position sensor signal
31. Input for air temperature signal
32. input for absolute pressure sensor signal
33. Not connected
34. Power earth
35. ECU supply

CAUTION: Voltage may be present on the disconnected pins, therefore in order to avoid shorting the system and damaging the control unit no connections should be made.

INJECTION - IGNITION SYSTEM WIRING DIAGRAM (Chart A)

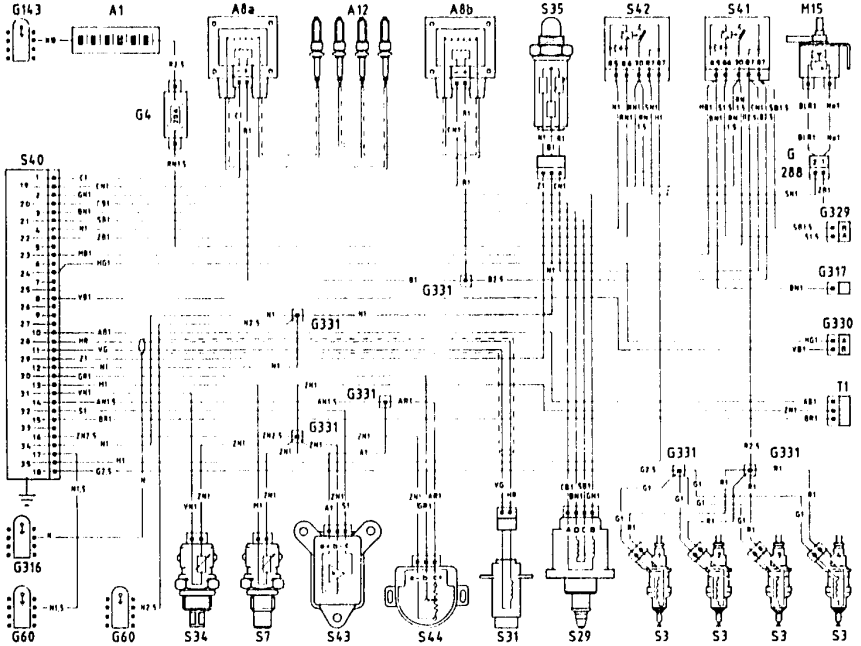

INJECTION - IGNITION SYSTEM WIRING DIAGRAM (Chart B)

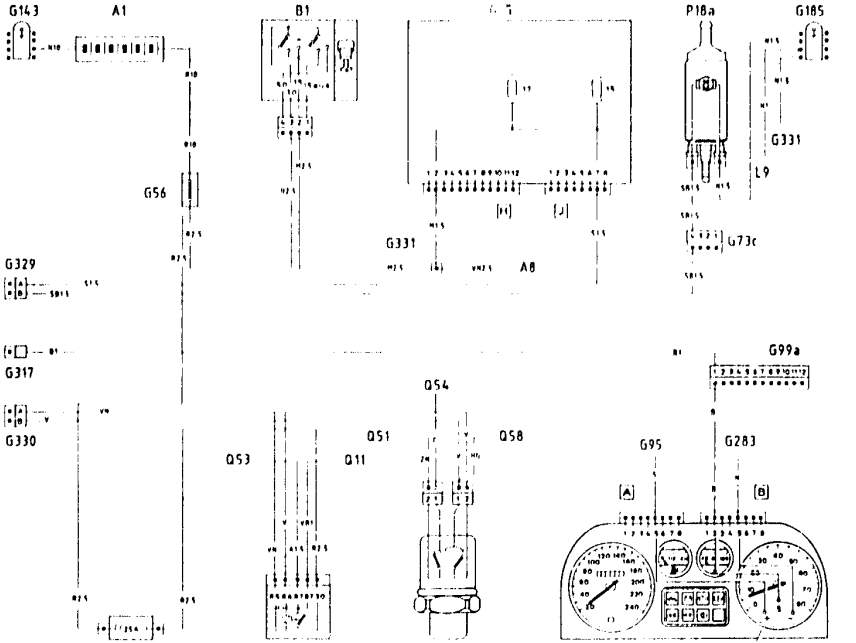

KEY TO WIRING DIAGRAM

A1	Battery
A8	Ignition coil
A8a	Ignition coil A
A8b	Ignition coil B
A12	Spark plugs
B1	Ignition switch
C1	Electronic rev counter
C10	Instrument panel
G4	Free fusebox
G56	Branch terminal board
G60	Earth for injection wiring
G73c	Rear services connection (4-way)
G95	Centralized fusebox
G99a	Dashboard wiring connector A
G143	Earth for central services tank
G185	Earth in luggage compartment - LH side
G283	Earth on services tank - LH side
G288	Injection wiring - evaporation solenoid wiring connector
G316	Earth for engine r.p.m. and timing sensor sheath
G317	Engine - rev counter - injection wiring connector
G329	Dashboard wiring-injection wiring connection
G330	Injection wiring-electric fans for condensers wiring connection
G331	Ultrasound welding connection
L9	Fuel level gauge sender
M15	Evaporation solenoid valve
P18a	Main fuel pump
Q11	Electromagnetic coupling for compressor
Q20	Minimum and maximum sensor (trinary) pressure switch
Q51	Control potentiometer with switch
Q53	Electric fan for left-hand condenser
Q54	Electric fan control relay for right-hand condenser
Q55	Compressor electromagnetic coupling and electric fan for left-hand condenser simultaneous control relay
Q58	Electronic thermostat control unit
S3	Electroinjectors
S7	Engine coolant temperature sensor
S29	Idle speed adjustment actuator
S31	R.P.M and timing sensor
S34	Air temperature sensor
S35	Heated lambda probe
S40	Ignition/injection control unit
S41	Main relay with diode in parallel
S42	Secondary relay with diode in parallel
S43	Absolute pressure sensor
S44	Throttle valve potentiometer
T1	Connector for ALFA TESTER

FUEL SUPPLY SYSTEM
ASSEMBLY

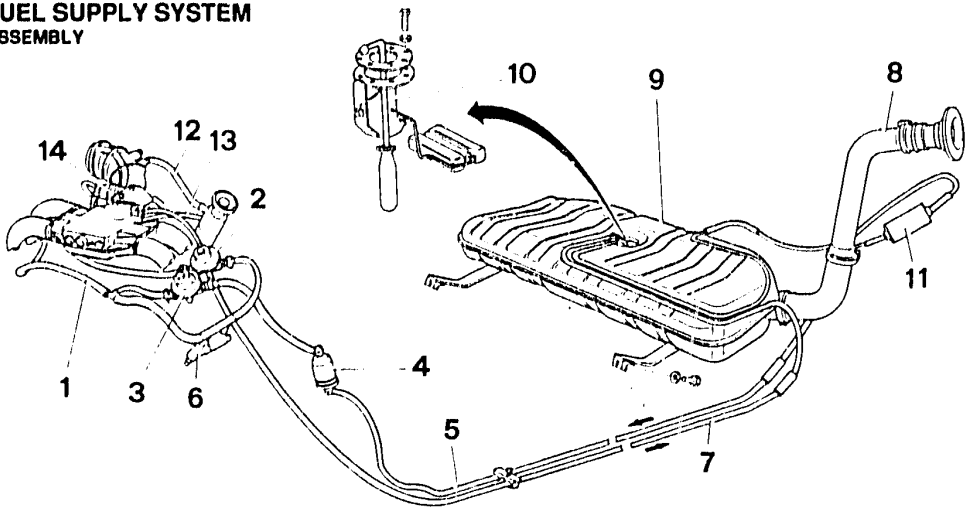

1. Fuel supply manifold
2. Pressure regulator
3. Impulse dashpot
4. Fuel filter
5. Fuel delivery hose
6. Electroinjectors
7. Excess fuel return hose
8. Filler neck
9. Tank
10. Fuel level meter assembly
11. Fuel pump
12. Oil vapour recovery hose
13. Idle speed oil vapour recovery hose
14. Throttle body

FUEL PUMP

Removal - Refitting

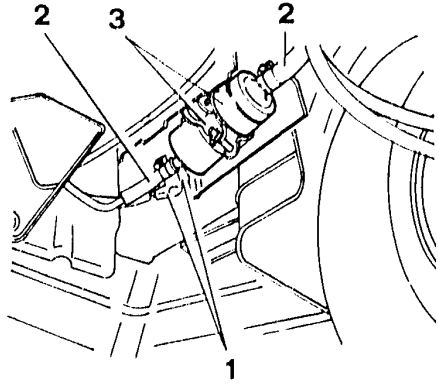

- Place the vehicle on a lift and disconnect the negative cable from the battery.

1. Working under the vehicle, on the rear left hand side, disconnect the pump supply cables.
2. Clamp the fuel pump inlet and outlet hoses, loosen the clamps and detach the hoses from the pump.
3. Loosen the retaining clamps and remove the fuel pump.

FUEL FILTER

Substitution

- Position the vehicle on a lift and raise it.

1. Unhook the clips and remove the plastic protection.
2. Unscrew the connections from the fuel filter inlet and outlet hoses and replace the gaskets.

Plug the connections to prevent the fuel from draining out.

3. Loosen the clamp and remove the filter.

- Fit a new filter and ensure that the arrow stamped on the filter body points in the direction of the fuel delivery.
- Reverse the disassembly procedure to refit the filter.

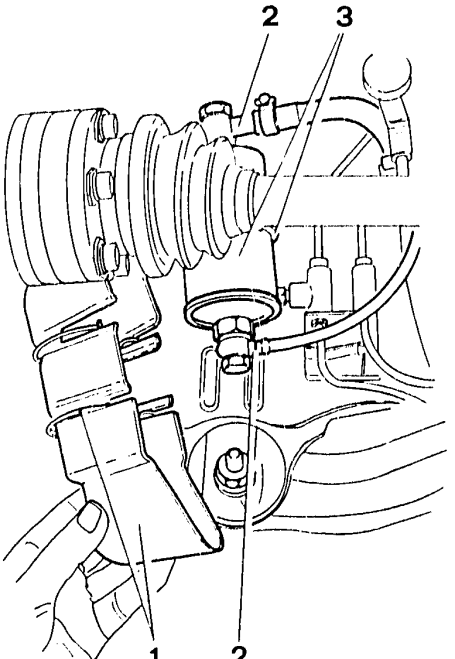

IMPULSE DASHPOT

Removal - Refitting

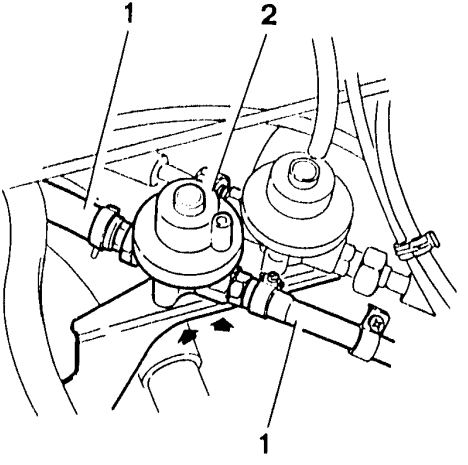

- Remove the air intake box (see specific procedure).

1. Loosen the clamps and disconnect the fuel inlet and outlet hoses from the dashpot.

Operate with caution: the fuel circuit may be under pressure.

2. Loosen the two nuts shown in the illustration and remove the dashpot from its bracket.

During this operation do not allow dirt to enter the hoses as this will negatively affect the injectors.

FUEL PRESSURE REGULATOR

Removal - Refitting

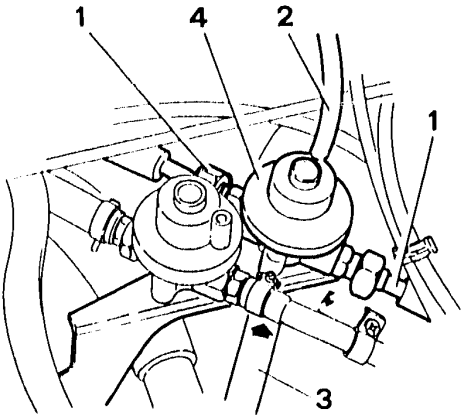

- Remove the air intake box (see specific procedure).

1. Loosen the two connections from the supply manifold and the pressure regulator

Operate with care: the fuel system may be under pressure

2. Disconnect the vacuum intake hose from the regulator
3. Disconnect the excess fuel return hose from the regulator.
4. Loosen the two retaining nuts shown in the illustration and remove the regulator from its bracket.

ELECTROINJECTORS

Removal - Refitting

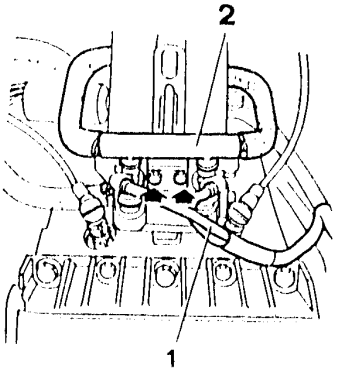

- Disconnect the negative cable from the battery.
1. Disconnect the power supply wiring connectors.
2. Loosen the retaining screws shown in the illustration and lift the supply manifold away from the electroinjectors.
3. Remove the electroinjectors together with their O-rings and gasket.

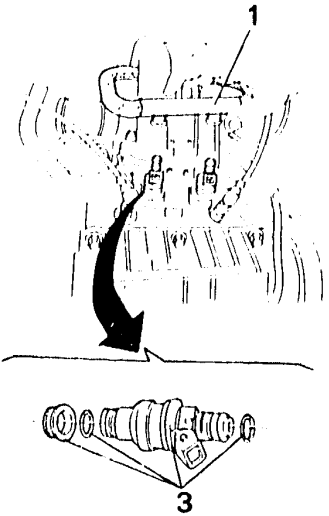

- Refit by reversing the procedure followed for removal and observe the following:
  - replace all the O-rings and gaskets
  - position the electroinjectors so that its connector faces outwards.

CHECKING AND ADJUSTING THE ACCELERATOR CABLE

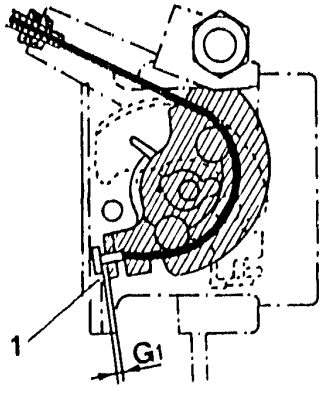

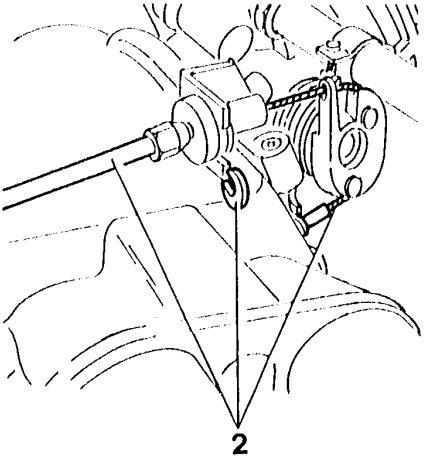

- Check that the accelerator cable runs freely in its sheath.

1. With the accelerator pedal raised, check that the accelerator cable on the control lever has the correct clearance (G_1).

G_1 = 1 - 2 mm

2. If necessary adjust the cable by removing the adjustment clip in order to obtain the correct clearance, and then replace the clip in the new position.

CHECKING AND ADJUSTING THE ACCELERATOR CABLE (continued)

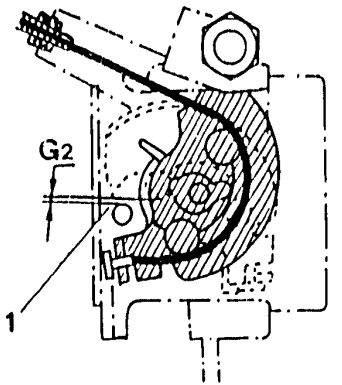

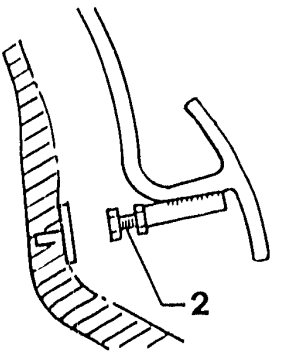

1. With the accelerator pedal at the stop limit check that the accelerator control cam rotates to the specified value G_2.

G_2 = 1 - 2 mm

2. If necessary adjust by acting on the stop limit screw located under the accelerator pedal.

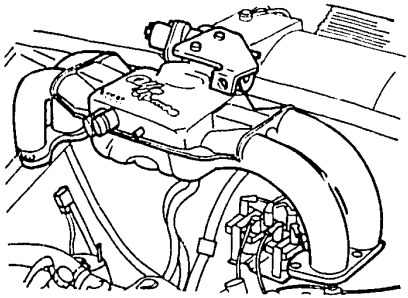

IAW ELECTRONIC INJECTION ENGINE

AIR SUPPLY SYSTEM

AIR SUPPLY SYSTEM

ASSEMBLY....04 - 45
INTAKE MANIFOLD....04 - 46
Removal - Refitting....04 - 46
AIR TEMPERATURE SENSOR....04 - 49
Removal - Refitting....04 - 49
CONSTANT IDLE SPEED ACTUATOR....04 - 50
Removal - Refitting....04 - 50
ABSOLUTE PRESSURE SENSOR....04 - 51
Removal - Refitting....04 - 51
THROTTLE VALVE POTENTIOMETER....04 - 52
Removal - Refitting....04 - 52
Checks and adjustments....04 - 52

AIR SUPPLY SYSTEM

ASSEMBLY

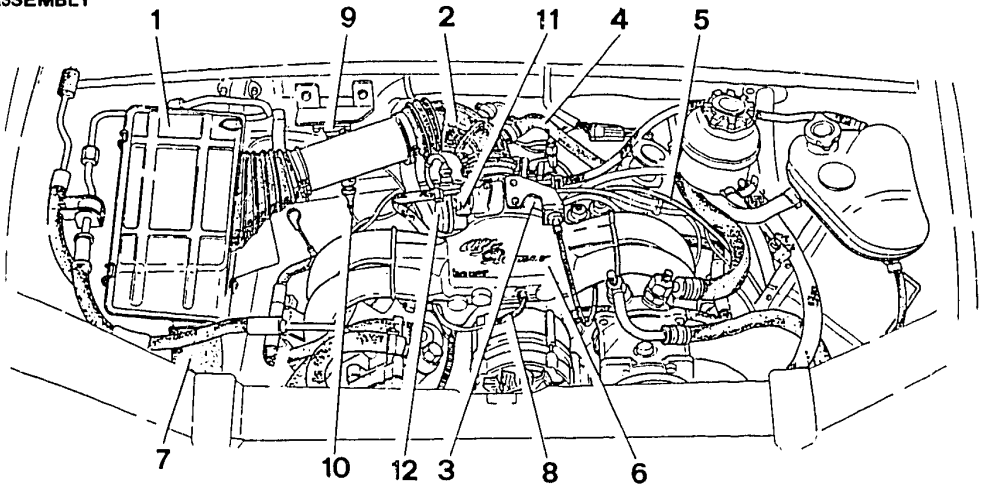

1. Air cleaner
2. Corrugated sleeve
3. Throttle body
4. Oil vapour breather pipe
5. Fuel vapour recirculation hose
6. Air supply manifold
7. Air intake sleeve
8. Vacuum intake hose for absolute pressure sensor
9. Absolute pressure sensor
10. Air temperature sensor
11. Idle speed actuator
12. Throttle valve potentiometer

INTAKE MANIFOLD

Removal - Refitting

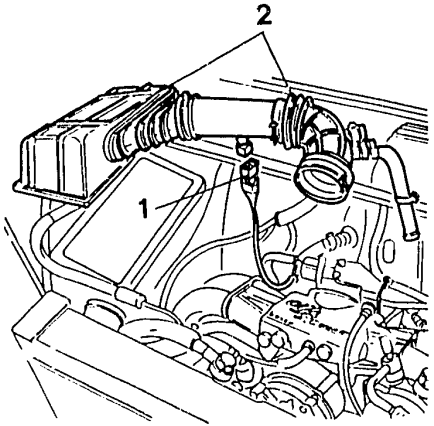

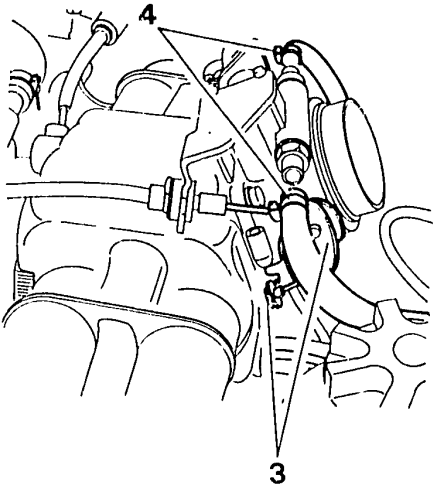

- Disconnect the negative cable from the battery.
1. Disconnect the electrical connection from the air temperature sensor
2. Remove the air cleaner cover and sleeves.
3. Rotate the accelerator control lever and remove the pawl at the end of the cable.
4. Loosen the clamps and disconnect the coolant inlet and outlet sleeves from the throttle body.

⇩

Removal - Refitting (continued)

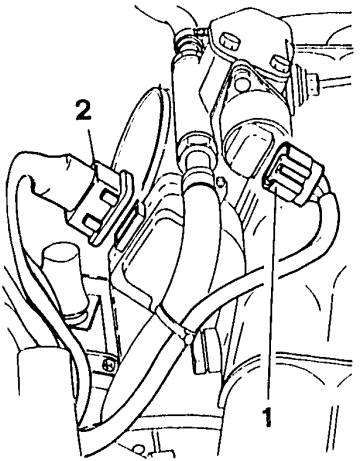

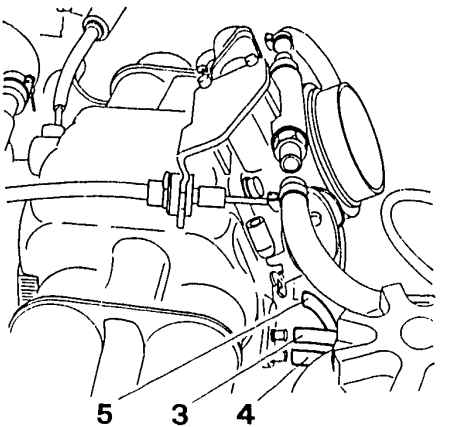

1. Disconnect the connector from the idle speed actuator.
2. Disconnect the connector from the throttle valve potentiometer.
3. Disconnect the vacuum intake hose for the pressure regulator.
4. Disconnect the fuel vapour suction hose.
5. Disconnect the idle blow-by hose from the vacuum intake under the throttle body.

⇩

Removal - Refitting (continued)

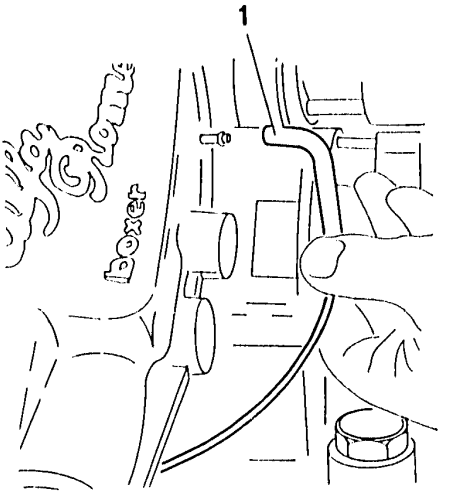

1. Disconnect the vacuum intake hose fro the absolute pressure sensor.

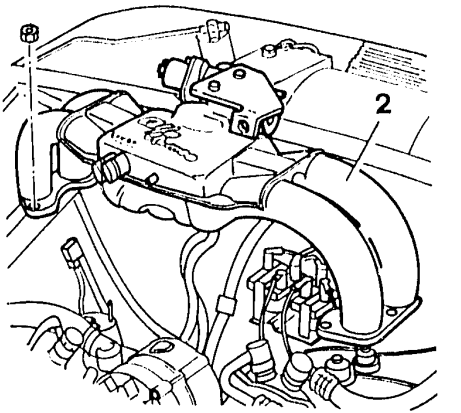

2. Loosen the three nuts on each end of the intake manifold and remove the manifold.
   - If necessary loosen the retaining screws and remove the throttle body from the manifold.

AIR TEMPERATURE SENSOR
Removal - Refitting

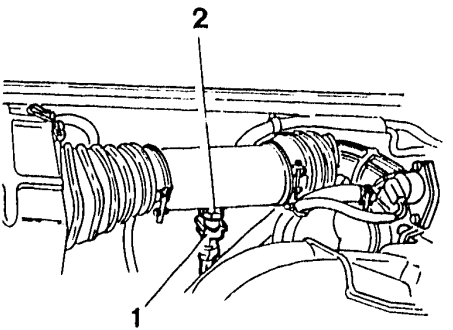

- Disconnect the negative cable from the battery.
1. Disconnect the electrical connection from the air temperature sensor.
2. Remove the air temperature sensor.

CONSTANT IDLE SPEED ACTUATOR

Removal - Refitting

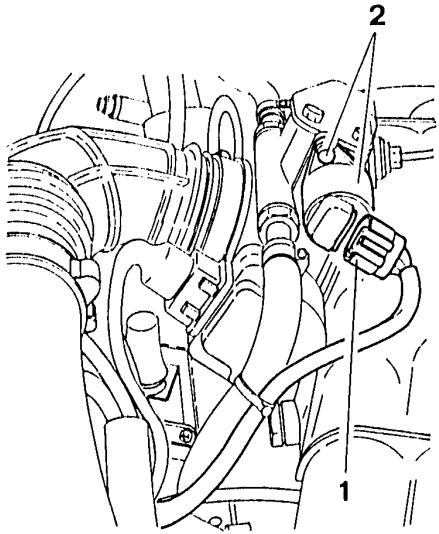

- Disconnect the negative cable from the battery.

1. Disconnect the connector from the idle speed actuator.
2. Unscrew the two screws and remove the idle speed actuator.

- Check that the toroidal seal ring is not damaged and remove any impurities.
- Refit the idle speed actuator without tampering with or forcing the stem on which the tapered actuator is fitted, i.e independent of the original position.
- Fully tighten the retaining screws and connect the connector.
- After approx. 5 minutes reconnect the negative cable of the battery.

NOTE: Respecting the above procedure, the electronic control unit will position the actuator correctly when the engine is started.

ABSOLUTE PRESSURE SENSOR

Removal - Refitting

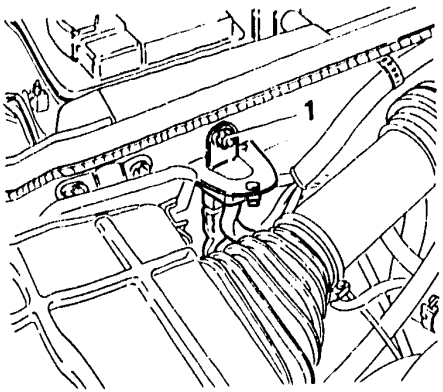

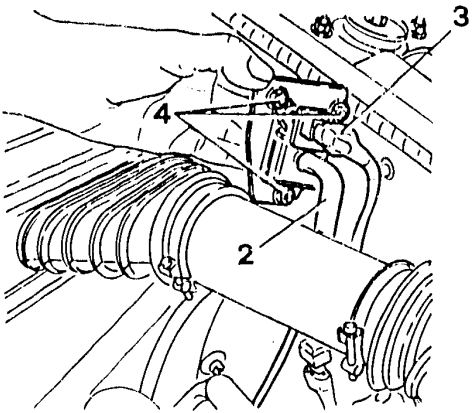

- Disconnect the negative cable from the battery.
1. Loosen the retaining nut and move and twist the absolute pressure sensor with its supporting bracket.
2. Disconnect the vacuum intake hose from the sensor.
3. Disconnect the connector from the absolute pressure sensor.
4. Separate the absolute pressure sensor from its supporting bracket by unscrewing the three retaining nuts.

THROTTLE VALVE POTENTIOMETER

Removal - Refitting

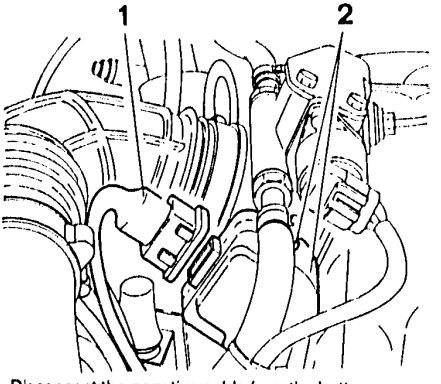

- Disconnect the negative cable from the battery.
1. Disconnect the connector from the throttle valve potentiometer.
2. Unscrew the two screws and remove the throttle valve potentiometer.

NOTE: **When refitting it is necessary to disconnect the injection system fuse from the battery for 5 minutes when the operation has been completed in order to cancel any errors introduced during the diagnosis.**

Checks and adjustments

- Remove the grommet from the electrical connection of the potentiometer.
- Insert the probes of a multimeter into terminals a and b.
- Insert the ignition key and turn it to the MAR position and, with the throttle valve at idle (accelerator cable with specified clearance) check that the voltage is between **120 and 420 mV**.
- Fully open the throttle valve until the lever on the throttle body blocks and check that the voltage is **equal to or lower than 4.83 volts**.

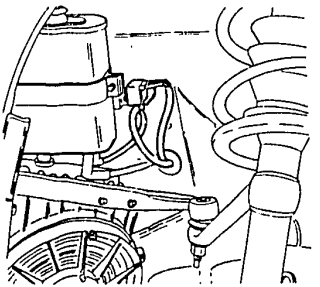

IAW ELECTRONIC INJECTION ENGINE

FUEL VAPOUR EMISSION CONTROL SYSTEM

FUEL VAPOUR EMISSION CONTROL SYSTEM

DESCRIPTION ..... 04 - 53
FUEL VAPOUR SEPARATOR ..... 04 - 55
Removal - Refitting ..... 04 - 55
COMPENSATION VALVE ..... 04 - 56
Removal - Refitting ..... 04 - 56
CONTROL VALVE ..... 04 - 57
Removal - Refitting ..... 04 - 57
FUEL VAPOUR SOLENOID VALVE ..... 04 - 58
Removal - Refitting ..... 04 - 58
FUEL VAPOUR FILTER ..... 04 - 59
Removal - Refitting ..... 04 - 59
SEALING OF THE FUEL VAPOUR EMISSIONS CONTROL SYSTEM ..... 04 - 60

FUEL VAPOUR EMISSION CONTROL SYSTEM

DESCRIPTION

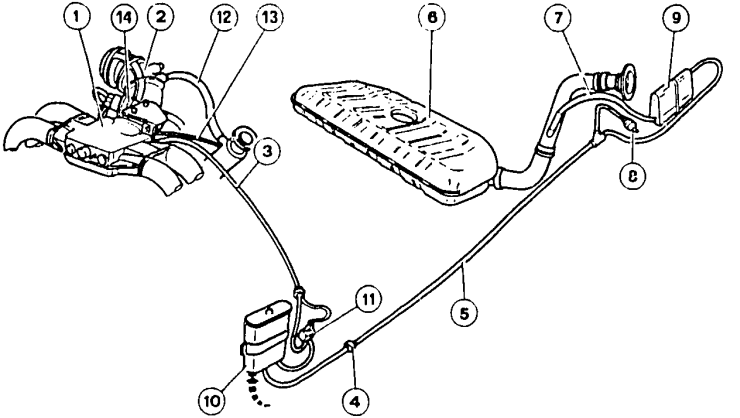

1. Air supply manifold
2. Corrugated sleeve
3. Fuel vapour suction hose
4. Control valve
5. Fuel vapour recovery hose
6. Fuel tank
7. Fuel vapour breather pipe
8. Compensation valve
9. Fuel vapour separator
10. Fuel vapour filter
11. Solenoid valve
12. Idle speed oil vapour recovery hose
13. Oil vapour recovery hose
14. Throttle body

DESCRIPTION (continued)

The fuel vapours emanating from the fuel tank 6 are collected, by way of a hose 7, in a vapour-liquid separator 9 which,, due to its shape, enables the condensed fuel to return to the fuel tank.
A sealed cap on the fuel tank prevents fuel vapour from escaping the system.
The fuel vapours originating from the separator 9 through the upper outlet are conveyed to the fuel vapour filter 10.
In the hose between the separator 9 and the fuel vapour filter 10 there is a control valve 4 which prevents fuel from escaping if the vehicle is overturned.
The flow of fuel vapours to the filter 10 is controlled by a solenoid valve 11 which opens or closes the passage to the intake manifold 1 in accordance with the signal which it receives from the electronic control unit.
If the vacuum is less than the preset value (e.g. engine stopped or at idle speed) the solenoid valve remains closed preventing the flow of vapours from entering the manifold.
Under normal engine operating conditions the flow of vapours reaches the filter 10 and is absorbed by the activated carbon and, due to the effect caused by the difference in pressure the carbon is "washed" by the flow of air passing through the filter through the appropriate hole.
During the washing action the fuel vapours mixed with atmospheric air are conveyed to the supply manifold where they are added to the air supplying the engine.
If when the engine has stopped, the pressure in the tank tends to drop following a drop in temperature, a compensation valve 8 located in the recovery hose 5 between the separator 9 and the vapour filter 10 permits the entry of atmospheric air which keeps the system at atmospheric pressure.

FUEL VAPOUR SEPARATOR

Removal - Refitting

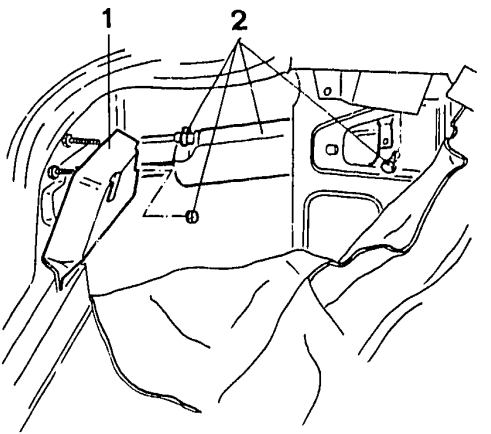

1. Loosen the two screws securing the rear left-hand light protection and lower them.
- Move the left-hand luggage compartment trim to one side.
2. Loosen the front screw and the rear nut, remove the clamps and disconnect the fuel vapour recovery hose and the fuel vapour breather pipe and remove the separator.
- If necessary blow compressed air into the separator to clean it.

NOTE: **To gain access to the front screw securing the separator it is necessary to move the plastic covering from the tray support shelf.**

COMPENSATION VALVE

Removal - Refitting

- Remove the luggage compartment trim just enough to enable the compensation valve to be reached.

1. Disconnect the valve from the fuel vapour recovery system hose.
2. Check that the valve is operating correctly i.e. that it permits the passage of air only in the direction indicated by the arrow. Replace the valve in the event of an anomaly.

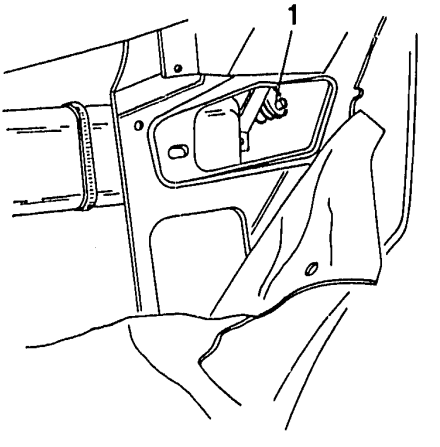

CONTROL VALVE

Removal - Refitting

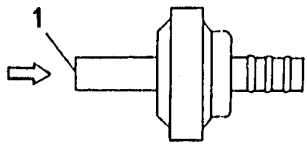

- Disconnect the valve from the hose carrying the fuel vapours to the fuel vapour filter.

1. Check that the valve functions correctly, i.e. that it only permits air to flow in the direction indicated by the arrow. Replace the valve if it is not working correctly.

FUEL VAPOUR SOLENOID VALVE

Removal - Refitting

- Place the vehicle on a lift and support it with appropriate front safety stands.
- Disconnect the negative cable from the battery.
- Remove the front left-hand wheel and wheel-arch.

1. Disconnect the two electrical connections.
2. Disconnect the fuel vapour delivery and arrival hoses from the solenoid valve.
3. Loosen the retaining screw and remove the solenoid valve.

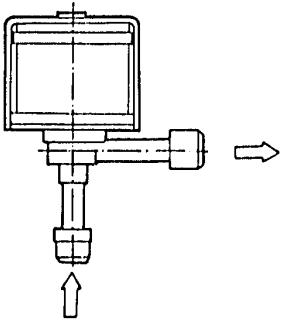

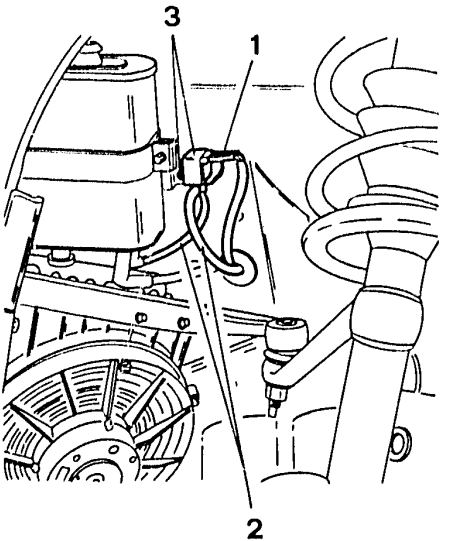

FUEL VAPOUR FILTER

Removal - Refitting

- Place the vehicle on a lift and support it with appropriate front safety stands.
- Remove the front left-hand wheel and wheel-arch.

1. Disconnect the hose in arrival from the separator and the solenoid valve delivery hose from the fuel vapour filter.
2. Loosen the retaining screw securing the plastic clamp and remove the fuel vapour filter.

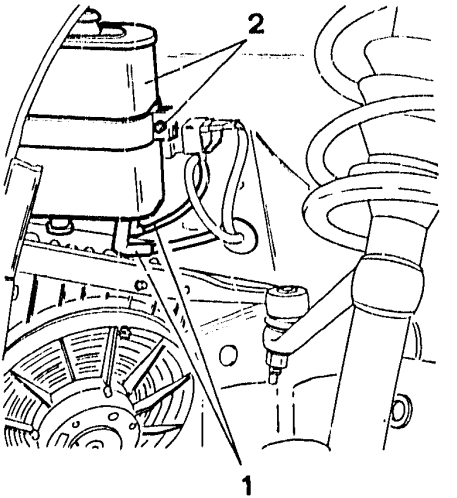

SEALING OF THE FUEL VAPOUR EMISSIONS CONTROL SYSTEM

- To check the sealing use tools N° 1.824.013.000 (C.2.0126) and N° 1.824.020.000 (C.2.0101) composed of manometer A, needle regulation valve B and of the hoses with a "T" connection C.
- Fully tighten the taps of the adapter N° 1.824.013.000 (C.2.0126) and of valve B.

1. Connect the connection of tool N° 1.824.013.000 (C.2.0126) to a supply of compressed air.
2. Connect hose C to the air inlet valve located in the luggage compartment.
3. Acting on adapter N° 1.824.013.000 (C.2.0126) reduce the system pressure to approximately **0.2 bars (20 kPa)**.
4. Slightly open valve B.
5. Acting on adapter N° 1.824.013.000 (C.2.0126) adjust the pressure in the fuel vapour system to: **0.025 bars (2.49 kPa)**, corresponding to **250 mm** on the pressure gauge A.

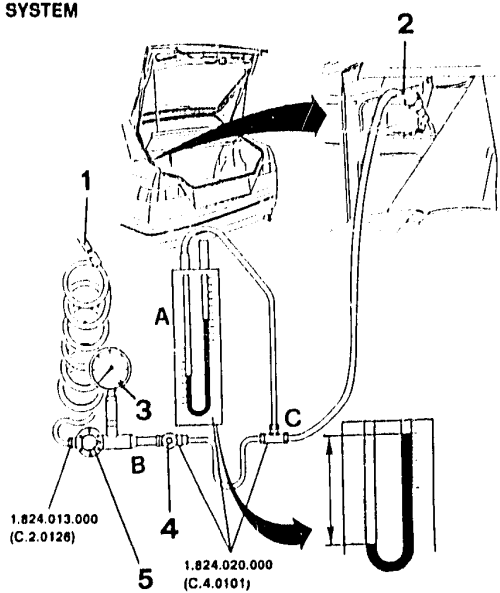

SEALING OF THE FUEL VAPOUR EMISSIONS CONTROL SYSTEM (continued)

1. Wait for approximately **2 minutes** and tighten valve B, stabilizing the pressure in the system to the correct value.
2. Measure the fall in pressure in the system which must not exceed **0.0012 bar (0,12 kPa)** in **10 minutes** i.e. a fall of **12 mm** on the pressure gauge.

- If the fall in pressure exceeds the specified value locate the leak by spraying soapy water on the system connections and joints. Bubbles will form at the site of a leak.
- If necessary replace the faulty components and repeat the test.

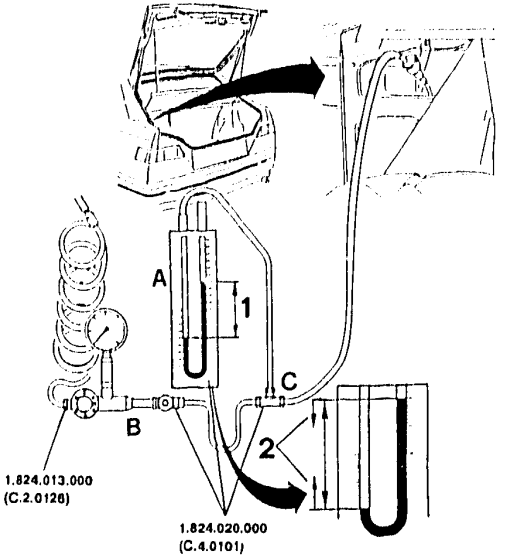

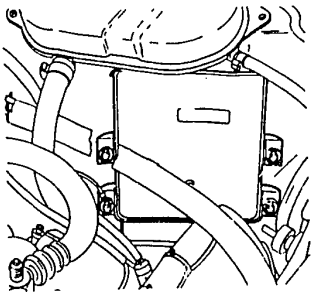

IAW ELECTRONIC INJECTION ENGINE

EXHAUST SYSTEM

ELECTRICAL AND ELECTRONIC COMPONENTS

EXHAUST SYSTEM

ASSEMBLY (for 4x2 models) ..... 04 - 62
ASSEMBLY (for 4x4 models) ..... 04 - 63
LAMBDA PROBE ..... 04 - 64
Removal - Refitting ..... 04 - 64

ELECTRICAL AND ELECTRONIC COMPONENTS

INJECTION - IGNITION CONTROL UNIT ..... 04 - 65
Removal - Refitting ..... 04 - 65
T.D.C. AND R.P.M. SENSOR ..... 04 - 66
Removal - Refitting ..... 04 - 66
Checking air gap ..... 04 - 67

EXHAUST SYSTEM

ASSEMBLY (For 4x2 models)

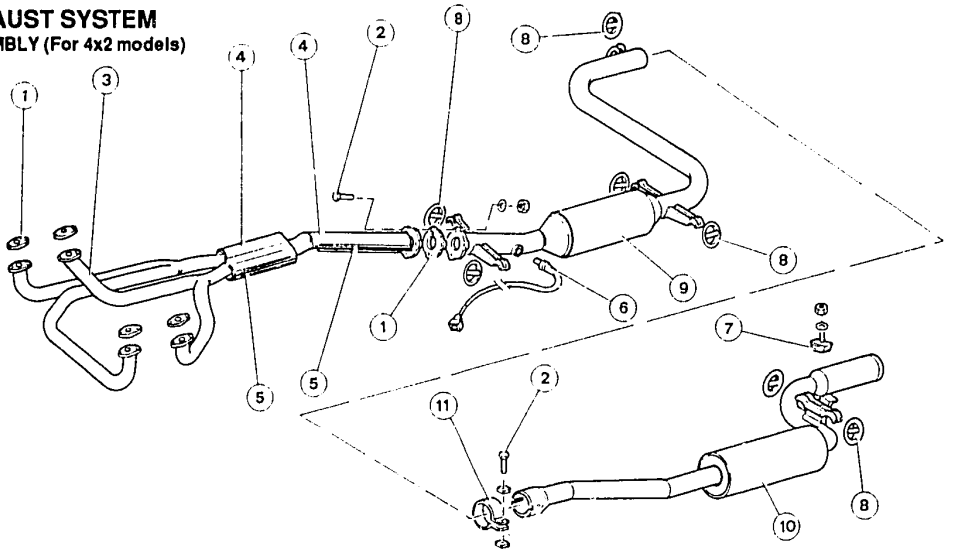

1. Gasket
2. Bolt
3. Exhaust manifold
4. Upper insulation
5. Lower insulation
6. Lambda probe
7. Flexible plug
8. Flexible support ring
9. Catalytic exhaust
10. Rear silencer
11. Clamp

EXHAUST SYSTEM

ASSEMBLY (For 4x4 models)

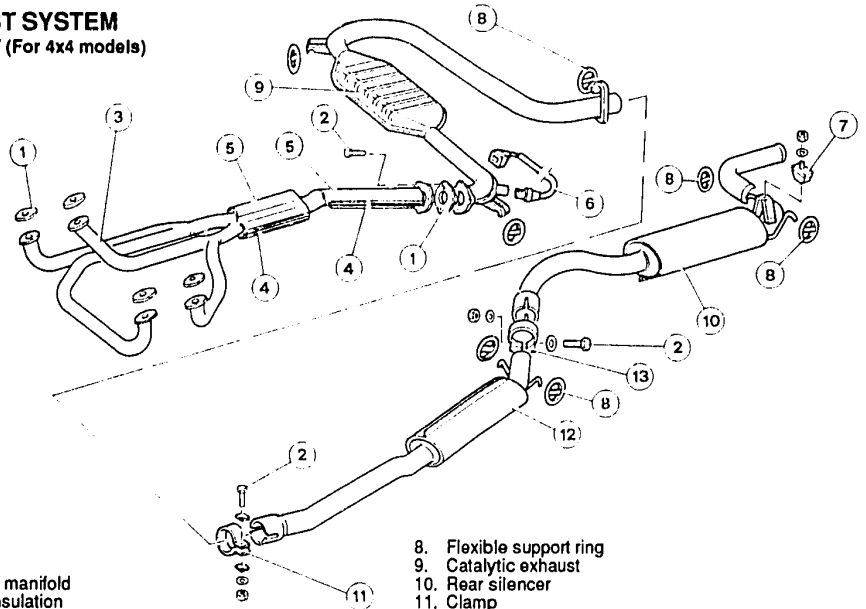

1. Gasket
2. Bolt
3. Exhaust manifold
4. Lower insulation
5. Upper insulation
6. Lambda probe
7. Flexible plug
8. Flexible support ring
9. Catalytic exhaust
10. Rear silencer
11. Clamp
12. Central silencer
13. Clamp

LAMBDA PROBE
Removal - Refitting

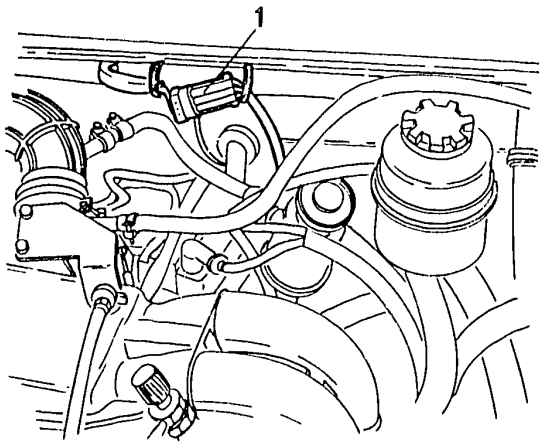

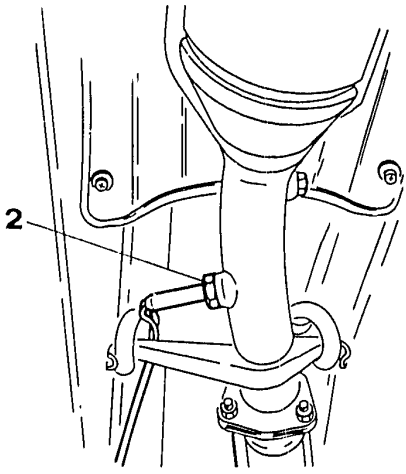

- Place the vehicle on a lift.

1. Working in the engine compartment, disconnect the negative cable from the battery, disconnect the connector from the lambda probe and remove the wiring from the clamps.
2. Working under the vehicle, unscrew and remove the lambda probe.

ELECTRICAL AND ELECTRONIC COMPONENTS

INJECTION - IGNITION CONTROL UNIT

Removal - Refitting

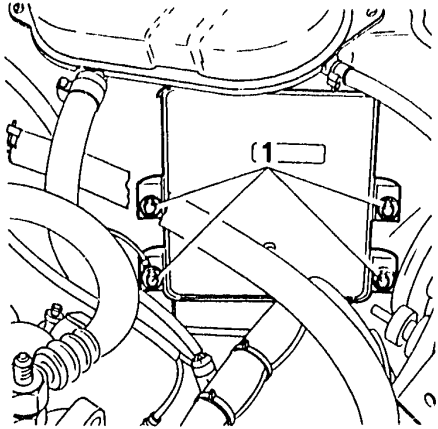

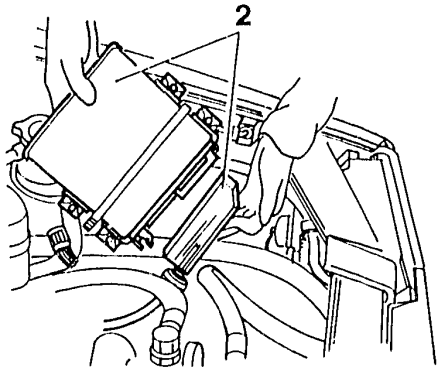

- Disconnect the negative cable from the battery.
1. Loosen the four screws securing the control unit.
2. Move the control unit from its seating and after disconnecting the comb remove the control unit.

T.D.C. AND R.P.M. SENSOR
Removal - Refitting

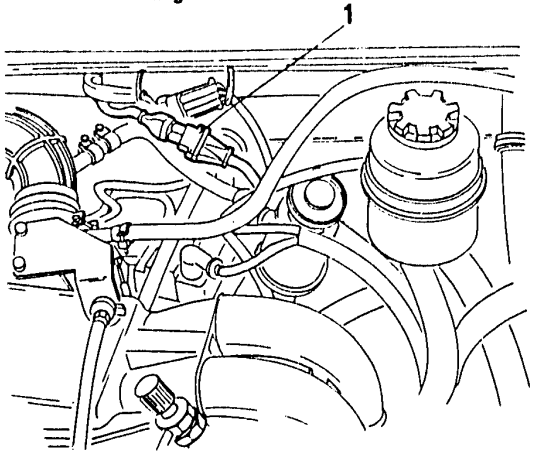

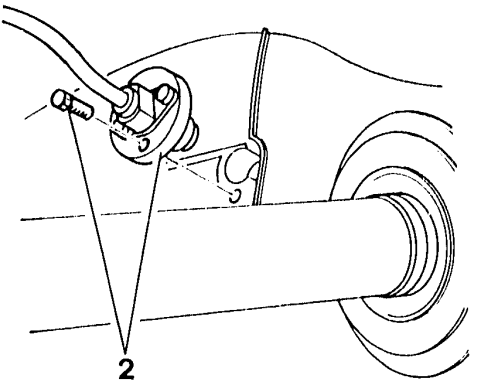

- Position the vehicle on a lift.
- Disconnect the negative cable from the battery.

1. Disconnect the connection from the T.D.C. and r.p.m. sensor located in the engine compartment and remove the wiring from the clamps.
2. Operating under the vehicle remove the sensor by unscrewing the retaining screw.

Ensure that the cable of the T.D.C and r.p.m. sensor is kept away from the high voltage cables.

T.D.C. AND R.P.M. SENSOR (continued)

Checking air gap

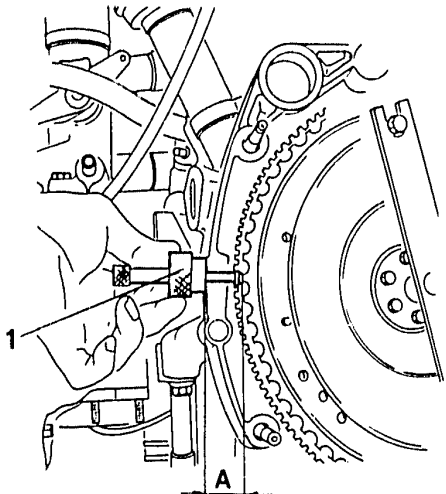

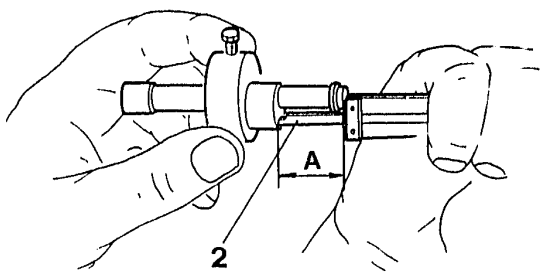

- Remove the T.D.C. and r.p.m. sensor (see specific procedura).

1. Using tool N° 1.820.079.000 (A.2.0449) measure value "A".
2. Using a gauge, measure the value "A".

T.D.C. AND R.P.M. SENSOR
Checking air gap (continued)

1. Using a gauge, measure value "B".
- Calculate the r.p.m. and timing sensor air gap as indicated and check that it is within the specified value.

A-B = 0.5 - 1.5 mm

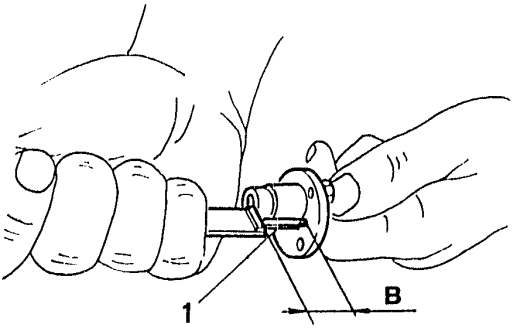

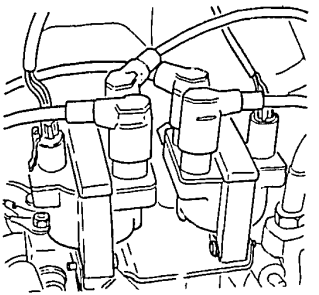

IAW ELECTRONIC INJECTION ENGINE

WARNING

IGNITION COILS

WARNING.....05 - 1

IGNITION COILS
REMOVAL - REFITTING.....05 - 2

WARNING

THE HIGH VOLTAGE STATIC DISTRIBUTION SYSTEM IS DEALT WITH IN GROUP 04 ALONG WITH INJECTION.

IGNITION COILS
REMOVAL - REFITTING

- Disconnect the negative cable from the battery.
- Remove the air cleaner cover together with the corrugated sleeve.

1. Disconnect the two supply connectors.
2. Disconnect the spark plug cables from the ignition coils.
3. Loosen the screws and remove the two ignition coils.

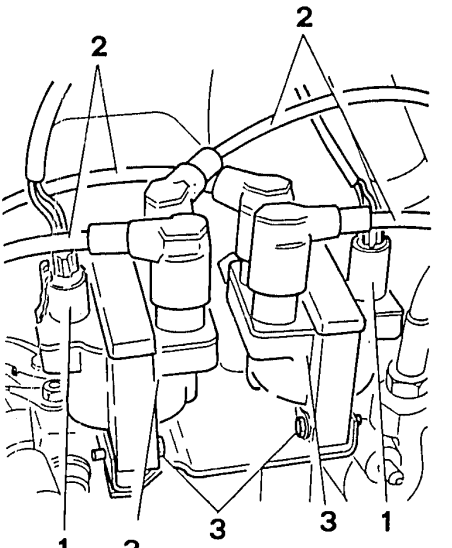

MICROFICHE INDEX Groups: 00-01-04-05
(MOTRONIC MP3.1 electronic injection engines)

Microfiche 15/15



Group 00 - Complete car

WARNING, VIEW OF ENGINE COMPARTMENT, ENGINE MAINTENANCE ..... 00 - A



Group 01 - Engine complete unit

TCS ..... 01 - B



Group 04 - Fuel supply system

MP3.1 INJECTION-IGNITION SYSTEM ..... 04 - C
MP3.1 INJECTION-IGNITION SYSTEM (Continued) ..... 04 - D
FUEL SUPPLY SYSTEM, AIR SUPPLY SYSTEM ..... 04 - E
FUEL VAPOUR EMISSION CONTROL SYSTEM, EXHAUST SYSTEM, ELECTRICAL - ELECTRONIC COMPONENTS ..... 04 - F



Group 05 - Starting, charging system

WARNING, IGNITION COIL, IGNITION MODULE ..... 05 - G

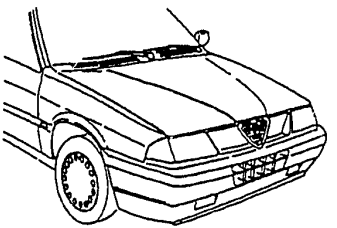

MOTRONIC MP3.1 ELECTRONIC INJECTION ENGINES

WARNING

VIEW OF ENGINE COMPARTMENT

ENGINE MAINTENANCE

WARNING.....00 - 1
VIEW OF ENGINE COMPARTMENT.....00 - 2
ENGINE MAINTENANCE
CHECKING AND REPLACING AIR CLEANER CARTRIDGE.....00 - 3
REPLACING ENGINE OIL AND FILTER.....00 - 4
CHECKING FUEL DELIVERY PRESSURE.....00 - 7
CHECKING EXHAUST EMISSIONS.....00 - 8

WARNING

THE DESCRIPTIONS, TECHNICAL CHARACTERISTICS AND ALL THE MAINTENANCE AND OVERHAUL OPERATIONS SPECIFIC TO THIS MODEL ARE GIVEN BELOW.
FOR ANY INFORMATION NOT GIVEN IN THE PROCEDURES RELATIVE TO THE LE3-JETRONIC ELECTRONIC INJECTION MODELS ARE APPLICABLE EXCEPT FOR THOSE GIVEN IN MICROFICHES 1 AND 11.

VIEW OF ENGINE COMPARTMENT

1. *Air cleaner*
2. *Pressure regulator*
3. *Dashpot*
4. *Lambda probe connectors*
5. *Oil vapour breather pipe*
6. *Oil vapour separator*
7. *Constant idle speed actuator*
8. *Electroinjector*
9. *Secondary relay (injection)*
10. *Main relay (injection)*
11. *Fuse for injection system*
12. *r.p.m. and timing sensor connector*
13. *Ignition module*
14. *Ignition coil*
15. *Air temperature sensor*
16. *Throttle valve potentiometer*

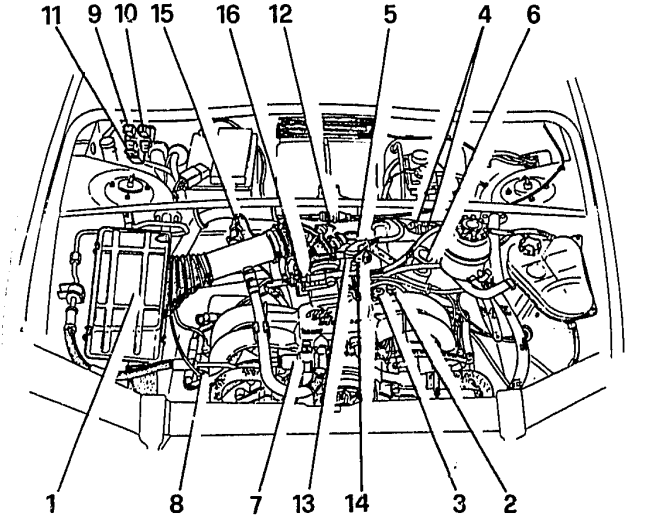

ENGINE MAINTENANCE

CHECKING AND REPLACING AIR CLEANER CARTRIDGE

1. Unhook the clips securing the cover to the container.
2. Raise the cover just enough to remove the filter cartridge.

During this operation avoid damaging the corrugated sleeve and the intake air temperature sensor wiring.

3. Remove and clean the cartridge with low pressure compressed air in the opposite direction to the normal flow of air within the filter. Replace the cartridge if necessary.
— Clean the cartridge container.
— Insert the cartridge in the container positioning the protruding part downwards and then hook the cover back on.

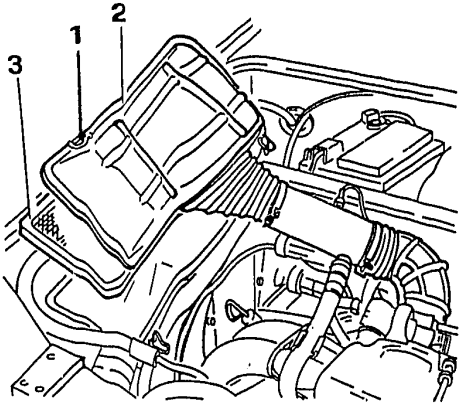

REPLACING ENGINE OIL AND FILTER

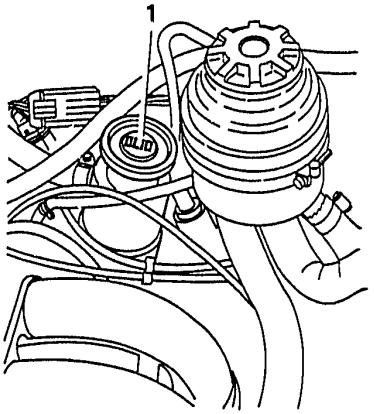

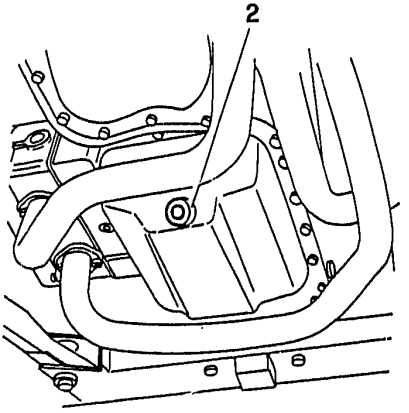

– Place the vehicle on a lift.
– Disconnect the negative cable from the battery.
1. When the engine is warm, remove the filler cap.

2. Unscrew the cap from the oil sump and allow the oil to drain off into a suitable container for at least 15 minutes.

⇩

REPLACING ENGINE OIL AND FILTER (Continued)

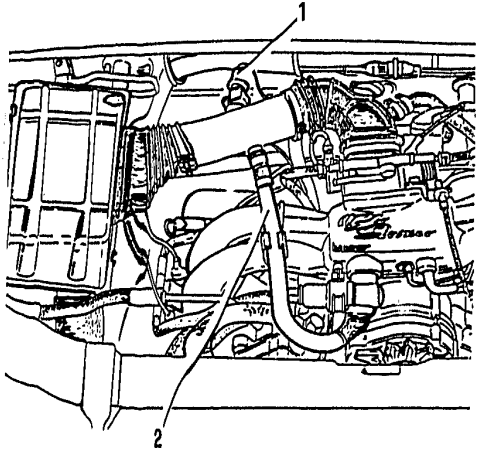

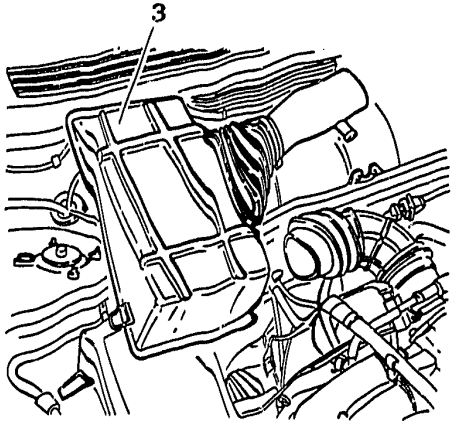

1. Disconnect the electrical connection from the intake air temperature sensor.
2. Disconnect the air intake hose for the constant idle speed actuator from the intake manifold.
3. Remove the air cleaner cover along with the intake manifold.

⇩

REPLACING ENGINE OIL AND FILTER (Continued)

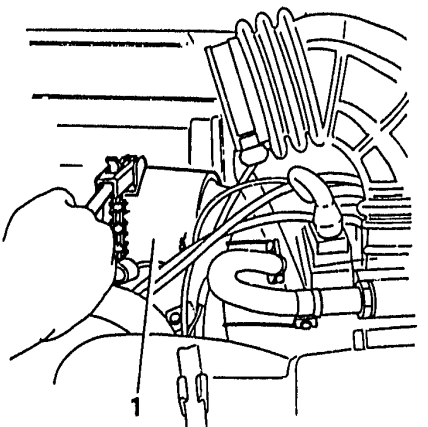

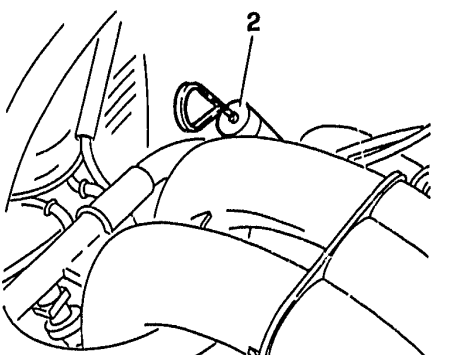

1. Remove the oil filter using the appropriate spanner.
- Clean the oil sump cap and screw it back on.
- Moisten the gasket of the new oil filter and hand tighten it into position.
- Refill the engine with the type and in the quantity indicated.
2. Check the level of the oil with the dipstick.

CHECKING FUEL DELIVERY PRESSURE

1. Disconnect the fuel delivery hose in front of the dashpot.
2. Using a T union connect a pressure gauge between the dashpot and the previously disconnected hose.
3. Detach the pressure regulator vacuum intake to prevent irregularities in idle speed from influencing the reading.

- Start the engine and, at idle speed, check that the pressure is within the specified limits:

	3.0 ± 0.05 bar

- Connect the vacuum intake hose to the regulator and at idle speed check that the fuel pressure falls by about 0.4 bar and then rises again when the throttle valve opens. If this does not happen look for leaked in the vacuum intake hose.

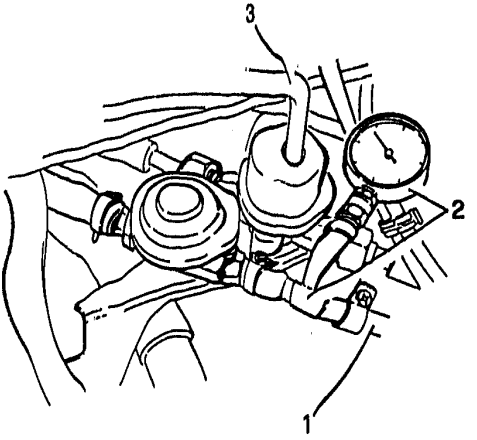

CHECKING EXHAUST EMISSIONS

- Perform the following preliminary checks:
  - check the ECU parameters
  - clean, or if necessary replace the air cleaner
  - check the efficiency of the ignition system: spark plugs, cables, ignition coils
  - check the adjustment of the accelerator cable
- Switch on the toxic exhaust gas extractor, start the engine an run it until it reaches normal operating temperature (as normal).

1. Using a suitable exhaust gas analyzer when the entire is at idle speed, check that the percentage of CO and the quantity of unburnt hydrocarbons (HC) leaving the exhaust pipe are below the specified limits.

- If the values measured are above these limits, the cause may lie in the supply or in an inefficient lambda probe and/or catalytic exhaust system.

The exhaust emissions on this injection system cannot be adjusted.

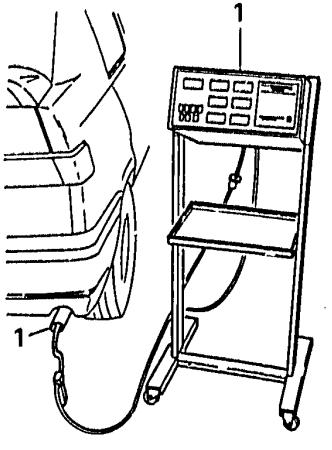

Idle speed	r.p.m.	850 ± 50
CO at exhaust	% in vol.	≤ 0.2
HC at exhaust	p.p.m.	≤ 70

MOTRONIC MP3.1 ELECTRONIC INJECTION ENGINES

TCS

TECHNICAL CHARACTERISTICS AND SPECIFICATIONS

TECHNICAL CHARACTERISTICS AND SPECIFICATIONS

ENGINE SPECIFICATIONS.....01 - 1

TECHNICAL CHARACTERISTICS AND SPECIFICATIONS

ENGINE SPECIFICATIONS

ENGINE		30751	30737
Cycle		Otto four stroke	
Number and arrangement of cylinders		4 horizontal opposing	
Supply		Electronic injection MP 3.1	
Bore - stroke	mm	84 x 67,2	87 x 72
Cubic capacity	cm^3	1490	1712
Volume of combustion chamber	cm^3	44	49,5
Compression ratio		9,5:1	9,5:1
Maximum HP	CV DIN (KW CEE)	97 (70) at 6000 r.p.m.	107 (77) at 5800 r.p.m.
Maximum torque	kgm DIN (Nm CEE)	13 (125) at 4500 r.p.m.	15,2 (145) at 4500 r.p.m.

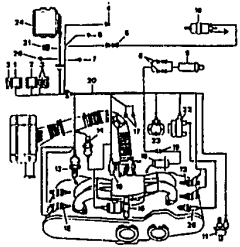

MOTRONIC MP3.1 ELECTRONIC INJECTION ENGINES

MP3.1 INJECTION-IGNITION SYSTEM

MP3.1 INJECTION-IGNITION SYSTEM

PRINCIPLES OF OPERATIONS....04 - 1
Functional diagram....04 - 2
Injection - ignition system wiring diagram....04 - 3
FUEL PUMP....04 - 4
FUEL FILTER....04 - 5
FUEL PRESSURE REGULATOR....04 - 6
IMPULSE DASHPOT....04 - 7
ELECTROINJECTORS....04 - 8
FUEL VAPOUR EMISSION CONTROL SYSTEM....04 - 9
Assembly....04 - 9
Description....04 - 10
ABSOLUTE PRESSURE SENSOR....04 - 12
R.P.M. AND TIMING SENSOR....04 - 13
COOLANT TEMPERATURE SENSOR....04 - 14
AIR TEMPERATURE SENSOR....04 - 15
THROTTLE BODY- THROTTLE VALVE POTENTIOMETER....04 - 16
IDLE SPEED ACTUATOR....04 - 17

MP3.1 INJECTION-IGNITION SYSTEM

PRINCIPLES OF OPERATION

Injection is of the pressure/speed type and the four injectors are simultaneously controlled. The system is of the closed circuit type to obtain the highest resolution efficiency of the pollutants through an oxygen probe and a trivalent catalyzer. The quantity of fuel injected is controlled by the opening times of the electroinjectors. This time is established with a calculation based on the information supplied by the various sensors.

During normal operation (stable r.p.m.) the opening times of the injectors depends on the level of engine loading (measured by the pressure sensor and corrected on the basis of the air temperature) and on the rotational speed of the engine (measured by the r.p.m. sensor). These two conditions define the quantity of intake air. The injection time refers to a base map which takes into account all the operating conditions of the engine and is corrected on the basis of the thermal state of the engine shown by the water temperature and by the operating conditions like the altimetric pressure, battery voltage, variations in loading on the lambda probe etc.

Engine r.p.m. and the absolute pressure in the intake manifold also make it possible to calculate the optimal ignition advance for each engine condition.

The r.p.m and the temperature of the engine coolant are used to keep the **minimum rotational speed** constant when the engine is warming and when the various electrical accessories are switched on.

The idle speed actuator, installed on the intake box, regulates the quantity of air taken in by the engine in order to ensure that the idle speed stabilizes at the value established by the control unit.

PRINCIPLES OF OPERATION (Continued)

Functional diagram

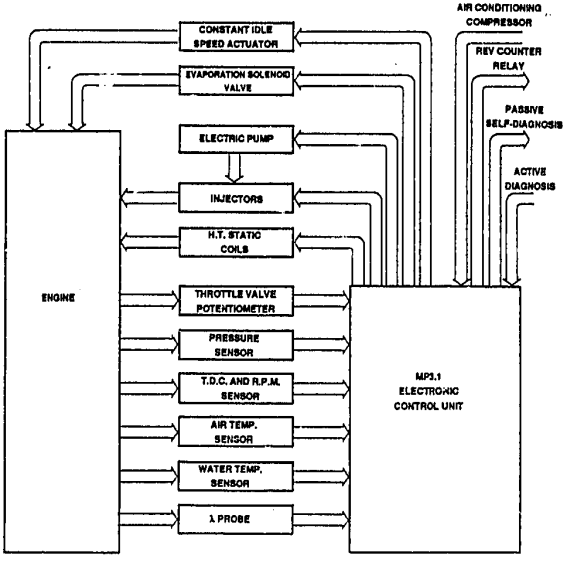

PRINCIPLES OF OPERATION (Continued)

Injection - ignition system wiring diagram

1. Main relay
2. Secondary relay
3. Fuse for injection system
4. Air conditioner wiring connection
5. Rev counter signal connection
6. Dashboard wiring connection
7. Battery (+)
8. Connection for lambda probe
9. Heated lambda probe
10. Electric fuel pump
11. Evaporation solenoid valve
12. Electroinjectors
13. Water temperature sensor
14. Air temperature sensor
15. Throttle valve potentiometer
16. Constant idle speed actuator
17. Centralized earths
18. Engine r.p.m. and timing sensor
19. Engine r.p.m. and timing sensor connection
20. Electronic injection wiring
21. Connection for ALFA ROMEO TESTER
22. Ignition coil
23. Power module
24. Ignition and injection control unit (ECU)
25. Spark plugs
26. Switch connection for 1.5 - 1.7 engines

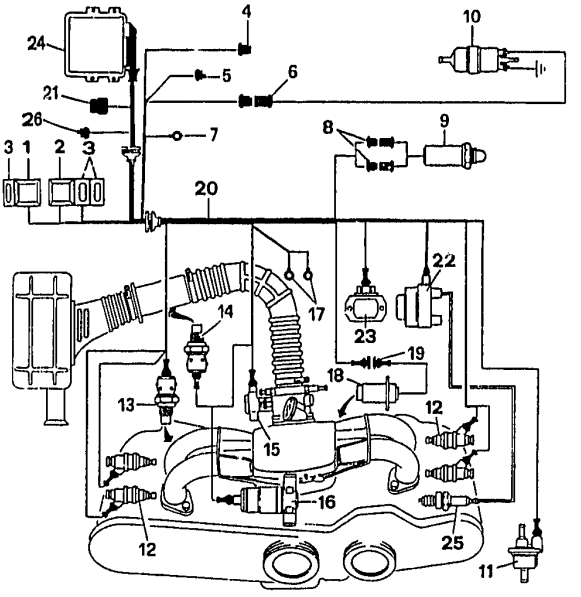

FUEL PUMP

The pump is of the volumetric roller type. When the rotor (2) is turned by the motor, volumes are created which move from the intake port (1) to the delivery port (5). These volumes are confined by rollers (4) which adhere to the outer ring during rotation.
A non-return valve is also present (3) which is necessary to prevent the fuel system from emptying when the pump is not in operation.
A pressure release valve (6) by-passes the delivery by suction if the pressure exceeds **5 bars**, thus preventing the electric motor from overheating. The electrical part is composed of an induction with a hollow shaft which is activated by permanent ceramic magnets.
This solution carries various advantages:
- location outside the fuel tank
- contained operating temperature due to the constant flow of fuel which in addition to cooling also acts as a detergent on the brushes of the manifold.

A few manufacturing devices prevent the electrostatic currents from forming thus reducing radio interference.
The sockets for the power supply are polarized to prevent possible inversion of the connections.
The control unit controls the pump when the engine (during starting) exceeds **20 r.p.m.**.

1. Intake port
2. Rotor
3. Non-return valve
4. Rollers
5. Delivery port
6. Pressure release valve

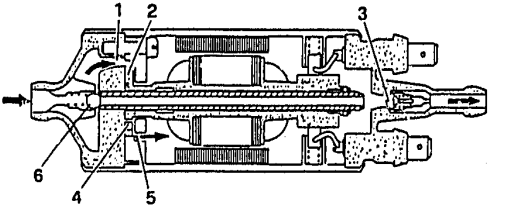

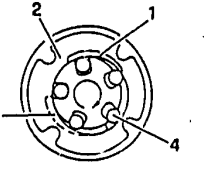

FUEL FILTER

The filter in the fuel circuit eliminates foreign particles and impurities in the fuel. This is necessary as the injectors are extremely sensitive to solid particles.
In order to do this it is fitted between the intake pump and the fuel manifold and an arrow is stamped onto the outer casing which indicates the direction in which the fuel flows.
The filter is fitted with a paper filter element with a surface area of about 1,400 cm^2 ; its filtering capacity is about 5 µm.
The drop in pressure between the fuel inlet and outlet must be:

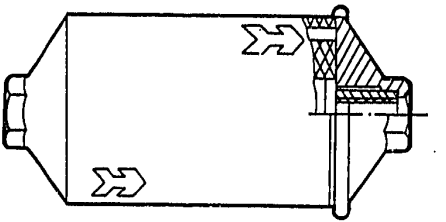

FUEL PRESSURE REGULATOR

The fuel pressure regulator keeps the difference in fuel pressure and the pressure in the intake manifold at a constant level. In this way it is possible to meter the amount of fuel on the basis of the opening times of the electroinjectors only. The fuel pressure regulator is installed upstream of the fuel separator hose.
It is a limiting regulator controlled by a diaphragm which regulates the fuel pressure to **3 bars**. When the pressure of the fuel exceeds the maximum value the diaphragm acts on a valve which opens the return piping through which the excess fuel is returned to the tank. A small pipe connects the regulator spring chamber to the intake box and intake port downstream of the throttle valves. An interdependence is created by this tube between the pressure in the fuel system and the pressure in the intake box so that the pressure between inlet and outlet of the electroinjectors when open, is always the same.

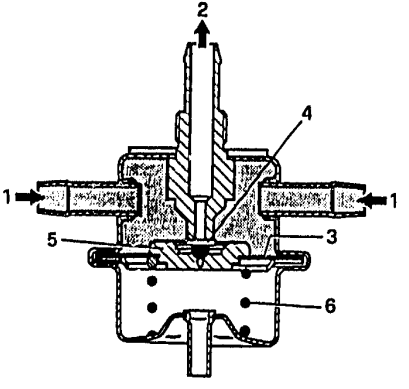

1. Fuel inlet
2. Fuel return to tank
3. Diaphragm
4. Valve
5. Valve holder body
6. Compression spring
7. Attachment for vacuum intake with intake box

AIR
FUEL

IMPULSE DASHPOT

The impulse dashpot is located upstream of the fuel separator pipe and its function is to suppress the noise which may be created by the pulsations especially when the revs are low.
The pulsations are generated by pressure peaking of the fuel arising from the opening and closing of the electroinjectors or pressure regulator.

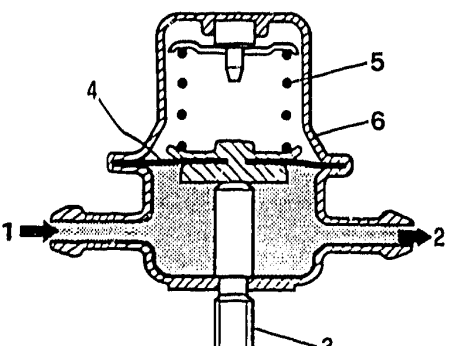

1. Fuel inlet
2. Fuel delivery to separator hose
3. Threaded retaining pin
4. Diaphragm
5. Compression spring
6. Shell

ELECTROINJECTORS

The electroinjectors are installed on the intake ports just behind the intake valve. The nozzle of the injector is such that the jet of fuel forms a cone of 30° as it sprays out.
The electroinjectors are blocked when the fuel manifold presses on them in their seatings in the intake ports.
The electroinjectors are anchored to the fuel manifold by safety clips. Two rubber rings (10) and (11) seal the intake port and duel manifold.
The electroinjectors dose the fuel required by the engine.
They are devices of the "all or nothing" type as they only have two operational states, open or closed.
When they are open they permit the fuel to pass and when they are closed the passage of the fuel is interrupted.
They are basically formed by a nozzle or ring controlled by a solenoid and a return spring (4).
When in the resting position the needle (2) which forms a single unit with the core (3) is pushed by the spring (4) on the tip of the injector (6) so that the hole is closed, guaranteeing a seal which prevents unwanted fuel from leaking through.
As soon as the coil (5) is activated, the core (3) is attracted, compresses the spring and opens the hole in the nozzle allowing fuel to pass through.
Taking the the physical properties of the fuel (viscosity, density) and the pressure peaks (fuel pressure regulator) to be constant, the quantity of fuel to be injected only depends on the opening times of the injector. The activation time of the coil is normally referred to as the "injection time" and is represented by the letters "ti".
The body of the electroinjector is fitted with a bipin for the electrical connection to the system.

1. Body of injector
2. Needle
3. Magnetic winding
4. Helical spring
5. Coil
6. Tip of injector
7. Adjustable push-pull device
8. Fuel filter
9. Socket for electronic connection
10. Rubber vacuum seal ring
11. Rubber fuel seal ring

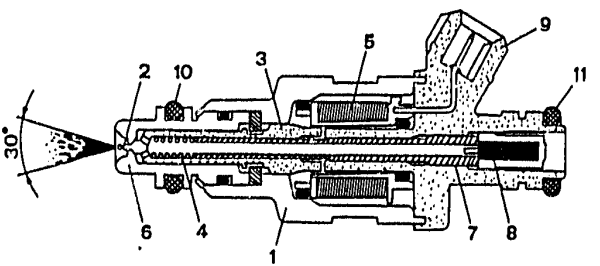

FUEL VAPOUR EMISSION CONTROL SYSTEM

Assembly

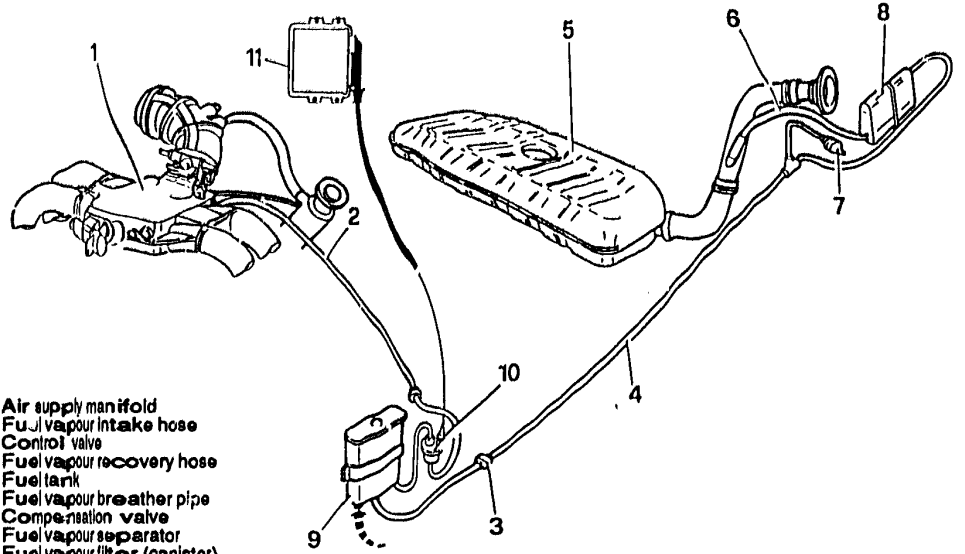

1. Air supply manifold
2. Fuel vapour intake hose
3. Control valve
4. Fuel vapour recovery hose
5. Fuel tank
6. Fuel vapour breather pipe
7. Compensation valve
8. Fuel vapour separator
9. Fuel vapour filter (canister)
10. Evaporation solenoid valve
11. Injection and ignition control unit (ECU)

FUEL VAPOUR EMISSION CONTROL SYSTEM (continued)

Description

The fuel vapours emanated by the tank 5 are collected, via a hose 6 in a vapour-liquid separator 8 which, due to its shape allows the condensed fuel to return to the fuel tank.
To prevent vapour from escaping to the atmosphere there is a sealed cap on the tank.
The fuel vapours originating from the separator 8 through the upper outlet are conveyed to the fuel vapour filter 9.
There is a control valve 3 between the separator 8 and the fuel vapour filter 9 which prevents fuel loss if the vehicle is overturned. The flow of fuel vapours from the filter 9 is controlled by a solenoid valve 10 which is in turn controlled by a duty-cycle to guarantee a passage of ~1% of the intake air delivery.

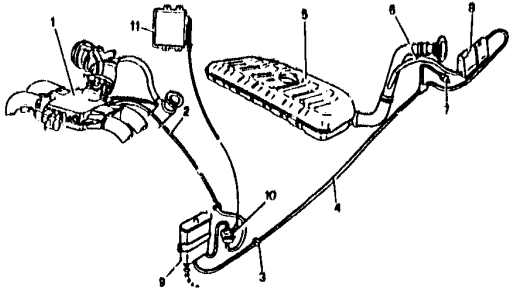

Description (continued)

If the vacuum is below the established minimum (e.g. when the engine is switched off or at idle speed) the solenoid valve remains closed and does not permit the flow of vapours to enter the manifold.
Under normal running conditions, the flow of vapours reaches the filter 9 and is absorbed by the activated carbon and due to the effect created by the difference in pressure the carbon is "washed" by the current of air which flows through the filter through an appropriate hole.
During this "washing" action the fuel vapours, mixed with atmospheric air, are conveyed to the supply manifold where they are added to the air supplying the engine.
If, when the engine is switched off, the pressure in the tank decreases due to the decrease in temperature, a compensation valve 7 located in the recovery hose 4 between the separator 8 and the vapour filter 9 permits the entry of external air thus maintaining the system at atmospheric pressure.

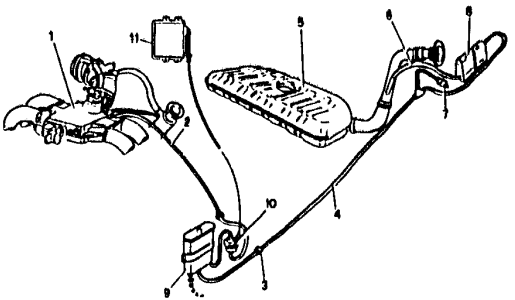

ABSOLUTE PRESSURE SENSOR

The engine loading (catch point) is established by a map stored in the injection control unit which takes into account the pressure measured in the intake box and the engine r.p.m. measured by the appropriate sensor.
The absolute pressure sensor is located inside the injection control unit fitted with an intake hose.
A hose connects the intake box to the injection control unit via a plenum chamber.

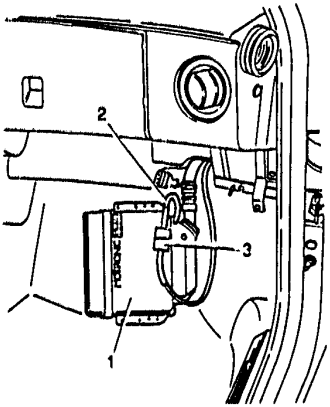

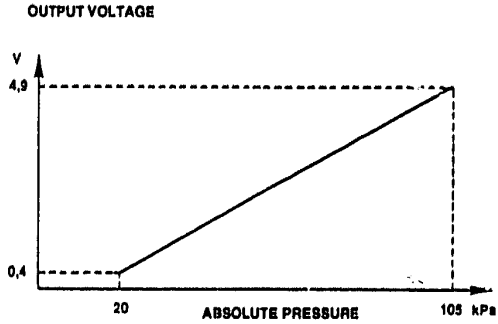

1. Ignition - injection control unit with internal absolute pressure sensor
2. Vacuum intake hose for absolute pressure sensor
3. Plenum chamber

R.P.M. AND TIMING SENSOR

The sensor employed to measure the engine r.p.m. and timing is of the inductance type operating through the variations in the magnetic field generated by the passage of teeth on a pulley (phonic wheel) which is machined onto the flywheel.
The teeth which pass in front of a magnetic field generator cause variations in the air gap between the pulley and the sensor and the the flow which varies as a consequence induces an alternating sinusoidal voltage in the coils. This voltage depends on the peripheral speed of the phonic wheel, on the air gap between tooth and sensor, the form of the teeth, the magnetic characteristics of the sensor and the support system. The output signal which varies between 0.5V and 100V depending on the number of revolutions, is processed by the control unit in order to obtain a signal at each passage for the zero and a rectangular oscillation of a constant size able to permit the digital circuits in the control unit to be controlled. The gap between one tooth and another is 6° apart from the reference notch which is formed by removing two of the 60 teeth from the pulley. The gap created by the removal of these teeth provides the control unit with a reference point for the crankshaft and each successive tooth of the phonic wheel informs the control unit of an increase in its angular position.

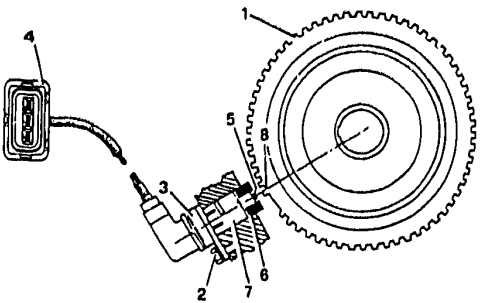

1. Teeth of the phonic wheel
2. Screw securing sensor
3. R.P.M. and timing sensor
4. Induction sensor connection
5. Soft iron core
6. Winding
7. Permanent magnet
8. Timing mark

COOLANT TEMPERATURE SENSOR

This sensor is fitted on the upper part of the engine block.
It is composed of a brass body covering a reaction element composed of a Negative Temperature Coefficient thermistor (electrical resistance decreases as the temperature increases). The NTC thermistor varies its ohmic resistance on the basis of the temperature of the engine coolant as shown in the diagram below.
In this way the engine coolant temperature value can be obtained.

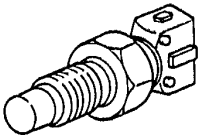

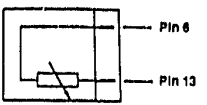

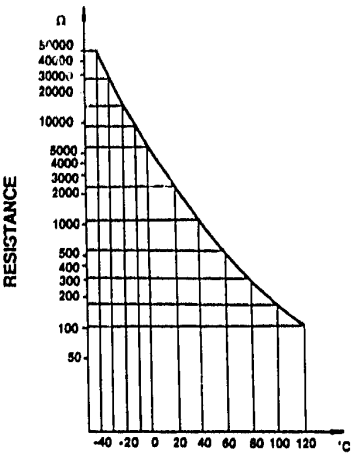

1. *Resistance NTC*
2. *Body*
3. *Connector*

AIR TEMPERATURE SENSOR

This sensor is installed on the intake manifold.
It is composed of a brass body covering a reaction element composed of a Negative Temperature Coefficient thermistor (electrical resistance decreases as the temperature increases). The NTC thermistor varies its ohmic resistance on the basis of the temperature of the air in the manifold as shown in the diagram below.
In this way the intake air temperature value can be obtained.

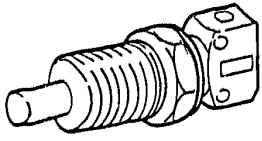

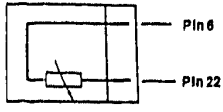

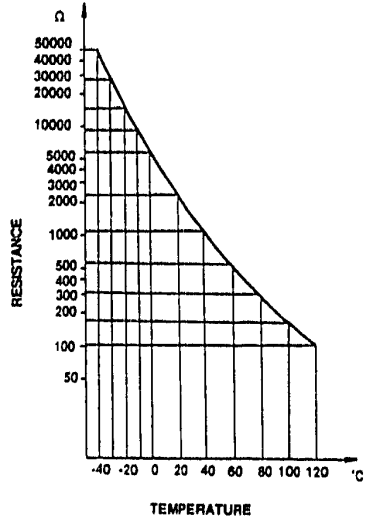

THROTTLE BODY - THROTTLE VALVE POTENTIOMETER

The throttle body regulates the quantity of air sent to the intake box on the basis of the position of the accelerator pedal. The accelerator cable acts on a pulley sector locked onto the rotational pin of the throttle valve.
A spiral spring permits the return of the throttle valve to the closed position. The throttle valve potentiometer is fixed to the rotational pin of the throttle on one side. It is a potentiometer of which the mobile part of directly controlled by a throttle valve shaft.
When it is operating the control unit supplies the potentiometer with a **5 Volt** current applied to pins (1) and (2).
A voltage accumulates on pin (3) which is directly proportional to the position of the throttle valve. Depending on the voltage sent to pin (3) the control unit recognizes the position of the throttle valve.
When the throttle valve is closed an electrical signal of ~ **0.5 Volt** reaches the control unit which recognizes the idle speed and cut-off positions on the basis of the number of engine revolutions.
The potentiometer automatically recognizes the stop limit position at idle speed via an automatic adaptation function. This eliminates the necessity of regulating the potentiometer and makes it possible to follow possible wear over a period of time affecting the position of the throttle valve.
The full load position is recognized by the control unit on the basis of the position of the throttle valve.

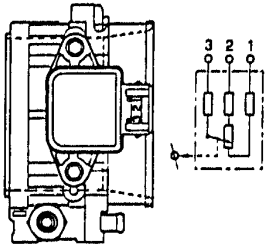

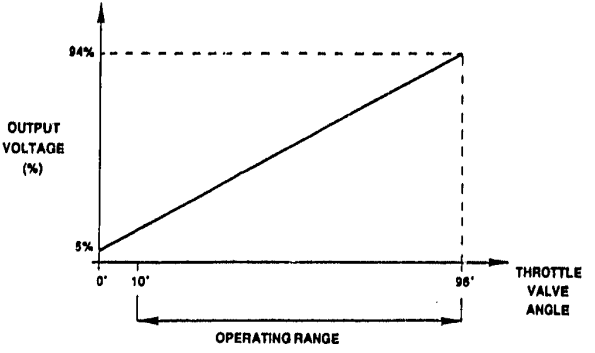

IDLE SPEED ACTUATOR

A flexible hose, which by-passes the throttle valve, incorporates the idle speed actuator. Its cross-section can be adjusted by a rotating pointer and determines the flow of air when the throttle valve is closed.
To control the idle speed a double winding rotational actuator is used. One of the windings moves the rotating pointer towards the open position and the other moves it towards the closed position.
The two coils of the actuator are supplied with two complementary duty-cycle signals which receive voltage and produce opposing forces on the rotating armature.
A definite angular position of the rotating box is obtained for an established number of pulsations, when the battery voltage and temperature of the winding are constant, and therefore the section of the by-pass is opened precisely. The idle speed regulator is piloted by a part of the program stored in the control unit.
The constant idle speed actuator is used above all to establish the exact quantity of air during starting and to maintain an ideal idle speed under all engine running conditions.

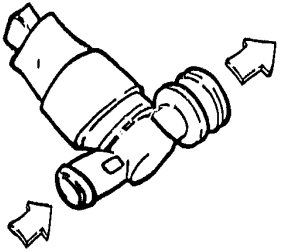

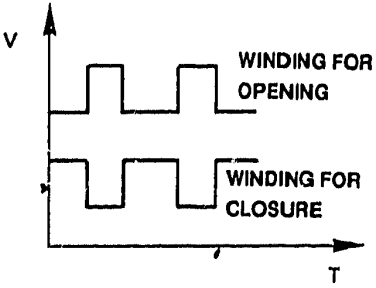

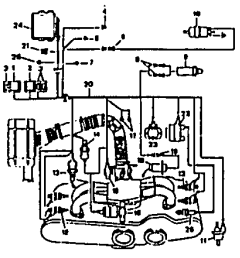

MOTRONIC MP3.1 ELECTRONIC INJECTION ENGINES

MP3.1 INJECTION-IGNITION SYSTEM (Continued)

MP3.1 INJECTION-IGNITION SYSTEM

IGNITION SYSTEM ..... 04 - 18
LAMBDA PROBE ..... 04 - 20
35 PIN CONNECTOR FOR INJECTION CONTROL UNIT ..... 04 - 23
INJECTION - IGNITION WIRING DIAGRAM ..... 04 - 25
Diagram A ..... 04 - 25
Diagram B ..... 04 - 26
KEY TO WIRING DIAGRAM ..... 04 - 27

MP3.1 INJECTION-IGNITION SYSTEM (continued)

IGNITION SYSTEM

The ignition system of the static type is integrated with the injection within the MOTRONIC MP3.1 system.
The static ignition does not require a distributor to supply the high voltage to the spark plugs but employs 2 ignition coils located inside a single unit and controlled by a power module.
Each coil controls two spark plugs of different cylinders (lost spark distribution system).
The most important advantages are:

- greater sparking power
- greater reliability
- reduction in radio disturbance
- small size.

The control unit recognizes the angular position and the speed of the crankshaft via the r.p.m. and timing sensor.
Processing the signals relative to engine loading and temperature it calculates the ignition advance simultaneously piloting the pair of coils via external power modules (for example sparking on the two spark plugs of cylinder number 1 and on the corresponding two on cylinder number 4 is simultaneous).
This solution exploits the different environmental and pressure conditions existing simultaneously in the two pairs of cylinders 1-2, 4-3.

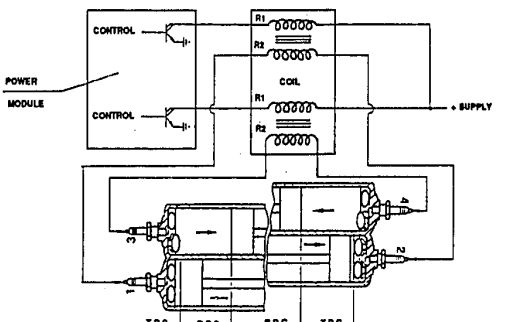

IGNITION SYSTEM (continued)

Under these conditions the energy is transferred from the main winding to the secondary winding of the relevant coil. This transfer instantaneously determines the presence of an induced voltage at the ends of the secondary and will always have the same polarity (one will be negative and the other positive). These potentials will also be assumed by the central electrodes of the spark plugs connected to them.
As the induced voltage on the secondary is always of the same polarity, it follows that the discharge voltage on the coil will strike in opposite directions. On the spark plug with a positively charged central electrode the spark will strike from the earth to the central electrode and on the negatively charged electrode the spark will strike from the central electrode to the earth electrode.
It follows then that if the spark plugs are examined after a few thousand kilometers, the electrodes will show different wear patterns and on one the central electrode will be more worn and on the other the earth electrode will show more signs of wearing.
The intensity of the spark is established by the conditions of the spark plugs themselves.
There will be a weak spark in the cylinder which is at the end of the exhaust phase (lost spark) and an intense spark in the cylinder which is at the end of the compression phase (useful spark) due to the compressed air-fuel mixture.

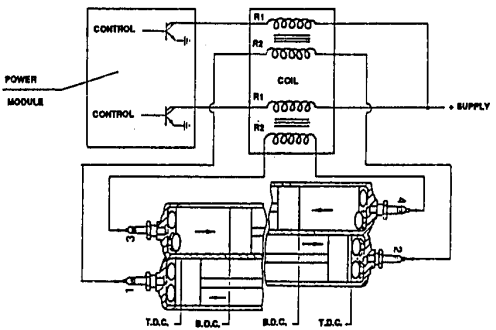

LAMBDA PROBE

The lambda probe, which is in contact with the exhaust gas, generates an electrical signal. The voltage of this signal depends on the concentration of oxygen in the exhaust gas. This voltage is characterized by a brisk variation when the composition of the mixture differs by a value of $\lambda = 1$.
To obtain the optimal mixture the quantity of air taken in by the engine must be the same as the theoretical quantity which would be required to burn all the injected fuel. In this case the Lambda factor (λ) is 1:

$$\lambda = \frac{\text{QUANTITY OF INTAKE AIR}}{\text{THEORETICAL QUANTITY OF AIR REQUIRED TO BURN ALL THE INJECTED FUEL}}$$

Thus:

$\lambda = 1$ IDEAL MIXTURE
$\lambda < 1$ RICH MIXTURE
$\lambda > 1$ LEAN MIXTURE

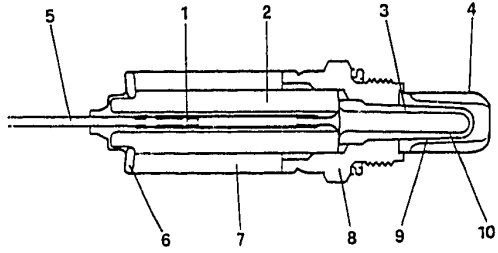

1. Contact
2. Ceramic support
3. Ceramic structure of probe
4. Protective tube (exhaust gas side)
5. Electrical connection
6. Belleville washer
7. Protective sheath (air side)
8. Shell (-)
9. Electrode (-)
10. Electrode (+)

LAMBDA PROBE (continued)

When the probe supplies a low voltage (below **200 mV**) the control unit recognizes that the mixture is lean ($\lambda > 1$) and slightly increases the quantity of injected petrol. When the probe supplies a high voltage (above **800 mV**) the control unit recognizes the rich mixture ($\lambda < 1$) and decreases the the quantity of petrol injected. The lambda probe varies the injection times so that the measurements it makes oscillate between these two voltage values, i.e. the engine works with a lambda factor of between **0.986** and **1.006**, values which are close to the theoretical value of 1. The lambda probe is composed of a ceramic capsule which acts as a support for the platinum electrodes.

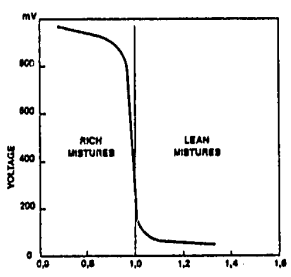

Lambda probe voltage signal

LAMBDA PROBE (continued)

The shape and the installation position of the lambda probe are such that one electrode is in constant contact with the exhaust gasses and the other is in contact with the atmosphere. To prevent the exhaust gasses corroding the electrode, the platinum element is covered with a ceramic layer. A metallic capsule protects the ceramic layer from being damaged by any solid particles present in the gas. One electrode is connected to earth and the other is electrically connected to the control unit. At high temperatures (above 300 °C) the ceramic layer becomes porous and allows the oxygen ions contained in the exhaust gas to pass which are then deposited on the platinum electrode. The oxygen ions in the atmosphere on the other hand are deposited on the other electrode. Due to the different concentration of ions present on the electrodes, isolated from each other by a ceramic support, a difference in potential is created which has a value of around a few hundred mV, a voltage which indicates whether the mixture is lean or rich.
To ensure that the lambda probe reaches its correct operating temperature of 300 °C as fast as possible, a heating resistance has been fitted on the inside of the probe (3 - 20 Ω) which is supplied when the engine is running. In spite of this resistance, the lambda probe will not supply an electrical signal for about a minute after the engine has been switched on. Only FOUR-STAR UNLEADED PETROL must be used as this chemical component (lead) would damage the lambda probe beyond repair.

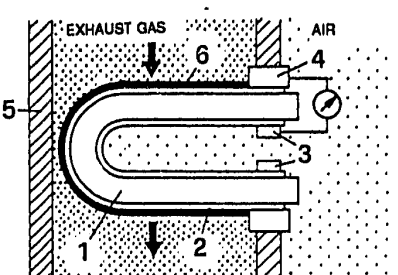

1. Ceramics of the probe
2. Electrode
3. Contacts
4. Contact on shell
5. Exhaust channel
6. Protective layer of ceramic (porous)
7. Electrode

35 PIN CONNECTOR FOR INJECTION CONTROL UNIT

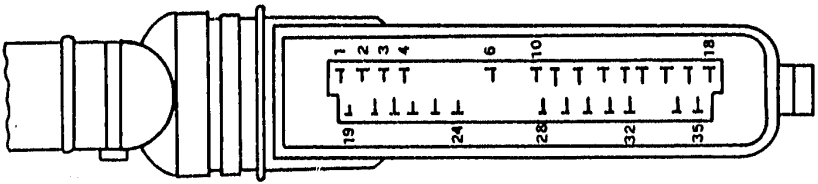

Control unit pin-out function

1 Output for power module/coil (cyl. 1 and 2)
2 Output for power module/coil (cyl. 3 and 4)
3 Input for sensor on throttle body
4 Input for serial line (line L)
5 Power earth
6 Earth for analog sensors
7 Not connected
8 Earth for lambda probe
9 Output for power supply for sensor on throttle body (5V)
10 Input for control unit switch on 1.5 IE - 1.7 IE engines
11 Not connected
12 Output for serial line (line K)
13 Input for engine coolant temperature sensor
14 Output for electroinjectors
15 Not connected
16 Power earth
17 Not connected (flashing code)
18 ECU power supply (continuous)

35 PIN CONNECTOR FOR INJECTION CONTROL UNIT

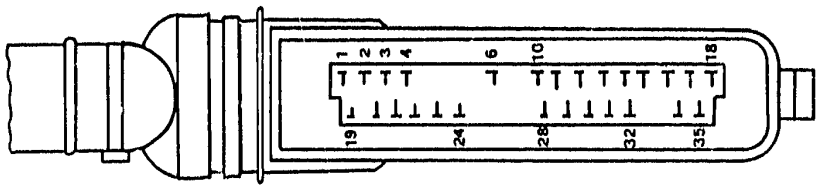

19 Not connected
20 Output for fuel pump relay
21 Output for rev counter signal
22 Input for air temperature sensor
23 Input for r.p.m. and timing sensor (B)
24 Input for lambda probe
25 Input for r.p.m. an timing sensor (A)
26 Not connected
27 Not connected
28 Not connected
29 Input for air conditioner (provision for)
30 Not connected
31 Output for evaporation solenoid valve
32 Input for air conditioner (engaged)
33 Output for idle speed adjustment actuator (opening)
34 Output for idle speed adjustment actuator (closure)
35 ECU power supply (key-operated)

ATTENTION: Voltage may still be present on pins which are not connected therefore no connections must be made which may short-circuit the system and damage the control unit.

INJECTION - IGNITION WIRING DIAGRAM (Diagram A)

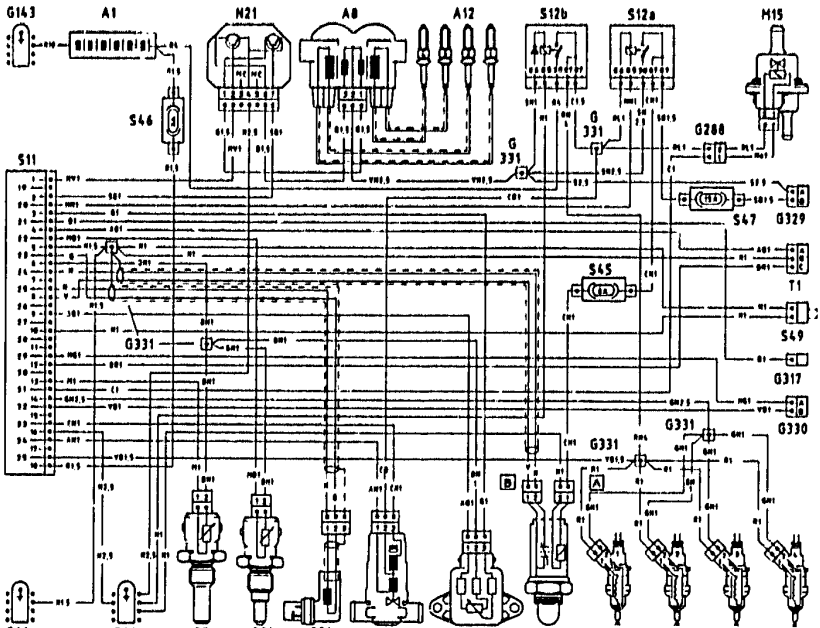

INJECTION - IGNITION WIRING DIAGRAM (Diagram B)

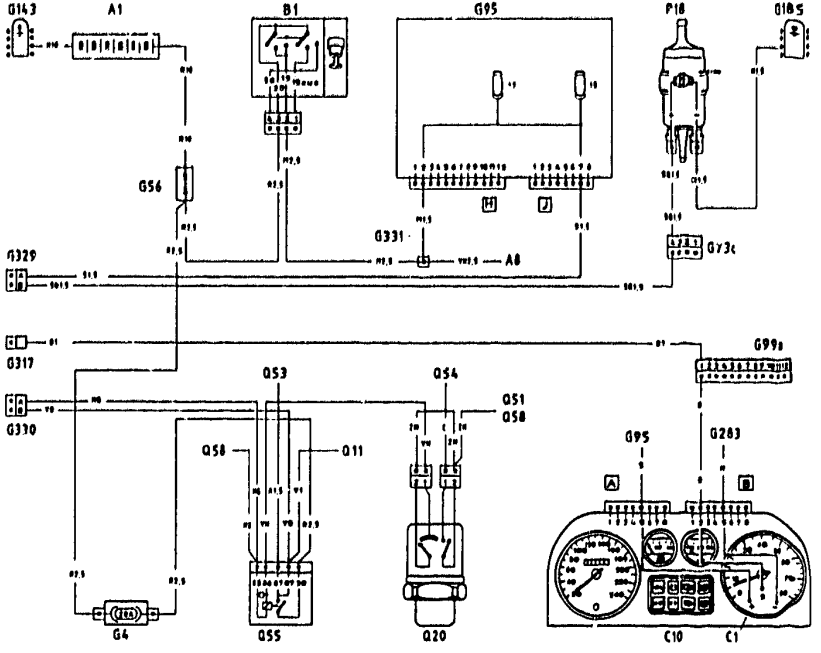

KEY TO WIRING DIAGRAM

A1	Battery
A8	Ignition coil
A12	Spark plugs
B1	Ignition switch
C1	Electronic rev counter
C10	Instrument panel
G4	Free fusebox
G56	Branch terminal board
G66	Motronic wiring earth
G73c	Rear services connection (1-way)
G95	Central fusebox
G99a	Engine dashboard A connection
G143	Earth for central services tank
G185	Luggage compartment earth on left-hand side
G283	Services tank earth on left-hand side
G288	Evaporation solenoid valve wiring - injection wiring connection
G317	Injection wiring rev counter - engine connection
G329	Injection wiring - dashboard wiring connection
G330	Wiring for condenser fans - injection wiring connection
G331	Ultrasound welding connection
M15	Evaporation solenoid valve
N21	Power module
P18a	Main fuel pump
Q11	Compressor electromagnetic coupling
Q20	Minimum and maximum pressure switch (Trinary)
Q51	Potentiometer with switch
Q53	Electric fan for left-hand condenser
Q54	Fan relay for right-hand condenser
Q55	Simultaneous control relay for compressor electromagnetic coupling and left-hand condenser fan
Q58	Electronic thermostat control unit
S7	Engine coolant temperature sensor
S11	Motronic control unit
S12a	Motronic fuel pump relay
S12b	Motronic relay with diode
S14	R.P.M. and timing sensor
S29	Idle speed adjustment actuator
S34	Air temperature sensor
S35	Lambda probe
S38	Sensor on throttle body with potentiometer
S45	Lambda probe wander fuse
S46	Motronic power supply wander fuse
S47	Fuel pump wander fuse
S49	MP 3.1 Control unit switch connector for 1.5 IE - 1.7 IE engines (bridge for 1.7 IE)
T1	Connector for Alfa Romeo Tester

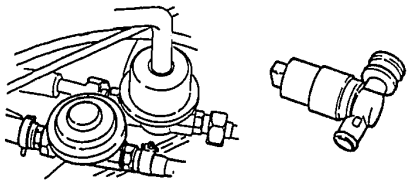

MOTRONIC MP3.1 ELECTRONIC INJECTION ENGINES

- FUEL SUPPLY SYSTEM
- AIR SUPPLY SYSTEM

FUEL SUPPLY SYSTEM

ASSEMBLY....04 - 28
FUEL PUMP....04 - 29
Removal - Refitting....04 - 29
FUEL FILTER....04 - 30
Substitution....04 - 30
DASHPOT....04 - 31
Removal - Refitting....04 - 31
FUEL PRESSURE REGULATOR....04 - 32
Removal - Refitting....04 - 32
ELECTROINJECTORS....04 - 33
Removal - Refitting....04 - 33

AIR SUPPLY SYSTEM

ASSEMBLY....04 - 34
INTAKE MANIFOLD....04 - 35
Removal - Refitting....04 - 35
AIR TEMPERATURE SENSOR....04 - 40
Removal - Refitting....04 - 40
CONSTANT IDLE SPEED ACTUATOR....04 - 41
Removal - Refitting....04 - 41
THROTTLE VALVE POTENTIOMETER....04 - 43
Removal - Refitting....04 - 43

FUEL SUPPLY SYSTEM
ASSEMBLY

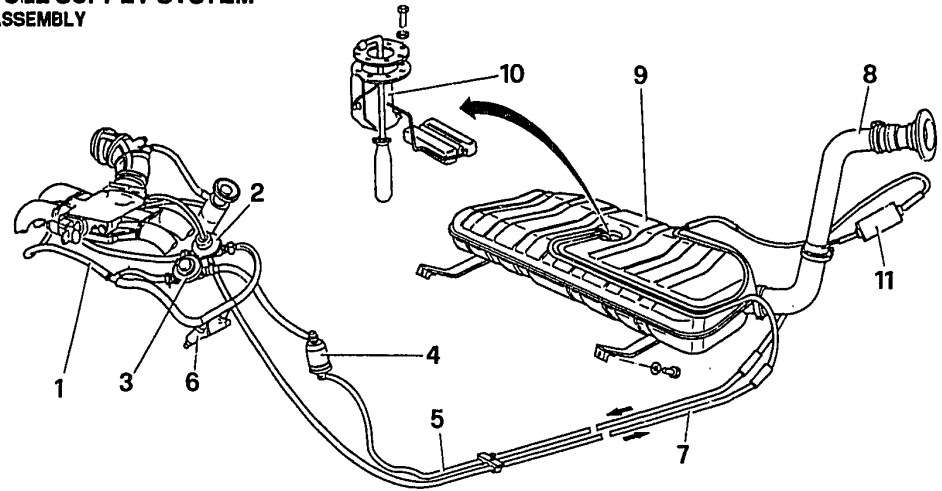

1. *Fuel supply manifold*
2. *Pressure regulator*
3. *Dashpot*
4. *Fuel filter*
5. *Fuel delivery hose*
6. *Electroinjectors*
7. *Excess fuel return hose*
8. *Filler neck*
9. *Tank*
10. *Fuel level measurement assembly*
11. *Fuel pump*

FUEL PUMP

Removal - Refitting

- Place the vehicle on a lift and disconnect the negative cable from the battery.

1. Working from under the vehicle, on the rear left-hand side, disconnect the fuel pump cables.
2. Pinch the fuel inlet and outlet (from the pump) hoses and loosen the clamps and disconnect the hoses from the pump.
3. Loosen the clamp and remove the fuel pump.

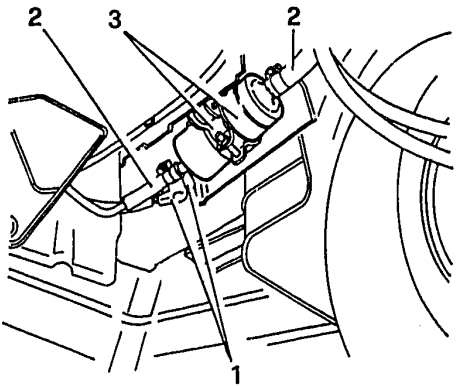

FUEL FILTER
Substitution

- Place the vehicle on a lift and raise it.
1. Unhook the clips and remove the plastic covering.
2. Unscrew the connections of the fuel inlet and outlet hoses (from the pump) and replace the gaskets.

Plug the connections to prevent fuel from leaking out.

3. Loosen the clamp and remove the filter.
- Refit a new filter ensuring that the arrow stamped in the filter body points in the direction in which the fuel flows.
- Complete by refitting the filter reversing the procedures followed for removal.

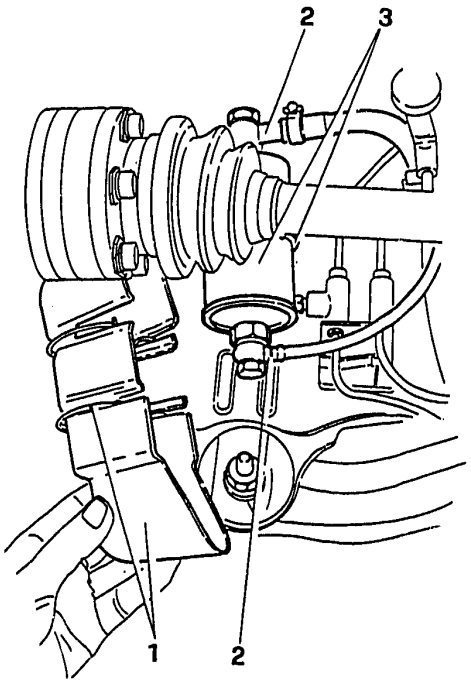

DASHPOT
Removal - Refitting

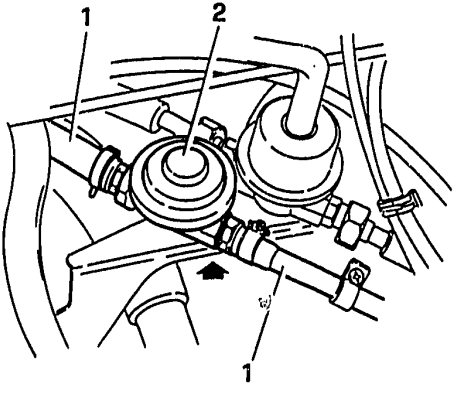

– Remove the air intake box (see specific procedure).

1. Loosen the clamps and disconnect the fuel inlet and outlet hoses form the dashpot.

Operate with caution: the fuel system may be under pressure.

2. Loosen the retaining nut shown in the illustration and remove the dashpot from the support bracket.

During this operation ensure that no dirt gets into the hoses as this would compromise the efficiency of the electroinjectors.

FUEL PRESSURE REGULATOR
Removal-Refitting

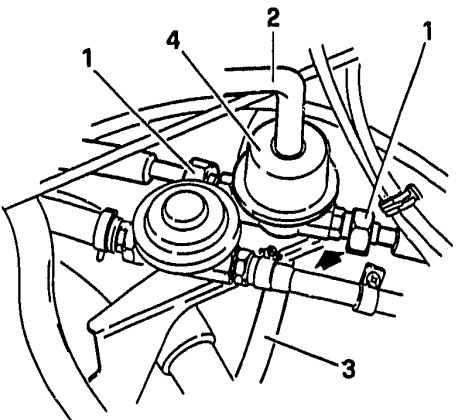

— Remove the air intake box (see specific procedure).

1. Unscrew the two connections uniting the supply manifold to the pressure regulator.

Operate with caution: the fuel system may be under pressure.

2. Disconnect the vacuum intake hose from the regulator.
3. Disconnect the excess fuel return hose from the regulator.
4. Unscrew the nut shown in the illustration and remove the pressure regulator from the support bracket.

ELECTROINJECTORS
Removal - Refitting

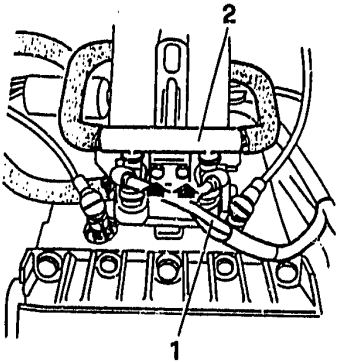

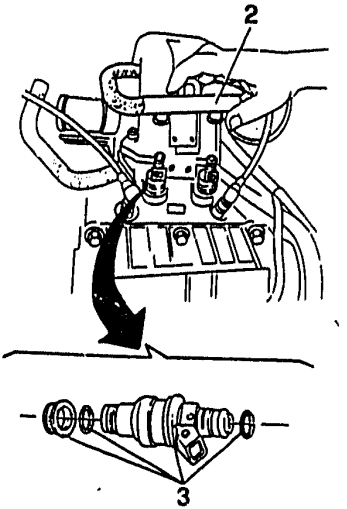

– Disconnect the negative cable from the battery.
1. Disconnect the power supply wiring connectors from the electroinjectors.
2. Unscrew the screws shown in the illustration and raise the supply manifold freeing it from the electroinjectors.
3. Remove the electroinjectors together with the O-rings and gasket.

– Refit by reversing the procedure followed for removal and note the following:
  - replace all the O-rings and gaskets
  - position the electroinjector with the connector facing outwards.

AIR SUPPLY SYSTEM

ASSEMBLY

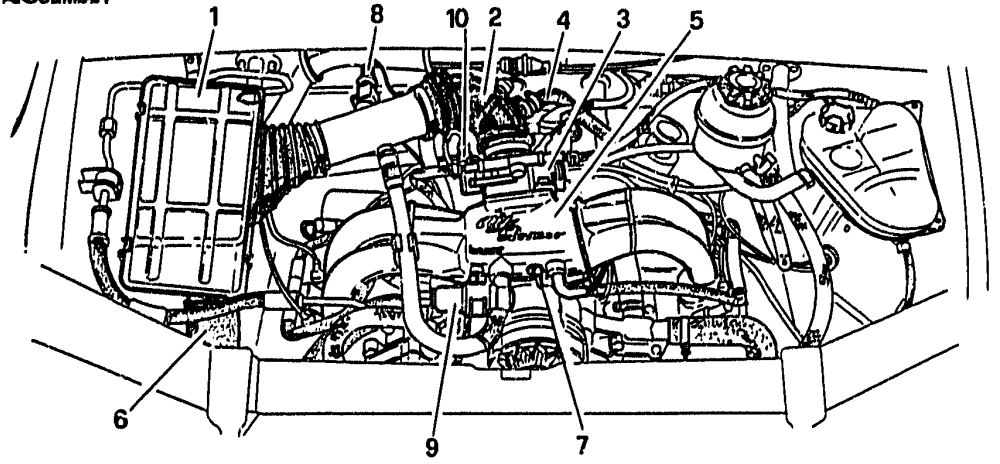

1. *Air cleaner*
2. *Corrugated sleeve*
3. *Throttle body*
4. *Oil vapour breather pipe*
5. *Intake manifold*
6. *Air intake sleeve*
7. *Vacuum intake hose for absolute pressure sensor (integrated with control unit)*
8. *Air temperature sensor*
9. *Constant idle speed actuator*
10. *Throttle valve potentiometer*

INTAKE MANIFOLD
Removal - Refitting

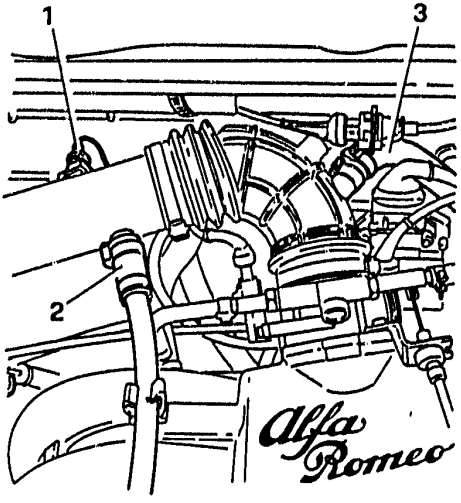

– Disconnect the negative cable from the battery.
1. Disconnect the electrical connection from the intake air temperature sensor.
2. Disconnect the the air intake hose for the constant idle speed actuator from the intake sleeve.
3. Disconnect the oil vapour breather pipe from the corrugated sleeve.

Removal - Refitting (continued)

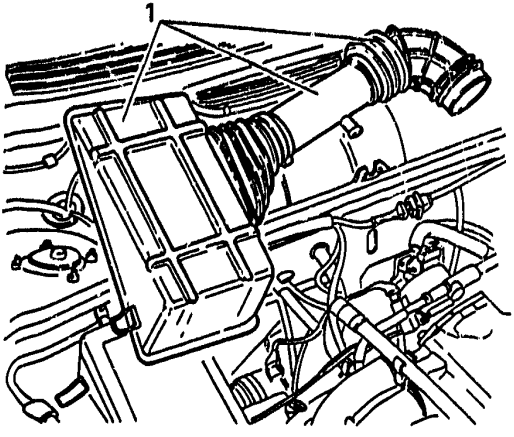

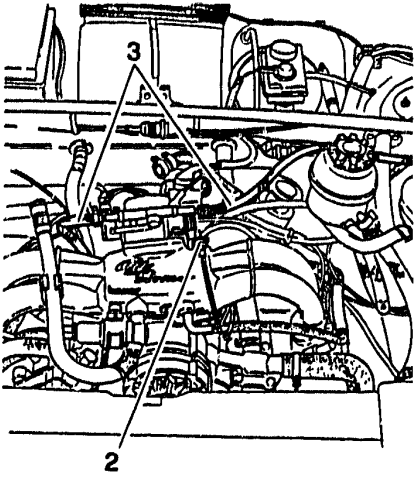

1. Remove the air cleaner cover together with the intake sleeves.
2. Rotate the accelerator control lever and remove the pawl at the end of the cable.
3. Loosen the clamp and disconnect the engine coolant inlet and outlet sleeves from the throttle body.

Removal - Refitting (Continued)

1. Disconnect the electrical connection from the throttle valve potentiometer.
2. Disconnect the fuel vapour intake hose from the intake box.

– Disconnect the idle speed oil vapour intake hose from under the throttle body.

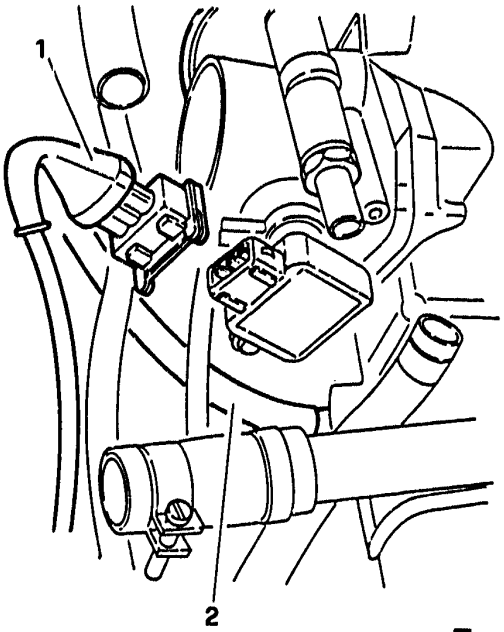

Removal - Refitting (Continued)

1. Disconnect the electrical connection from the constant idle speed actuator.
2. Disconnect the air intake hose for the idle speed actuator.
3. Disconnect the vacuum intake hose for the absolute pressure sensor from the intake manifold.
4. Disconnect the vacuum intake hose for the fuel pressure regulator from the intake manifold.

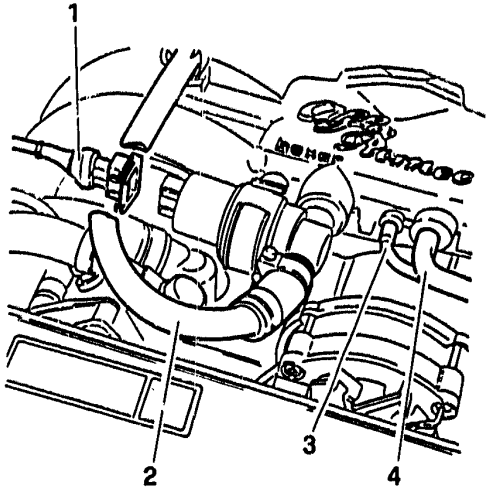

Removal - Refitting (Continued)

1. Unscrew the nuts and remove the intake manifold.
– If necessary unscrew the screws and remove the throttle body and the constant idle speed actuator from the sleeve.
– Refit by reversing the procedure followed for removal.

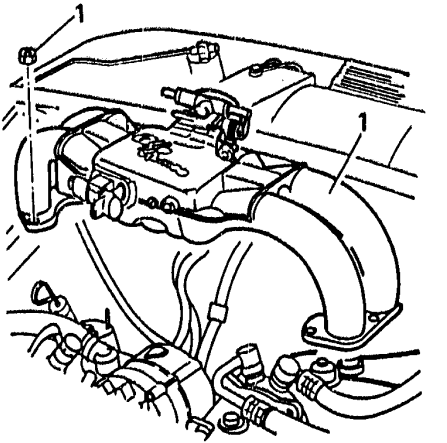

AIR TEMPERATURE SENSOR

Removal - Refitting

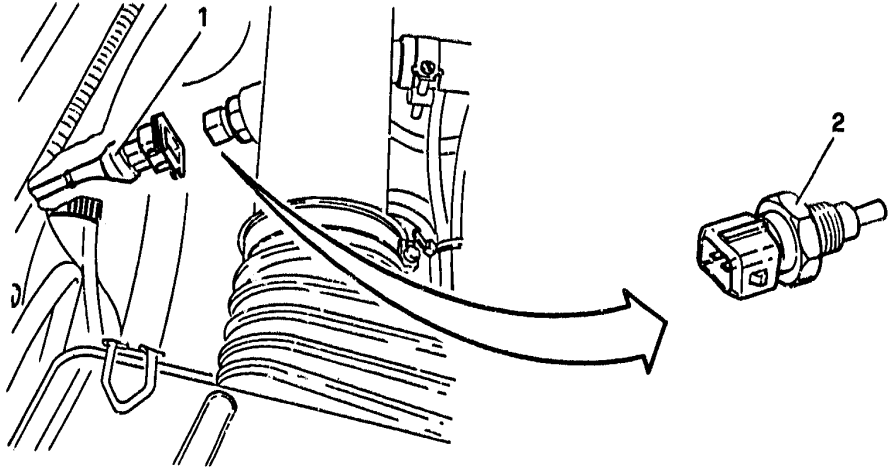

– Disconnect the negative cable from the battery.

1. Disconnect the electrical connection from the air temperature sensor.
2. Remove the air temperature sensor.

CONSTANT IDLE SPEED ACTUATOR

Removal - Refitting

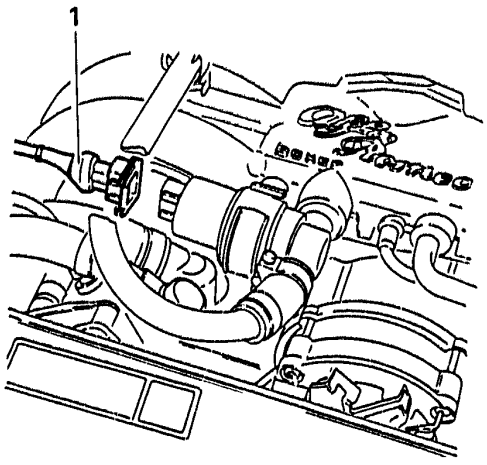

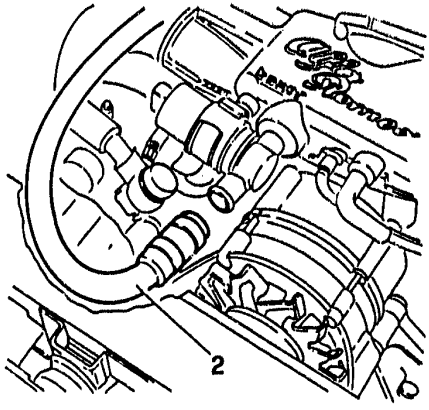

– Disconnect the negative cable from the battery.

1. Disconnect the electrical connection from the constant idle speed actuator.
2. Loosen the clamp and disconnect the air intake hose from the constant idle speed actuator.

Removal - Refitting (Continued)

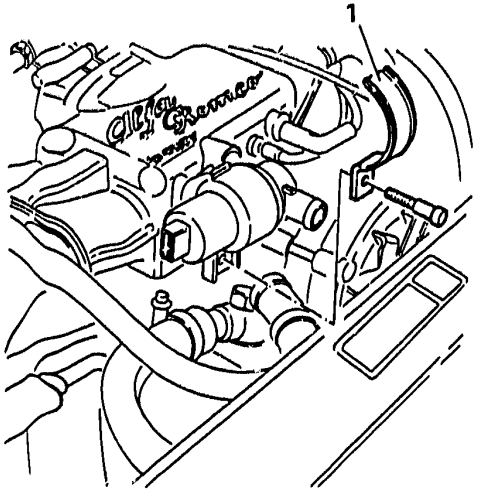

1. Remove the clamp securing the constant idle speed actuator to the intake manifold.

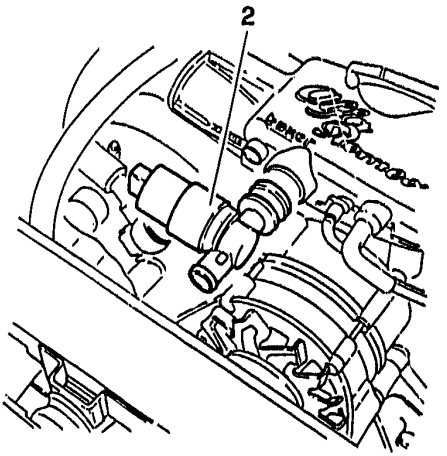

2. Remove the constant idle speed actuator.

THROTTLE VALVE POTENTIOMETER

Removal - Refitting

- Disconnect the negative cable from the battery.
1. Disconnect the electrical connection from the throttle valve potentiometer.
2. Loosen the two screws and remove the throttle valve potentiometer.

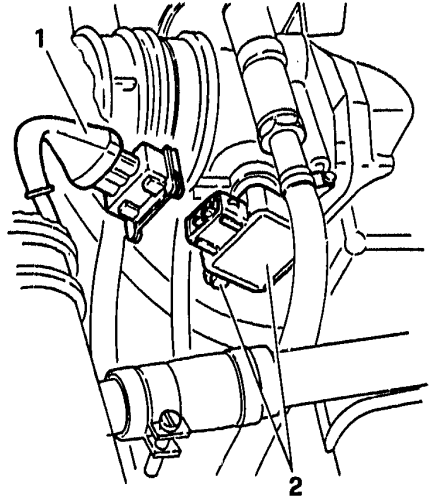

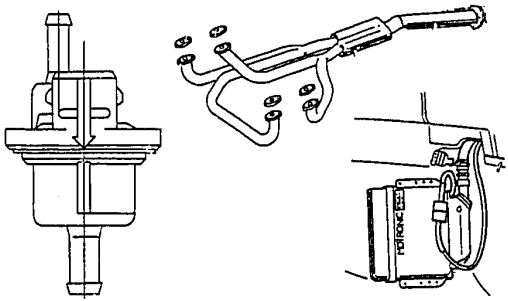

MOTRONIC MP3.1 ELECTRONIC INJECTION ENGINES

- FUEL VAPOUR EMISSION CONTROL SYSTEM
- EXHAUST SYSTEM
- ELECTRICAL - ELECTRONIC COMPONENTS

FUEL VAPOUR EMISSION CONTROL SYSTEM

ASSEMBLY.....04 - 44

EXHAUST SYSTEM

ASSEMBLY (For 4x2 models).....04 - 46
ASSEMBLY (For 4x4 models).....04 - 47
LAMBDA PROBE.....04 - 48
Removal - Refitting.....04 - 48

ELECTRICAL - ELECTRONIC COMPONENTS

INJECTION - IGNITION CONTROL UNIT.....04 - 49
Removal - Refitting.....04 - 49
R.P.M. AND TIMING SENSOR.....04 - 51
Removal - Refitting.....04 - 51
Checking air gap.....04 - 52

FUEL VAPOUR EMISSION CONTROL SYSTEM

ASSEMBLY

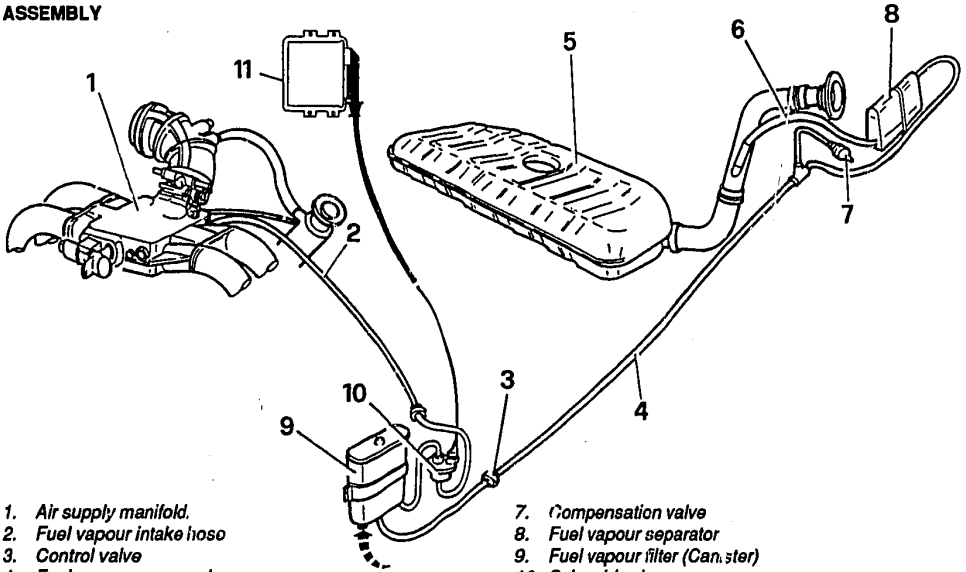

1. *Air supply manifold.*
2. *Fuel vapour intake hose*
3. *Control valve*
4. *Fuel vapour recovery hose*
5. *Fuel tank*
6. *Fuel vapour breather pipe*
7. *Compensation valve*
8. *Fuel vapour separator*
9. *Fuel vapour filter (Canister)*
10. *Solenoid valve*
11. *Ignition - injection control unit*

FUEL VAPOUR EMISSION CONTROL SYSTEM (Continued)

- For a description of the fuel vapour emission control system and the removal/refitting of the various components, refer to the **IE 16V** vehicles.
- In this system a new solenoid valve has been employed as indicated in the illustration.

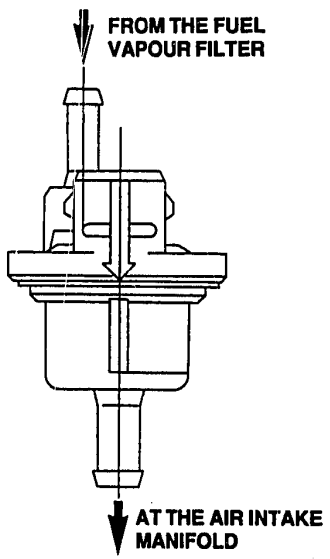

EXHAUST SYSTEM

ASSEMBLY (for 4x2 models)

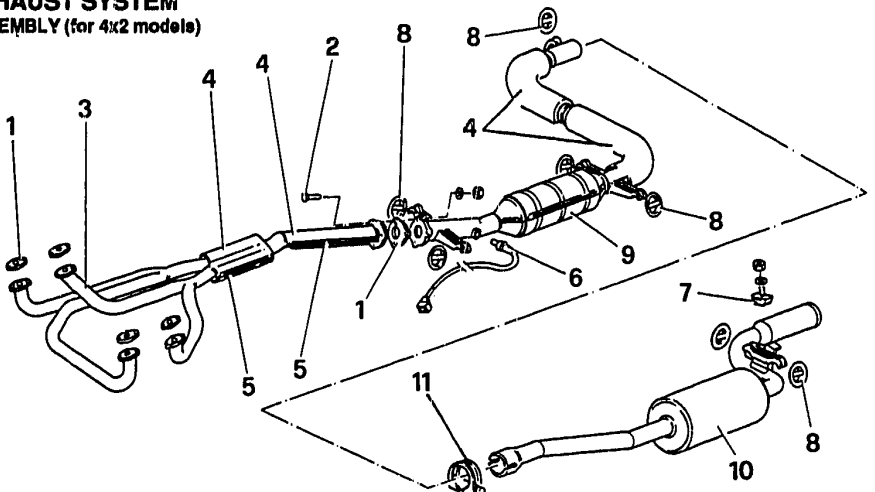

1. *Gasket*
2. *Bolt*
3. *Exhaust manifold*
4. *Upper insulation*
5. *Lower insulation*
6. *Lambda probe*
7. *Flexible block*
8. *Flexible support ring*
9. *Catalytic exhaust*
10. *Rear silencer*
11. *Clamp*

EXHAUST SYSTEM
ASSEMBLY (for 4x4 models)

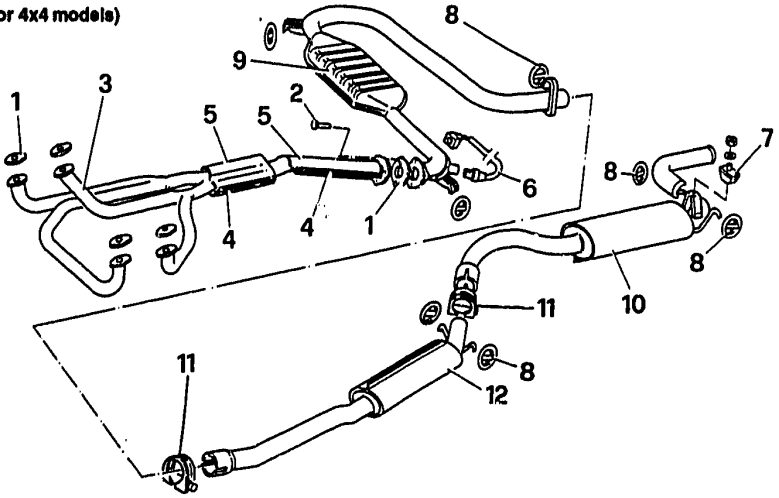

1. *Gasket*
2. *Bolt*
3. *Exhaust manifold*
4. *Lower insulation*
5. *Upper insulation*
6. *Lambda probe*
7. *Flexible block*
8. *Flexible support ring*
9. *Catalytic exhaust*
10. *Rear silencer*
11. *Clamp*
12. *Central silencer*

LAMBDA PROBE
Removal - Refitting

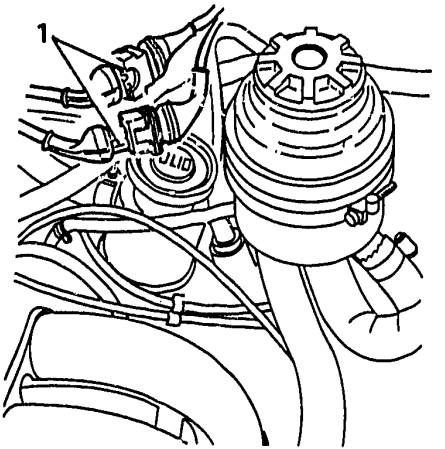

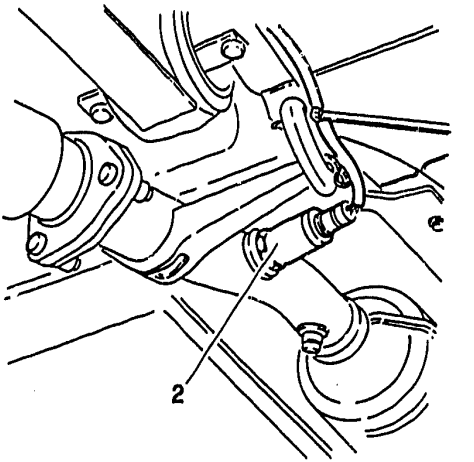

– Place the vehicle on a lift.

1. Working from the engine compartment disconnect the negative cable from the battery and the electrical connections from the lambda probe and free the wiring from the clamps.

2. Raise the vehicle and remove the lambda probe.

ELECTRICAL - ELECTRONIC COMPONENTS

INJECTION - IGNITION CONTROL UNIT

Removal - Refitting

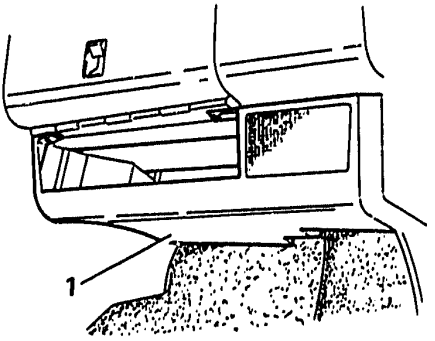

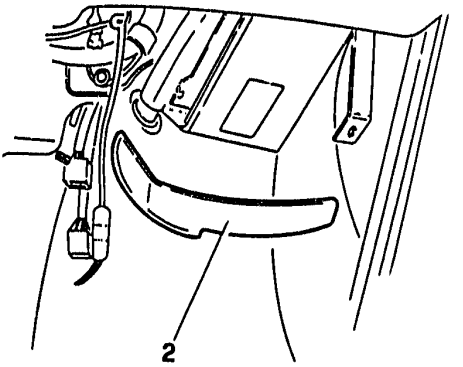

– Disconnect the negative cable from the battery.

1. Remove the trim from the below the right-hand part of the dashboard.

2. Unscrew the two nuts and remove the control unit support.

⇩

Removal - Refitting (Continued)

1. Withdraw the control unit.
2. Disconnect the control unit from the vacuum intake hose for the absolute pressure sensor integrated in the control unit.
3. Disconnect and remove the comb connector from the control unit.

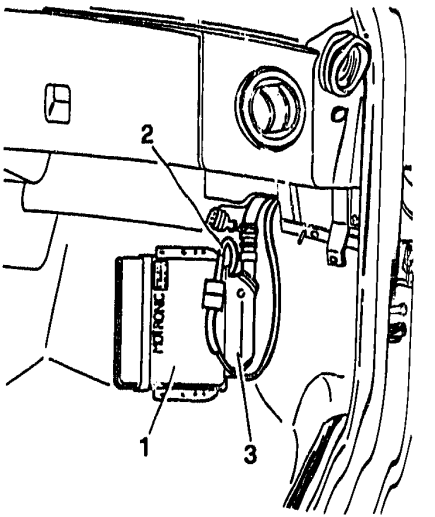

R.P.M. AND TIMING SENSOR

Removal - Refitting

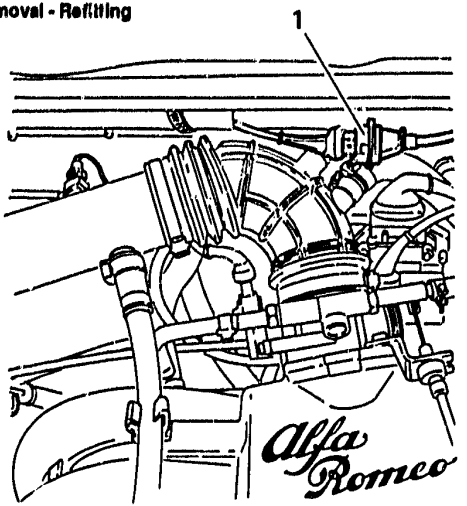

- Place the vehicle on the lift.
- Disconnect the negative cable from the battery.

1. Working from the engine compartment, disconnect the electrical connection from the r.p.m. and timing sensor and free the wiring from the clamps.

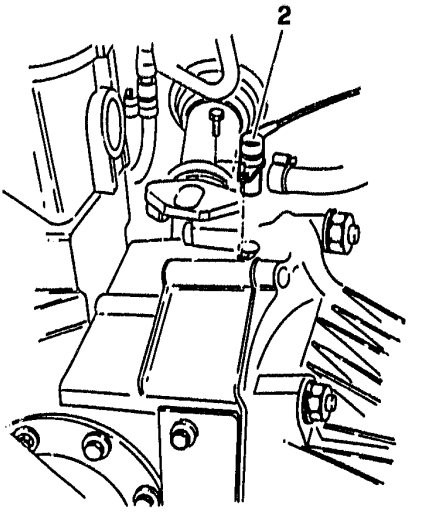

2. Raise the vehicle and remove the r.p.m. and timing sensor by unscrewing the screws.

When refitting ensure that the cable of the r.p.m. and timing sensor is kept well away from the high voltage cables.

R.P.M. AND TIMING SENSOR (Continued)

Checking air gap

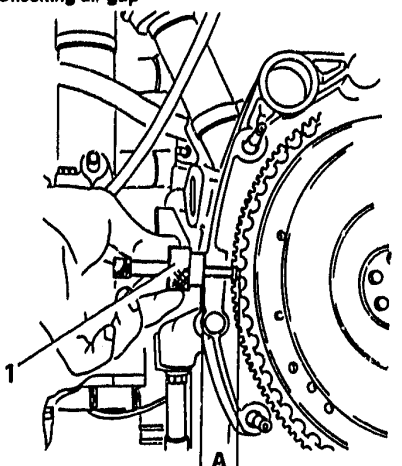

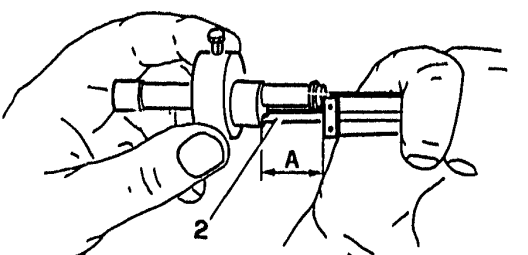

– Remove the T.D.C. and revolution sensor (see specific procedure).

1. Using tool N° 1.820.079.000 (A.2.0449) measure "A".
2. Using a gauge measure "A".

R.P.M. AND TIMING SENSOR
Checking air gap (continued)

1. With a gauge, measure "B".
– Calculate the air gap of the r.p.m. and timing sensor as shown and check that it is within the specified limits.



A - B = 0.5 - 1.5 mm

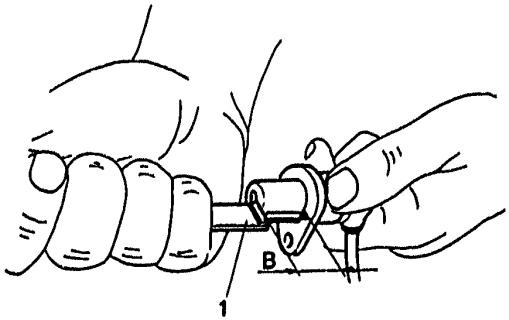

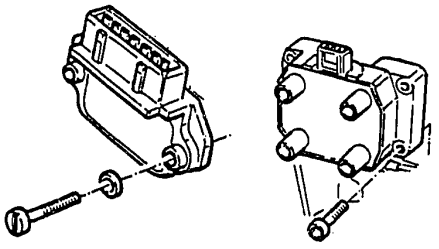

MOTRONIC MP3.1 ELECTRONIC INJECTION ENGINES

WARNING

IGNITION COIL

IGNITION MODULE

WARNING ..... 05 - 1
IGNITION COIL
REMOVAL - REFITTING ..... 05 - 2
IGNITION MODULE
REMOVAL - REFITTING ..... 05 - 5

WARNING

THE HIGH VOLTAGE STATIC DISTRIBUTION SYSTEM IS DEALT WITH IN GROUP 04 ALONG WITH INJECTION.

IGNITION COIL

Removal - refitting

– Disconnect the negative cable from the battery.
1. Disconnect the electrical connection from the ignition module.
2. Disconnect the electrical connection from the ignition coil.
3. Disconnect the oil vapour breather pipe from the corrugated sleeve.

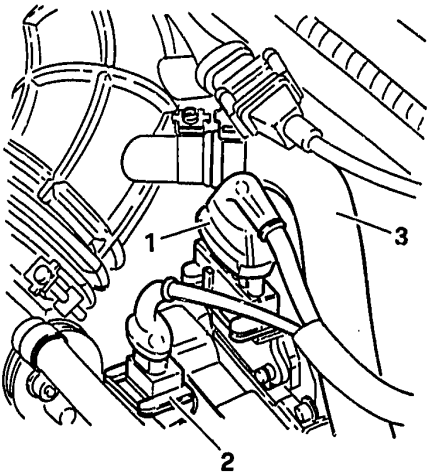

Removal - refitting (Continued)

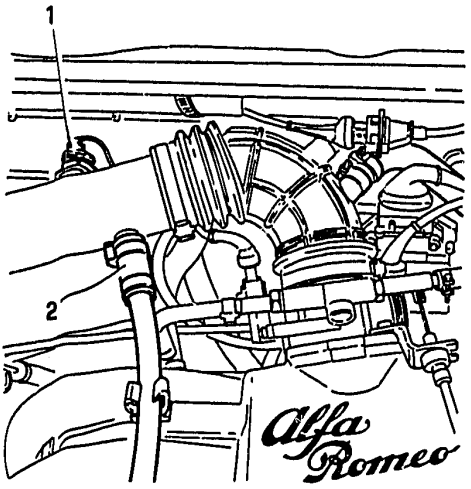

1. Disconnect the electrical connection from the intake air temperature sensor.
2. Disconnect the constant idle speed actuator air intake hose from the intake manifold.

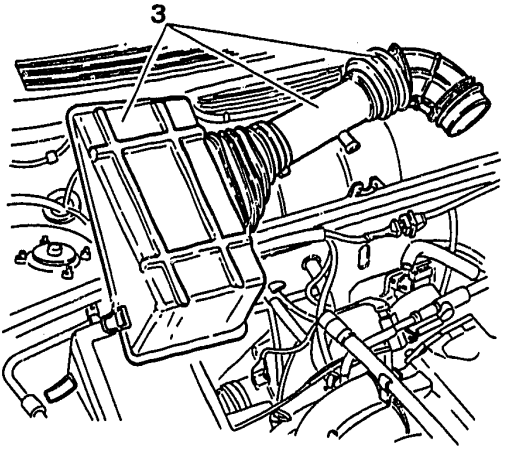

3. Remove the air cleaner cover and intake sleeves.

Removal - refitting (Continued)

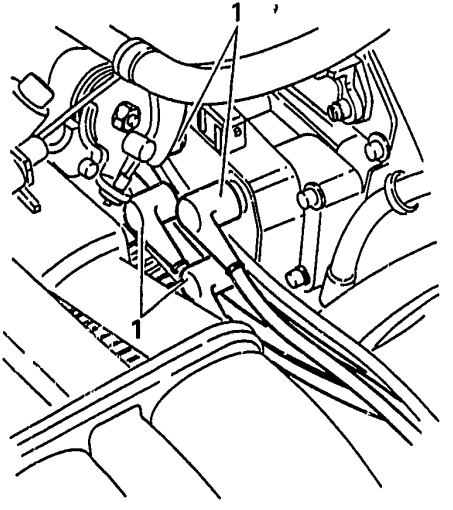

1. Disconnect the spark plug cables from the ignition coil.

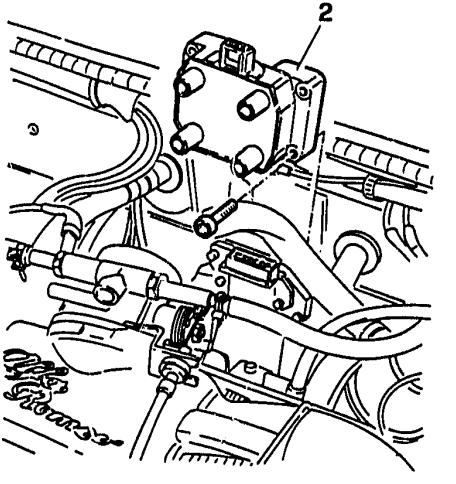

2. Loosen the screws and remove the ignition coil.

IGNITION MODULE

Removal - refitting

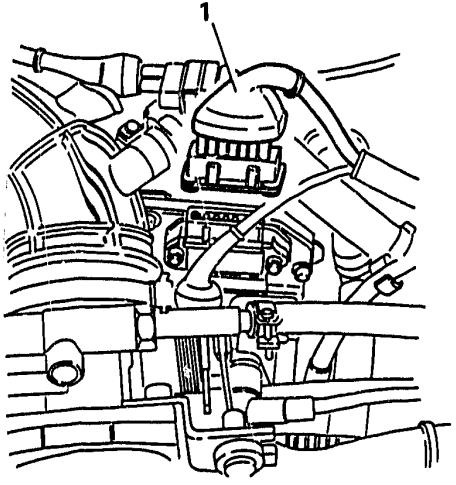

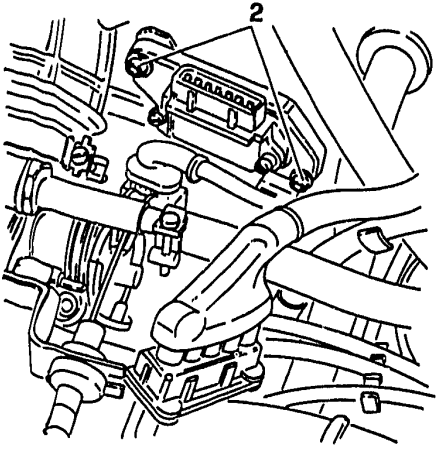

- Disconnect the negative cable from the battery.

1. Disconnect the electrical connection from the ignition module.

2. Unscrew the screws securing the ignition module support.

Removal - refitting (Continued)

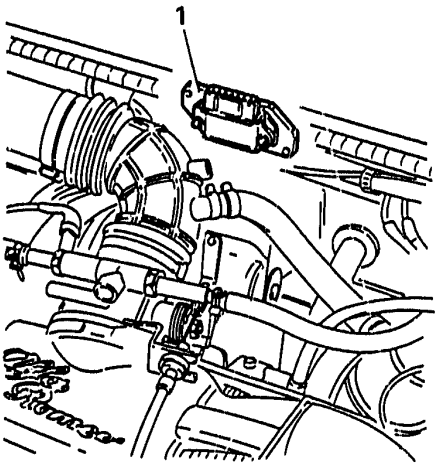

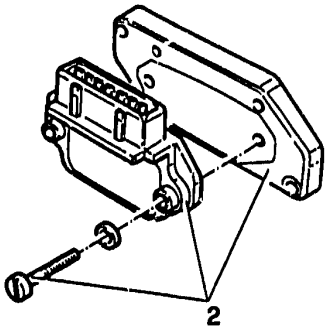

1. Remove the ignition module and support.

2. Unscrew the screws and separate the ignition module from the support.

This document was downloaded free from

www.iw1axr.eu/carmanual.htm

Questo documento è stato scaricato gratuitamente da

www.iw1axr.eu/auto.htm