ROSANOVA ALFA
BALTIMORE AVENUE
BLADENSBURG, MD.

ENGINE MAINTENANCE MANUAL

ALFA ROMEO gtv 6 2.5

L-JETRONIC BOSCH INJECTION SYSTEM

(49 STATE VERSION)

1983
model year

Document owned by La Belle Auto, XH-2006
© Alfa Romeo

XH La Belle Auto

Signature numérique de XH La Belle Auto
ID : CN = XH La Belle Auto, C = BE
Date : 2006.11.21 14:17:42 +01'00'

Alfa Romeo

ENGINE MAINTENANCE MANUAL

ALFA ROMEO gtv 6 2.5

L-JETRONIC BOSCH INJECTION SYSTEM

(49 STATE VERSION)

Document owned by La Belle Auto, XH-2006
© Alfa Romeo

1983
model year

Document owned by La Belle Auto, XH-2006
© Alfa Romeo

WARNING:

The Clean Air Act, as amended, provides in sect. 203 that tampering with emission related components or specifications is prohibited.

"Tampering" can be defined as any operation performed that causes any change in the specifications contained with in this manual.

All **ALFA ROMEO** vehicles are certified and are controlled to insure that they meet these specifications when they leave the factory. Vehicles being out of specification due to maladjustment or modification will usually exceed established emission standards for that vehicle, as well as consume excessive fuel.

The specifications contained in this manual have been furnished to Federal and State Environmental Control Agencies, and are those which are used in surveillance programs to determine the vehicle conformity to its certified configuration.

ATTENTION

For use in designated high altitude areas check and reset idle RPM (refer to chapter C 7).

CONTENTS

A — L-JETRONIC INJECTION AND EMISSION CONTROL SYSTEM

A1 Air and fuel hoses diagram of L-Jetronic injection system ..... Pag. 4
A2 Wiring diagram of L-Jetronic injection system ..... " 5
A3 Description of L-Jetronic system ..... " 6
A4 Electric fuel pump ..... " 6
A5 Fuel pressure regulator ..... " 7
A6 Injectors ..... " 7
A7 Air flow sensor (AFS) ..... " 7
A8 Auxiliary air device ..... " 8
A9 Cold start injection (start valve) and thermo-time switch ..... " 9
A10 Engine coolant temperature thermistor (temperature sensor II) ..... " 9
A11 Decel valve ..... " 9
A12 Full throttle switch ..... " 9
A13 Bypass for idle speed adjustment ..... " 9
A14 Exhaust gas lambda sensor ..... " 10
A15 Catalytic converter ..... " 10
A16 Filler neck for unleaded fuel only ..... " 10

B — RECOMMENDED USE

B1 Fuel requirement ..... " 11
B2 Temperature of the catalytic converter ..... " 11
B3 Precautions to be taken in catalytic equipped models ..... " 12

C — RECULAR SERVICING

C1 Cleaning or changing the air cleaner ..... " 13
C2 Changing or adjusting the alternator and coolant pump drive belt ..... " 13
C3 Checking the tension of A/C compressor drive belt ..... " 14
C4 Tightening torques ..... " 14
C5 Spark plugs and firing order ..... " 15
C6 Checking and adjusting the valve clearance - valve timing diagram ..... " 15
C7 Adjusting the idle speed - Adjusting CO% at idle ..... " 18
C8 Substituting the lambda sensor ..... " 19

D — DIAGNOSTIC PROCEDURES AND REPAIRS

D1 Renewing the timing belt ..... " 21
D2 Fitting the timing belt ..... " 22
D3 Adjusting the timing belt tension ..... " 22
D4 Checking and adjusting the ignition timing ..... " 23
D5 Ignition distributor ..... " 24
D6 Installing and timing the distributor ..... " 24
D7 Setting the throttle linkage ..... " 25
D8 Testing the fuel pressure ..... " 26
D9 Substituting the fuel filter ..... " 26
D10 Renewing the injectors ..... " 27
D11 Checking the air - flow sensor ..... " 28
D12 Inspecting the air - intake ducting for leaks ..... " 28
D13 Setting the fuel - load switch ..... " 28
D14 Checking the relay set ..... " 29
D15 Checking the thermo - time switch ..... " 29
D16 Inertia switch ..... " 29
D17 Checking the catalyst overtemperature warning device ..... " 30
D18 Thermocouple check ..... " 30
D19 Checking the catalytic converter ..... " 31
D20 Fuel evaporative system leakage diagnostic procedure ..... " 32
D21 Fuel injection system supply leakage diagnostic procedure ..... " 33
D22 Rapid diagnosis for L-Jetronic ..... " 34
D23 Important general information ..... " 35

E — TROUBLESHOOTING PROCEDURE ..... " 36

F — TESTING THE BOSCH ELECTRONIC INJECTION SYSTEM - PROCEDURE WITH BOSCH TESTER ..... " 45

G — WIRING DIAGRAM: L-JETRONIC INJECTION SYSTEM ..... " 50

Document owned by La Belle Auto, XH-2006
© Alfa Romeo

A L-JETRONIC INJECTION AND EMISSION CONTROL SYSTEM

A 1 AIR AND FUEL HOSES DIAGRAM OF L-JETRONIC INJECTION SYSTEM

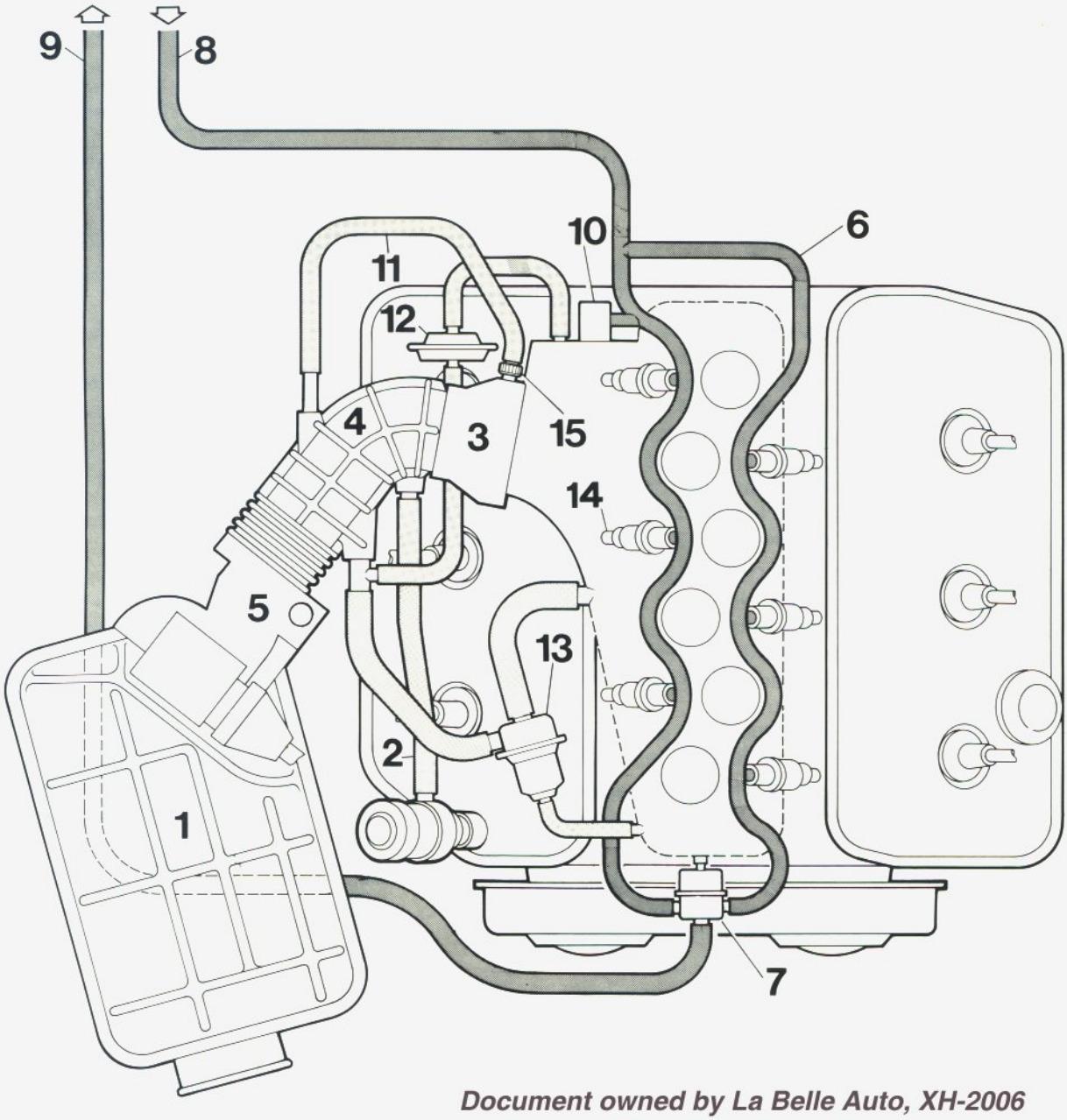

Document owned by La Belle Auto, XH-2006
© Alfa Romeo

1 Air filter
2 Crankcase ventilation hose
3 Throttle body
4 Air-flow sensor to throttle duct
5 Air-flow sensor
6 Fuel ring (main supply)
7 Pressure regulator
8 Fuel delivery line
9 Fuel return line
10 Start valve
11 Idle hose
12 Auxiliary-air device
13 Decel valve
14 Fuel injector (fuel-injection valve)
15 Nut for idle-speed adjustment

A 2 WIRING DIAGRAM OF L-JETRONIC INJECTION SYSTEM

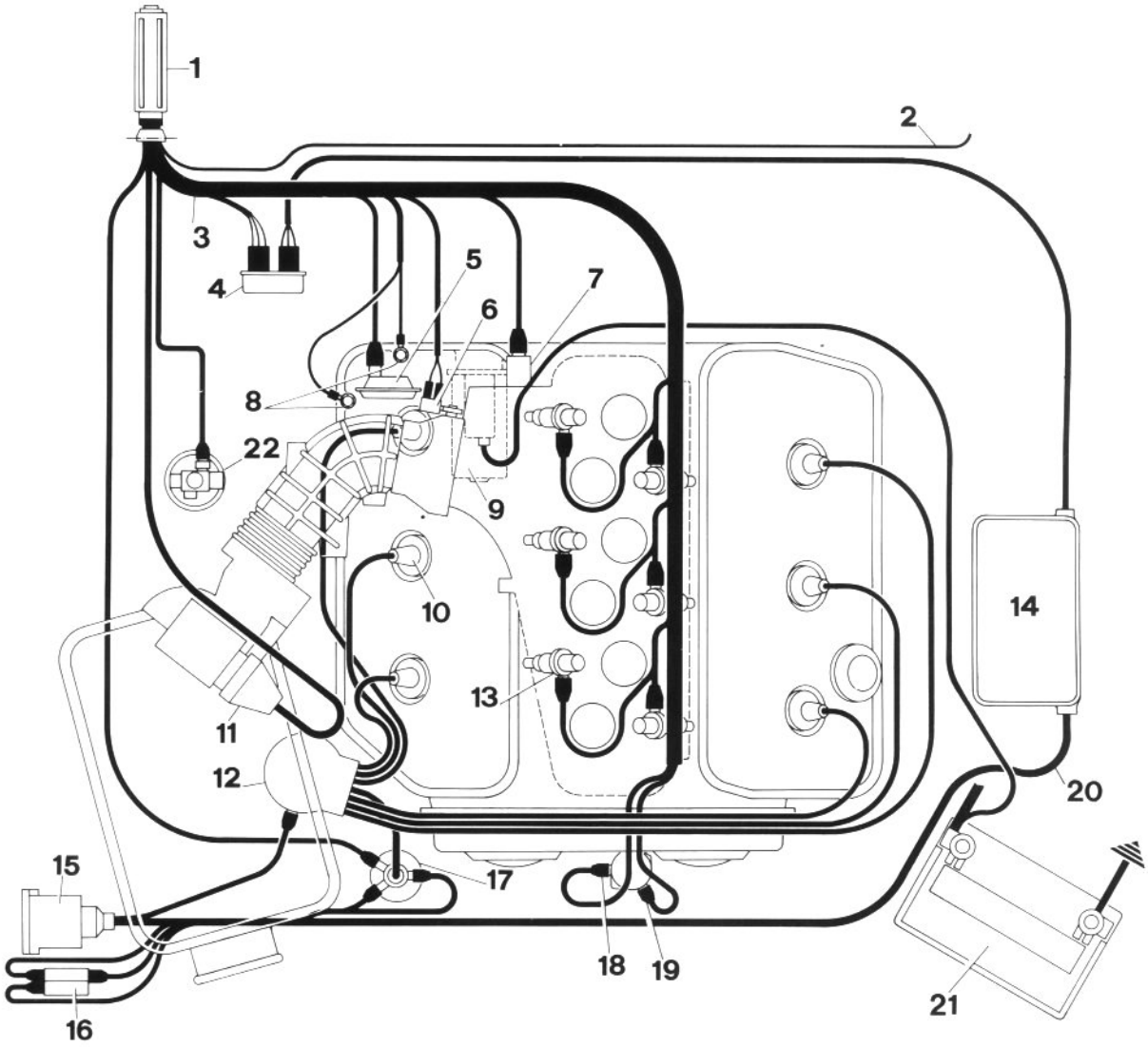

Document owned by La Belle Auto, XH-2006
© Alfa Romeo

1 Female connector to electronic control unit
2 Lead to lambda sensor
3 Jetronic wiring harness
4 Relay set
5 Auxiliary-air device
6 Full-load switch
7 Start valve
8 Ground terminals
9 Starter motor
10 Spark plug
11 Air-flow sensor
12 Ignition distributor
13 Fuel injectors
14 Fuse box
15 Ignition amplifier module
16 Series resistor, ignition
17 Ignition coil
18 Thermo-time switch
19 Temperature sensor II
20 Vehicle wiring harness
21 Battery
22 Filter for air conditioner

A 3 DESCRIPTION OF L-JETRONIC SYSTEM

The electronically controlled L-JETRONIC Bosch fuel injection is an intermittent, low pressure injection system.

The information required for fuel supply to the engine is obtained by measuring sensor and then converted into electronic signals.

An electronic control unit processes these signals and obtains the engine's fuel requirements from them: it then issues the electronic control pulses, corresponding to the required fuel quantity, to the injectors.

An electric pump in the fuel supply system draws fuel from the tank and delivers it, through a manifold and its connections, to the injectors. These in turn inject the fuel upstream of the engine intake valves. The system control element is the electronic unit, to which the following electric signals are issued:

- Voltage from the battery
- Pulses from the ignition distributor
- Throttle valve fully open signal
- Engine coolant temperature
- Engine airflow intake
- Starter motor on signal
- Signal from the exhaust gas tester lambda sensor.

It then calculates injector opening time and issues an electric pulse of corresponding duration. As the fuel pressure upstream of the injectors is constant, the injected quantity is directly proportional to the above opening time; this time being calculated in relationship to the instantaneous operating conditions of the engine. The system is also equipped with the following devices:

- Cold start injector, to deliver additional fuel during start-up (controlled by thermo-time switch)
- Auxiliary air device to deliver a larger flow of air and fuel to the engine during initial cold running
- Decel valve, to improve engine running when releasing the throttle, eliminating backfiring and excess emission.

Document owned by La Belle Auto, XH-2006
© Alfa Romeo

A 4 ELECTRIC FUEL PUMP

This pump is of the rotary cell and roller type; it is driven by a small motor submerged in the pressurized fuel after the pump set. A lower noise level is achieved by this solution; moreover, the pressurized fuel acts as a hydraulic bearing for the motor shaft on its bushings. The pump delivers more fuel than the actual maximum required by the engine so as to keep the fuel system under pressure at any operating condition. Inserting the ignition key (position 1) into the ignition switch and rotating it to position 2 (ignition "on") does not feed the electrical fuel pump; in position 3 (starting) instead, since the engine is cranked, the air sucked in causes the air flow sensor floating flap to rotate thus switching on the fuel pump feed circuit. This electronic safety circuit keeps a cylinder from filling with fuel, when the ignition is turned on, should its injection valve be faulty.

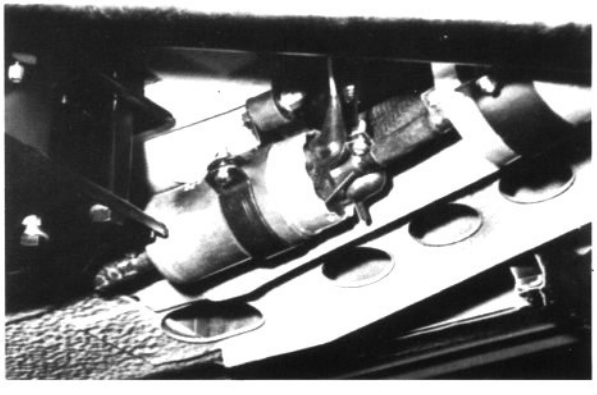

A 5 FUEL PRESSURE REGULATOR

The fuel under pressure enters the lower chamber and acts on the diaphragm; this overcomes the force of the spring and rises, together with its plate, thus opening the tank return connection. The regulating action of the fixed calibration spring is added to the action exerted by the pressure of the intake manifold air in the upper chamber.

When this pressure drops, the diaphragm rises, opens the return connection and thus correspondingly lowers the fuel pressure and viceversa. The purpose of this additional regulation is to hold the pressure drop between the fuel upstream of the injectors and the manifold air constant, so as to have the fuel flow rate depend exclusively on the injector's opening time.

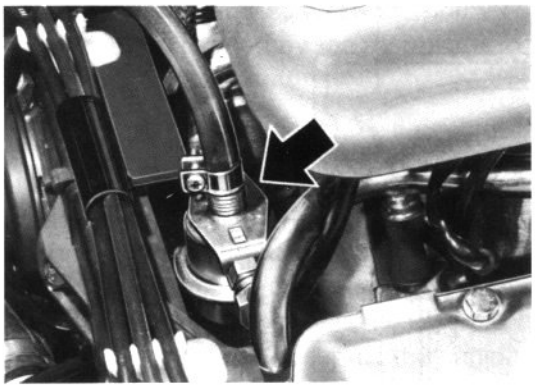

A 6 FUEL INJECTORS

Each cylinder has its own electromagnetically operated injector; the injectors are electrically parallel-connected and simultaneously inject one-half of the required fuel flow rate at every crankshaft revolution. The injector mainly consists of a magnetic winding (coil), needle guide, magnetic core and needle. The magnetic core moves with the needle, which is pressed by a spring on its sealing seat on the body. The injector needle opens under the action of the magnetic field established by the coil upon an electric signal issuing from the electronic unit. The plunger core, and therefore the needle, has a very short stroke (some 0.15 mm) because of the disk stop which keeps the plunger from hitting the stationary inside part; needle opening time is 2-10 ms, according to the signal issued by the electronic unit. The tip of the injector is fitted with a Teflon heat protection bushing to avoid fuel evaporation and the consequent build up of dry residuals on the needle.

This bushing should not be removed when installing the injector.

Document owned by La Belle Auto, XH-2006
© Alfa Romeo

A 7 AIR FLOW SENSOR (AFS)

The air flow sensor's task is to issue an electric signal, depending on the engine air intake flow, to the electronic control unit by means of a potentiometer.

The signal is used to enstablish injection duration.

The sensing element is a floating flap valve which opens in proportion to the air intake flow; this in turn is a function of engine RPM and throttle valve setting. The angle setting of this flap valve is transferred to a potentiometer rigidly fastened to the valve shaft.

A compensating flap valve, coupled to the floating one, compensates any air column reflux pressure oscillations, so as to keep them from interfering with air flow sensing.

A bypass is placed across the floating flap valve and fitted with a screw and sealing plug. By acting on this screw, the CO value can be adjusted to the minimum as, while the total air intake flow remains the same, the percentage flow rate through the flap valve changes, thereby acting on its angle setting and on the fuel delivery from the injectors.

A fuel pump control switch is inserted on the potentiometer; this switch opens when the floating flap valve rests against its stop at idle, as a safety in case of engine shutdown with the ignition on. When starting up, the pump is parallel connected to the starter motor as at this stage, at least at the beginning, there is no air flow and the switch therefore stays open.

An air intake temperature sensor (temperature sensor I) is placed at the airflow sensor inlet.

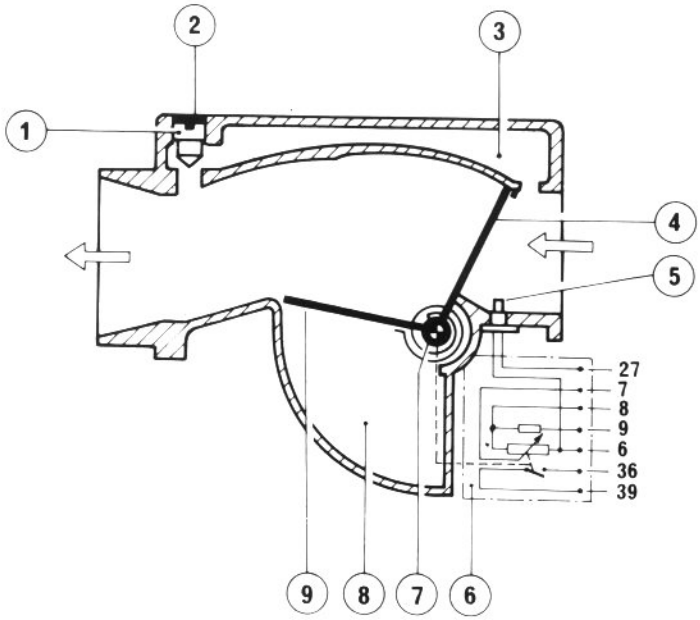

1 CO adjusting screw
2 Sealing plug
3 By-pass
4 Floating flap
5 Air temperature sensor I
6 Potentiometer
7 Return spring
8 Damping chamber
9 Compensating flap valve

A 8 AUXILIARY AIR DEVICE

The auxiliary air device is located on a throttle valve bypass and delivers an additional air flow when the engine is cold.

The bimetallic strip is sensitive to cylinder head temperature and closes the bypass when the engine is warmed up. The heating coils also act on this strip so as to have the bypass close before the whole engine is warmed up.

This device ensures cold engine smooth running, by offsetting the higher friction by a greater flow.

Document owned by La Belle Auto, XH-2006
© Alfa Romeo

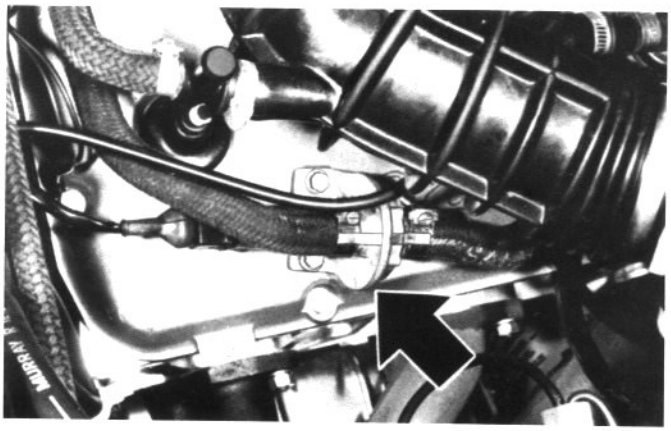

A 9 COLD START INJECTOR (START VALVE) and THERMO-TIME SWITCH

The cold start electric injector has the task of enriching the mixture in the intake manifold by injecting a fine fuel spray into it; it operates only when turning on the starter motor and if the thermo-time switch is closed.

The thermo-time switch consists of a bimetallic strip which opens the electric circuit when the temperature exceeds 35°C; under such conditions, the cold start injector. At the same time, the bimetallic strip is heated by its coil, and the circuit thus opens after a few seconds even though the starter motor is still running. This helps to avoid flooding the engine in the case of prolonged efforts to start the car.

A 10 ENGINE COOLANT TEMPERATURE THERMISTOR (TEMPERATURE SENSOR II)

During warm up after a cold start the engine requires a very rich mixture; this enrichment should be reduced as engine temperature increases and cease when the normal operating temperature is attained. Such temperature variations are transmitted by the thermistor to the electronic unit which adjusts the injected fuel flow to the engine temperature.

A 11 DECEL VALVE

The decel valve bypasses the throttle valve. When a very low pressure exists downstream of the throttle (as when releasing the accelerator while engine runs at high revs during deceleration), the decel valve opens and lets additional air in. This additional flow, by means of the air flow sensor, triggers a corresponding increase in fuel delivery. This eliminates the backfiring and hydrocarbon emission which might occur when releasing the throttle, should the engine be fed only by the air leaking through the closed throttle and by the corresponding fuel flow.

Document owned by La Belle Auto, XH-2006
© Alfa Romeo

A 12 FULL THROTTLE SWITCH

The switch closes when the throttle is fully opened. The corresponding electric signal causes a greater fuel flow and the simultaneous switching off of the lambda sensor circuit.

A 13 BYPASS FOR IDLE SPEED ADJUSTMENT

A screw-adjustable bypass bypasses the throttle valve.

The screw adjusts the idle speed without changing the CO value. In fact, the change in engine air intake, as controlled by the screw, is sensed by the airflow sensor which will also proportionally adjust the injected fuel rate.

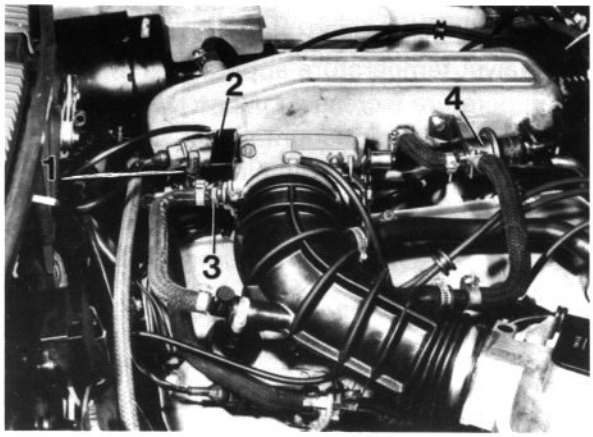

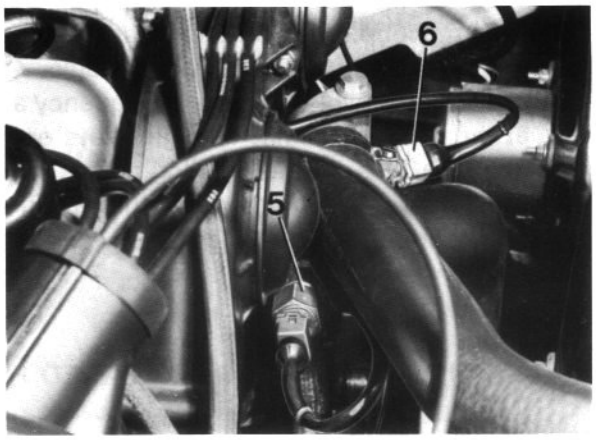

1 Cold start injector (start valve)
2 Full throttle switch (full-load switch)
3 Nut for idle-speed adjustment on by-pass
4 Decel valve
5 Thermo-time switch
6 Temperature sensor II

A 14 EXHAUST GAS LAMBDA SENSOR

The sensor's sensitive element is a ceramic capsule coated with a platinum sponge on both sides; the outside is exposed to the exhaust gases while the inside is in contact with the atmosphere. The oxygen content differential between air and exhaust gases is converted into an electric potential differential across the capsule.

This electrical signal is fed to the electronic control unit (ECU) which determines adjustments necessary to obtain the stoichiometric air fuel ratio required for maximum catalyst efficiency which results in minimal exhaust emissions.

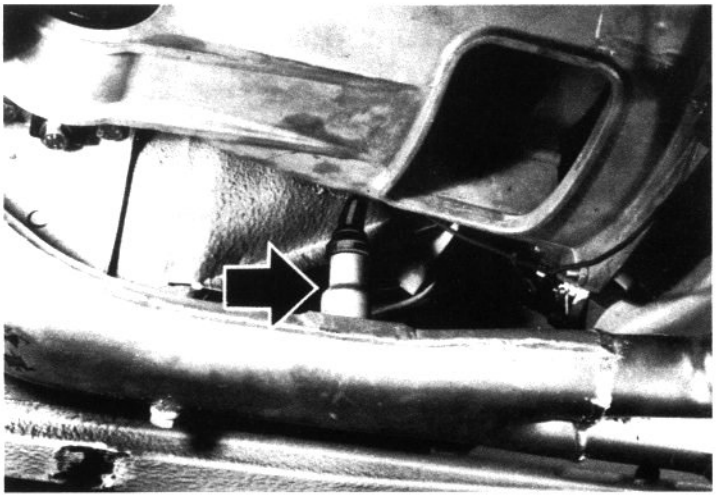

A 15 CATALYTIC CONVERTER

In order to reduce emissions, there is a catalytic converter in the exhaust system. It is made of a alumina monolith coated with an active material of noble metals in a special steel container for high temperature resistance. The system converts the HC and CO in the exhaust into water and CO_2, which are not harmful.

The catalyst is efficient within a certain temperature range. At low temperature there is no catalytic conversion. High temperature can cause deformation on the metal container and deterioration of the alumina, with a subsequent loss of efficiency of the catalyst itself. High temperatures can be caused by an excessive quantity of unburned fuel going through the alumina, owing either to excessive loads on the engine or maladjustment of the engine. In order to avoid high temperatures, a thermocouple is mounted in the catalyst and controls a light (EXH. TEMP.) on the instruments panel thru a warning device module. As the catalyst temperature approaches maximum, the light starts to blink, increasing frequency as the temperature increases. When the temperature is at the maximum limit, the light stays on permanently (this permanent signal is held due to breaking of a fuse on the warning device module). To see if the electric circuit and the "Exh. Temp." light are working properly, turn the ignition key to the on position: the light will remain lit for a few seconds.

Document owned by La Belle Auto, XH-2006
© Alfa Romeo

A 16 FILLER NECK FOR UNLEADED FUEL ONLY

The filler neck of the tank prevents accidental filling with other than unleaded gasoline. This is obtained by providing the tank with special device.

Only the nozzle of an unleaded gasoline pump is allowed to pass in the filler neck so as to open the flap valve and refuel the tank.

B RECOMMENDED USE

B1 FUEL REQUIREMENT

Octane Rating:

A gasoline's resistance to detonation or "knock" is noted by its octane rating. Purchase and use of correct octane fuel is essential to prevent "knock" which may eventually be harmuful to your car's engine. To higher the rating, the higher the ability to resist "knock". Regular fuels have an octane rating range from 91 to 95 RON (Research Octane Number) or 86 to 90 PON (Pump Octane Number). PON ratings appear on gasoline pumps in the U.S. This rating is determined in the following manner:

$$\frac{\text{RON} + \text{MON*}}{2} = \text{PON}$$

For example: Research Octane Number and Motor Octane Number divided by 2 equals Pump Octane Number.

> The PON octane rating is usually 5 points less than the RON rating:
> 91 RON = 86 PON
> 95 RON = 90 PON

Use of fuels with octane ratings lower than 91 RON or 86 PON should be avoided.

* Motor Octane Number.

Document owned by La Belle Auto, XH-2006
© Alfa Romeo

B 2 TEMPERATURE OF THE CATALYTIC CONVERTER

Excessive temperature in the catalytic converter during driving can cause damage to the alumina monolith thereby lowering its conversion efficiency as well as cause damage to the container and to the vehicle or possibly cause fire hazard. Engine malfunction that can cause catalytic converter overtemperature are:

- Spark plug fouling at one or more cylinders
- Defective electric fuel pump or fuel filter clogged (too low fuel pressure)
- Defective injector (s)
- Air filter element verty dirty
- Engine accelerator control linkage out of setting
- Engine and related devices not set to Factory specifications
- Leaks at the exhaust pipe upstream of the exh sensor
- Faulty pressure regulator
- Thermocouple (or relevent circuit) broken
- Too low a battery voltage (or defective charging circuit)

Driving methods that can cause catalyst overtemperature are:

— Use of wrong gears

— Too low level in the fuel tank

— Engine overloading for prolonged time e.g. when racing the engine, pulling trailers or climbing long hills or grades

— Driving or coasting with the ignition turned off

Then, when "EXH. TEMP." warning lamp is flashing indicating abnormal catalyst temperature, the driver **must reduce the engine load** by easing up on the accelerator pedal. If after a certain period the lamp does not stop flashing or if it stays lit permanently, indicating a further increase of the temperature, there is evidence of need for possible engine maintenance.

We reccommend that the car be driven slowly to the nearest Alfa Romeo dealer for diagnosis of the cause of the overtemperature.

B 3 PRECAUTIONS TO BE TAKEN IN CATALYTIC EQUIPPED MODELS

Document owned by La Belle Auto, XH-2006
© Alfa Romeo

1 - Use only unleaded gasoline

2 - Avoid the fuel tank from becoming empty

3 - Do not ever operate the engine with a spark plug lead disconnected and do not ever ground spark plug

4 - Don't exceed overloading the engine for prolonged period. Be careful when pulling trailers or when climbing long hills or grades

5 - Avoid turning of ignition while driving in any condition or coasting. Vehicle must be stopped before shutdown

6 - Avoid parking over or in vicinity of combustible materials such as: dry grass, spilled fuel, dry leaves, rubbish, etc.

7 - Cylinder compression checking must be made after having removed the fuse protecting the fuel pump in order to avoid injecting fuel

8 - Do not tamper with any component of the emission control system. It is prohibited by law (see WARNING on page 2)

9 - Do not discard spent catalytic converter in with flammable refuse

10 - Have maintenance operations performed as prescribed in the Owner's Operational Manual. The perfect maintenance of the engine is the main factor for the life of the catalytic converter.

C REGULAR SERVICING

C 1 CLEANING OR CHANGING THE AIR CLEANER

Release the five clips 1 securing the cleaner cover to the cleaner pan and raise the cover just enough to get the filtering element out of the cleaner, paying attention not to strain the duct.

On refitting, take care to position the element correctly (a mark on one side of the element indicates which is the top side).

Refit the cleaner cover and secure it with all clips.

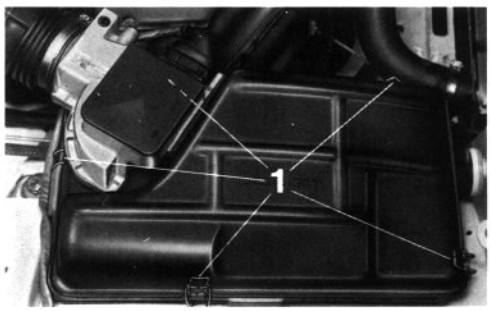

C 2 CHANGING OR ADJUSTING THE ALTERNATOR AND COOLANT PUMP DRIVE BELT

Tension adjustment

The tension is correct when on pressing the belt down by applying a load of abt. 8 kg, the amount of play is approximately 1/2 in. (10-15 mm).

To tighten the belt unscrew the nuts 1 and 2 on the adjusting arm and bolt 3. Move the alternator outward to increase the belt tension and re-tighten nut 2: re-check the belt tension.

Tighten bolt 3 and nut 1.

Document owned by La Belle Auto, XH-2006
© Alfa Romeo

Changing the belt

Slacken nut 2, bolt 3 and nut 1.

Move the alternator inward and remove the old belt. Fit the new belt to the three pulleys and move the alternator until belt tension is as specified. Then, securely tighten nut 2 and check belt tension; tighten bolt 3 and nut 1.

Note: prior to change the alternator drive belt remove the drive belt of the air conditioner compressor.

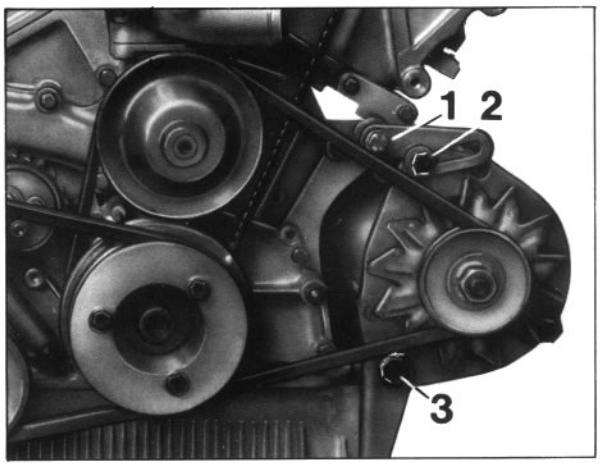

C 3 CHECKING THE TENSION OF A/C COMPRESSOR DRIVE BELT

The tension is correct when on pressing the belt down, the amount of play is about 10 mm. To adjust, slacken the bolts 1 and 2 securing the tensioner 3 and move the tensioner as required. Re-tighten bolt 2, check belt tension, then tighten bolt 1.

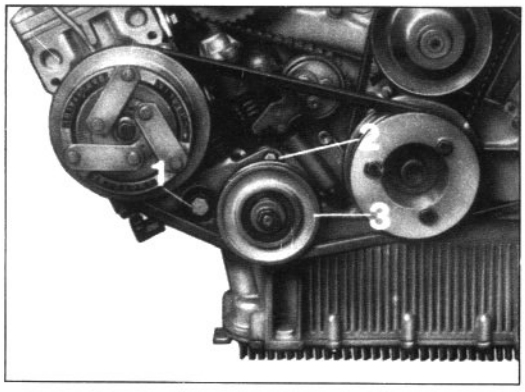

C 4 TIGHTENING TORQUES

— Cylinder head nuts

1) When fitting the cylinder heads, proceed as follows:
With the engine cold, tighten progressively in the sequence shown, after having previously lubricated the washer, nut and stud 8 kgm (57.9 ft. lbs)

2) After approx. 1,500 miles and engine cold, slacken the nuts by one turn and retighten the nuts in the sequence indicated, after having previously oiled the surfaces of washer and nut 9 kgm (65.1 ft. lbs)

N.B.: When carrying out the 1,500 mile service (free service coupon) proceed as indicated in item 2 above.

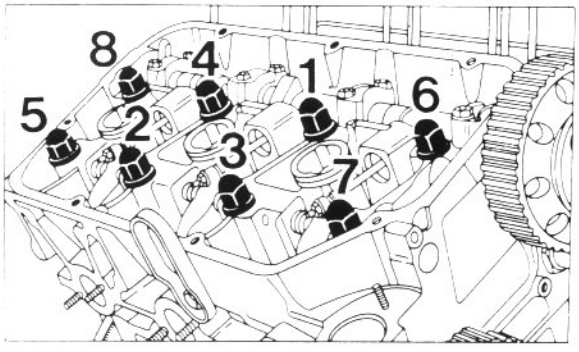

Document owned by La Belle Auto, XH-2006
© Alfa Romeo

N.B.: The sequence shown on the above illustration is for the RH cylinder head.
The tightening sequence is symmetrical for the LH cylinder head.

— Main bearing cap nuts (oiled) . . . . . 7.8-8 kgm (56.4-57.9 ft. lbs)

— Main bearing cap locknuts (oiled) . . . . . 2-2.4 kgm (14.5-17.4 ft. lbs)

— Connecting rod nuts (oiled) . . . . . 4.7-5.2 kgm (34-37.6 ft. lbs)

— Crankshaft pulled retaining nut (oiled) . . . . . 24 kgm (173.6 ft. lbs)

— Flywheel retaining nuts (using Loctite 270 sealant) . . . . . 11.5 kgm (83.1 ft. lbs)

— Camshaft bearing caps (oiled) . . . . . 2-2.2 kgm (14.5-15.9 ft. lbs)

— Camshaft hub retaining nut . . . . . 9.9-11.9 kgm (71.6-36 ft. lbs)

— Camshaft belt tensioner pulley bolt (using Loctite 270 sealant) . . . . . 1.7-2 kgm (12.3-14.5 ft. lbs)

C 5 SPARK PLUGS AND FIRING ORDER

The standard plugs fitted to the engine are LODGE HLE

- The spark plugs are of the surface gap type with four points and central electrode, which due to their superior performance characteristics during all driving conditions when compared to conventional type spark plugs, require no regular maintenance other than replacement at the required service interval (consult maintenance schedule).
  No routine adjustment is necessary of the gap between the electrode and points.
- If the ceramic insulator is cracked or the eletrodes are excessively worn away, the spark plugs must be replaced.
- Use of spark plugs which do not meet identical performance specifications or are dimensionally different can promote serious engine damage as well as alter emission levels
- Prior to remove the spark plugs it is necessary to withdraw the extension by pulling on the rubber cap.
- Remove the spark plugs.
- On refitting, after having tightened the spark plugs to a torque of 2.5-3.5 kgm (18-25.3 lb-ft.)(when engine is cold), make certain the extension makes a reliable mechanical and electrical connection with the wire.
- If doubt exhits, slide the rubber cap along the wire and by holding the wire steady, fully screw in the extension; then, bring the rubber cap back over the extension. Fit the extension onto the spark plugs.

Note: when renewing the spark plugs reconnect wires according to firing order and make sure no one of plug wires is disconnected since this will seriously damage the catalytic converter.

Firing order: 1-4-2-5-3-6.

Document owned by La Belle Auto, XH-2006
© Alfa Romeo

C 6 CHECKING AND ADJUSTING THE VALVE CLEARANCE

- Loosen the four retainers securing the air cleaner cover **10** and remove the cover.
- Disconnect the potentiometer connector **1** from the air flow sensor assy.
- Remove the oil decanter **2** from the cylinder head.
- Detach:
  - The air pipe **3** connecting the decel valve to the air flow sensor duct.
  - The pipe **4** from pressure regulator.
  - The two pipes and the wire from the auxiliary air device **5**
  - The pipe from the cold start valve **6**
  - The pipe **7** from the idle by-pass adjuster.
  - The two vacuum pipes **8** (upper and lower) from the throttle body.

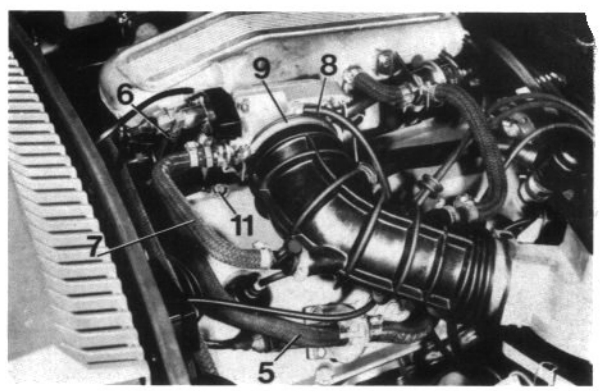

— Loosen the strap **9** securing the air flow sensor duct and remove the duct.

— Take away the ignition distributor protective shells and remove distributor cap and the wire bundle as a unit.

— Loosen the two screws **11** and remove the ground cables.

— Remove the spark plugs.

— Loosen the screws and remove the valve covers.

— With a torque wrench and according to the sequence shown check that the tightening torque of cylinder head nuts is 8 kgm (78 Nm).

To check the intake valve clearance, proceed as the follows:

— Fit a dial gage 1 to the tool **2** (T. no. C.6. 0178); set the gage to zero with tool **3** (T. no. C.6. 0182);

- Rotate the crankshaft until it is possible to locate the tool **2** on the cam of the valve tobe adjusted.
- The intake valve clearance should be **0.475-0.500 mm** with engine cold.

If the intake valve clearance requires adjustment, the following procedure should be complied with:

- Rotate the crankshaft until the mark P-F on engine pulley and the reference pin are aligned; as a consequence the markers on camshafts must be in line with the reference ones on the bearing caps.

Document owned by La Belle Auto, XH-2006
© Alfa Romeo

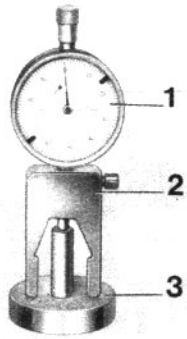

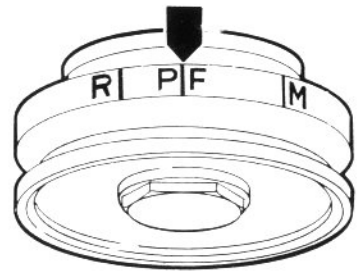

- Remove the covers from the plastic housing of the timing belt.
- With the aid of tool A.2.0361, for holding the camshaft stationary, and a suitable wrench, unscrew the nut securing the pulley to the camshaft.
- Loosen the three screws, fit tool A.3.0521 and remove the hub and the toothed pulley.

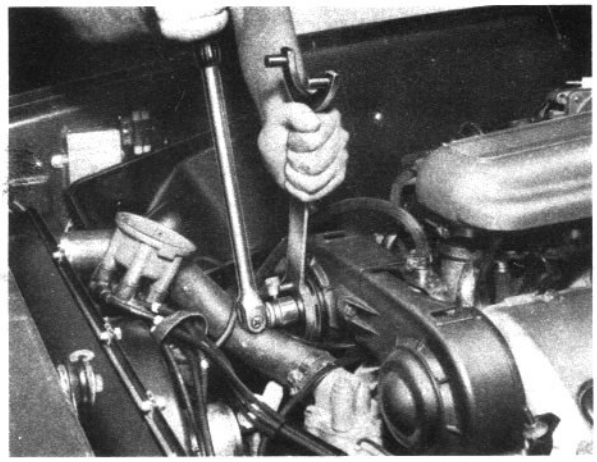

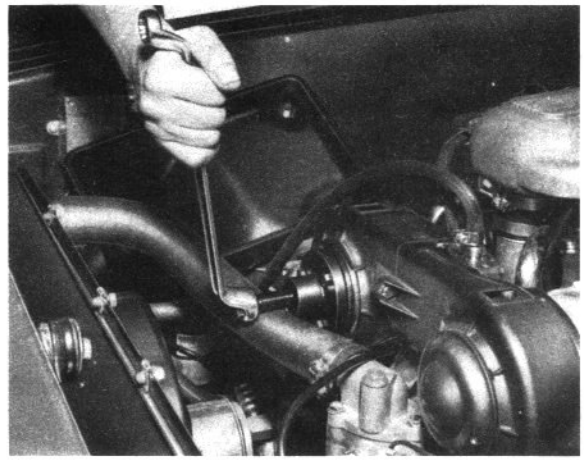

- Remove the camshaft bearing caps and take the camshaft away by raising it at the rear first.
- Withdraw the valve cups and collect the adjusting pads below them.
- Measure the thickness of the adjusting pads with the dial gage tool no. C.1.0108. Select pads from the pad set according to the difference established previously to restore the clearance to the specified value.
- Lubricate the valve cups with engine oil and refit them; re-install the camshaft and the bearing caps.
- Tighten the bearing cap nuts to a torque of 2-2.25 kgm (20-23 Nm) and again check the valve clearance.
- Re-install the pulley, the hub complete with the rubber ring and tighten the three screws.
- Screw in the nut securing the pulley to the camshaft; then, holding the pulley stationary with tool A.2.0361, torque the nut to 9.9-11.9 kgm (97-117 Nm). Securely tighten the three hub screws.

— To check and adjust the exhaust valve clearance use tool A.5.0220 and proceed as follows:
  - loosen nut 1 by rotating lever 2;
  - rotate wrench 3 until the specified clearance, as read with the feeler gage 4, is obtained. The specified exhaust valve clearance (engine cold) is **0.225-0.250 mm**
  - Tighten nut 1 and again check valve clearance.

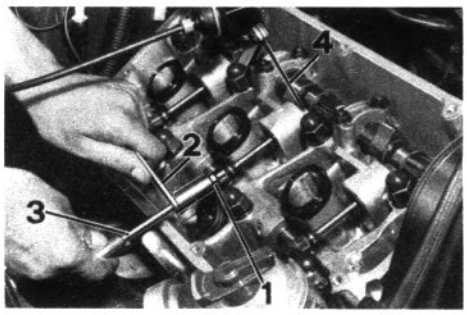

VALVE CLEARANCE AND VALVE TIMING DIAGRAM

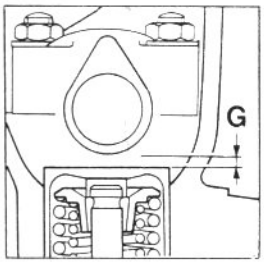

Intake valve clearance
G = 0.475-0.500 mm

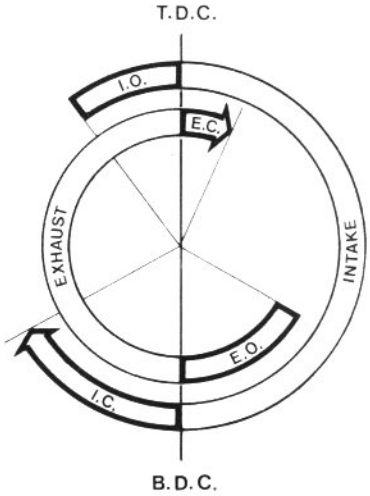

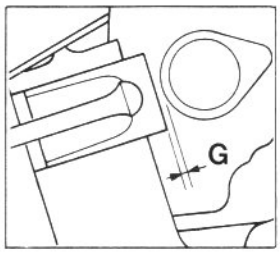

Exhaust valve clearance
G = 0.225-0.250 mm

I.O. = Intake opens 36° 50′ before T.D.C.
E.O. = Exhaust opens 59° 55′ before B.D.C.
I.C = Intake closes 60° 50′ after B.D.C.
E.C. = Exhaust closes 23° 55′ after T.D.C.

Induction stroke = 277° 40′
Exhaust stroke = 263° 50′

Document owned by La Belle Auto, XH-2006
© Alfa Romeo

C 7 ADJUSTING THE IDLE SPEED

The idle adjustment must be performed with the engine at operating temperature, gearbox in neutral and all accessory equipment off.

- Loosen the idle by-pass adjuster locknut 1, turn the adjuster ring until engine speed is 800-1000 RPM; retighten locknut 1.

ADJUSTING CO% AT IDLE

The reading of values of carbon monoxide must be taken exclusively with NDIR instrumentation from the tap upstream of the catalytic converter.

- Disconnect the connector **2** of the lead from the lambda sensor 3.
- With tool A.5.0212, remove the screw at the exhaust gas tap; in its place fit the tool C.2.0051 (item 4) and connect it to the analyser; CO percentage should fall between **0.5-0.7 % (lambda sensor disconnected)**.
- If the CO percentage exceeds the above stated limit, reset the adjusting screw 5 (hidden by the seal 6) on the air flow sensor assy.
- Remove air flow sensor.
- Place unit in holding fixture (or vise) taking care not to warp or damage housing.
- Drill hole into idle adjustment aluminum plug but do not drill through completely as you will make damage to adjuster.
- Blow out chips with air.
- Insert tap suitable for hole drilled.
- Twist tap until sufficient thread bite is achieved.
- Remove plug by pulling directly upward as if you were pulling a bottle cork.
- Adjuster screw is now accessible.
- Install air flow sensor on vehicle and make adjustment with engine running, after engine has reached normal operating temperature.
- Following adjustment reseal idle access hole by pressing in new plug seal.

Document owned by La Belle Auto, XH-2006
© Alfa Romeo

Then, check whether the idle speed is 800-1000 RPM; if not, re-adjust as directed in the preceding paragraph.

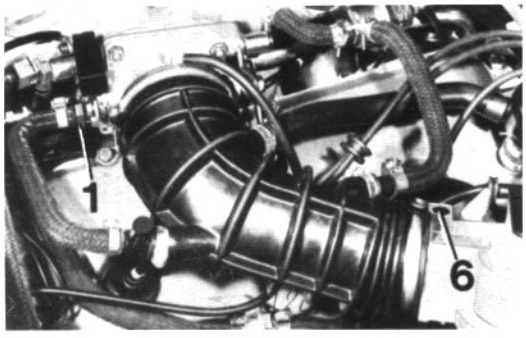

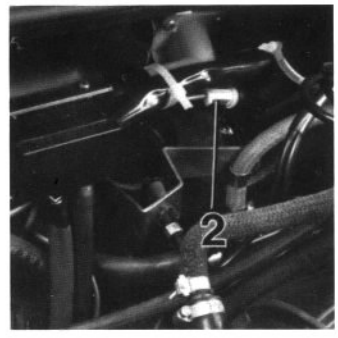

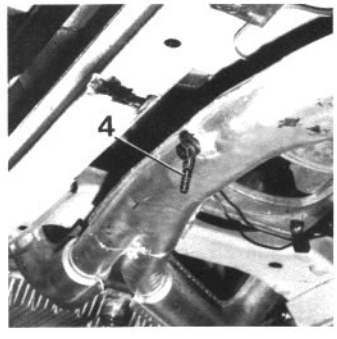

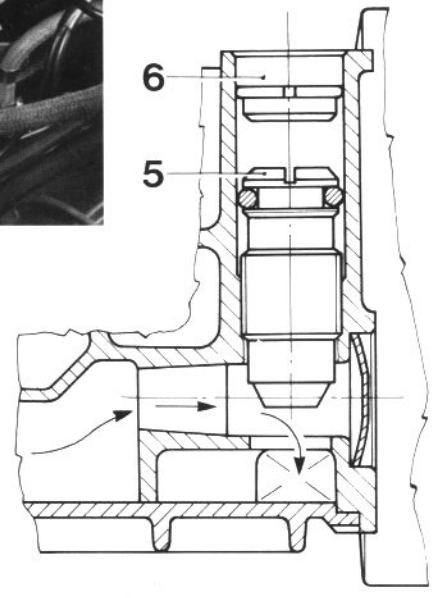

C 8 SUBSTITUTING THE LAMBDA SENSOR

– A continous red light on the dash board, bearing the word EXH. SENSOR, reminds that the vehicle has accumulated 30,000 miles and that the lambda sensor needs to the replaced. Proceed as follows:

- From inside the engine compartment, disconnect the lambda sensor lead connector 2.
- From the underside of car remove the rubber cap 1 then the metal cover; fully loosen the nut, withdraw the sensor from the exhaust pipe; remove the sensor and the relevant lead.
- Apply R. Gori Never Seez or Bosch 5.964.080.105 grease to the sensor mount threads; screw the sensor into its adapter and tighten securely.
- Fit the metal cover and the rubber cap to the sensor.
- Reconnect the connector **2** to the sensor lead.
- Once the substitution of the lambda sensor has been performed, it is needed to reset the counter by pushing the reset button **3** on the counter itself.

Location of mileage counter is at the right fender skirt under the dash board cowl. Remove the control unit cover panel and the passenger's parcel shelf by loosening the side screws.

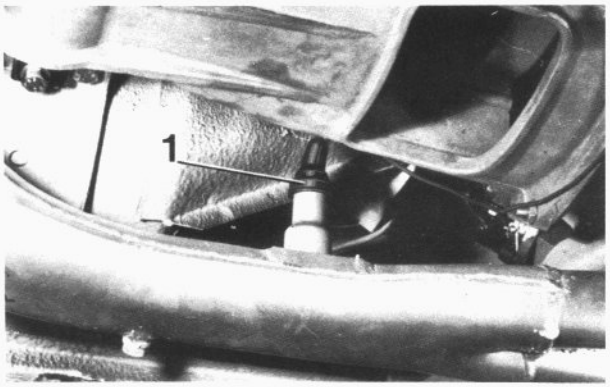

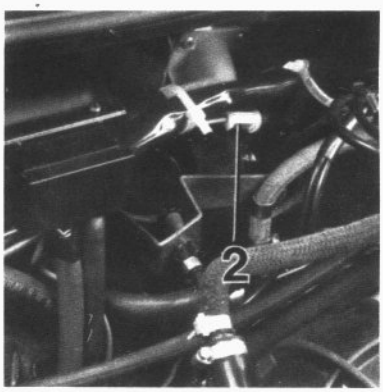

Document owned by La Belle Auto, XH-2006
© Alfa Romeo

TEST CONCEPT FOR VEHICLES WITH LAMBDA CLOSED-LOOP CONTROL AND L-JETRONIC

Document owned by La Belle Auto, XH-2006
© Alfa Romeo

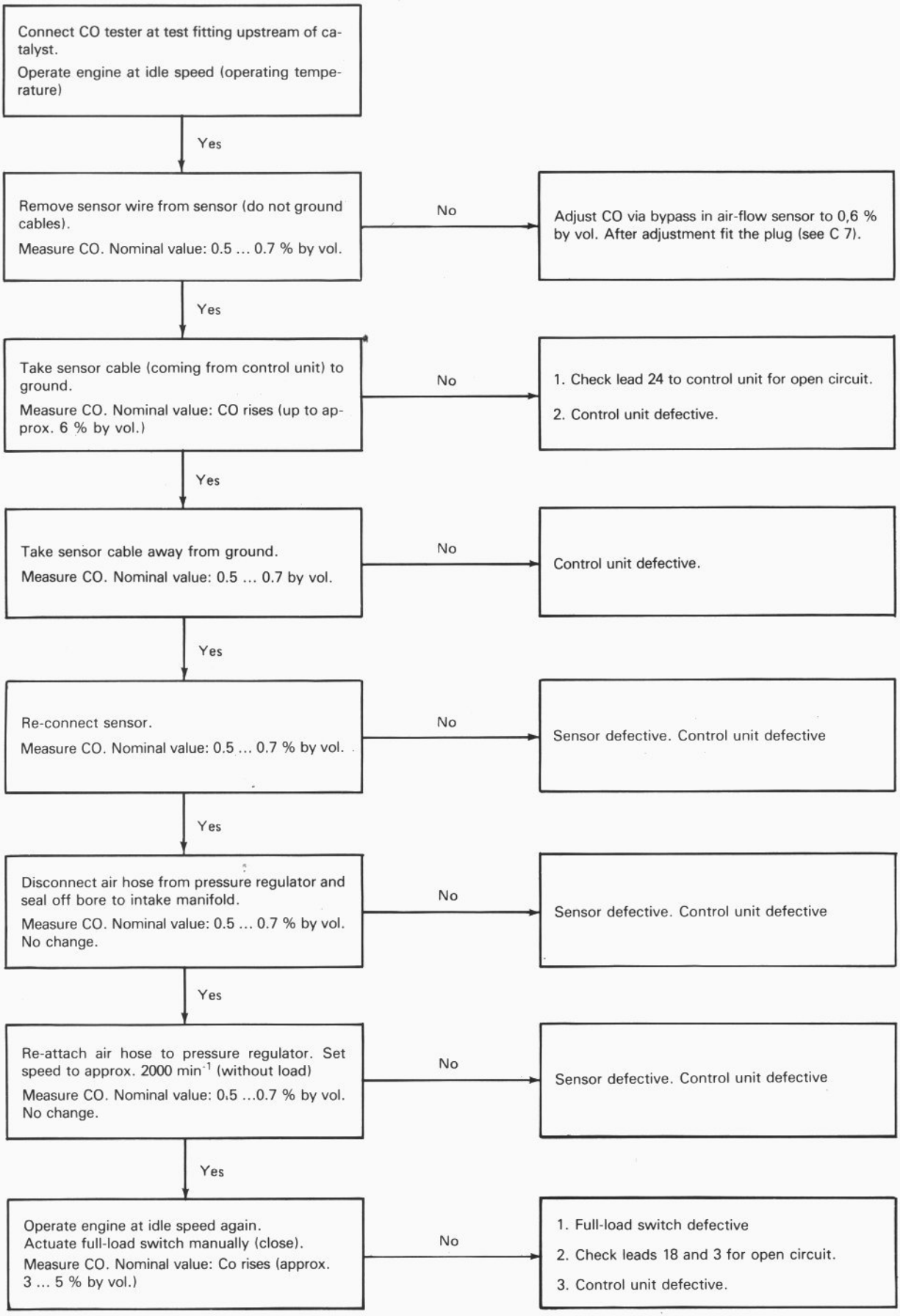

D DIAGNOSTIC PROCEDURES AND REPAIRS

D 1 RENEWING THE TIMING BELT

- Loosen the four retainers securing the air cleaner cover 10 and remove the cover.
- Disconnect the potentiometer connector 1 from the air flow sensor assy.
- Remove the oil decanter 2 from the cylinder head.
- Detach:
  - the air pipe 3 connecting decel valve to the air flow sensor duct;
  - the pipe 4 from pressure regulator;
  - the two pipes and the wire from the auxiliary air device 5;
  - the pipe from the cold start valve 6;
  - the pipe 7 from the idle by-pass adjuster;
  - the two pipes 8 (upper and lower) from the throttle body;
- Loosen the strap 9 securing the air flow sensor duct and remove the duct.
- Take away the ignition distributor protective shells and remove distributor cap and the wire bundle as a unit.
- Disconnect the 11 two ground cables by loosening the two screws at the valve covers.

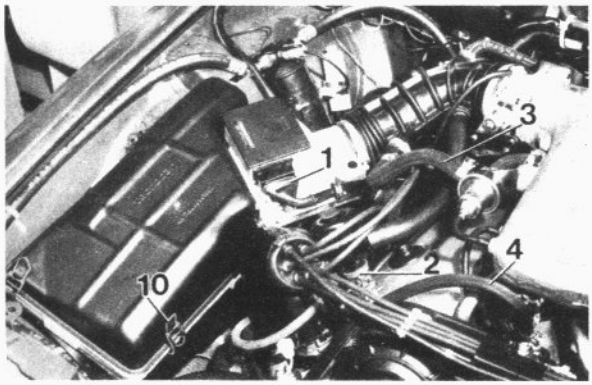

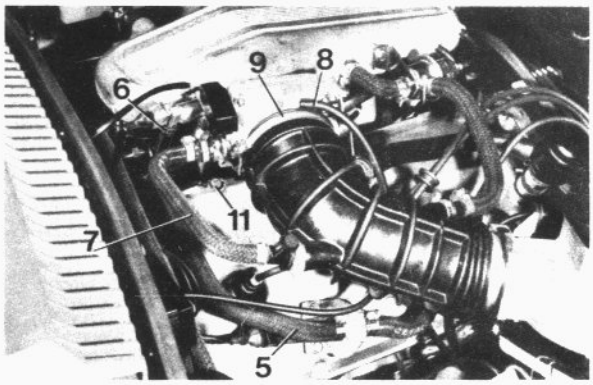

- Loosen the securing screws and remove the valve covers.
- Remove the compressor drive belt by loosening the tensioner securing screws.
- Remove the alternator drive belt by loosening the securing screw.
- Slacken the clips fastening the spark plug wires bundle and loosen the screws securing the timing belt cover; remove the cover.
- Remove the spark plugs so as to accomplish more easily the next steps.
- Rotate the camshaft pulley in normal direction of rotation until the mark PF lines up with the reference pin. In this condition the cylinder no. 1 piston should be at the TDC with both valves closed on compression stroke; to ascertain whether the above condition is met, remove the distributor cap and check that the rotor arm is pointing toward the reference notch on the edge of distributor body.

Document owned by La Belle Auto, XH-2006
© Alfa Romeo

— Pry up the arm 1 of tensioner and hold it upward by inserting the locking pin 2 (tool no. A.2.0363) into the hole in the tensioner arm.

— Loosen the tensioner securing nut 3 and nut 4 then press the tensioner all the way downward and tighten nut 4.

— At this stage the driving belt can be taken off the pulleys.

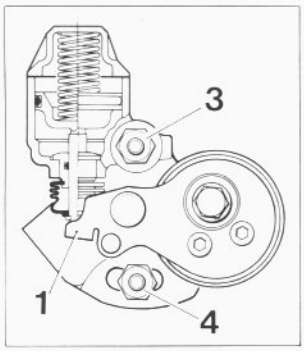

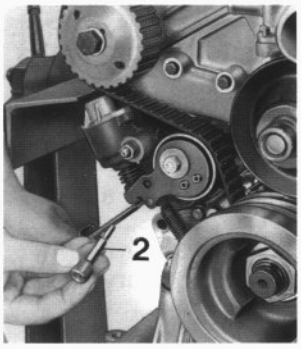

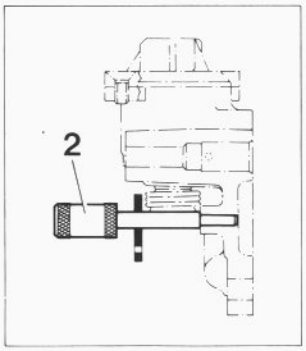

D 2 FITTING THE TIMING BELT

— Prior to fit the belt to the pulleys, make certain the marks on the camshaft and those on the relevant bearing cap are aligned; this check should of course be performed on both banks; also check whether the rotor arm and the reference notch on edge of distributor body are in line.

CAUTION — While going through the following steps always keep a watchful eye on the above mentioned reference marks: they must stay aligned throughout the belt fitment sequence.

— Fit the belt to the pulleys in the following order taking care to maintain under tension the leading section of the belt:
1st crankshaft toothed pulley; 2nd right bank pulley; 3rd left bank pulley; 4th distributor drive pulley; 5th tensioner

— To tension the belt, loosen tensioner nut 4 and check whether the reference marks both at camshaft and at the distributor rotor arm are still aligned.

— Rotate the crankshaft pulley by two turns clockwise and stop turning as soon as the mark P-F on crankshaft pulley is in line with the reference pin.

— Hold the crankshaft pulley steady with a wrench and tighten the tensioner nuts 3 and 4. Recheck reference marks alignment.

— Pull up slightly the tensioner arm, remove the locking pin to free the tensioner arm.

— Again rotate the crankshaft pulley by two turns clockwise and stop when mark P-F and reference pin are aligned.

Document owned by La Belle Auto, XH-2006
© Alfa Romeo

D 3 ADJUSTING THE TIMING BELT TENSION

— Remove the timing belt cover by loosening the screws securing the cover itself to the cylinder block and the screw holding together the two cover section.

— Pry up the tensioner arm **1**, then insert the locking pin **2** (tool no. A.2.0363) into the hole in the arm.

— Loosen nuts **3** and **4**, push the tensioner against the belt and tighten nuts **3** and **4**.

NOTE: Loosening nuts **3** and **4** should be enough to take up all belt sag; it is however advisable to push the tensioner against the belt as an aid in putting the belt under proper tension.

— Raise the tensioner arm and remove the locking pin to free the arm.

D 4 CHECKING AND ADJUSTING THE IGNITION TIMING

To check the ignition timing use a stroboscopic timing light and follow this procedure:

— warm the engine up to operating temperature;

— the engine must run at idling speed;

WARNING: a very accurate check of the timing at idle speed has to be performed since incorrect timing at idle greatly affects exhaust emissions.

— Connect a jumper across the timing light and the ignition distributor terminal for cylinder no. 1 spark plug; finally, connect the positive (+) and negative (—) leads of timing light to the relevant battery terminals.

— Start the engine and check for the following:

- with engine running at idle (800-1000 RPM), see whether the mark **R** (on crankshaft pulley) is in line with the reference pin (5° ± 1° ATDC) or apart from the pin by a distance not exceeding ± 2 mm (with vacuum hoses connected)·
- with engine running at 5000 RPM and the vacuum pipe 2 (the upper one) disconnected, check whether the mark **M** is aligned with the reference pin (26°-29° BTDC) or apart from the pin of a distance not exceeding 3 mm.

— If the timing requires adjustment, proceed as follows:

- unscrew the distributor securing nut **1** on the stud so as to allow the distributor to be rotated together with its supporting clamp;
- rotate the distributor body counter-clockwise or clockwise according to whether it is necessary to respectively advance or retard the ignition setting;
- retighten the nut, taking care not to move the distributor body;
- recheck timing.

— To inspect the vacuum retardation regulator for proper operation check whether engine RPMs rise as the vacuum connection pipe is disconnected.

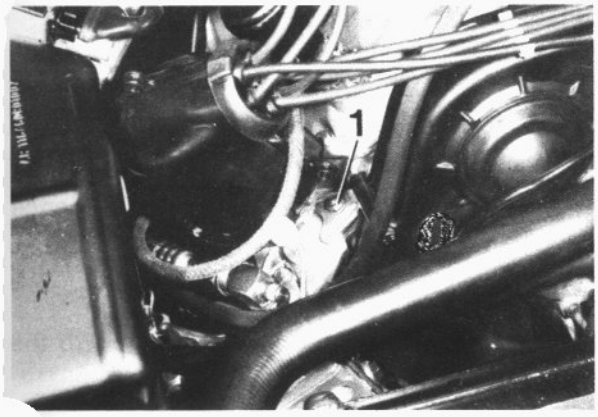

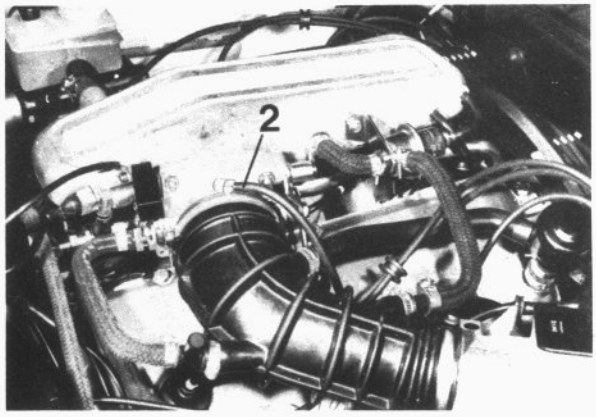

Document owned by La Belle Auto, XH-2006
© Alfa Romeo

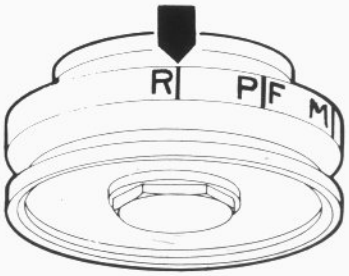

D 5 IGNITION DISTRIBUTOR

The breakerless, electronic ignition system features reliability and performance levels constantly higher than the conventional systems; furthermore, the need for regular inspection and maintenance operation is reduced to a minimum.

Occasionally, apply some drops of engine oil to the felt after having removed the cap and the rotor arm.

Inspect the cap for no sign of cracking or burning.

AUTOMATIC ADVANCE GRAPH

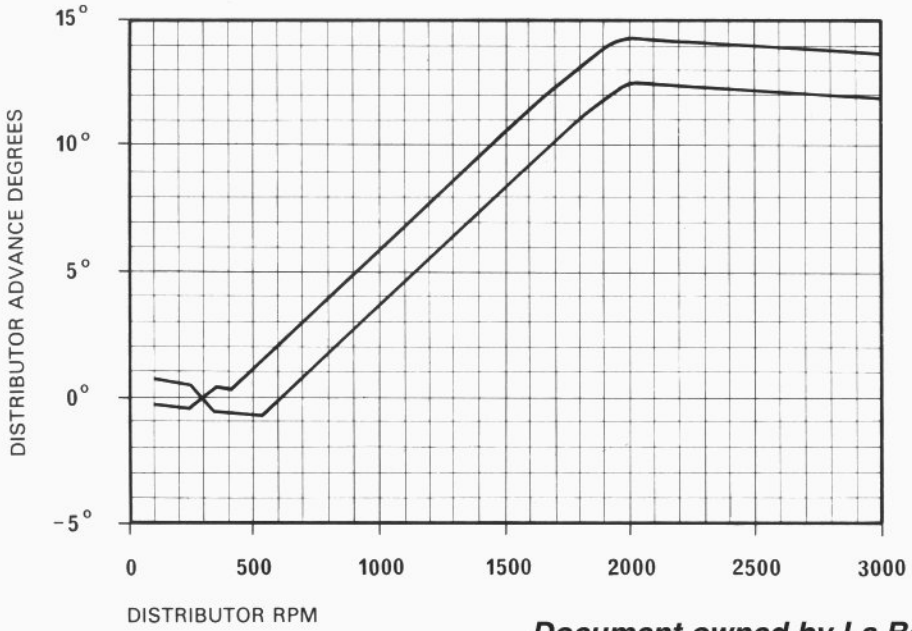

Document owned by La Belle Auto, XH-2006
© Alfa Romeo

D 6 INSTALLING AND TIMING THE DISTRIBUTOR

To install the distributor, proceed as follows:

- Rotate the crankshaft to bring no. 1 cylinder piston to the compression stroke (both valves closed);
- By slightly rotating the crankshaft bring the mark PF on pulley into line with the reference pointer;
- Fit the distributor;
- Remove the distributor cap and rotate the drive shaft to bring the rotor arm in line with the contact for no. 1 cylinder;
- Refit the cap and adjust timing with a stroboscopic light.

1 Keying tooth
2 Rotor arm to 1st cylinder
3 R.H. cylinder head
4 Cap retaining clip

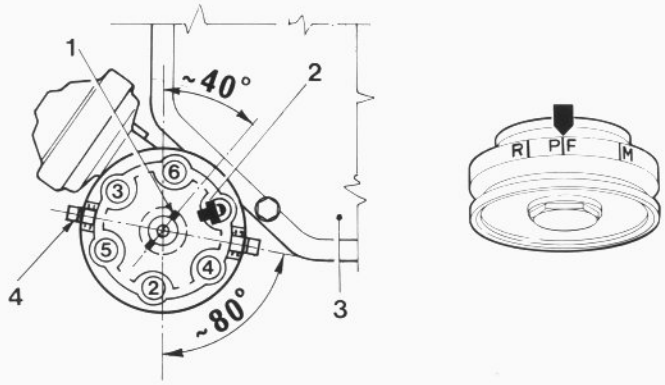

D 7 SETTING THE THROTTLE LINKAGE

Operate the lever **5** by hand to check whether the accelerator pedal free travel **A** is 1-2 mm and the throttle lever **6** does not stir from its **6a** position. If this condition is not met, loosen locknut **10**, re-set free travel **A** by adjusting nut **9** then retighten locknut **10.**

Fully depress the accelerator pedal to check whether the clearance **C** between the throttle lever **6** and the limit stop **7** is 0.5-1 mm.If not so, unscrew or screw in the stop beneath the accelerator pedal.

With the accelerator pedal and the hand throttle control in their inoperative positions, there should be a clearance **B** of 5-6 mm between cable clamp **1** and accelerator pedal link **2**. To adjust this clearance, loosen the setscrew of clamp **1** and change the position of clamp.

Document owned by La Belle Auto, XH-2006
© Alfa Romeo

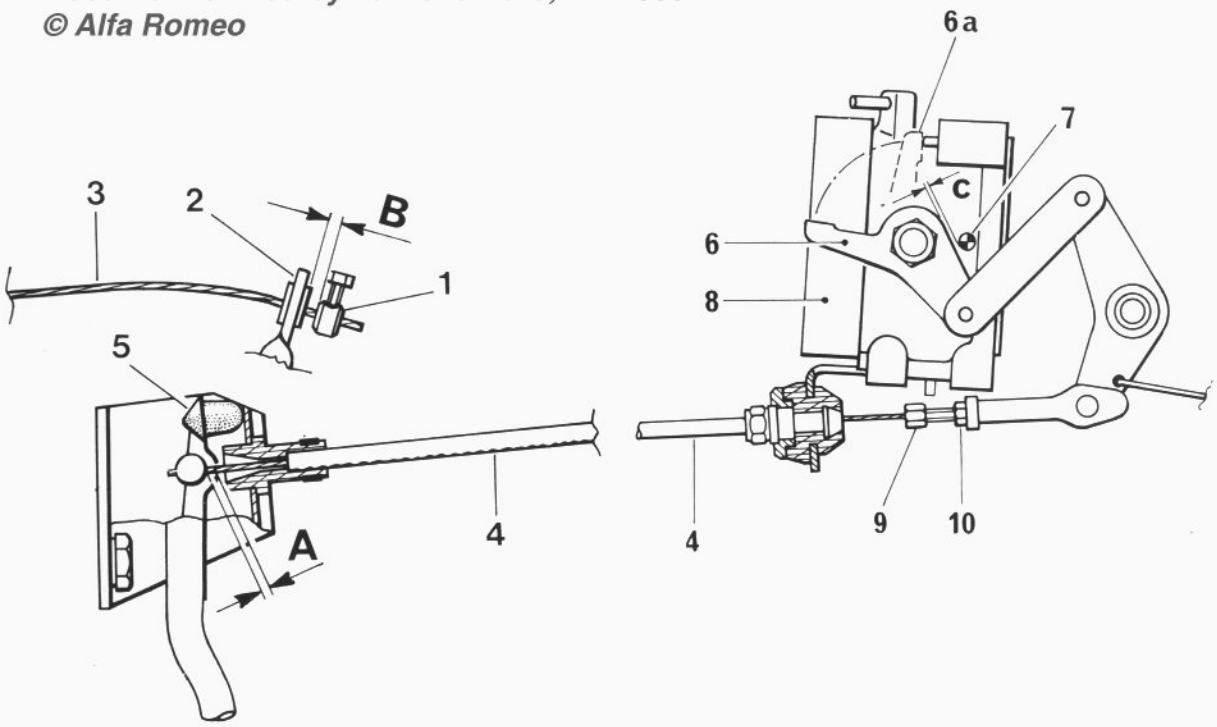

A — 1-2 mm
B — 5-6 mm
C — 0.5-1 mm
1 — Hand throttle cable clamp
2 — Accelerator pedal link
3 — Hand throttle cable
4 — Accelerator cable
5 — Pedal lever
6 — Throttle lever
7 — Limit stop
8 — Throttle body
9 — Adjusting nut
10 — Locknut

D 8 TESTING THE FUEL PRESSURE

- Disconnect the fuel ring inlet line 1; connect a pressure gage to a T-adapter; insert the T-adapter across the ends of inlet line previously disconnected.
- Detach the vacuum hose **2** connecting the fuel pressure regulator **3** to the intake manifold.
- Start the engine and, at idling speed, take a reading of the fuel pressure which should be 2.3-2.7 bar.
- Re-connect the vaccum hose to the intake manifold; at idle the fuel pressure must drop to abt. 0.5 bar and rise again on opening the throttle. If not, check the vacuum hose for possible leaks.

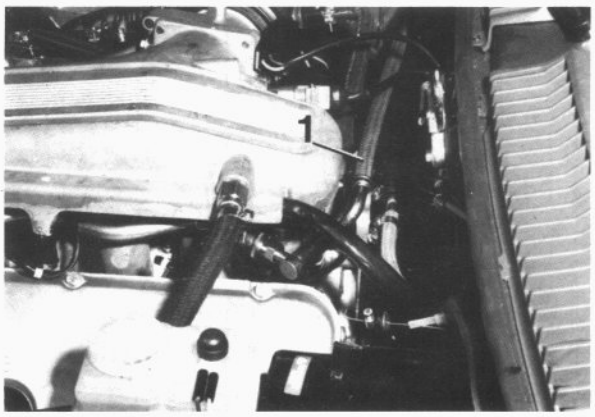

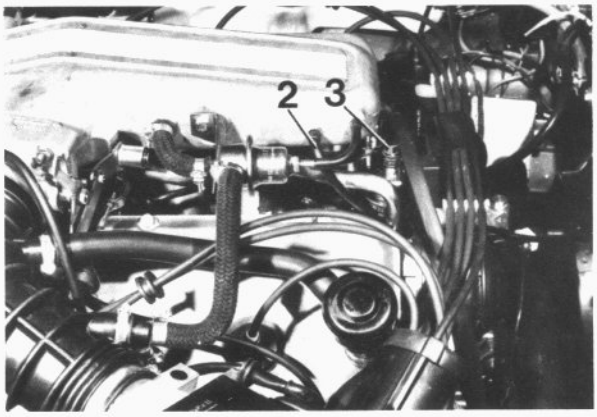

D 9 SUBSTITUTING THE FUEL FILTER AND THE FUEL PUMP

For substituting the fuel filter slacken, from the underside of car, the fuel inlet and outlet hoses and slacken the supporting clamp. On refitting the filter, make certain the arrow ➞ on filter is pointing toward the direction of fuel delivery to the injectors.

For substituting the fuel pump, loosen the two electric connections, slacken the clips and disconnect the inlet and outlet lines; finally, slacken the supporting clamp.

On refitting the fuel pump, pay attention not to change the positive wire over with the negative wire.

Document owned by La Belle Auto, XH-2006
© Alfa Romeo

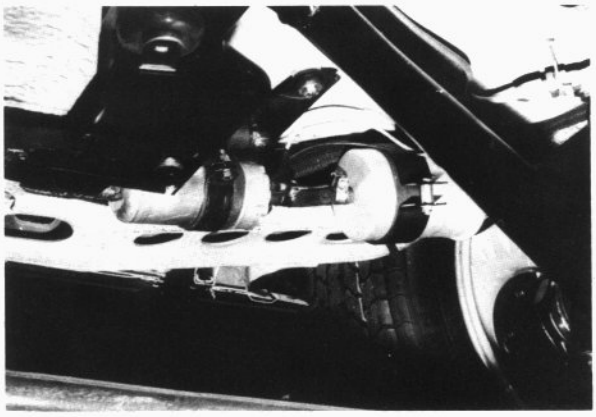

D 10 RENEWING THE INJECTORS

To renew the injectors proceed as follows:

- unfasten the clip and remove the vacuum pipe **1** of brake booster from the intake manifold;
- disconnect ground strap from intake manifold to cylinder head;
- disconnect the vacuum hose **2** from pressure regulator at intake manifold;
- disconnect the pipe **3** from the decel valve;
- disconnect the throttle cable **4**;
- disconnect the two pipes (upper and lower) of the advance control from the throttle body **5**;
- loosen the strap **6** fastening the throttle body to the air flow sensor duct;
- remove the pipe **7** from the auxiliary air device;
- disconnect by-pass pipe **8** at idle adjusting nut;
- remove the connector **9** from the cold start valve and disconnect the fuel inlet pipe;
- remove the connector **10** from the full load switch;
- remove the six connectors from the injectors;
- unfasten the six clamps (upper ones) on the six intake throats;
- remove the intake manifold.

Disconnect the fuel inlet pipe **11** from the fuel ring and the fuel outlet pipe **12** from the pressure regulator.

Loosen the twelve screws securing the injectors retainers.

- Remove the fuel ring complete with the injectors; let the fuel drain off from them.
- Cut the rubber pipe connecting the injector to the fuel ring; care should be taken not to damage the serrated adapter.
- Fit the retainer washer first, then the new injector complete with its rubber pipe onto the fuel ring adapter

WARNING — When installing the injector/rubber pipe assembly, make sure the electrical fitting is facing outward and slanting toward the pressure regulator.

Refit the components in reverse order of removal. Special attention should be paid for proper fitment of the sealing ring between injector and intake throat.

Document owned by La Belle Auto, XH-2006
© Alfa Romeo

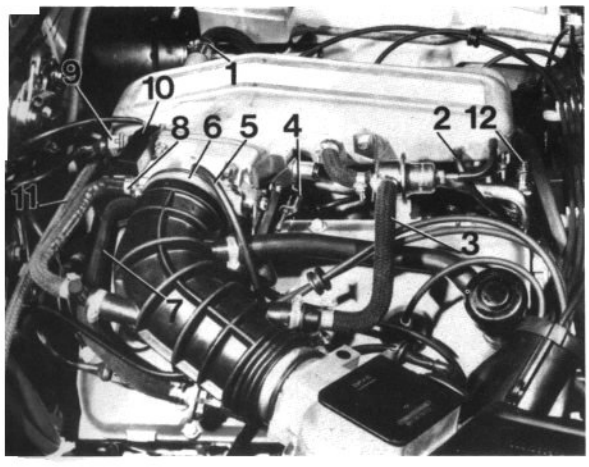

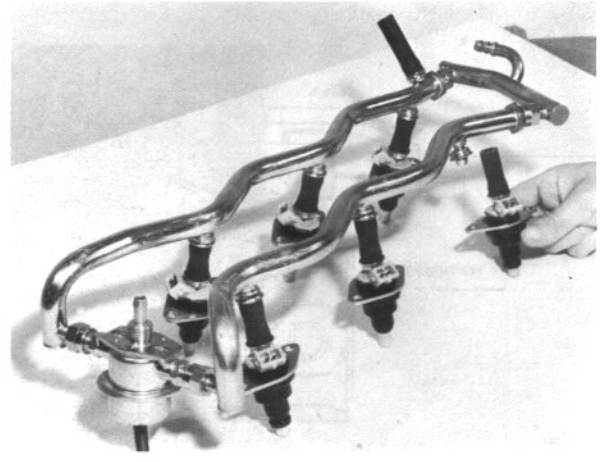

D 11 CHECKING THE AIR-FLOW SENSOR

In order to remove the air-flow sensor and check the floating flap for proper operation, release the four clips securing the air cleaner cover.

Unscrew the four fastening screws of the air-flow sensor from the inside of the top part of the air cleaner.

Deflect air-flow sensor flap completely (as far as it hits the limit stop).

Air-flow sensor flap must move freely with no sign of binding.

Remove dirt in the area of the air-flow sensor flap using a clean cloth free of lint.

After re-installation, test the concentration of CO in the exhaust gas and check the lambda sensor.

D 12 INSPECTING THE AIR-INTAKE DUCTING FOR LEAKS

In order to inspect the air-intake system for leaks, disconnect the duct downstream of the auxiliary-air device and blow thru with a compressed-air gun.

Open the throttle valve fully when doing this.

Using soapy water, brush or spray all sealing points.

Bubbles or the formation of foam indicate a leak.

D 13 SETTING THE FULL-LOAD SWITCH

Connect a lamp across switch terminals.

Turn the throttle spindle and check whether the contacts close (lamp light up) when the throttle is rotated by 58°. If this is not the case, loosen the two mounting screws (1) and rotate the switch.

To test the control unit efficiency connect together the full-load switch wires: the engine should turn at a slightly higher speed.

Document owned by La Belle Auto, XH-2006
© Alfa Romeo

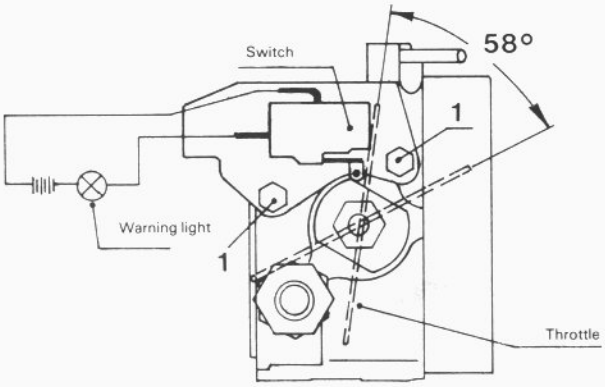

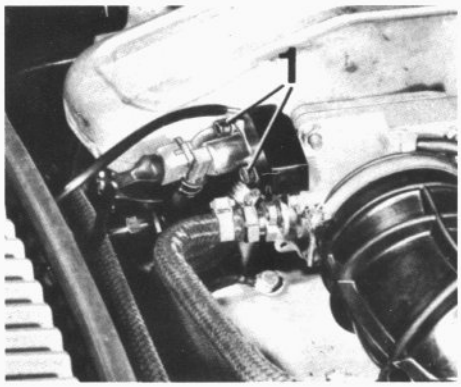

D 14 CHECKING THE RELAY SET

Check power supply to injectors switch on ignition. Using test lamp or voltmeter, measure voltage across term. 88z and ground as well as across term. 88b and ground

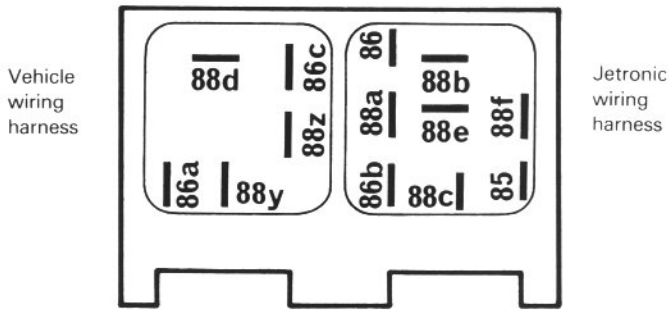

D 15 CHECKING THE THERMO-TIME SWITCH

The thermo time switch is so located as to sensing the coolant stream; the coolant must therefore be partially drained and collected during removal, of the switch. Check whether the resistance across switch terminals, with switch in-car and connector removed, falls within the limits stated below.

Resistance measurements across:

1. Term. "G" and ground (housing):
   below +30°C: 25 to 40 Ω
   above +40°C: 50 to 80 Ω
2. Term. "W" and ground (housing):
   below +30°C: 0 Ω
   above +40°C: 100 to 160 Ω
3. Term. "G" and term. "W"
   below +30°C: 25 to 40 Ω
   above +40°C: 50 to 80 Ω

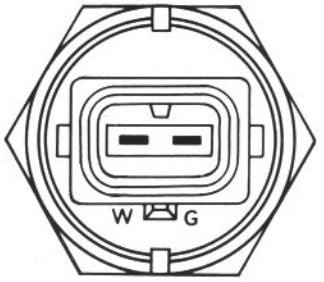

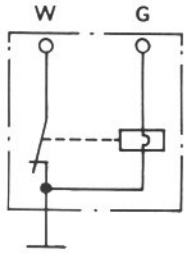

D 16 THE INERTIA SWITCH

Document owned by La Belle Auto, XH-2006
© Alfa Romeo

The inertia switch is in the engine compartment, on the right.

Purpose of this switch is to cut off the current fed to the electrical fuel pump in the event of an impact.

Pushing the switch button re-starts the fuel pump.

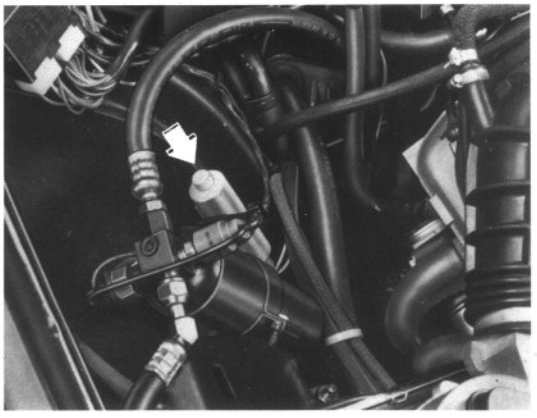

D 17 CHECKING THE CATALYST OVERTEMPERATURE WARNING DEVICE

— The check of the warning device is indirect.

— The warning device must be replaced in these cases:

1. When the warning light stays off when the ignition key is turned on and only after having tried the following steps and getting negative results:
   — Check the electric circuit of the "EXH. TEMP." warning light and the bulb
   — Check the power supply at the monitor box
2. When, with cold catalytic converter, the warning light flashes with key in on position.
3. When, with cold catalytic converter, after replacing the fuse, the light stays on continuously with ignition key on, after checking that the thermocouple functions.

NOTE: The fuse for the warning device is special fuse of 0,1 amp rating and fuses of higher value must never be used.

Removal reinstallation of the monitor
Location of warning device is at the right fender skirt under the dashboard cowl.

Remove the control unit cover panel and the passenger's parcel shelf by loosening the side screws.

Document owned by La Belle Auto, XH-2006
© Alfa Romeo

Disconnect the power wire.

Disconnect the terminals of the thermocouple.

Remove the clamping screw of the monitor.

Reconnect the thermocouple and the power wire of the monitor.

NOTE: The thermocouple must be connected before the power wire because the disconnecting of the thermocouple will cause rupture.

D 18 THERMOCOUPLE CHECK

Any checking of the thermocouple must be done after disconnecting the monitor.

— Disconnect a terminal of the thermocouple by loosening the screw on the warning device.

— Measure with a multimeter the resistance across the terminals of the thermocouple which should be:

$$R - 4.1 \begin{smallmatrix} +\ 0.9 \\ -\ 0.3 \end{smallmatrix} \text{ ohms}$$

— Measure the resistance of the insulation between each terminal and the braided metal sleeve; it should be:

$$Ri \geq 1 \text{ megohm } (1.000.000 \text{ ohms})$$

— R & R the thermocouple if any on the above steps give negative results.

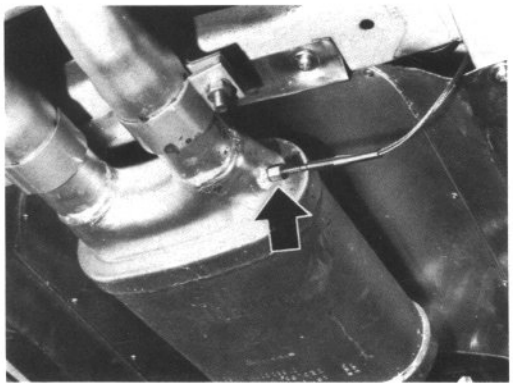

Removal & reinstallation of thermocouple

— Disconnect the terminal of the thermocouple from the monitor.

— Slide out the terminals from the engine compartment.

— Loosen the connection on the catalytic converter and screw out the themocouple.

For the reinstallation, repeat the same operations, only on reverse.

NOTE — The terminals of the thermocouple has different dimensions in order to avoid reversing polarity of the connection which would damage the monitor. Do not try to install them by forcing them on the screws.

D 19 CHECKING THE CATALYTIC CONVERTER

The catalytic converter has been designed to have a life of 50,000 miles without maintenance. However, if the car has been driven with the EXH. TEMP. light on permanently, it is possible that the catalyst has been damaged. In this case, a control of the catalyst has to be made after eliminating the reason for the lighting of the EXH. TEMP. light. In particular check that the emissions at idle (read upstream) are within the limits prescribed.

Document owned by La Belle Auto, XH-2006
© Alfa Romeo

Checking catalytic converter efficiency

The engine must be already stabilized at normal operating temperature.

— Run the engine in neutral at 2500-3000 RPMs for 2-3 minutes.

— Bring the engine to idle and after 30 seconds, check the HC which must be not more than 180 ppm.

If you can't meet the tailpipe to the above, replace the catalytic converter.

Removal and reinstallation of the catalytic converter.

Slide the thermocouple from the catalyst after loosening the fastening nut and after freening the hose from the clamp in proximity to the converter.

Remove the lambda sensor from the exhaust pipe.

Remove the exhaust pipe from the exhaust manifold.

Loosen and remove the two bolts 1 from the mounting pad bracket. Take away the front section of the exhaust pipe including the catalytic converter and fit the new one; remove the plug and refit the thermocouple.

Refit the lambda sensor.

D 20 FUEL EVAPORATIVE SYSTEM LEAKAGE DIAGNOSTIC PROCEDURE

Sympton

Fuel odor

Possible cause

Vapor leakages from systems connections, fittings or components.

Correction

Document owned by La Belle Auto, XH-2006
© Alfa Romeo

Procedure "A"

1. disconnect the vapor vent line from the oil separator in the engine compartment and blank off the line end
2. Remove the check valve and fit a T-adapter; connect the check valve to one outlet of the T-adapter and the air-cylinder or compressed air to the other outlet of the adapter.
   To gain access to the check valve located under the trim panel of the backshelf, disconnect the strut from the hatch, then remove cushion and seat back from the rear seat.
3. Pressurize the system with compressed air source until the pressure is 10 inches water then close the line. If 10 inches water is not obtainable, open pressure supply line and probe system for leaks (HC analyzer or "Snoop" leak detector).
4. Measure the pressure drop in this system, it should not exceed 0.5 inches water within 10 minutes.
5. If the pressure drop exceedes 0.5 inches water within 10 minutes, check for leakages by covering the connections and fittings with Snoop" leak detector or soapy water.
6. Bubbles will appear where leaks exist.
7. If leakage is found around the fuel cap/filler neck area, first replace fuel cap. If now OK, cap was defective, if no change, replace filler neck.
8. Replace suspect defective components or secure accordingly in the case of loose clamps, etc.
9. Perform step 3 and 4 again to prove correct diagnosis.
10. If after following above procedure, there is still some question as to leakages, see "Fuel Injection System Supply Leakage Diagnostic Procedure".

Alternate procedure "B" - Perform with fuel tank 3/4 full or more

1. Disconnect the vapor vent line from the oil separator in the engine compartment and blank off the line end.
2. Remove the check valve and fit a T-adapter; connect the check valve to one outlet of the T-adapter and the air cylinder or compressed air to the other outlet of T-adapter.
   To gain access to the check valve located under the trim panel of the backshelf, disconnect the strut from the hatch, then remove cushion and seat back from the rear seat.
3. Pressurize the system by use of propane injection into the vapor vent line until the pressure is 10 inches water.
4. Check for propane leaks from the system connections, fittings and components by means of a HC sensor (probe) connected to a HC analyzer.
5. Repair leak by replacement (or secure accordingly in the case of loose clamps, etc.).
6. Perform steps 3 and 4 above to prove correct diagnosis.
7. If after following above procedure, there is still some question as to leakages, see "Fuel Injection System Supply Leakage Diagnostic Procedure".

D 21 FUEL INJECTION SYSTEM SUPPLY LEAKAGE DIAGNOSTIC PROCEDURE

Symptom

Fuel odor or visible signs of fuel leakage.

Possible cause

Fuel leakage from system connections, fittings, or components.

Precautions

Have a fire extinguisher handy in the event of a fuel leak hazard - NO SMOKING!

Correction

1. Warm up engine to operating temperature.
2. Turn off ignition.

Document owned by La Belle Auto, XH-2006
© Alfa Romeo

3. Visually inspect all fuel system components and connections for signs of leakage.
4. Using an exhaust analyzer (NDIR), probe the entire system including all components and connections.
5. The HC analyzer's needle will react when the probe is in the area of a fuel leak.

   NOTE: This check should be performed slowly to allow for instrument reaction time delays.
6. After locating source of leak by steps 4 and/or 5 above, correct the leak by component replacement or tightening in the case of loose clamps, hoses, etc.
7. After completing step 6, start engine and let it idle for a few minutes, then turn off ignition.
8. Repeat steps 3 and 4 above as a double check to verify diagnostics and repair.
9. After completion of steps 1 thru 8, a road test of at least 30 minutes should follow, repeated by a final check to insure system security.

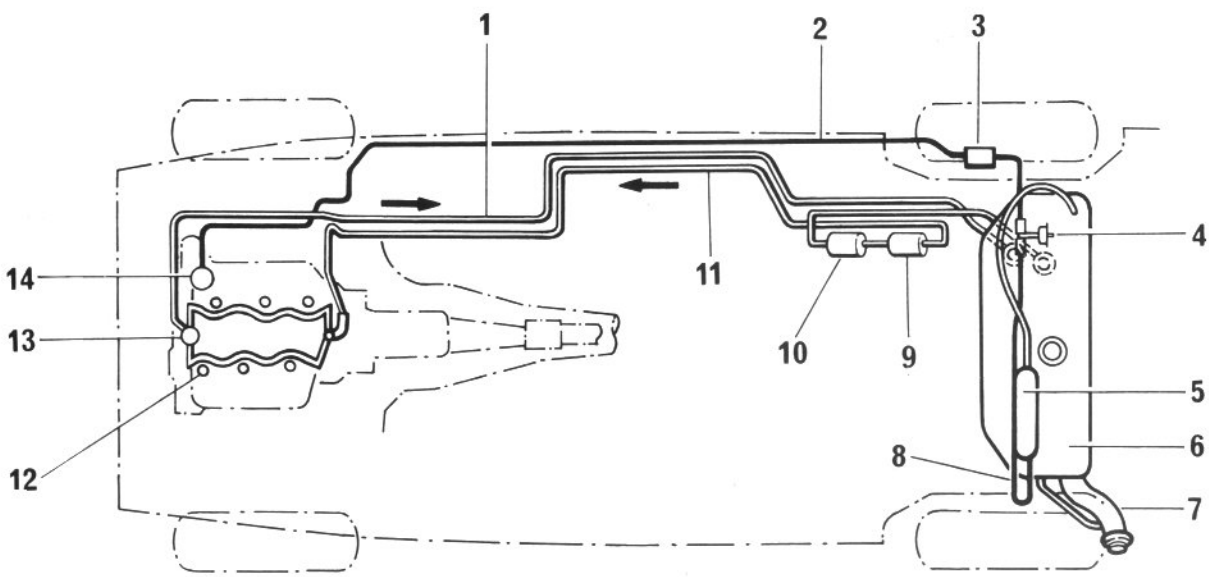

1. Fuel-return line
2. Fuel vapor line
3. Check valve
4. Air inlet valve
5. Expansion tank
6. Fuel tank
7. Fuel filler
8. Fuel tank vent line
9. Fuel filter
10. Fuel pump
11. Fuel feed line
12. Injector
13. Fuel pressure regulator
14. Oil separator

NOTE:

When using this throubleshooting chart it is assumed that the **engine** is in **proper working order**, that the **ignition** is **correctly adjusted** and that the **electrical system** has been **checked** and repaired, if necessary

TROUBLE									CAUSE	REMEDY - TEST NOTES
1. Engine does not start or starts only with difficulty	2. Engine starts and then cuts out again	3. Erratic idling	4. Poor thottle take-up	5. Combustion misses in all driving condition	6. Excessive fuel consumption	7. No peak output	8. CO concentration during idling too high	9. CO concentration during idling too low		
●	●								Relay set defective	Check voltage supply
●									Electric fuel pump not operating	Check pump fuse. Voltage at relay set and electric fuel pump? If yes, replace electric fuel pump
●									Start valve not opening	Resistance approx. 4 Ω Check spray discharge
●		●			●		●		Start valve leaking	Check for leaks under pressure
●									Thermo-time switch defective	Check switching point as per specification
●	●		●						Auxiliary-air device not opening	Visual inspection: Engine warm - device closed Engine cold - device open, electr. O.K.
		●							Auxiliary-air device not closing	Engine warm - device must be closed
●			●		●	●	●	●	Air-flow sensor defective	Check freedom of movement of air-flow sensor flap. Remove dirt
	●								Pump contact in air-flow sensor defective	Check resistance (between term. 36 and term. 39 ∞ Ω). Deflect air-flow sensor flap 0 Ω
●		●	●					●	Intake system leaking	Check intake manifold, bolted-on assemblies and all hose connections for leaks.
●		●			●	●		●	Fuel-injection valves defective	Check whether valves are pulsing by feeling.
●		●				●		●	Fuel pressure too low or zero	Check pressure, filter, fuel lines, pressure regulator
					●		●		Fuel pressure too high	Connecting hose, pressure regulator - intake manifold, plugged on? Fuel return line blocked or pinched. pressure regulator defective
●	●				●		●		Start control in control unit defective Start valve and thermo-time switch missing	Replace control unit
●	●				●		●		Temperature sensor II in engine defective	Measure resistance
		●							Throttle valve not closing	Stop throttle valve from jamming. Align throttle linkage. Then adjust throttle valve
						●			Throttle valve not opening fully	Set throttle linkage and accelerator cable to limit stop
				●					Bad central ground, loose contacts Defective plug-connection cables	Remedy fault
●	●	●	●	●	●	●	●	●	Break in wiring harness and plug-connection cables	Eliminate break
		●	●			●			Throttle-valve switch defective	Check adjustment. Check full-load and idle contacts
					●		●		CO exhaust gas setting too rich	Check idle and exhaust gas setting
		●						●	CO exhaust gas setting too lean	Check idle and exhaust gas setting
							●		Lambda sensor defective	See special test chart (pag. 20).
●	●	●	●	●	●	●			Control unit defective	Test using analogue tester

Document owned by La Belle Auto, XH-2006
© Alfa Romeo

D 23 IMPORTANT GENERAL INFORMATION

Never start engine without the battery cables being connected tightly.

Do not use a fast charger for starting engine.

Never disconnect battery from vehicle electrical system with engine in operation.

Disconnect battery from vehicle electrical system when fast charging.

Prior to testing the L-Jetronic, it must be ensured that the ignition is in order, i.e. it must comply with specifications.

Remove control unit at temperatures above 80°C (drying stove).

Ensure that all wiring harness connectors and terminal 1 are correctly attached.

Never connect or disconnect wiring harness plug of control unit with ignition switched on.

When testing compression, open circuit the **red** power supply lead between battery and relay set by disconnecting the plug-connection cable. This ensures that the voltage supply to the L-Jetronic and therefore also to the fuel-injection valves is interrupted. Undesired injection is theraby avoided.

WARNING: Damage may result to catalytic converter if above precaution is not adhered to.

Document owned by La Belle Auto, XH-2006
© Alfa Romeo

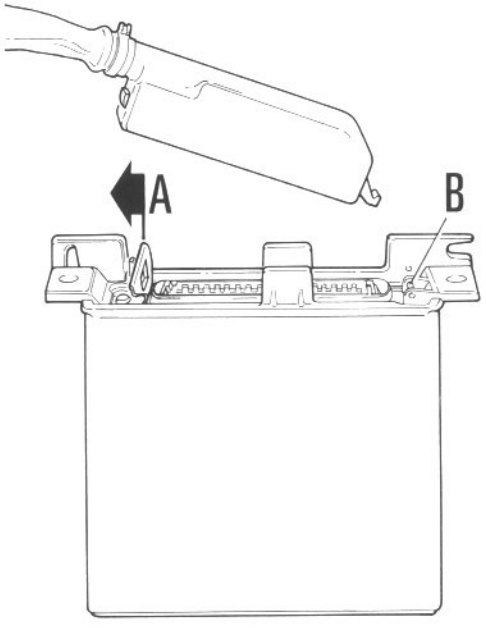

ATTENTION

To gain access to the electronic control unit, whose location is at the right fender skirt under the dashboard cowl, remove the control unit cover panel and the passanger's parcel shelf.

To disconnect the female connector from the eletronic control unit, push the stop toward the direction of arrow **A**, withdraw the connector upward and release it from area **B**.

To link the connectors, engage them at area **B** and apply pressure at **A** paying attention not to demage the pins.

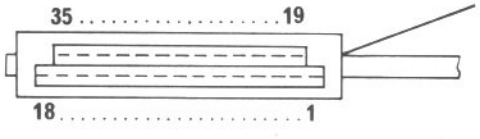

Top view plug.
Cable 1 is identified by an insulating sleeve.
Cable from control unit to ignition coil without connector plug.

Document owned by La Belle Auto, XH-2006
© Alfa Romeo

E TROUBLESHOOTING PROCEDURE

The troubleshooting program is arranged in two columns: the left column contains the symptom of troubles; the right column states the test steps to be performed.

If the questions in the left column can be conclusively answered in the affirmative way without testing, proceed to the next symptom in the same column. On the other hand, should the stated trouble be suspected, the directions in the right column must be followed until the trouble is found.

When the sequence of directions in the right column is completed, troubleshooting is continued in the symptom column.

STARTER RUNS; ENGINE DOES NOT START OR STARTS ONLY WITH DIFFICULTY

Electrical connections O.K.?

No → Check electrical connections. Safety switch in luggage compartment must be closed.

Yes ↓

Ignition O.K.?

No → Check battery voltage, ignition distributor, spark plugs, ignition coil, ignition point etc.

Yes ↓

Connect analogue tester between control unit and Jetronic wiring harness. Test vehicle according to test chart.

No → If following electrical test, engine still does not start or only starts with difficulty, look for mechanical trouble:
Compression, basic valve setting and engine oil pressure.

Yes ↓

All hoses and line connections properly attached? (Visual inspection)

No → Check whether hoses of air-intake system and of fuel line system are correctly attached, not kinked or damaged. Eliminate defects.

Yes ↓

Is fuel pump operating (listen)?

No →
1. Disconnected pump plug.
   Start engine and check voltage and plug.
   If voltage = replace fuel pump.
   Disconnected pump plug.
2. Disconnected pump plug
   Start engine and check voltage at plug.
   No voltage!
   Check voltage at pump fuse no. 4 and relay set term 88 y and term. 88 d.
   No voltage? = replace pump fuse and/or relay set.
   Voltage present after fuse, pump does not operate - check safety switch and replace if necessary.

Yes ↓

Fuel pressure O.K.?
Test value 2.3-2.7 bar

No →

Test value not reached:

1. Pinch off return line:
   Pressure rises above 4 bar = replace pressure regulator
   Pressure remains below 4 bar = replace fuel pump.
2. Check fuel line and filter for throughflow.
3. Strainer in tank blocked.
4. Corrosion in tank.

Test value exceeded:

1. Fuel return line blocked or constricted.
2. Replace pressure regulator.

Yes ↓

Start valve O.K.?

No → Check voltage supply to start valve. For this purpose, disconnect plug from start valve. Connect test lamp to term. 45 and term. 46 of start valve.
Start engine.
Test lamp must light up if coolant temperature below +30°C. Test lamp does not light up above +40°C. If not correct: check leads 45, 46 and 47 for continuity using test lamp. If O.K., see thermo-time switch.

Yes ↓

Yes ↓

STARTER RUNS, ENGINE DOES NOT START OR STARTS ONLY WITH DIFFICULTY (continuation)

Yes

Perform electric check on start valve: resistance approx. 4 Ω.

Yes

Perform mechanical check on start valve:
Remove valve from intake manifold and hold in container
Disconnect lead 1 from ignition coil. Caution: fire hazard! During starting and at a temperature of below +30°C, valve must discharge spray (max. 20 s)
At above +40°C, valve must not discharge spray. valve must likewise not discharge spray with ignition switched on and pressure built up.
Conduct spray-discharge test above +40°C as follows:
Disconnect plug from thermo-time switch and connect terminal "W" to ground.

Yes

Thermo-time switch O.K.?

No

Check thermo-time switch. Disconnect plug and measure resistance directly at thermo-time switch.

1. Between terminal "G" and ground:
   below +30°C = 25-40 Ω
   above +40°C = 50-80 Ω
2. Between terminal "W" and ground:
   below +30°C = 0 Ω
   above +40°C = 100-160 Ω
3. Between term. "G" and term. "W":
   below +30°C = 25-40 Ω
   above +40°C = 50-80 Ω

If not correct: replace thermo-time switch.

Yes

Check leads from start valve term. 45, 46 and 47 for continuity (see "Wiring diagram L-Jetronic injection system").

Yes

Auxiliary air device machanically O.K.?

No

Visual inspection of auxiliary-air device (hoses disconnected):
When cold, device must be open. When engine is warm, it must be closed. If not, replace auxiliary-air device.

Yes

Air-flow sensor O.K.?

No

Remove air-flow sensor

1. Open air-flow sensor flap manually. It must be possible to open air- flow sensor flap with uniform ease as far as stop and flap must then close automatically as far as stop. Air-flow sensor flap must not catch during opening. Pay attention to chafe marks. Clean air-flow sensors which are severally soiled inside or replace.
2. Connect analogue tester and set test step 2.2 (pag. 47). Test value: when air-flow sensor flap is deflected, voltage must continuously drop from 7...8 V to approx. 1 V. If incorrect, remove air-flow sensor.

Yes

Temperature sensor II

No

Measure resistance directly at sensor using ohmmeter:
at −10°C = 7 ... 12 k Ω
+20°C = 2 ... 3 k Ω
+80°C = 250 ... 400 Ω

Yes

Intake system free of leaks?

No

Check intake manifold, bolted-on assemblies and all hose connections for leaks. Locate leaks using compressed air and soapy water.

Document owned by La Belle Auto, XH-2006
© Alfa Romeo

ENGINE STARTS AND THEN CUTS OUT AGAIN

Ignition O.K.?

- No → Ensure proper condition of battery voltage, ignition point, spark plugs, ignition coil, ignition distributor etc.
- Yes ↓

Testing with analogue tester. Connect analogue tester between control unit and Jetronic wiring harness. Test vehicle according to test chart, Test O.K.?

- No → Look for mechanical trouble: Check compression, basic valve setting and engine oil pressure. Correct if necessary.
- Yes ↓

All hoses and line connections properly attached? (visual inspection).

- No → Check whether hoses of air-intake system and of fuel line system are correctly attached, not kinked or damaged. Eliminate defects.
- Yes ↓

Does fuel pump operate (listen)?

- No →
  1. Disconnected pump plug.
     Start engine and check voltage and plug
     If voltage = replace fuel pump.
     Disconnected pump plug.
  2. Disconnected pump plug
     Start engine and check voltage at plug
     No voltage!
     Check voltage at pump fuse no. 4 and relay set term. 88 y and term. 88 d.
     No voltage? = replace pump fuse and/or relay set.
     Voltage present after fuse, pump does not operate - check safety switch and replace if necessary.
- Yes ↓

Fuel pressure O.K.? Test value 2.3-2.7 bar

- No →
  Test value not reached:
  1. Pinch off return line:
     Pressure rises above 4 bar = replace pressure regulator
     Pressure remains below 4 bar = replace fuel pump.
  2. Check fuel line and filter for throughflow.
  3. Screen in tank blocked
  4. Corresion in tank

  Test value exceeded:
  1. Fuel return line blocked or constricted
  2. Replace pressure regulator.
- Yes ↓

Fuel pressure remains constant after starting?

- No → Check fuel pump contact in air-flow sensor: Remove air-flow sensor. Discinnect plug from air-flow sensor and connect ohmmeter to term. 36 and term. 39 of air-flow sensor. Slightly open air-flow sensor flap manually. Reading must change from ∞ Ω to 0 Ω
- Yes ↓

Start valve O.K.? (Leaks)

- No → Check start valve for leaks. For this purpose, pinch off fuel line using a hose clamper. Engine will not start. Replace start valve.
- Yes ↓

Intake system free of leaks?

- No → Check intake manifold, bolted- assemblies and all hose connections for leaks. Locate leaks using compressed air and soapy water.

Document owned by La Belle Auto, XH-2006
© Alfa Romeo

ERRATIC IDLING, ENGINE SPEED ADJUSTMENT (AT IDLE) AND EMISSION TEST

Note: All work on idling must be carried out with the engine at operating temperature, with transmission in neutral and the air conditioner switched off.

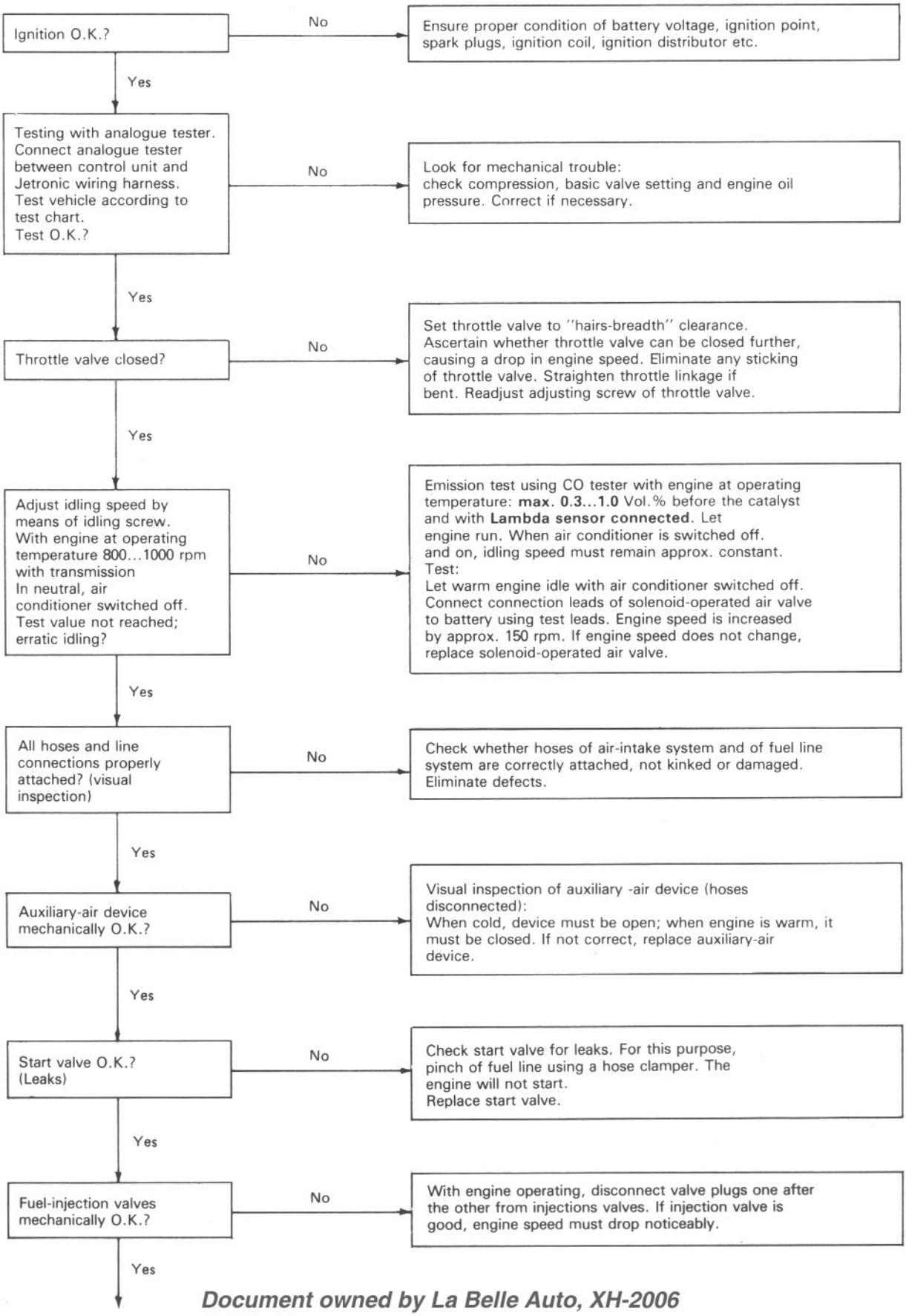

Document owned by La Belle Auto, XH-2006
© Alfa Romeo

ERRATING IDLING, ENGINE SPEED ADJUSTMENT (AT IDLE) AND EMISSION TEST (continuation)

Yes

Vacuum limiter O.K.?

No →

Pinch off connecting hose before or after vacuum limiter.
Change in speed?
If yes: replace vacuum limiter

If no:
Disconnect connecting hose before throttle valve and seal of connection on throttle valve. Rev up briefly. Speed approx. 3500 RPM. Stop revving and check with finger on vacuum hose whether air is being taken in. No air-replace vacuum limiter.

Yes

Fuel pressure O.K.?
Test value 2.3-2.7 bar.

No →

Test value not reached:

1. Pinch off return line:
   Pressure rises above 4 bar = replace pressure regulator
   Pressure remains below 4 bar = replace fuel pump
2. Check fuel line and filter for throughflow.
3. Tank strainer blocked.
4. Corrosion in tank.

Test value exceeded:

1. Fuel return line blocked or constricted.
2. Replace pressure regulator.

Yes

Temperature sensor II O.K.?

No →

Measure resistance directly at sensor using ohmmeter:
at −10°C = 7 ... 12 k Ω
+20°C = 2 ... 3 k Ω
+80°C = 250 ... 400 Ω

Yes

Air-flow sensor O.K.?

No →

Remove air-flow sensor

1. Open air-flow sensor flap manually. It must be possible to open air-flow sensor flap with uniform ease as far as stop and flap must then close automatically as far as stop. Air-flow sensor flap must not catch during opening. Pay attention to chafe marks. Clean air-flow sensor which are severely soiled inside or replace.
2. Connect analogue tester and set test stop 2.2 (pag. 47) Test value: when air flow sensor flap is deflected, voltage must continuously drop from 7...8 V to approx. 1 V. If not correct replace air-flow sensor.

Yes

Emission test (repeat) using CO tester with engine at operating temperature max. 0.3...1.0% by volume O.K.?

No →

If CO concentration too high, turn bypass screw in air-flow sensor 1/2 revolution counterclockwise. Recheck engine speed and CO concentration. Make correction in several Lambda steps. Use new plug (see C7)
Check closed-loop control.

Yes

Intake system free of leaks?

No →

Check intake manifold, bolted-on assemblies and all hose connections for leaks. Locate leaks using compressed air and soapy water.

Document owned by La Belle Auto, XH-2006
© Alfa Romeo

POOR THROTTLE TAKE–UP

Ignition O.K.?

- No → Ensure proper condition of battery voltage, ignition point, spark plugs, ignition coil, ignition distributor etc.
- Yes ↓

Testing with analogue tester. Connect analogue tester between control unit and Jetronic wiring harness. Test vehicle according to test chart. Test O.K.?

- No → Look for mechanical trouble: Check compression, basic valve setting and engine oil pressure. Correct if necessary.
- Yes ↓

All hoses and line connections properly attached (visual inspection).

- No → Check whether hoses of air-intake system and of fuel line system are correctly attached, not kinked or damaged. Eliminate defects.
- Yes ↓

Auxiliary-air device mechanically O.K.?

- No → Visual inspection of auxiliary-air device? When cold, device must be open. When engine is warm, it must be closed. If not, replace auxliary-air device.
- Yes ↓

Air-flow sensor O.K.?

- No → Remove air-flow sensor
  1. Open air-flow sensor flap manually. It must be possible to open air-flow sensor flap with uniform ease as far as stop and flap must then close automatically as far as stop. Air-flow sensor flap must not catch during opening. Pay attention to chafe marks. Clean air-flow sensors which are severely soiled inside or replace.
  2. Connect analogue tester and set test step 2.2 (pag. 47). Test value: when air-flow sensor flap is deflected, voltage must continuously drop from 7...8 V to approx. 1 V. If not correct, replace air-flow sensor.
- Yes ↓

Temperature sensor II O.K.?

- No → Measure resistance directly at sensor using ohmmeter:
  at −10°C = 7 ... 12 k Ω
  +20°C = 2 ... 3 k Ω
  +80°C = 250 ... 400 Ω
- Yes ↓

Intake system free of leaks?

- No → Check intake manifold, bolted-on assemblies and all hose connections for leaks. Locate leaks using compressed sir and soapy water.

Document owned by La Belle Auto, XH-2006
© Alfa Romeo

COMBUSTION MISSES IN ALL DRIVING CONDITIONS

Ignition O.K.?
- No → Ensure proper condition of battery voltage, ignition point, spark plugs, ignition coil, ignition distributor, loose contacts on safety switch etc.
- Yes ↓

Testing with analogue tester. Connect analogue tester between control unit and Jetronic wiring harness. Test vehicle according to test chart. Test O.K.?
- No → Look for mechanical trouble: Check compression, basic valve setting and engine oil pressure. Correct if necessary.
- Yes ↓

Plug-in connections of Jetronic wiring harness O.K.?
- No → Check plug-in connections for proper attachment and corrosion. Check grounds leaks 5, 16, 17, 35 and 49 for continuity and loose contacts.
- Yes ↓

Voltage supply to fuel-injection system O.K.?
- No → Disconnect both wiring harness plugs from relay set. Check whether all receptacles and leads are O.K. Check all connection leads for continuity while moving wiring harness. Suspected lead breaks. See also preçeding test step with analogue tester.
- Yes ↓

Start valve O.K.? (Leaks)
- No → Pinch off fuel pressure hose before connection to start valve using a hose clamper. If missing ceases, replace start valve.
- Yes ↓

Aternator with regulator O.K.? (Combustion misses due to voltage peaks)
- No → Disconnect plug from alternator with engine switched off. Start engine. If missing cases, check alternator and regulator.
- Yes ↓

Fuel quantity O.K.?
- No → Measure fuel quantity: Disconnect fuel feed line at fuel ring main. (Junction at front). Attach extension hose and place open end in a 5 litres container with measuring scale. Disconnect air hose on air-flow sensor. Open air-flow sensor flap manually until pump operates. Measured value (after 1 minute of operation) 1.5...2.0 l/min.
- Yes ↓

Burbling during overrun? No burbling, O.K.?
- No → If a decel valve is fitted: Pinch off connecting hose before or after vacuum limiter. Change is speed? If yes - replace vacuum limiter.
- Yes ↓

Air-flow sensor O.K.?
- No → Remove air-flow sensor
  1. Open air-flow sensor flap manually. It must be possible to open air-flow sensor flap with uniform ease as far as stop and flap must then close automatically as far as stop. Air-flow sensor flap must not catch during opening. Pay attention to chafe marks. Clean air-flow sensors which are severely soiled inside or replace.
  2. Connect analogue tester and set test step 2.2 (pag. 47). Test value: when air-flow sensor flap is deflected, voltage must continuously drop from 7...8 V to approx. 1 V. If not, replace air-flow sensor.
- Yes ↓

Control unit O.K.?
- No → Connect analogue tester. Let engine run. Tap control unit lightly and move multiple plug. Look for combustion misses. Repair plug-in connection on multiple plug or replace defective control unit.

Document owned by La Belle Auto, XH-2006
© Alfa Romeo

EXCESSIVE FUEL CONSUMPTION — Town traffic?

Note: Are all brakes free?

Ignition O.K.?

- No → Ensure proper condition of battery voltage, ignition point, spark plugs, ignition coil, ignition distributor etc.
- Yes ↓

Testing with analogue tester. Connect analogue tester between control unit and Jetronic wiring harness. Test vehicle according to test chart. Test O.K.?

- No → Look for mechanical trouble: Check compression, basic valve setting and engine oil pressure. Correct if necessary.
- Yes ↓

Fuel pressure O.K.? Test value 2.3-2.7 bar.

- No → Test value not reached:
  1. Pinch of return line:
     Pressure rises above 4 bar = replace pressure regulator
     Pressure remains below 4 bar = replace fuel pump
  2. Check fuel lines and filter for throughflow.
  3. Tank strainer blocked.
  4. Corrosion in tank.

  Test value exceeded
  1. Fuel return line blocked or constricted
  2. Replace pressure regulator.
- Yes ↓

Fuel injection valves mechanically O.K.?

- No → With engine running, disconnect valve plugs one after the other from injection valves. If injection valves is good, engine speed must drop noticeably.
- Yes ↓

Start valve O.K.? (Leaks)

- No → Pinch of fuel pressure hose before connection to start valve using hose clamper. If missing ceases, replace start valve.
- Yes ↓

Air-flow sensor O.K.?

- No → Remove air-flow sensor
  1. Open air-flow sensor flap manually. It must be possible to open air-flow sensor flap with uniform ease as far as stop and flap must then close automatically as far as stop. Air-flow sensor flap must not catch during opening. Pay attention to chafe marks. Clean air-flow sensors which are severely soiled inside or replace.
  2. Connect analogue tester and set test step 2.2. (pag. 47). Test value: when air-flow sensor flap is deflected, voltage must continuously drop from 7...8 V to approx. 1 V. If not, replace air-flow sensor.
- Yes ↓

Emission test using CO tester with engine at operating temperature max. 0.3...1.0 by volume O.K.?

- No → If CO concentration too high, turn bypass screw in air-flow sensor 1/2 revolution counterclockwise. Recheck engine speed and CO concentration. Make corrections in several steps. Use new plug (see C7). Check Lambda closed-loop control.

Document owned by La Belle Auto, XH-2006
© Alfa Romeo

NO PEAK OUTPUT. MAXIMUM SPEED NOT REACHED

Ignition O.K.?
- No → Ensure proper condition of battery voltage, ignition point, spark plugs, ignition coil, ignition distributor etc.
- Yes ↓

Testing with analogue tester. Connect analogue tester between control unit and Jetronic wiring harness test vehicle according to test chart. Test O.K.?
- No → Look for mechanical trouble: Check compression, basic valve setting and engine oil pressure. Correct if necessary.
- Yes ↓

Does throttle valve open fully?
- No → Throttle linkage, accelerator pedal O.K.? If necessary, straighten linkage, floor mat catching etc.
- Yes ↓

Full-load switch O.K.?
- No → Accelerator pedal in rest position: Resistance between term. 3 and term. 18 on full-load switch ∞ Ω.

  Accelerator pedal fully depressed: Resistance between term. 3 and term. 18 on full-load switch 0 Ω. O.K? If not - replace full-load switch.
- Yes ↓

Fuel pressure O.K.? Test value 2.3-2.7 bar on chassis dinamometer at maximum power. Check pressure O.K.?
- No → Test value not reached:
  1. Pinch off return line:
     Pressure rises above 4 bar = replace pressure regulator
     Pressure remains below 4 bar = replace fuel pump
  2. Check fuel line and filter for throughflow.
  3. Tank strainer blocked.
  4. Corrosion in tank

  Test value exceeded:
  1. Fuel return line blocked or constricted
  2. Replace pressure regulator.
- Yes ↓

All hoses and line connections correctly attached? (Visual inspection)
- No → Check whether hoses of air-intake system and of fuel line system are corectly attached, not kinked or damaged. Eliminate defectes.
- Yes ↓

Fuel quantity O.K.?
- No → Measure fuel quantity: Disconnect fuel feed line at fuel ring main (junction at front). If necessary, attach extension hose and place open end in a 5 l container with measuring scale. Remove air hose from air-flow sensor. Open air-flow sensor flap manually until pump operates. Measured value (after 1 minute of operation): 1.5...2.0 l/min.
- Yes ↓

Air-flow sensor O.K.?
- No → Remove air-flow sensor
  1. Open air-flow sensor flap manually. It must be possible to open air-flow sensor flap with uniform ease as far as stop and flap must then close automatically as far as stop. Air-flow sensor flap must not catch during opening. Pay attention to chafe marks. Clean air-flow sensors which are severely soiled inside or replace.
  2. Connect analogue tester and set test step 2.2 (pag. 47). Test value: when air-flow sensor flap is deflected, voltage must continuously drop from 7...8 V to approx. 1 V. If not, replace air-flow sensor.
- Yes ↓

Intake system free Of leaks?
- No → Check intake manifold, bolted-on assemblies and all hose connections for leaks. Locate leaks using compressed air and soapy water.

Document owned by La Belle Auto, XH-2006
© Alfa Romeo

F TESTING THE BOSCH ELECTRONIC INJECTION SYSTEM

PROCEDURE WITH BOSCH TESTER (0.684.100.202)

- Remove the shelf from under the instrument panel at right-hand side.
- Loosen the control unit securing screws and remove the control unit from the side panel.
- Connect the female connector of the Bosch tester to the control unit and the male connector to the car's wiring harness.
- Turn the cylinder selector switch to "6".
- Switch on the ignition; the red lamp on tester will come on.

NOTE: The red indicator lamp must stay lit throughout test procedure. The lamp goes off a trouble exists with voltage supply.

- The green lamp monitors the triggering of injection pulses (terminal 1).
  When starting motor is actuated this lamp stays on constantly.

Document owned by La Belle Auto, XH-2006
© Alfa Romeo

Tester with analogue display

1 – Indicator lamp "red"
2 – Cylinder selector switch
3 – Mechanical zero adjustment
4 – Adjustment knob
5 – Rotary switch "program"
6 – Indicator lamp "green"
7 – Program button
8 – Connection to wiring harness
9 – Connection to control unit

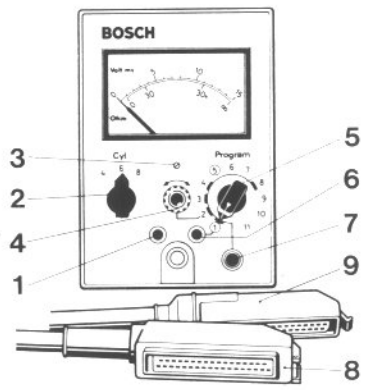

TEST CHART

- Disconnect the connector of jetronic wire bundle of cars harness from the control unit and connect the tester across control unit and wire bundle. Great attention should be paid in disconnecting and connecting the connector's halves (see page 36).
- Ignition "on" for all test steps.
- Turn switch "cylinder" to position "6".

TEST STEP	OPERATION				INDICATION			TEST		TROUBLESHOOTING	
	Program switch position	Press program button	Actuate adjustment knob	Trigger function on vehicle	Instrument V, Ω, ms	Lamp red	Lamp green	Assemblies	Function	Malfunction	Checks and remedies
1.1	1				0. V			Gauging instrument in tester.	Tester mechanical zero-setting.	Pointer not indicating-zero.	Adjust the zero setting of tester's gauging instrument.
1.2	1				0. V	Lit	Lit	Relay set (main relay)	Voltage supply	Red lamp not lit up	Check lead from relay set term. 85 to multiple plug term. 28, from control unit term. 28 to control unit term. 16 as well as multiple plug term. 16 to ground terminal for a break using ohmmeter (nominal value 0Ω). With ignition switched on, test voltage at relay set terms. 88 c, 88 z, 88 a, 88 e, 88 b, 88 f to multiple plug term. 10. Eliminate any lead breaks or contact resistances or replace relay set.
1.3	1			Disengage gear; actuate starting motor	8 ..... 15 V	Lit	Flickers	Starting motor term. 50 and relay set	Instrument: Voltage at control unit term. 4	No voltage indication	Voltage indication less than 8 V; battery insufficiently charged or large voltage drops. No voltage indication: test voltage when starting at relay set term. 86 a - relay set term. 86 - multiple plug term. 4. Look for break or replace relay set.
1.4	1			Disengage gear; actuate starting motor	8 ..... 15 V	Lit	Flickers	Lead from control unit term. 1 to ignition coil term. 1	Green lamp: Control unit triggering of ignition coil term. 1.	Green lamp does not flicker	Test lead 1 from ignition coil term. 1 to multiple plug term. 1 for a break.
1.5	1	Press			0. V	Lit	Lit	Relay set (pump relay), pump contact in air-flow sensor	Control unit term. 20 no voltage	Voltage indication	Disconnect air-flow sensor plug. Repeat test. Voltage indication: replace relay set, voltage indication 0 V: replace air-flow sensor (pump contact does not open).
1.6	1	Press		Disengage gear; actuate starting motor	8 ..... 15 V	Lit	Flickers	Relay set (pump relay)	Voltage at control unit term. 20	No voltage indication	Slightly open by hand the air-flow sensor floating flap then repeat the test step, if malfunction persists, remove the plug from air-flow sensor and open slightly the floating flap; the ohmmeter connected across term. 36 and term. 39, should indicate 0Ω. If reading is correct, check for continuity the leads from relay set terms. 36 and 39 to the relevant terminals of air-flow sensor as well as from relay set term. 20 to the relevant one of multiple set.
1.7	1	Press		Disengage gear; actuate starting motor	8 ..... 15 V	Lit	Flickers	Lead from control unit term. 1 to ignition coil term. 1	Green lamp: Control unit triggering of ignition coil term. 1	Green lamp does not flicker	Check for continuity the lead from coil's trem. 1 to intermediate fitting then to term. 1 of control unit's multiple plug.

Document owned by La Belle Auto, XH-2006
© Alfa Romeo

TEST STEP	OPERATION				INDICATION			TEST		TROUBLESHOOTING	
	Program switch position	Press program button	Actuate adjustment knob	Trigger function on vehicle	Instrument V Ω ms	Lamp red	Lamp green	Assemblies	Function	Malfunction	Checks and remedies
2.1	2		Set pointer to 15 V		15 V	Lit	Lit	Tester	Adjustment of indicating instrument to battery voltage.	Adjustment not possible	Tester defective.
2.2	2	Press			7.....8 V	Lit	Lit	Air-flow sensor	Potentiometer in air-flow sensor (air-flow sensor flap in off-position)	No indication or indication deviates from nominal value.	Check leads from air-flow sensor to multiple plug for break using ohmmeter: terminals 6, 7, 8 and 9 on both assemblies. Voltage drops at plug-in contacts. Replace or clean air-flow sensor and check air-flow sensor flap for freedom of movement.
3.1	3				70.....500 Ω	Lit	Lit	Relay set (pump relay) and ground connection	Resistance from control unit term. 20 to ground via pump relay coil	Resistance outside tolerance	Resistance between relay set term. 96 b and term. 85 = 70-500 Ω Replace relay set if necessary. Check following leads for breaks using ohmmeter: Multiple plug term. 20 to relay set term. 86 b, relay set term. 85 to multiple plug term. 28, multiple plug term. 16 to ground terminal.
3.2	3	Press			25.....60 Ω	Lit	Lit	Auxiliary-air device and fuel pump	Joint resistance of auxiliary-air device and fuel pump from control unit term. 34 to ground.	Resistance outside tolerance	Resistance between auxiliary-air device term. 34 and term. 48 approx. 35 Ω Resistance between relay set term. 88 d and ground: approx. 1 Ω In case of break, check ground lead and positive lead to pump. Check following connections for breaks using ohmmeter: Multiple plug term. 34 to auxiliary-air device term. 34, auxiliary-air device term. 48 to relay set term. 88 c, relay set term. 88 d (in case of break replace relay set). Test plug-in connection.

Document owned by La Belle Auto, XH-2006
© Alfa Romeo

TEST STEP	OPERATION				INDICATION			TEST		TROUBLESHOOTING	
	Program switch position	Press program button	Actuate adjustment knob	Trigger function on vehicle	Instrument V, Ω, ms	Lamp red	Lamp green	Assemblies	Function	Malfunction	Checks and remedies
4.1	4				30Ω..30 k Ω (temperature dependent)	Lit	Lit	Temperature sensor II (engine)	Resistance from control unit term. 13 to central ground via temperature sensor II	Resistance outside tolerance	Measure resistance value directly at temperature sensor II (term. 13 and term. 49): at −10°C: 7..... 12 k Ω +20°C: 2..... 3 k Ω +80°C: 250.....400 Ω Temperature sensor II. Check following leads for breaks using ohmmeter: multiple plug term. 13 to temperature sensor II term. 13; temperature sensor II term. 49 to ground terminal. Test plug-in connections.
4.2	4	Press			30Ω...30k Ω (temperature dependent)	Lit	Lit	Temperature sensor I (air) in air-flow sensor	Resistance from control unit term. 27 to central ground	Resistance outside tolerance	Measure resistance value directly at air-flow sensor term. 27 and term. 6: at −10°C: 7..... 12 k Ω +20°C: 2..... 3 k Ω +80°C: 250.....400 Ω Temperature sensor I. Check following leads for breaks using ohmmeter: multiple plug term. 27 to air-flow sensor term. 27; air-flow sensor term. 6 to multiple plug term. 6.
5.3	5			Fully depress accelerator pedal	0 Ω	Lit	Lit	Full-load switch	Resitance from control unit term. 18 to term. 3 on full-load switch	No 0 Ω indication	Does throttle valve open fully? Check throttle linkage from accelerator pedal to throttle valve. Check plug-in connections. Direct resistance measurement at full-load switch between term. 18 and term. 3 (open throttle valve fully). Replace full-load switch if necessary. Check lead from multiple plug term. 3 to full-load switch term. 3 for a break. Check lead from multiple plug term. 18 to full-load switch term. 18 for a break.

Document owned by La Belle Auto, XH-2006
© Alfa Romeo

TEST STEP	OPERATION				INDICATION			TEST		TROUBLESHOOTING	
	Program switch position	Press program button	Actuate adjustment knob	Trigger function on vehicle	Instrument V, Ω, ms	Lamp red	Lamp green	Assemblies	Function	Malfunction	Checks and remedies
6	6				3.90...5.70 ms	Lit	Lit	Control unit	Starting fuel delivery	No indication or indication outside tolerance	1. Check the ground terminal and test for current supply to leads 5 and 49; check for loose contacts. 2. Check plug-in connections at multiple plug. 3. Faulty control unit.
7	7				1) 3.40...4.80 ms	Lit	Lit		Post-start enrichment and warm-up		
8.1	8				2.80...4.10 ms	Lit	Lit		Basic adjustment I		
8.2	8	Press			2) 4.05...5.70 ms	Lit	Lit		Full-load correction		
9	9				3) 1.35...2.30 ms	Lit	Lit		Basic adjustment II		
10	10				5.60...7.60 ms	Lit	Lit		Basic adjustment III		
11.1	11				3) 4.20...5.85 ms	Lit	Lit		Lambda closed-loop control	Indication outside tolerance	See chapter "Test concept for vehicles with lambda closed-loop control and L-Jetronic"
11.2	11	Probe each injector manually and ascertain needle movement by feeling			3) 4.20...5.85 ms	Lit	Lit	Injector	Needle movement	Needle movement connot be felt	1. Injection times properly set: injectors however fail to work (no needle movement). Check ground terminal and leads 16 and 17. Check lead from term. 29 to relay set term. 88 b; if this operates properly, replace the control unit (faulty final stage). 2. Replace the injector, if needle movement can now be felt the former injector is faulty, winding resistance: 2-3 Ω If no needle movement can be felt, check leads from multiple plug to relay set terms. 88 b, 88 e, 88 f. Check the connections.

Note: When switching over from test steps 6-11 the pointer must be seen to move between the individual test steps.

1) When switching over to test step 7, the hight reading (post start enrichment) is regulated down to the warm-up value. The post-start enrichment can be used only as a functional test: high reading. The test value given here is the warm-up value after max. 30 seconds of regulation time.

2) The test value must rise after the program button has been pressed, i. e. test value of test step 8.2 is greater than test step 8.1.

3) Wait for pointer to settle.

Document owned by La Belle Auto, XH-2006
© Alfa Romeo

G WIRING DIAGRAM: L-JETRONIC INJECTION SYSTEM

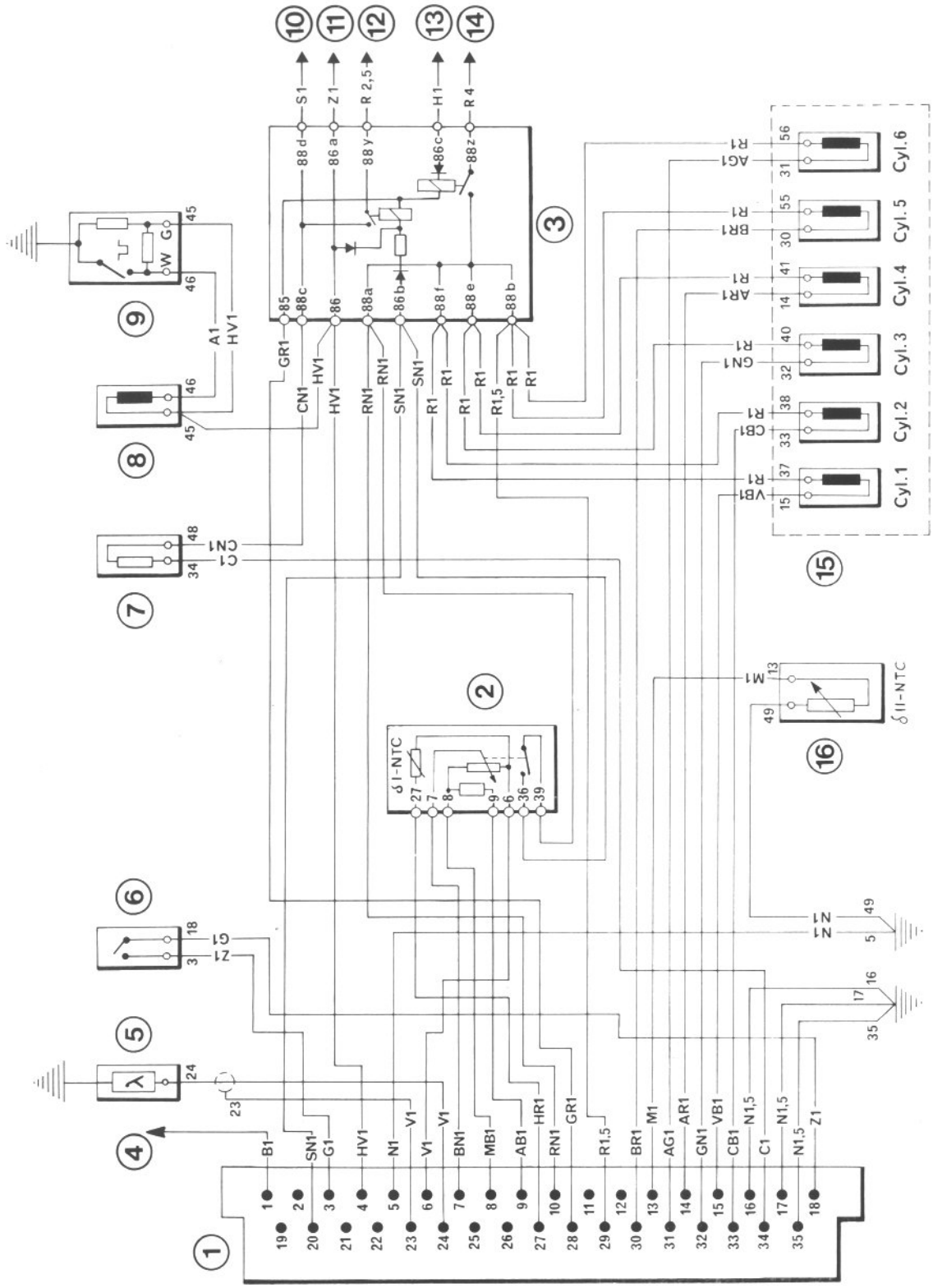

1 - Female connector to electronic control unit
2 - Air-flow sensor
3 - Relay set
4 - To terminal no. 1 of ignition coil
5 - Lambda sensor
6 - Full-load switch
7 - Auxiliary air-device
8 - Cold start valve
9 - Thermo-time switch
10 - To inertia switch
11 - To ignition switch connector
12 - To fuse no. 5 (outlet)
13 - To fuse no. 8 (inlet)
14 - To battery
15 - Injectors
16 - Coolant temperature sensor

Document owned by La Belle Auto, XH-2006
© Alfa Romeo

Cable Color Code

A. blue
B. white
C. orange
G. yellow
H. grey
M. brown
N. black
R. red
S. pink
V. green
Z. purple

Document owned by La Belle Auto, XH-2006
© Alfa Romeo

Alfa Romeo

DIREZIONE ASSISTENZA
Centro Direzionale
20020 - ARESE (Milano)

Pubblic. PA. 300600000000 - 11/82 - (1000)

Printed in Italy
Apollo's Centro Stampa - Milano

All rights reserved. This book, or parts thereof, may not be reproduced in any form without permission of Alfa Romeo Auto S.p.A.