ALFA ROMEO

Alfetta GT

Catalogo parti di ricambio
Catalogue de pièces de rechange
Spare parts catalog
Ersatzteil Katalog
Catalogo de piezas de repuesto

Alfetta GT



	DATI D'IDENTIFICAZIONE	IDENTIFICATION	CAR IDENTIFICATION	LAGE VON TYPSCHILD, MOTOR- UND FAHRGESTELLNUMMER	IDENTIFICACIÓN DEL VEHÍCULO
①	N. AUTOTELAIO	N. de châssis	Chassis no.	Fahrgestellnummer	Chasis n.
②	TIPO DI VETTURA E N. OMOLAZIONE D.G.M.	Type de la voiture et N.ro d'homologation D.G.M.	Car modal & type approval plate	Fahrzeugtype und D.G.M. Nummer	Tipo de vehículo y n. D.G.M.
③	N. MOTORE	N. de moteur	Engine no.	Motornummer	Motor n.
④	TARGHETTA CARATTERISTICHE VERNICIATURA	Plaquette d'identification de la peinture	Finish peint plate	Lackerkennungs-tafel	Placa de identificación de la pintura

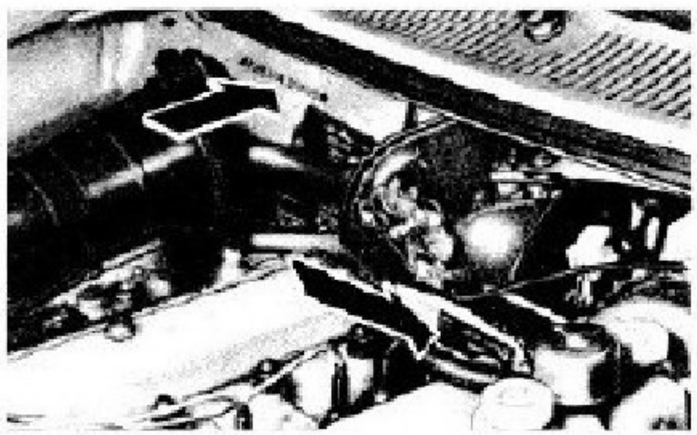

1 2



3



4

INDICE GENERALE	TABLE DES MATERIES	INDEX	INHALTSVERZEICHNIS	INDICE GENERAL	PAG.
DATI PER L'IDENTIFICAZIONE DELLA VETTURA	Identification de la voiture	Car identification	Lage von Typschield, Motor- und Fahrgestellnummer	Datos para la identificación del vehiculo	2
AVVERTENZE	Introduction	Foreword	Vorwort	Advertencias	4
VALIDITA'	Application des equipements selon le pays de destination	Validity	Gultigkeit	Validez	9
NORME DI RICAMBIO	Consignes d'interchangeabilité	Rules for spare parts	Vorschriften für die Ersatzteile	Normas para repuesto	10
GRUPPI MECCANICI (Indice particolareggiato)	Organes mécaniques (Répertoire des planches)	Mechenical units (Contents)	Mechanische Aggregate (Tafelverzeichnis)	Grupos mecanicos (Indice detallado)	11
GRUPPI ELETTRICI (Indice particolareggiato)	Equipement électrique (Répertoire des planches)	Electrical units (Contents)	Elektrische Anlage (Tafelverzeichnis)	Grupos electricos (Indice detallado)	279
CARROZZERIA (Indice particolareggiato)	Carrosserie (Répertoire des planches)	Coachwork (Contents)	Aufbau (Tafelverzeichnis)	Carroceria (Indice detallado)	345
INDICE NUMERICO	Répertoire numérique	Numerical index	Nummerverzeichnis	Indice numerico	465
INDICE DI COMPARAZIONE	Répertoire numéros Alfa Romeo references fournisseurs	Cross reference	Vergleichsindex	Indice de comparación	483

AVVERTENZE GENERALI PER LA CONSULTAZIONE DEL CATALOGO RICAMBI

Tutti i pezzi suscettibili di essere richiesti come parti di ricambio sono individuabili dal numero d'ordinazione, dalla denominazione e dalla quantità riportati nel testo che accompagnano le illustrazioni.

Considerato che le varianti volta a volta introdotte nella fabbricazione portano a cambiare tali numeri, denominazioni e quantità nel tempo, è necessario che i MAGAZZINI PARTI DI RICAMBIO seguano attentamente le varianti comunicate periodicamente mediante i fogli di aggiornamento.

Tutti i pezzi indicati nel presente catalogo sono disponibili presso i magazzini del nostro Servizio Centrale Ricambi. Per i pezzi di fornitura esterna è riportata, a fine catalogo, un'apposita tabella di comparazione comprendente: il numero di ordinazione Alfa Romeo, il nome del fornitore ed il numero categorico, corrispondente.

Tutte le ordinazioni devono essere effettuate indicando oltre al numero del pezzo rilevato nel Catalogo anche il numero di telaio e di motore del veicolo sul quale dovranno essere impiegati i pezzi richiesti. E' opportuno che le ordinazioni siano completate dalla esatta denominazione del pezzo quale riportato negli elenchi di testo.

TAVOLE

Illustrano le parti di ricambio elencate nel testo. Ogni TAVOLA riporta in alto a destra il numero di TAVOLA codificato, la denominazione della TAVOLA (in alto a sinistra) e l'indicazione del modello (in basso a destra). Tutte le parti di ricambio illustrate nelle TAVOLE sono contraddistinte dal numero di ordinazione con a fianco tutte le indicazioni (numero delle modifiche, riferimenti, ecc.) sufficienti per poter individuare il ricambio direttamente sulla tavola.

INDICAZIONI E ABBREVIAZIONI

101100 ——— = di normale fornitura

510654 / 531234 ——— = in alternativo

543765* ——— = parte specifica di una versione, consultare sul retro della TAVOLA la validità

F2341 543765 —— = parte premodifica 2341 (viene ancora fornito di ricambio)

F3421 563491 —— = parte premodifica 3421 (non viene più fornita di ricambio)

D2321 532465 —— = parte postmodifica 2321

Per una più corretta ordinazione dei pezzi di ricambio è inoltre necessario consultare la tavola NORME DI RICAMBIO.

532421 mm30 ——— = particolare con indicazione della lunghezza di 30 mm

153432+0,2 ——— = particolare con indicazione della maggiorazione di 0,2 mm

101234–0,2 ——— = particolare con indicazione della minorazione di 0,2 mm

101440sp. 1,25 —— = particolare con indicazione dello spessore di 1,25 mm

107653gr. 50 ——— = particolare con indicazione del peso di 50 gr.

543873 s ——— = particolare sinistro (*)

543874 d ——— = particolare destro (*)

518765 Ø 6,5 ——— = particolare avente diametro di 6,5 mm

543217 gs ——— = particolare per veicolo con guida sinistra

564786 gd ——— = particolare per veicolo con guida destra

518765 TAV. 69.30 — = particolare illustrato nella TAVOLA 69.30

VALIDITA' DELLA TAVOLA (in fondo a sinistra)

FINO veic. 5008654 — (oppure mot.) la TAVOLA vale fino al veicolo con numero di telaio (o motore) 5008654)

DAL veic. 5008655 — (oppure mot.) la TAVOLA vale dal veicolo con numero di telaio (o motore) 5008655

TESTO PARTI DI RICAMBIO

Ripete il numero di ordinazione della parte di ricambio, con la quantità e la denominazione in cinque lingue.
Le eventuali indicazioni ed abbreviazioni sono riportate solo nella colonna relativa al testo italiano.

INDICAZIONI E ABBREVIAZIONI

GR.	=	gruppo
SR.	=	serie
COMPL.	=	completo - complessivo
SP.	=	spessore
S.	=	parte sinistra (*)
D.	=	parte destra (*)
ANT.	=	parte anteriore
POST.	=	parte posteriore
SUP.	=	parte superiore
INF.	=	parte inferiore
EST.	=	parte esterna
INT.	=	parte interna
LAT.	=	parte laterale
CENTR.	=	parte centrale
RM	=	retromarcia
1A, 2A . . .	=	1ª, 2ª . . . velocità
N.	=	numero
GS	=	guida sinistra
GD	=	guida destra
ASP.	=	particolare per aspirazione
SCAR.	=	particolare per scarico

NELLA COLONNA QUANTITA'

0 = fornito a metri oppure fornito a richiesta

(*) Rispetto alla direzione di marcia del veicolo

UTILISATION DU CATALOGUE DE PIECES DE RECHANGE

Toutes les pièces vendables en rechange sont contenues dans le présent document où elles sont réparties par planche précisant leur numéro de commande, leur désignation et le quantié entrent dans chaque organe ou élément.

Les modifications pouvant survenir en fabrication entraînent, chaque fois, la modification de ses numéros, désignation et quantité, aussi nous recommandons à tous les MAGASINS DE PIECES DE RECHANGE de suivre très attentivement les mises à jour que nous diffusons au fur et à mesure de ces modifications.

Toutes les pièces indiquées dans le présent Catalogue sont en vente à notre Magasin Central Pièces de Rechange. Pour les pièces de fourniture extérieure un répertoire, à la fin du Catalogue, indique les numéros de commande Alfa Romeo et les références fournisseurs correspondantes.

Sur toutes les commandes mentionner, outre le numéro de pièce relevé dans le Catalogue, le numéro de chassis et de moteur du véhicule auquel sont destinées les pièces demandées. Il est souhaitable d'indiquer également l'exacte désignation, donnée dans le texte, de la pièce intéressée.

PLANCHES

Les planches se composent d'une illustration et d'un texte. Chaque planche est identifiée par un numéro codifié (en haut, à droite), la désignation technologique (en haut, à gauche) et l'indication du modèle de voiture (en bas, à droite).

A côté de l'illustration de chaque pièce figure le numéro de commande de celle-ci ainsi que des renseignements supplémentaires (consignes, points de départ, etc.) permettant un repérage rapide de la pièce desirée.

Au dos de la planche illustrée figure le texte qui répète, pour chaque pièce, le numéro de commande, la quantité et sa désignation en cinq langues.

ABREVIATIONS ET EXPRESSIONS CODIFIEES UTILISEES DANS LES PLANCHES

101100 ——— = pièce de vente courante

510654
531234 ——— = pièces vendues concurremment

543765* ——— = équipements spéciaux (voir au verso de la planche l'application suivant les pays de destination)

F2241 543765 ——— = pièce ancien montage 2341 (est encore vendus en rechange)

F3421 567431 ——— = pièce ancien montage 3421 (n'est plus vendue en rechange)

D2321 532465 ——— = pièce nouveau montage 2321

Lors de toute commande de pièce il est nécessaire de consulter également la planche "Consignes d'interchangeabilité".

632421 mm 30 ——— = pièce ayant une longueur de 30 mm

153432 + 0,2 ——— = pièce cote majorée de 0,2 mm

101234 – 0,2 ——— = pièce cote minorée de 0,2 mm

101440sp. 1,25 ——— = pièce ayant une épaisseur de 1,25 mm

107953gr. 50 ——— = pièce ayant un poids de 50 gr

543873 s ——— = pièce gauche (*)

543874 d ——— = pièce droite (*)

518765 Ø 6.5 ——— = pièce ayant un diamètre de 6,5 mm

543217 gs ——— = pièce pour voitures direction à gauche

564786 gd ——— = pièce pour voitures direction à droite

518756 TAV. 69.30 – = pièce illustrée à la planche 69.30

POINTS DE DEPART (au bas de la planche, à gauche)

FINO veic. 5008654	application jusqu'à la voiture numéro de châssis ou de moteur 5008654
DAL veic. 5008655	application depuis la voiture numéro de châssis ou de moteur 5008655

ABREVIATIONS ET EXPRESSIONS CODIFIEES UTILISEES DANS LE SEUL TEXTE ITALIEN (au dos de la planche illustrée)

GR.	= collection
SR.	= jeu de pièces
COMPL.	= complet - unit
SP.	= épaisseur
S.	= gauche (*)
D.	= droite (*)
ANT.	= avant
POST.	= arrière
SUP.	= supérieur/e
INF.	= intérieur/e
EST.	= extérieur/e
INT.	= intérieur/e
LAT.	= latéral/e
CENTR.	= central/e
RM	= marche arrière
1A, 2A . . .	= 1ère, 2e . . . vitesse
GS	= direction à gauche
GD	= direction à droite
N.	= numéro
ASP.	= admission
SCAR.	= échappement

COLONNE QUANTITE

0	= vente au mètre ou quantité selon besoin

(*) gauche ou droite du conducteur

HOW TO CONSULT SPARE PARTS CATALOG

All the component parts liable to be ordered as spares are identified in the breakdown list which accompanies view tables.

Since the modifications now and then introduced in series production lead to changes in the number, description and quantity, it is essential for THE SPARE PARTS STORES to strictly follow the changes which will be regularly notified with the amendment sheets.

All the items entered in this catalog are available at the head store of our Spare Parts Department. For parts manufactured outside the factory an A.R. part. no. to supplier's name & part no. cross-reference list is given on last pages of the catalog.

All the orders for parts should state the catalog number and, in addition, the chassis and engine numbers of the concerned cars. When ordering, it is advisable to describe the part with the same description as given in the breakdown lists.

TABLES

They illustrate spare parts listed in each breakdown table. The codified TABLE number is quoted on the top right side, TABLE denomination on the top left side and the model indication on the bottom right side. All spare parts illustrated in TABLES are identified by Numbers. All necessary indications (modification number, references, etc) to identify spare parts on breakdown tables are specified as well.

INDICATIONS AND ABRIDGEMENTS

101100 ——— = part normally supplied

510654
531234 ——— = parts supplied alternatively

543765* ——— = part suitable for a particular model; check validity on the table back

F 2341 543765 ——— = part, pre-mod. 2341 (still supplied as spare part)

F 3421 ~~567481~~ ——— = part, pre-mod. 3421 (no longer supplied as spare part)

D 2321 532465 ——— = part, post-mod. 2321

When ordering, it is advisable to consult the "RULES FOR SPARE PARTS" table.

532421 mm 30 ——— = part, 30 mm. long

153432+0,2 ——— = part oversized by 0,2 mm.

101234–0,2 ——— = part undersized by 0,2 mm.

101440 sp. 1.25 ——— = part, 1.25 mm thick

107650 gr. 50 ——— = part, 50 gr. heavy

543873 s. ——— = L.H. component (*)

543874 d. ——— = R.H. component (*)

518765 Ø 6,5 ——— = part, Ø 6.5 mm.

543217 gs. ——— = component for L.H.D. car

564786 gd. ——— = component for R.H.D. car

518756 TAV. 69.30 – = part illustrated in the exploded view table 69.30

TABLE VALIDITY (bottom left)

up to car s/no. 5008654 (or engine) TABLE is valid up to car chassis/ engine no. 500864

from car s/no. 5008655 (or engine) TABLE is valid from car chassis/engine no. 5008655

BREAKDOWN TABLE

It lists the part nos. of the replacement parts together with the quantity and the nomenclature in five languages.
Possible remarks, symbols or abbreviations are listed in only the Italian language column.

INDICATIONS AND ABRIDGEMENTS

GR.	=	unit
SR.	=	set
COMPL.	=	assy. global
SP.	=	thickness
S.	=	L.H. (*)
D.	=	R.H. (*)
ANT.	=	front section
POST.	=	rear section
SUP.	=	upper section
INF.	=	lower section
EST.	=	outer part
INT.	=	inner part
LAT.	=	side part
CENTR.	=	center part
RM.	=	reverse gear
1A, 2A . . .	=	1st, 2nd . . . speed
N.	=	no.
GS.	=	L.H.D.
GD.	=	R.H.D.
ASP.	=	inlet part
SCAR.	=	exhaust part

IN QUANTITY COLUMN

0	=	supplied in meters or optionally

(*) In relation to car steerage

ALLGEMEINE HINWEISE ZUR BENUTZUNG DES ERSATZTEILE-KATALOGS

Sämtliche Ersatzteile sind durch die Bestellnummer, die Bezeichnung wie auch durch die Anzahl der in jedem Aggregat befindlichen Einzelteile und schliesslich durch die Katalogtafeln und Abbildungen als solche erkenntlich.

Unter Rücksichtnahme auf die von Zeit zu Zeit in der Fabrikation auftretenden Neuerungen und somit auch Änderungen der Katalognummer, Bezeichnungen und Mengenangaben ist es notwendig, dass die ERSATZTEILLAGER mit grösster Aufmerksamkeit diesen Änderungen Folge leisten, über welche sie durch Ergänzungen informiert werden.

Alle in vorliegendem Katalog verzeichneten Ersatzteile sind bei unserem Zentralersatzteillager verfügbar. Für Ersatzteile von Zulieferfirmen ist im Schlussteil dieses Katalogs eine besondere Vergleichstabelle vorgesehen, der folgende Angaben zu entnehmen sind: Alfa Romeo - Bestell- nummer, Name des Lieferanten sowie zutreffende Ersatzteilnummer.

Bei jeder Bestellung muss ausser der im Katalog festgestellten Bestellnummer auch die Fahrgestell-und Motornummer der Fahrzeuge angeführt werden für welches die Teile bestimmt sind. Es ist ausserdem notwendig, dass die Bestellungen mit den im Katalog angeführten Bezeichnungen der Teile wörtlich identisch sind.

BILDTAFELN

In jeder Tafel sind die entsprechenden Ersatzteile dargestellt. Jede Bildtafel trägt rechts oben eine Code-Nummer, die Benennung der TAFEL (links oben) und die Modellbezeichnung (rechts unten). Alle in der Bildtafel dargestellten Ersatzteile sind mit der zutreffenden Bestell-Nummer sowie daneben-stehenden Hinweisen (Änderungs-Nummer, Bezug, usw.) versehen, wodurch das Teil in der Bildtafel sofort festgestellt werden kann.

IN TAFELN VERWENDETE BEZEICHNUNGEN UND ABKÜRZUNGEN

101100 ——— = normalliefertbares Teil

510654
521234 ——— = wahlweise lieferbare Teile

543765* ——— = Teil einer besonderen Ausführung, Gültigkeit auf Tafelrückseite einsehen

F2341 543765 ——— = Teil vor Änderung 2341 (wird noch als E-Teil geliefert)

F3421 567431 ——— = Teil vor Änderung 3421 (nicht mehr lieferbar)

D2321 532465 ——— = Teil nach Änderung 2321

Zur korrekten Ausschreibung der Bestellungen ist überdies auch die Tafel ERSATZTEIL-NORMEN einzusehen.

532421 mm 30 ——— = Teil ist 30 mm lang

153432+0,2 ——— = Teil mit 0,2 mm Übermass

153432–0,2 ——— = Teil mit 0,2 mm Untermass

101440 sp. 1,25 ——— = Teil 1,25 mm dick

107663 gr 50 ——— = Teil wiegt 50 g

543873 s ——— = Teil links (*)

543874 d ——— = Teil rechts (*)

518765 Ø 6,5 ——— = Teil hat 6,5 mm Durchmesser

543217 gs ——— = Teil für Linkslenker

564786 gd ——— = Teil für Rechtslenker

518576 TAV. 69.30 – = Teil in TAFEL 69.30 abgebildet

GÜLTIGKEIT DER TAFEL (unten links)

FINO veic. 5008654 (oder mot.) die TAFEL gilt bis Fg-Nr. (oder Motor-Nr.) 5008654

DAL veic. 5008655 (oder mot.) die TAFEL gilt ab Fg-Nr. (oder Motor-Nr.) 5008655

ERSATZTEILE - TEXT

Die Bestellnummern für Ersatzteile werden nochmals wiedergegeben, begleitet von Stückzahl und Benennung in fünf Sprachen.
Gegebene Hinweise oder Abkürzungen sind nur in der Spalte der italienischen Fassung enthalten.

IM TEXTTEIL DER TAFELN VERWENDETE BEZEICHNUNGEN UN ABKÜRZUNGEN (auf Rückseite der Tafeln)

GR.	=	Gruppe
SR.	=	Serie
COMPL.	=	Komplett - Baugruppe
SP.	=	Dicke - Stärke
S.	=	Teil links (*)
D.	=	Teil rechts (*)
ANT.	=	Teil vorne
POST.	=	Teil hinten
SUP.	=	Teil oben
INF.	=	Teil unten
EST.	=	Teil aussen
INT.	=	Teil innen
LAT.	=	Teil seitlich
CENTR.	=	Mittelteil
RM	=	RG - Rückwärtsgang
1A, 2A ...	=	1°, 2° ... Gang
N.	=	Nummer
GS	=	Linkslenker - LL
GD	=	Rechtslenker - RL
ASP.	=	Teile für Einlass
SCAR.	=	Teile für Auslass

IN SPALTE STÜCKZAHL

0	=	Meterware oder auf Wunsch lieferbar

(*) zur Fahrtrichtung des Fahrzeuges

ADVERTENCIAS GENERALES PARA CONSULTAR EL CATALOGO DE REPUESTOS

Todas las piezas que puedan ser pedidas como piezas de recambio, se pueden individuar por el número de pedido, por la denominación y la cantidad presente en cada grupo, en las tablas de texto que acompañan las ilustraciones.

Considerando que las variantes cada vez introducidas en la fabricación, llevan a cambiar tales números, denominaciones y cantidad en el tiempo, es necesario que los Almacenes de Partes de Recambio sigan atentamente las variaciones comunicadas mediante los opúsculos de puesta al día.

Todas las piezas contenidas en el presente catálogo son disponibles en los almacenes de nuestro Servicio Repuestos Central. Para las piezas provenientes de Casas abastecedoras externas, ha sido añadida, al final del catálogo, una tabla de comparación expresamente perfilada, que comprende: el número de pedido Alfa Romeo, el nombre del abastecedor y el número categórico correspondiente.

Todos los pedidos deben ser efectuados indicando además del número de la pieza controlada en el Catalogo, el numero del bastidor y del motor del vehículo sobre el cual tendrán que ser empleadas las piezas requeridas. Es conveniente que los pedidos sean completados con el nombre exacto de la pieza señalada en las tablas del texto.

LAMINAS

Ilustran las piezas de repuesto contenidas en cada una de ellas. Cada LAMINA lleva en alto, a la derecha, el número de LAMINA codificado, la denominación de la LAMINA (en alto, a la izquierda) y la indicación del modelo (abajo, a la derecha). Todas las piezas de repuesto ilustradas en las LAMINAS se pueden distinguer por el numero de pedido con, a los lados, todas las demás indicaciones (Numero de la modificación, referencias, etc.) suficientes para poder localizar la pieza de repuesto directamente en la LAMINA.

INDICACIONES Y ABREVIATURAS USADAS EN LAS LAMINAS

101100 ——— = Parte de normal suministro

610654
831234 ——— = Partes suministradas en alternativa

543765* ——— = parte específica de una versión, consultar en el dorso de la LAMINA su validez

F234! 543705 ——— = parte premodificación 2341 (todavia es suministrado como repuesto)

F342! 567431 ——— = parte premodificación 3421 (ya no es suministrado como recambio)

D222! 532165 ——— = parte postmodificación 222!

Para un pedido más correcto de las piezas de repuesto es necesario, además, consultar las láminas NORMAS DE REPUESTO.

532421 mm 30 ——— = pieza que tiene una longitud de 30 mm.

153432 + 0,2 ——— = pieza aumentada en 0,2 mm.

101234 – 0,2 ——— = pieza disminuida en 0,2 mm.

101440 sp. 1,25 ——— = pieza que tiene un espesor de 1,25 mm.

107033 gr. 50 ——— = pieza que tiene un peso de 50 gr.

543873 s ——— = particular izquierdo (*)

543874 d ——— = particular derecho (*)

518765 Ø 6,5 ——— = parte que tiene un diámetro de 6,5 mm.

543217 gs ——— = particular para vehiculo con g. izquierda

564786 gd ——— = particular para vehiculo con guía derecha

518758 LAM. 69.30 — = parte ilustrada en la LAMINA 69.30

VALIDEZ DE LA LAMINA (en fondo a la izquierda)

HASTA vehíc. 5008654 — (o también mot.) la LAMINA tiene validez hasta el vehiculo con número de bastidor (o también de motor) 500864

DESDE vehíc. 5008655 — (o también motor) la LAMINA tiene validez desde el vehiculo con numero de bastidor (o motor) 5008655

TESTO PARTES DE REPUESTO

Repite el número de pedido de la parte de repuesto, con la cantidad y la denominación en cinco idiomas.
Las eventuales indicaciones y abreviaciones están referidas solamente a la columna correspondiente al Testo en italiano.

INDICACIONES Y ABREVIATURAS

GR.	=	grupo
SR.	=	serie
COMPL.	=	completo-complexivo
SP.	=	espesor
S.	=	parte izquierda
D.	=	parte derecha
ANT.	=	parte anterior
POST.	=	parte posterior
SUP.	=	parte superior
INF.	=	parte inferior
EST.	=	parte externa
INT.	=	parte interna
LAT.	=	parte lateral
CENTR.	=	parte central
RM.	=	marcha atras
1A, 2A . . .	=	1a, 2a . . . velocidad
N.	=	número
GS.	=	guía izquierda
GD	=	guía derecha
ASP.	=	particular para aspiración
SCAR.	=	particular para escape

EN LA COLUMNA CANTIDAD

0	=	suministrado en metros o también a voluntad

(*) Con relación a la dirección de marcha del vehiculo

VALIDITA'
Application des équipements selon le pays de destination
Validity
Gültigkeit
Validez

1ª EDIZIONE 1974 APRILE
1ère EDITION AVRIL
1st EDITION APRIL
1. AUSGABE APRIL
1ra EDICION ABRIL

	Varianti per:	Equipement pour:	Variants:	Abgeleitete Typen:	Variaciones para:
A	Austria	Autriche	Austria	Österreich	Austria
B	Belgio	Belgique	Belgium	Belgien	Belgica
DK	Danimarca	Danemark	Denmark	Dänemark	Dinamarca
F	Francia	France	France	Frankreich	Francia
SF	Finlandia	Finlande	Finland	Finnland	Finlandia
D	Germania	Allemagne	Germany	Deutschland	Alemania
GB	Gran Bretagna	Grande Bretagne	England	England	Inglaterra
YU	Yugoslavia	Yougoslavie	Yugoslavia	Jugoslavien	Yugoslavia
N	Norvegia	Norvége	Norway	Norwegen	Noruega
NL	Olanda	Hollande	Holland	Holland	Holanda
S	Svezia	Suède	Sweden	Schweden	Suecia
CH	Svizzera	Suisse	Switzerland	Schweiz	Suiza

NORME DI RICAMBIO
Consignes d'interchangeabilité
Rules for spare Parts
Ersatzteil - Normen
Normas de repuesto

1ª EDIZIONE 1ère EDITION 1st EDITION 1. AUSGABE 1ra EDICION	APRILE 1974 APRIL APRIL APRIL ABRIL						

	TAV. interessate Planches Affected TAV. Betrifft Tafel LAM. interesadas	Applicazione Point de depart Applicability Verwendung Aplicación	INFORMAZIONI RELATIVE ALLA MODIFICA	OBJET DE LA MODIFICATION	NOTES ABOUT MODIFICATIONS	DIE ÄNDERUNG BETREFFENDE MITTEILUNGEN	INFORMACIONES RELATIVAS A LA MODIFICACION



ORGANES MÉCANIQUES
MECHANICAL UNITS
MECHANISCHE AGGREGATE
GRUPOS MECANICOS

GRUPPI MECCANICI

INDICE DELLE TAVOLE
REPERTOIRE DES PLANCHES
INDEX OF TABLES
TAFELVERZEICHNIS
INDICE DE LAMINAS

DENOMINAZIONE	DESIGNATION	DESCRIPTION	BENENNUNG	DENOMINACIONES	TAV	PAG
BASAMENTO E SUPPORTI	BLOC-CYLINDRES ET SUPPORTS	CYLINDER BLOCK AND MOUNTINGS	KURBELGEHAUSE UND LAGERDECKEL	BASAMENTO Y SOPORTES	01.01/0	21
BULLONERIA DEL BASAMENTO	BOULONNERIE DU BLOC CYLINDRES	CYLINDER BLOCK HARDWARE	SCHRAUBEN UND MUTTERN FUR KURBELGEHAUSE	TORNILLERIA DEL BASAMENTO	01.02/0	23
COPERCHIO ANTERIORE BASAMENTO	CARTER DE DISTRIBUTION	FRONT CRANKCASE COVER	DECKEL FUR KURBELGEHAUSE	TAPA ANTERIOR DEL BASAMENTO	01.04/0	27
COPERCHIO POSTERIORE BASAMENTO	CARTER ARRIERE MOTEUR	CRANKCASE REAR COVER	DECKEL FUR KURBELGEHAUSE	TAPA POSTERIOR DEL BASAMENTO	01.06/0	29
TESTA CILINDRI	CULASSE	CYLINDER HEAD	ZYLINDERKOPF	CULATA	01.08/0	33
PARTICOLARI TESTA CILINDRI	DETAIL DE LA CULASSE	CYLINDER HEAD DETAILS	ZYLINDERKOPF-EINZELTEILE	PIEZAS DE LA CULATA	01.09/0	35
BULLONERIA TESTA CILINDRI	BOULONNERIE DE LA CULASSE	CYLINDER HEAD HARDWARE	SCHRAUBEN UND MUTTERN FUR ZYLINDERKOPF	BULONERIA DE LA CULATA	01.10/0	37
COPPA OLIO	CARTER HUILE	OIL SUMP	OLWANNE	CARTER ACEITE	01.20/0	39
PARTICOLARI ALBERO MOTORE E PISTONI	DETAIL DE L EQUIPAGE MOBILE	COMPONENTS OF CRANKSHAFT, CON. RODS AND PISTONS	KURBELTRIEB	PIEZAS CIGUENAL Y PISTONES	01.31/0	41

DENOMINAZIONE	DESIGNATION	DESCRIPTION	BENENNUNG	DENOMINACIONES	TAV	PAG
GRUPPO ALBERO MOTORE PISTONI E CUSCINETTI	GROUPE VILLEBREQUIN PISTONS COUSSINETS	CRANKSHAFT,PISTONS & BEARINGS SET	KURBELTRIEB-REPARATURSATZ	GRUPO CIGUEÑAL PISTONES Y COSINETES	01.32/0	45
COMANDO DISTRIBUZIONE - PIGNONE COMANDO CONTAGIRI	DISTRIBUTION-PIGNON DE COMMANDE-COMPTE-TOURS	VALVE TIMING GEAR - TACHOMETER DRIVING PINION	VENTILSTEUERUNG DREHZAHLMESSER - ANTRIEBSRITZEL	MANDO DISTRIBUCION - PINON MANDO CUENTA REVOLUCIONES	01.41/0	49
VALVOLE MOLLE BICCHIERI ECC.	SOUPAPES RESSORTS POUSSOIRS,ETC.	VALVES, CUPS, SPRINGS, ETC.	VENTILE FEDERN VENTILBECHER USW.	VALVULAS MUELLES EMPUJADORES, ETC.	01.42/0	53
PARTICOLARI SMERIGLIATURA VALVOLE	COLLECTION DE RODAGE SOUPAPES	VALVE LAPPING PART	ERSATZTEILE FUR VENTILSCHLEIFEN	PARTICULARES PARA LA ESMERILADORA VALVULAS	01.90/0	65
COMANDO POMPA D ALIMENTAZIONE	COMMANDE DE POMPE D ALIMENTATION	FUEL PUMP DRIVE	KRAFTSTOFFPUMPENANTRIEB	MANDO BOMBA DE ALIMENTACION	02.01/0	67
SERBATOIO DEL CARBURANTE	RESERVOIR A ESSENCE	FUEL TANK	KRAFTSTOFFBEHELTER	DEPOSITO DEL CARBURANTE	02.03/0	69
TUBAZIONI DEL CARBURANTE	TUYAUTERIE ESSENCE	FUEL PIPING	KRAFTSTOFFLEITUNGEN	TUBERIAS DEL CARBURANTE	02.04/0	71
POMPA D ALIMENTAZIONE FISPA	POMPE D ALIMENTATION	FUEL PUMP	KRAFTSTOFFPUMPE	BOMBA DE ALIMENTACION	02.10/0	73
FILTRO DEL CARBURANTE -FISPA-	FILTRE A ESSENCE	FUEL FILTER	KRAFTSTOFFILTER	FILTRO DEL CARBURANTE	02.20/0	75
FILTRO DEL CARBURANTE -TECNOCAR-	FILTRE A ESSENCE	FUEL FILTER	KRAFTSTOFFILTER	FILTRO DEL CARBURANTE	02.21/0	77
FILTRO DEL CARBURANTE -MALPASSI-	FILTRE A ESSENCE	FUEL FILTER	KRAFTSTOFFILTER	FILTRO DEL CARBURANTE	02.22/0	79

DENOMINAZIONE	DESIGNATION	DESCRIPTION	BENENNUNG	DENOMINACIONES	TAV	PAG
CARBURATORE -WEBER-	CARBURATEUR	CARBURETTOR	VERGASER	CARBURADOR	02.40/0	81
PARTICOLARI DEL CARBURATORE - WEBER	DETAIL DU CARBURATEUR	CARBURETTOR COMPONENTS	EINZELTEILE DES VERGASERS	PIEZAS DEL CARBURADOR	02.41/0	85
CARBURATORE -DELLORTO-	CARBURATEUR	CARBURETTOR	VERGASER	CARBURADOR	02.46/0	89
CARBURATORE -DELLORTO-	CARBURATEUR	CARBURETTOR	VERGASER	CARBURADOR	02.46/1	91
COMANDI DEL CARBURATORE PER VETT. G.S.	COMMANDE DE CARBURATEUR VOIT. D.A G.	CARBURETTOR CONTROLS FOR L.H.D. CARS	VERGASERGESTANGE FUR LI	MANDOS DEL CARBURADOR PARA AUTOMOV.G.IZQ.	02.62/0	93
COMANDI DEL CARBURATORE PER VETT.G.D.	COMMANDE DE CARBURATEUR VOIT. D.A D.	CARBURETTOR CONTROLS FOR R.H.D. CARS	VERGASERGESTANGE FUR RI	MANDOS DEL CARBURADOR PARA AUTOMOV.G.DER.	02.63/0	97
COMANDI A MANO ACCELERATORE E STARTER	COMMANDE A MAIN ACCELERATEUR ET STARTE	ACCELERATOR AND CHOKE CONTROL	HANDGAS UND STARTERBETATIGUNG	MANDOS DE MANO ACCELERADOR Y STARTER	02.64/0	101
PRESE E FILTRO ARIA	CONDUITS ET FILTRE A AIR	AIR DUCT AND CLEANER	SAUGGERAUSCHDAMPFER UND LUFTFILTER	TOMAS Y FILTRO AIRE	02.70/0	105
PRESE E FILTRO ARIA	CONDUITS ET FILTRE A AIR	AIR DUCT AND CLEANER	SAUGGERAUSCHDAMPFER UND LUFTFILTER	TOMAS Y FILTRO AIRE	02.70/1	109
COLLETTORE D ALIMENTAZIONE	COLLECTEUR D ALIMENTATION	INTAKE MANIFOLD	ANSAUGKRUMMER	COLECTOR DE ALIMENTACION	02.90/0	111
COLLETTORE E TUBI DI SCARICO	COLLECTEUR ET TUBES D ECHAPPEMENT	EXHAUST MANIFOLD AND PIPES	AUSPUFFKRUMMER UND AUSPUFFANLAGE	COLECTOR Y TUBOS DE ESCAPE	02.92/0	115

DENOMINAZIONE	DESIGNATION	DESCRIPTION	BENENNUNG	DENOMINACIONES	TAV	PAG
PARTICOLARI FISSAGGIO TUBI SCARICO	FIXATION DES TUBES D ECHAPPEMENT	EXHAUST PIPE ATTACHING PARTS	AUSPUFFANLAGE-BEFESTIGUNG	PIEZAS FIJACION TUBO ESCAPE	02.05/0	117
POMPA OLIO	POMPE A HUILE	OIL PUMP	OLPUMPE	BOMBA ACEITE	03.10/0	119
FILTRO OLIO	FILTRE A HUILE	OIL FILTER	OLFILTER	FILTRO ACEITE	03.27/0	121
POMPA ACQUA E SUO COMANDO	POMPE A EAU	WATER PUMP AND DRIVE	KUHLWASSERPUMPE	BOMBA AGUA	04.00/0	123
GRUPPO REVISIONE POMPA ACQUA	COLLECTION-REPARATION DE POMPE A EAU	WATER PUMP OVERHALL KIT	REPARATURSATZ FUER KUEHLWASSERPUMPE	GRUPOS REVISION BOMBA AGUA	04.02/0	125
RADIATORE ACQUA	RADIATEUR EAU	RADIATOR	WASSERKUEHLER	RADIATOR AGUA	04.10/0	127
TUBAZIONI ACQUA DEL RADIATORE	TUYAUTERIE EAU RADIATEUR	WATER HOSES	KUEHLWASSERLEITUNGEN	TUBOS AGUA DEL RADIATOR	04.11/0	131
GRUPPO GUARNIZIONI MOTORE	COLLECTION DE JOINTS MOTEUR	ENGINE SEAL KIT	MOTORDICHTUNGEN	GRUPO GUARNICIONES MOTOR	09.00/0	133
ALBERI E GIUNTI DI TRASMISSIONE	ARBRES ET JOINTS DE TRANSMISSION	PROPELLER SHAFT AND JOINTS	GELENKWELLEN UND GELENKE	EJES Y JUNTAS DE TRANSMISSION	10.01/0	137
PARTICOLARI ALBERO DI TRASMISSIONE	DETAIL DE ARBRE DE TRANSMISSION	PROPELLER SHAFT DETAILS	EINZELTEILE DER GELENKWELLE	DETALLES DEL EJE DE TRANSMISION	10.02/0	139
SERBATOIO E TUBI COMANDO IDRAULICO FRIZIONE	RESERVOIR ET TUYAUTERIE DE COMMANDE HYDRAULIQUE EMBRAYAGE	CLUTCH FLUID RESERVOIR AND PIPING	EHALTER U. LEITUNGEN F. HYDR. KUPPLUNGSBETATIGUNG	DEPOSITO Y TUBERIAS MANDO HIDRAULICO EMBRAGUE	11.10/0	143

DENOMINAZIONE	DESIGNATION	DESCRIPTION	BENENNUNG	DENOMINACIONES	TAV	PAG
POMPA COMANDO FRIZIONE - ATE	MAITRE-CYLINDRE COMMANDE - EMBRAYAGE	CLUTCH MASTER CYLINDER	GEBERZYLINDER KUPPLUNGSBETATIGUNG	BOMBA MANDO EMBRAGUE	11.20/0	145
POMPA COMANDO FRIZIONE -BONALDI	MAITRE-CYLINDRE COMMANDE EMBRAYAGE	CLUTCH MASTER CYLINDER	GEBERZYLINDER KUPPLUNGSBETATIGUNG	BOMBA MANDO EMBRAGUE	11.21/0	147
POMPA COMANDO FRIZIONE -BONALDI	MAITRE-CYLINDRE COMMANDE EMBRAYAGE	CLUTCH MASTER CYLINDER	GEBERZYLINDER KUPPLUNGSBETATIGUNG	BOMBA MANDO EMBRAGUE	11.21/1	149
CILINDRETTO COMANDO FRIZIONE - ATE	CYLINDRE-RECEPTEUR D EMBRAYAGE	CLUTCH SLAVE CYLINDER	NEHMERZYLINDER KUPPLUNGSBETATIGUNG	CILINDRITO MANDO EMBRAGUE	11.30/0	151
CILINDRETTO COMANDO FRIZIONE -BONALDI	CYLINDRE-RECEPTEUR D EMBRAYAGE - BONALDI	CLUTCH SLAVE CYLINDER	NEHMERZYLINDER KUPPLUNGSBETATIGUNG	CILINDRITO MANDO EMBRAGUE	11.31/0	153
CILINDRETTO COMANDO FRIZIONE	CYLINDRE-RECEPTEUR D EMBRAYAGE	CLUTCH SLAVE CYLINDER	NEHMERZYLINDER KUPPLUNGSBETATIGUNG	CILINDRITO MANDO EMBRAGUE	11.32/0	155
FRIZIONE	EMBRAYAGE	CLUTCH	KUPPLUNG	EMBRAGUE	11.50/0	157
PARTICOLARI FRIZIONE	DETAILS DE L EMBRAYAGE	CLUTCH COMPONENTS	EINZELTEILE DER KUPPLUNG	DETALLES EMBRAGUE	11.51/0	159
CAMBIO E DIFFERENZIALE, SCATOLE E COPERCHI	BOITE ET DIFFERENTIEL, CARTERS ET COUVERCLES	TRANSMISSION-AND DIFFERENTIAL UNIT CASING, AND COVERS	WECHSEL-UND AUSGLEICHGETRIERE, GEHAUSE UND DECKEL	CAMBIO Y DIFERENCIAL, CAJA Y TAPAS	12.00/0	161
BULLONERIA DEL CAMBIO DI VELOCITA	BOULONNERIE DE BOITE DE VITESSES	GEARBOX HARDWARE	SCHRAUBEN U. MUTTERN F. WECHSELGETRIEBE	BULONERIA DEL CAMBIO DE VELOCIDADES	12.02/0	163
ALBERO PRIMARIO	ARBRE PRIMAIRE	MAINSHAFT	HAUPTWELLE	EJE PRIMARIO	12.12/0	167

DENOMINAZIONE	DESIGNATION	DESCRIPTION	BENENNUNG	DENOMINACIONES	TAV	PAG
RUOTISMI ALBERO SECONDARIO	PIGNONNERIE ARBRE SECONDAIRE	LAYSHAFT GEARS	RADSATZ DER VORGELEGEWELLE	JUEGO ENGRANAJES EJE SECUNDARIO	12.16/0	169
RUOTISMI ALBERO SECONDARIO	PIGNONNERIE ARBRE SECONDAIRE	LAYSHAFT GEARS	RADSATZ DER VORGELEGEWELLE	JUEGO ENGRANAJES EJE SECUNDARIO	12.16/1	173
RUOTISMI ALBERO SECONDARIO	PIGNONNERIE ARBRE SECONDAIRE	LAYSHAFT GEARS	RADSATZ DER VORGELEGEWELLE	JUEGO ENGRANAJES EJE SECUNDARIO	12.16/2	175
RUOTISMI R.M.	PIGNONNERIE DE MARCHE ARRIERE	REVERSE GEARS	RADSATZ DES RUCKWARTSGANGES	JUEGO ENGRANAJES MARCHA ATRAS	12.17/0	177
COMANDI INTERNI DEL CAMBIO	COMMANDE INTERIEURE DE BOITE DE VITESSES	GEARBOX INTERNAL CONTROL	INNERE GETRIEBESCHALTUNG	MANDOS INTERNOS DEL CAMBIO	12.20/0	179
PARTICOLARI COMANDI INTERNI CAMBIO	DETAIL DE COMMANDE INTERIEURE DE BOITE DE VITESSES	GEARBOX CONTROL DETAILS	EINZELTEILE DER INNEN GETRIEBESCHALTUNG	DETALLE MANDO INTERIOR CAMBIO	12.21/0	181
LEVA COMANDO CAMBIO	LEVIER DE CHANGEMENT DE VITESSES	GEARSHIFT LEVER	GETRIEBESCHALTHEBEL	PALANCA ACCIONAMIENTO CAMBIO	12.22/0	183
RUOTISMI DEL PONTE	MECANISME DU PONT	DIFFERENTIAL GEARS	RADSATZ DER HINTERACHSE	MECANISMO DEL PUENTE	14.10/0	185
SCATOLA DIFFERENZIALE	BOITIER DE DIFFERENTIEL	DIFFERENTIAL CASE	AUSGLEICHGETRIEBE GHAUSE	CAJA DIFERENCIAL	14.30/0	189
SEMIALBERI DIFFERENZIALE	ARBRES DE ROUES	AXLE SHAFTS	HINTERACHSWELLEN	SEMIEJES DIFERENCIAL	14.40/0	191
TUBAZIONI PER COMANDO IDRAULICO FRENI	CANALISATIONS DE FREIN HYDRAULIQUE	HYDRAULIC BRAKE PIPING	BREMSLEITUNGEN	TUBERIAS PARA ACCIONAMIENTO HIDRAULICO FRENOS	21.01/0	193

DENOMINAZIONE	DESIGNATION	DESCRIPTION	BENENNUNG	DENOMINACIONES	TAV	PAG
PARTICOLARI DEL COMANDO IDRAULICO FRENI	DETAIL DE LA COMMANDE HYDRAULIQUE DE FREINS	COMPONENTS OF BRAKE HYDRAULIC SYSTEM	EINZELTEILE DER HYDR. BREMSBETATIGUNG	PIEZAS DEL ACCIONAMIENTO FRENOS	21.02/0	195
GRUPPO SERVOFRENO POMPA-ATE	ENSEMBLE SERVO-FREIN MAITRE-CYLINDRE	MASTER CYLINDER BOOSTER UNIT	BREMSVERSTARKER - HAUPTBREMSZYLINDER*	GRUPO SERVOFRENO-BOMBA	21.10/0	197
GRUPPO SERVOFRENO POMPA-BONALDI	ENSEMBLE SERVO-FREIN MAITRE-CYLINDRE	MASTER CYLINDER BOOSTER UNIT	BREMSVERSTARKER - HAUPTBREMSZYLINDER*	GRUPO SERVOFRENO-BOMBA	21.12/0	199
PARTICOLARI DEL SERBATOIO FRENI - ATE	DETAIL DU RESERVOIR D ALIMENTATION	RESERVOIR HARDWARE	EINZELTEILE DES AUSGLEICHBEHAELTERS	PIEZAS DEL DEPOSITO ALIMENTACION	21.30/0	201
PARTICOLARI DEL SERBATOIO FRENI - BONALDI	DETAIL DU RESERVOIR D ALIMENTATION	RESERVOIR HARDWARE	EINZELTEILE DES AUSGLEICHBEHAELTERS	PIEZAS DEL DEPOSITO ALIMENTACION	21.31/0	203
SERVOFRENO PER VETT. G.D.-ATE	SERVO-FREIN VOIT. D.A DI	BRAKE BOOSTER FOR R.H.D. CARS	BREMSVERSTAERKER ZYLINDER F.RL	SERVOFRENO PARA AUTOM. G.D.	21.40/0	205
SERVOFRENO PER VETT. G.D.-BONALDI	SERVO-FREIN VOIT. D. A D.	BRAKE BOOSTER FOR R.H.D. CARS	BREMSVERSTAERKER ZYLINDER F.RL	SERVOFRENO PARA AUTOMOV. G.D.	21.41/0	207
DISCHI E PARATIE PER FRENI ANTERIORI	DISQUES ET DEFLECTEURS DE FREINS AVANT	DISCS AND SHIELDS FOR FRONT BRAKES	BREMSSCHEIBEN UND SCHUTZBLECHE FUR VORDERRADBREMSE	DISCOS Y DEFLECTORES PARA FRENOS ANTERIORES	21.50/0	209
PINZA PER FRENI ANTERIORI -ATE	ETRIER DE FREINS AVANT	CALIPER FOR FRONT BRAKES	FESTSATTEL FUER VORDERRADBREMSE	PINZA PARA FRENOS ANTERIORES	21.51/0	211
DISCHI E PARATIE PER FRENI POSTERIORI	DISQUES ET DEFLECTEURS DE FREINS ARRIERE	DISCS AND SHIELDS FOR REAR BRAKES	BREMSSCHEIBEN UND SCHUTZBLECHE FUER HINTERRADBREMSE	DISCOS Y DEFLECTORES PARA FRENOS POSTERIORES	21.60/0	213
PINZA PER FRENI POSTERIORI - ATE	ETRIER DE FREINS ARRIERE	CALIPER FOR REAR BRAKE	FESTSATTEL FUR HINTERRADBREMSE	PINZA PARA FRENOS POSTERIORES	21.61/0	215

DENOMINAZIONE	DESIGNATION	DESCRIPTION	BENENNUNG	DENOMINACIONES	TAV	PAG
LEVA COMANDO FRENO A MANO	LEVIER DE FREIN A MAIN	HANDBRAKE LEVER	STOCKHANDBREMSE	PALANCA MANDO FRENO DE MANO	21.71/0	217
CAVI COMANDO FRENO A MANO	CABLES DE COMMANDE DU FREIN A MAIN	HANDBRAKE CABLES	HANDBREMSEILZUG	CABLES MANDO FRENO DE MANO	21.72/0	219
PEDALI COMANDO FRENI E FRIZIONE PER VETT. G.S.	PEDALES DE FREIN ET EMBRAYAGE VOIT. D.A G.S	BRAKE AND CLUTCH PEDALS FOR L.H.D.CARS	FUSSHEBELWERK F.LL	PEDALES MANDO FRENOS Y EMBRAGUE PARA AUTOMOV. G. IZQ.	21.81/0	221
PARTICOLARI COMANDO FRENI E FRIZIONE PER VETT. G.S.	DETAIL DE LA COMMANDE DE FREIN ET EMBRAYAGE VOIT. D.A G.	BRAKE AND CLUTCH PEDAL HARDWARE FOR L.H.D. CARS	EINZELTEILE DER BREMS U. KUPPLUNGSBETATIGUNG F.LL	PIEZAS MANDO FRENOS Y EMBRAGUE PARA AUTOMOV. G. IZQ.	21.82/0	223
PEDALI COMANDO FRENI E FRIZIONE PER VETT. G.D.	PEDALES DE FREIN ET EMBRAYAGE VOIT. D.A D.	BRAKE AND CLUTCH PEDALS FOR R.H.D. CARS	FUSSHEBELWERK F.RL	PEDALES MANDO FRENOS Y EMBRAGUE PARA AUTOMOV. G.D.	21.83/0	225
PARTICOLARI COMANDO FRENI E FRIZIONE PER VETT. G.D.	DETAIL DE LA COMMANDE DE FREIN ET EMBRAYAGE VOIT. D.A D.	BRAKE AND CLUTCH PEDAL HARDWARE FOR R.H.D. CARS	EINZELTEILE DER BREMS U. KUPPLUNGSBETATIGUNG F.RL	PIEZAS MANDO FRENOS Y EMBRAGUE PARA AUTOMOV. G.D.	21.84/0	227
MOZZI DELLE RUOTE ANTERIORI	MOYEUX DE ROUES AVANT	FRONT WHEEL HUBS	RADNABEN DER VORDERRADER	CUBOS DE LAS RUEDAS DELANTERAS	31.00/0	229
LEVERAGGI DELLA SOSPENSIONE ANTERIORE	FUSEES, BRAS ET ARTICULATION DE SOSPENSION AVAN	FRONT SUSPENSION ARMS	HEBELN DER VORDERRADAUFHANGUNG	PALANQUETAS DE LA SUSPENSION ANTERIOR	31.01/0	231
PARTICOLARI DEI LAVERAGGI INFERIORI SOSPENSIONE ANTERIORE	DETAIL DES BRAS INFERIEURS DE SUSPENSION AVANT	FRONT SUSPENSION LOWER ARM HARDWARE	VORDERRADAUFHANGUNG EINZELTEILE DER QUERLENKER UNTEN	PIEZAS DE LAS PALANQUETAS INFERIORES SUSPENSION ANTERIOR	31.02/0	233
PARTICOLARI DEI LAVERAGGI SUPERIORI SOSPENSIONE ANTERIORE	DETAIL DES BRAS SUPERIEURS DE SUSPENSION AVANT	FRONT SUSPENSION UPPER ARM HARDWARE	VORDERRADAUFHANGUNG EINZELTEILE DER QUERLENKER OBEN	PIEZAS DE LAS PALANQUETAS SUPERIORES SUSPENSION ANTERIOR	31.03/0	235
BARRE DI TORSIONE DELLA SOSPENSIONE ANTERIORE	BARRE DE TORSION DE SUSPENSION AVANT	FRONT SUSPENSION TORSION BARS	DREHSTABE DER VORDERRADAUFHANGUNG	BARRAS DE TORSION DE LA SUSPENSION DELANTERI	31.05/0	237

DENOMINAZIONE	DESIGNATION	DESCRIPTION	BENENNUNG	DENOMINACIONES	TAV	PAG
AMMORTIZZATORI ANTERIORI	AMMORTISSEURS AVANT	FRONT SHOCK ABSORBERS	STOSSDAMPFER VORN	AMORTIGUADORS ANTERIORES	31.06/0	239
BARRA STABILIZZATRICE ANTERIORE	BARRE STABILISATRICE AVANT	FRONT STABILIZER ROD	DREHSTAB VORN	BARRA ESTABILIZADORA ANTERIOR	31.07/0	241
MOZZI DELLE RUOTE POSTERIORI	MOYEUX DE ROUES ARRIERE	REAR WHEEL HUBS	HINTERRADNABEN	CUBOS RUEDAS POSTERIORES	31.10/0	243
SOSPENSIONE POSTERIORE	SUSPENSION ARRIERE	REAR SUSPENSION	HINTERRADAUFHANGUNG	SUSPENSION POSTERIOR	31.11/0	245
ASSALE POSTERIORE	ESSIEU ARRIERE	REAR AXLE	HINTERACHSE	PUENTE POSTERIOE	31.13/0	247
PARTICOLARI E BULLONERIA ASSALE POSTERIORE	DETAIL DE L ESSIEU ARRIERE ET BOULONNERIE	REAR AXLE DETAILS AND HARDWARE	HINTERACHS-EINZELTEILE UND VERSCHRAUBUNGEN	DETALLE Y TORNILLERIA PUENTE POSTERIOR	31.14/0	249
BARRA STABILIZZATRICE POSTERIORE	BARRE STABILISATRICE ARRIERE	REAR STABILIZER ROD	DREHSTAB HINTEN	BARRA ESTABILIZADORA POSTERIOR	31.16/0	251
RUOTE	ROUES	WHEELS	RADER	RUEDAS	31.20/0	253
SCATOLA GUIDA - BURMAN	BOITIER DE DIRECTION	STEERING BOX	LENKGEHAUSE	CAJA DE DIRECCION	32.01/0	257
PARTICOLARI DELLA SCATOLA GUIDA - BURMAN	DETAIL DU BOITIER DE DIRECTION	STEERING BOX HARDWARE	EINZELTEILE DES LENKGEHAUSES	PIEZAS DE LA CAJA DE DIRECCION	32.02/0	261
SCATOLA GUIDA - ZF	BOITIER DE DIRECTION	STEERING BOX	LENKGEHAUSE	CAJA DE DIRECCION	32.03/0	263

DENOMINAZIONE	DESIGNATION	DESCRIPTION	BENENNUNG	DENOMINACIONES	TAV	PAG
PARTICOLARI DELLA SCATOLA GUIDA - ZF	DETAIL DU BOITIER DE DIRECTION	STEERING BOX HARDWARE	EINZELTEILE DES LENKGEHÄUSES	PIEZAS DE LA CAJA DE DIRECCION	32.04/0	267
VOLANTE GUIDA E GRUPPO COMANDI	VOLANT DE DIRECTION ET COMODO	STEERING WHEEL & SWITCH UNIT	LENKRAD UND KOMBI-INSTRUMENT	VOLANTE GUIA Y GRUPO MANDOS	32.10/0	271
SUPPORTO E PIANTONE GUIDA	SUPPORT ET COLONNE DE DIRECTION	STEERING COLUMN & BRACKET	LAGERBOCK UND LENKSTUTZROHR	SOPORTE Y COLUMNA GUIA	32.11/0	275

TAV. 01.01

1 EDIZIONE APRILE
EDITION APRIL
EDITION APRIL
AUSGABE APRIL
EDICION ABRIL
1974

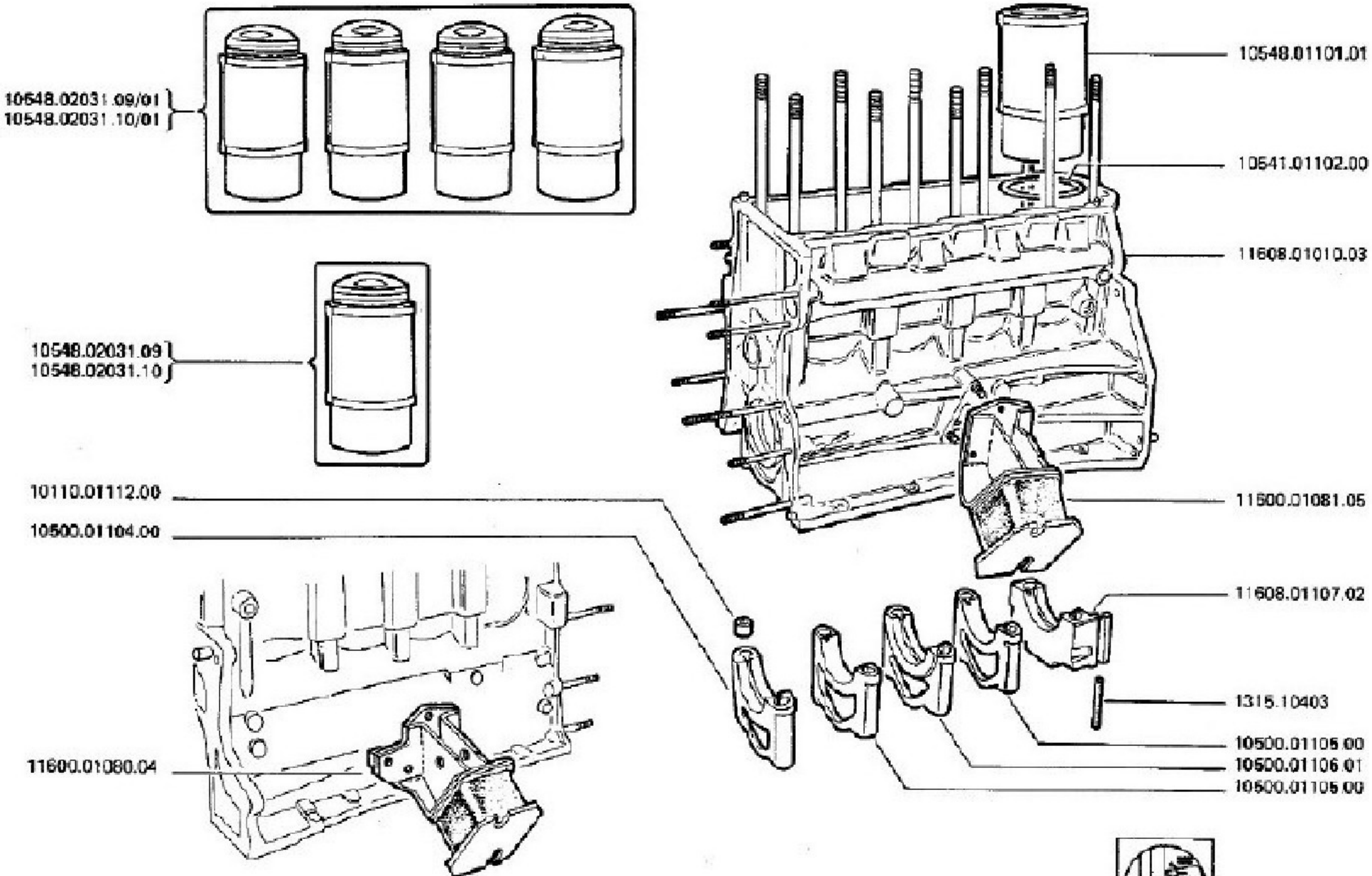

TAV. 01.01/0

BASAMENTO E SUPPORTI
BLOC-CYLINDRES ET SUPPORTS
CYLINDER BLOCK AND MOUNTINGS
KURBELGEHAUSE UND LAGERDECKEL
BASAMENTO Y SOPORTES

MODIFICA	N. ORDINAZIONE	QT.	DENOMINAZIONE	DESIGNATION	DESCRIPTION	BENENNUNG	DENOMINACIONES
	1315.10403	2	CANNOTTO	JOINT D ETANCHEITE	SEAL	DICHTUNG	GUARNICION
	10110.01112.00	10	BOCCOLA	BAGUE	BUSHING	BUECHSE	CASQUILLO
	10500.01104.00	1	CAPPELLO DI BANCO	CHAPEAU DE PALIER	BEARING CAP	NW-LAGERDECKEL	SOPORTE DE BANCO
	10500.01105.00	2	CAPPELLO DI BANCO	CHAPEAU DE PALIER	BEARING CAP	NW-LAGERDECKEL	SOPORTE DE BANCO
	10500.01106.01	1	CAPPELLO DI BANCO	CHAPEAU DE PALIER	BEARING CAP	NW-LAGERDECKEL	SOPORTE DE BANCO
	10541.01102.00	4	ANELLO TENUTA	JOINT	SEAL	DICHTRING	JUNTA
	10548.01101.01	4	CANNA	CHEMISE	LINER	LAUFBUECHSE	CAMISA
	10548.02031.09 *	4	CANNA E PISTONE	CHEMISE ET PISTON	PISTON & LINER ASSY	L BUECHSE U. KOLBEN	CAMISA Y PISTON
	10548.02031.09/01*	1	CANNE E PISTONI	COL. CHEMISES/PISTON	PISTONS & LINERS SET	L BUECHSEN U. KOLBEN	CAMISAS Y PISTONES
	10548.02031.10 *	4	CANNA E PISTONE	CHEMISE ET PISTON	PISTON & LINER ASSY	L BUECHSE U. KOLBEN	CAMISA Y PISTON
	10548.02031.10/01*	1	CANNE E PISTONI	COL. CHEMISES/PISTON	PISTONS & LINERS SET	L BUECHSEN U. KOLBEN	CAMISAS Y PISTONES
	11600.01080.04	1	SUPPORTO MOTORE	SUPPORT	SUPPORT	LAGERUNG	SOPORTE
	11600.01081.05	1	SUPPORTO MOTORE	SUPPORT	SUPPORT	LAGERUNG	SOPORTE
	11608.01010.03	1	BASAMENTO COMPL.	CARTER-CYLINDRES	CRANKCASE	KURBELGEHAEUSE	BANCADA
	11608.01107.02	1	CAPPELLO DI BANCO	CHAPEAU DE PALIER	BEARING CAP	NW-LAGERDECKEL	SOPORTE DE BANCO

* ALTERNATIVA ALTERNATIVE ALTERNATIVE WAHLWEISE ALTERNATIVA

BOULONNERIE DU BLOC-CYLINDRES
CYLINDER BLOCK HARDWARE
SCHRAUBEN UND MUTTERN FÜR KURBELGEHÄUSE
TORNILLERIA DEL BASAMENTO

1ª EDIZIONE APRILE 1974
1ère EDITION AVRIL
1st EDITION APRIL
1. AUSGABE APRIL
1ra EDICION 1er ABRIL

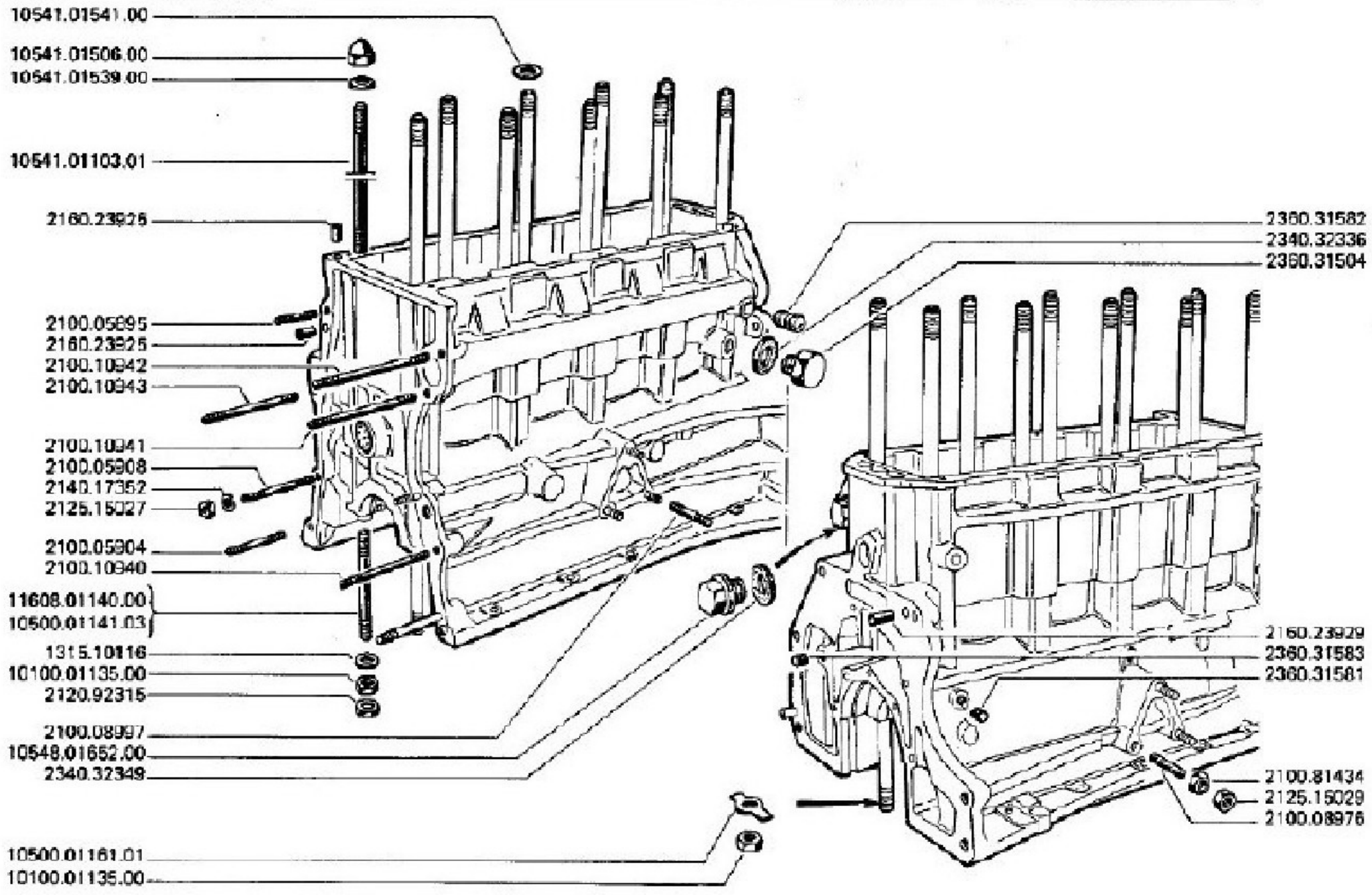

TAV. 01.0270

BULLONERIA DEL BASAMENTO
BOULONNERIE DU BLOC-CYLINDRES
CYLINDER BLOCK HARDWARE
SCHRAUBEN UND MUTTERN FUR KURBELGEHAUSE
TORNILLERIA DEL BASAMENTO

MODIFICA	N. DISEGNAZIONE	QT.	DENOMINAZIONE	DÉSIGNATION	DESCRIPTION	BENENNUNG	DENOMINACIONES
	1315.10116	8	RONDELLA	RONDELLE	WASHER	SCHEIBE	ARANDELLA
	2100.05895	1	PRIGIONIERO	GOUJON	STUD	STIFTSCHRAUBE	PRISIONERO
	2100.05904	1	PRIGIONIERO	GOUJON	STUD	STIFTSCHRAUBE	PRISIONERO
	2100.05908	1	PRIGIONIERO	GOUJON	STUD	STIFTSCHRAUBE	PRISIONERO
	2100.08976	3	PRIGIONIERO	GOUJON	STUD	STIFTSCHRAUBE	PRISIONERO
	2100.08997	3	PRIGIONIERO	GOUJON	STUD	STIFTSCHRAUBE	PRISIONERO
	2100.10940	1	PRIGIONIERO	GOUJON	STUD	STIFTSCHRAUBE	PRISIONERO
	2100.10941	1	PRIGIONIERO	GOUJON	STUD	STIFTSCHRAUBE	PRISIONERO
	2100.10942	1	PRIGIONIERO	GOUJON	STUD	STIFTSCHRAUBE	PRISIONERO
	2100.10943	3	PRIGIONIERO	GOUJON	STUD	STIFTSCHRAUBE	PRISIONERO
	2100.81434	6	RONDELLA	RONDELLE	WASHER	SCHEIBE	ARANDELLA
	2120.92315	8	DADO	ECROU	NUT	MUTTER	TUERCA
	2125.15027	3	DADO	ECROU	NUT	MUTTER	TUERCA
	2125.15029	6	DADO	ECROU	NUT	MUTTER	TUERCA
	2140.17352	3	RONDELLA	RONDELLE	WASHER	SCHEIBE	ARANDELLA
	2160.23925	4	GRANO	BOULON DE CENTRAGE	DOWEL BOLT	ZENTRIERSTIFT	PERNO DE CENTRAJE
	2160.23929	2	GRANO	BOULON DE CENTRAGE	DOWEL BOLT	ZENTRIERSTIFT	PERNO DE CENTRAJE
	2340.32336	1	GUARNIZIONE	JOINT D ETANCHEITE	SEAL	DICHTUNG	GUARNICION
	2340.32349	1	GUARNIZIONE	JOINT D ETANCHEITE	SEAL	DICHTUNG	GUARNICION
	2360.31504	1	TAPPO	BOUCHON FILETE	THREAD PLUG	GEWINDESTOPFEN	TAPON ROSCADO
	2360.31581	3	TAPPO	BOUCHON FILETE	THREAD PLUG	GEWINDESTOPFEN	TAPON ROSCADO

BOULONNERIE DU BLOC-CYLINDRES
CYLINDER BLOCK HARDWARE
SCHRAUBEN UND MUTTERN FÜR KURBELGEHÄUSE
TORNILLERIA DEL BASAMENTO

TAV. 01.02

1ª	EDIZIONE	9	7	4	APRILE
1st	EDITION				APRIL
1e	EDITION				APRIL
1.	AUSGABE				APRIL
1ª	EDICION				ABRIL

DATA EDIZIONE AGGIORNAMENTO

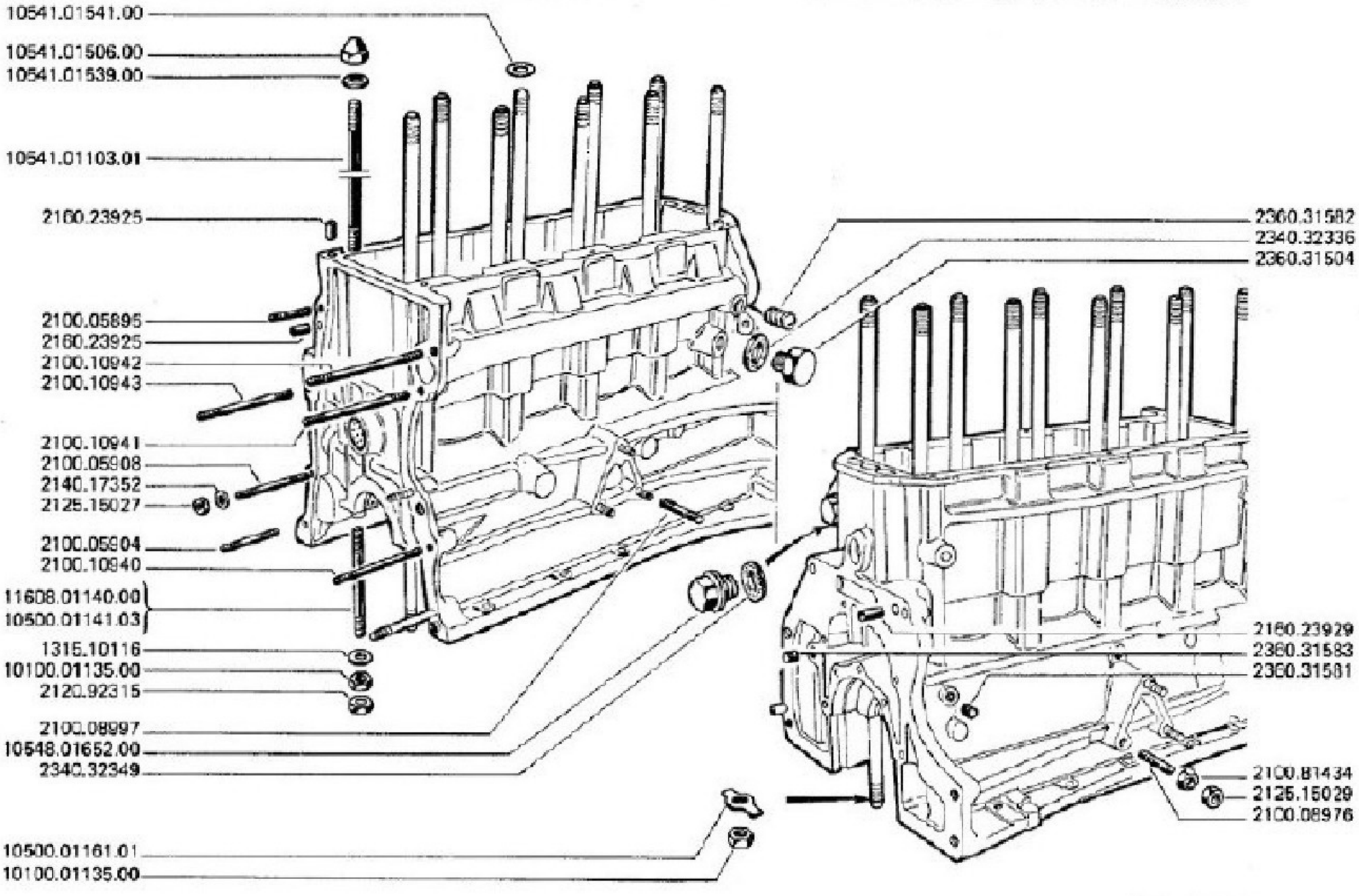

TAV. 01.027.0

BULLONERIA DEL BASAMENTO
BOULONNERIE DU BLOC-CYLINDRES
CYLINDER BLOCK HARDWARE
SCHRAUBEN UND MUTTERN FUR KURBELGEHAUSE
TORNILLERIA DEL BASAMENTO

MODIFICA	N. ORDINAZIONE	QT.	DENOMINAZIONE	DESIGNATION	DESCRIPTION	BENENNUNG	DENOMINACIONES
	2360.31582	1	TAPPO	BOUCHON FILETE	THREAD PLUG	GEWINDESTOPFEN	TAPON ROSCADO
	2360.31583	1	TAPPO	BOUCHON FILETE	THREAD PLUG	GEWINDESTOPFEN	TAPON ROSCADO
	10100.01135.00	10	DADO	ECROU	NUT	MUTTER	TUERCA
	10500.01141.03	8	PRIGIONIERO MM.124	GOUJON	STUD	STIFTSCHRAUBE	PRISIONERO
	10500.01161.01	2	PIASTRINA	PLAQUETTE FREIN	LOCKPLATE	SICHERUNGSBLECH	PLACA DE FRENO
	10541.01103.01	10	PRIGIONIERO	GOUJON	STUD	STIFTSCHRAUBE	PRISIONERO
	10541.01506.00	10	DADO	ECROU	NUT	MUTTER	TUERCA
	10541.01539.00	8	RONDELLA	RONDELLE	WASHER	SCHEIBE	ARANDELLA
	10541.01541.00	2	RONDELLA	RONDELLE	WASHER	SCHEIBE	ARANDELLA
	10548.01652.00	1	TAPPO	BOUCHON FILETE	THREAD PLUG	GEWINDESTOPFEN	TAPON ROSCADO
	11608.01140.00	2	PRIGIONIERO	GOUJON	STUD	STIFTSCHRAUBE	PRISIONERO

CARTER DE DISTRIBUTION
FRONT CRANKCASE COVER
DECKEL FÜR KURBELGEHÄUSE
TAPA ANTERIOR DEL BASAMENTO

TAV. 01.04

1ª	EDIZIONE	1974	APRILE
1st	EDITION		APRIL
1e	EDITION		APRIL
1.	AUSGABE		APRIL
1ª	EDICION		APRIL

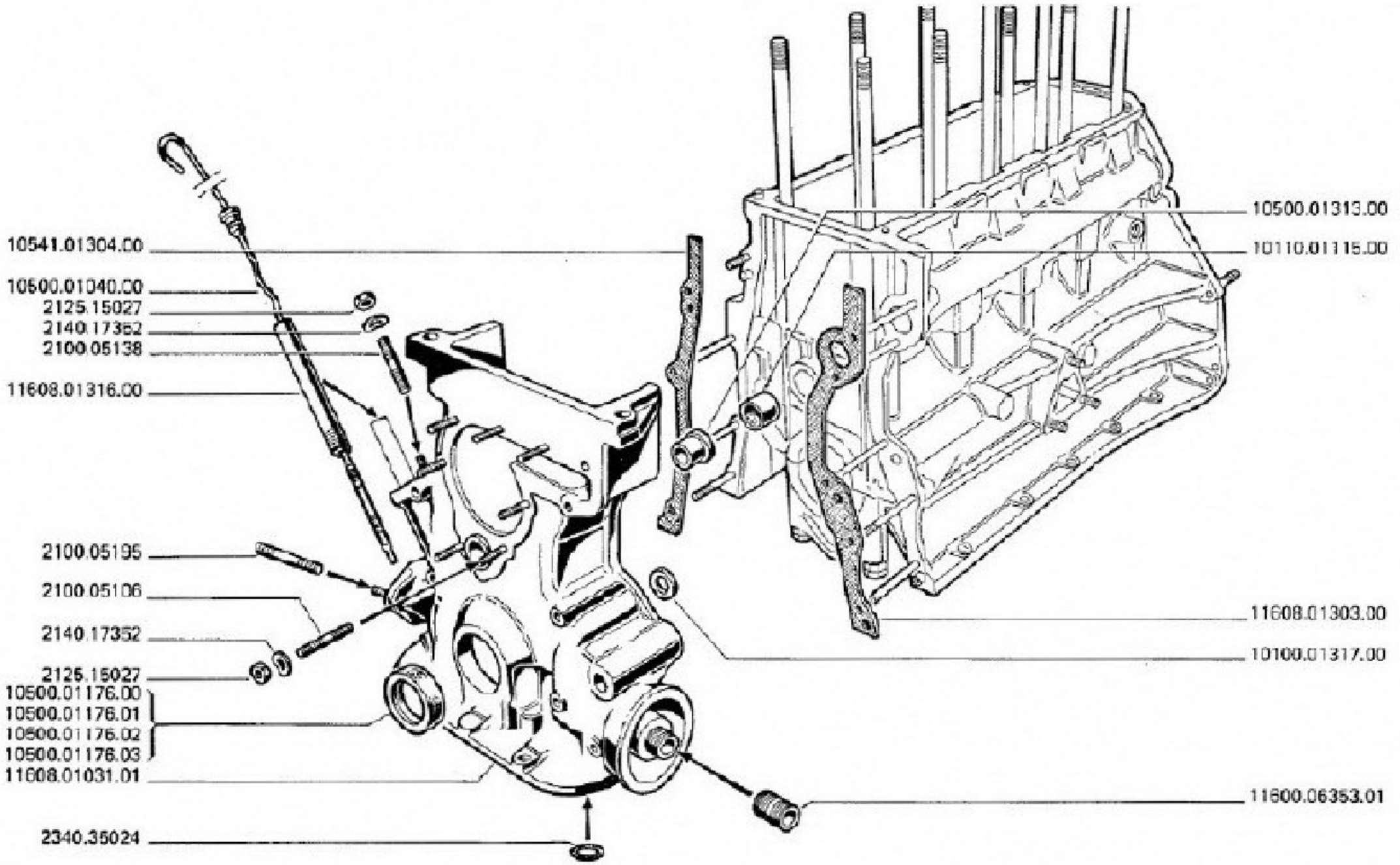

TAV. 01.04/0

COPERCHIO ANTERIORE BASAMENTO
CARTER DE DISTRIBUTION
FRONT CRANKCASE COVER
DECKEL FUR KURBELGEHAUSE
TAPA ANTERIOR DEL BASAMENTO

MODIFICA	N. ORDINAZIONE		QT.	DENOMINAZIONE	DESIGNATION	DESCRIPTION	BENENNUNG	DENOMINACIONES
	2100.05106		7	PRIGIONIERO	GOUJON	STUD	STIFTSCHRAUBE	PRISIONERO
	2100.05138		1	PRIGIONIERO	GOUJON	STUD	STIFTSCHRAUBE	PRISIONERO
	2100.05195		2	PRIGIONIERO	GOUJON	STUD	STIFTSCHRAUBE	PRISIONERO
	2125.15027		8	DADO	ECROU	NUT	MUTTER	TUERCA
	2140.17352		8	RONDELLA	RONDELLE	WASHER	SCHEIBE	ARANDELLA
	2340.35024		1	GUARNIZIONE	JOINT D ETANCHEITE	SEAL	DICHTUNG	GUARNICION
	10100.01317.00		1	GUARNIZIONE	JOINT D ETANCHEITE	SEAL	DICHTUNG	GUARNICION
	10110.01115.00		1	BOCCOLA	BAGUE	BUSHING	BUECHSE	CASQUILLO
	10500.01040.00		1	ASTA LIVELLO OLIO	JAUGE	LEVEL ROD	MESSTAB	VARILLA DE NIVEL
	10500.01176.00	*	1	ANELLO TENUTA	JOINT	SEAL	DICHTRING	JUNTA
	10500.01176.01	*	1	ANELLO TENUTA	JOINT	SEAL	DICHTRING	JUNTA
	10500.01176.02	*	1	ANELLO TENUTA	JOINT	SEAL	DICHTRING	JUNTA
	10500.01176.03	*	1	ANELLO TENUTA	JOINT	SEAL	DICHTRING	JUNTA
	10500.01313.00		1	BOCCOLA	BAGUE	BUSHING	BUECHSE	CASQUILLO
	10541.01304.00		1	GUARNIZIONE	JOINT	GASKET	DICHTUNG	JUNTA
	11600.06353.01		1	RACCORDO	RACCORD	UNION	VERTEILER	RACOR
	11608.01091.01		1	COPERCHIO	CACHE ARBRES A CAMES	CAMSHAFT COVER	STEUERGEHAUSEDECKEL	CUBIERTA DISTRIBUCIO
	11608.01303.00		1	GUARNIZIONE	JOINT D ETANCHEITE	SEAL	DICHTUNG	GUARNICION
	11608.01316.00		1	PROLUNGA	PROLONGE	EXTENSION	ANSCHLUSSTUECK	PROLONGACION

* ALTERNATIVA ALTERNATIVE ALTERNATIVE WAHLWEISE ALTERNATIVA

CARTER ARRIERE MOTEUR
CRANKCASE REAR COVER
DECKEL FÜR KURBELGEHÄUSE
TAPA POSTERIOR DEL BASAMENTO

1ª EDIZIONE 1ère EDITION 1st EDITION 1. AUSGABE 1ra EDICION — 1974 — APRILE AVRIL APRIL APRIL ABRIL

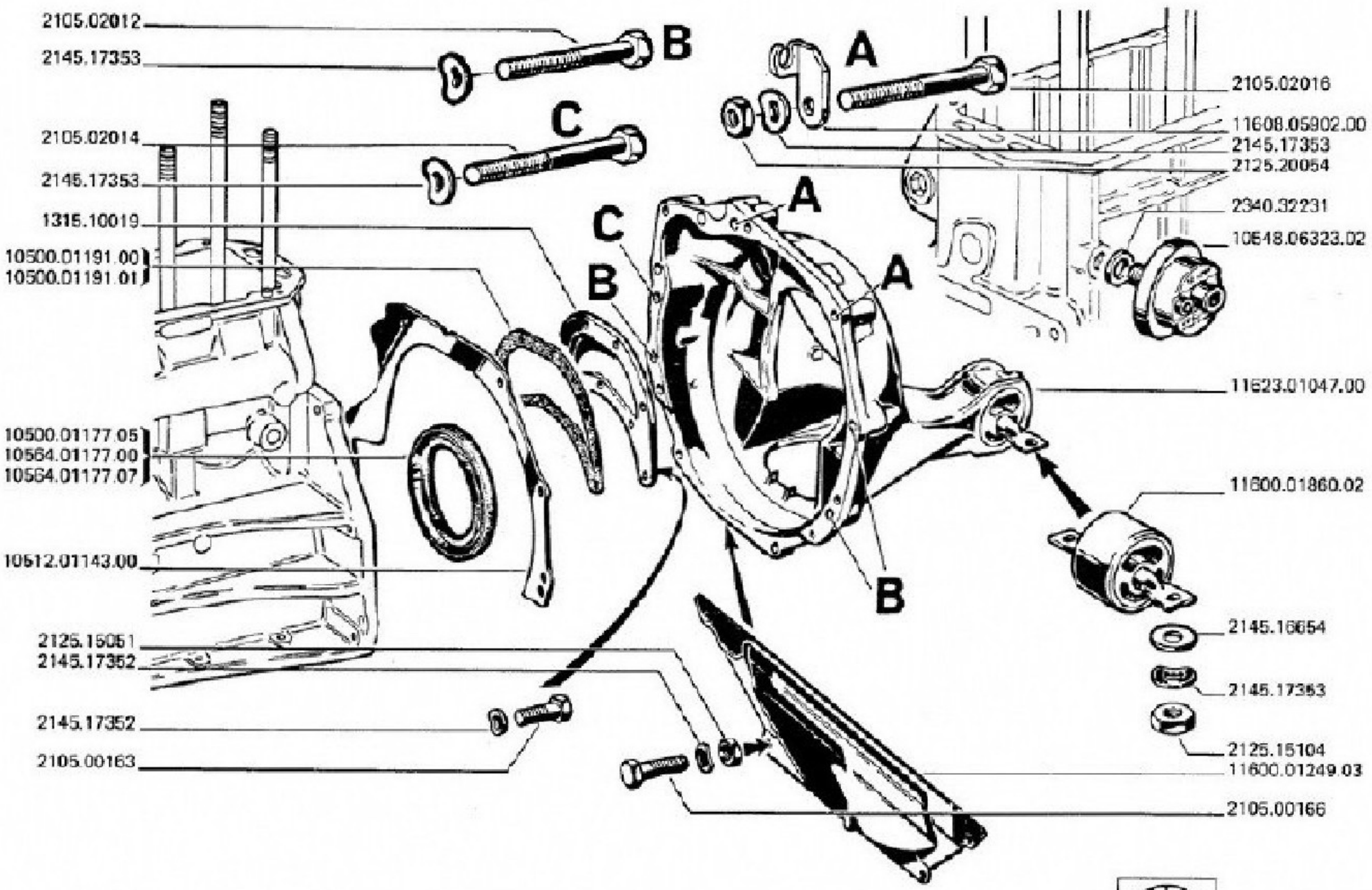

TAV. 01.06/0

COPERCHIO POSTERIORE BASAMENTO
CARTER ARRIERE MOTEUR
CRANKCASE REAR COVER
DECKEL FUR KURBELGEHAUSE
TAPA POSTERIOR DEL BASAMENTO

MODIFICA	N. ORDINAZIONE		QT.	DENOMINAZIONE	DESIGNATION	DESCRIPTION	BENENNUNG	DENOMINACION
	1315.10019		1	COPERCHIO	COUVERCLE	COVER	DECKEL	TAPA
	2105.00163		9	VITE	VIS	SCREW	SCHRAUBE	TORNILLO
	2105.00166		4	VITE	VIS	SCREW	SCHRAUBE	TORNILLO
	2105.02012		3	VITE	VIS	SCREW	SCHRAUBE	TORNILLO
	2105.02014		1	VITE	VIS	SCREW	SCHRAUBE	TORNILLO
	2105.02016		2	VITE	VIS	SCREW	SCHRAUBE	TORNILLO
	2125.15051		4	DADO	ECROU	NUT	MUTTER	TUERCA
	2125.15104		2	DADO	ECROU	NUT	MUTTER	TUERCA
	2125.20054		2	DADO	ECROU	NUT	MUTTER	TUERCA
	2145.16454		0	RONDELLA	RONDELLE	WASHER	SCHEIBE	ARANDELLA
	2145.17352		4	RONDELLA	RONDELLE	WASHER	SCHEIBE	ARANDELLA
	2145.17353		8	RONDELLA	RONDELLE	WASHER	SCHEIBE	ARANDELLA
	2340.32231		1	GUARNIZIONE	JOINT	GASKET	DICHTUNG	JUNTA
	10500.01177.05	*	1	ANELLO TENUTA	JOINT	SEAL	DICHTRING	JUNTA
	10500.01191.00	*	1	GUARNIZIONE	JOINT D ETANCHEITE	SEAL	DICHTUNG	GUARNICION
	10500.01191.01	*	1	GUARNIZIONE	JOINT D ETANCHEITE	SEAL	DICHTUNG	GUARNICION
	10512.01143.00		1	PIASTRA	PLAQUE ENTRETOISE	DISTANCE PLATE	ZWISCHENPLATTE	PLACA SEPARADORA
	10548.06323.02		1	TRASMETT. BORLETTI	CONTACTEUR	SENDER UNIT	GEBER	TRANSMISOR
	10564.01177.00	*	1	ANELLO TENUTA	JOINT	SEAL	DICHTRING	JUNTA
	10564.01177.07	*	1	ANELLO TENUTA	JOINT	SEAL	DICHTRING	JUNTA
	11600.01249.03		1	COPERCHIETTO	COUVERCLE	COVER	DECKEL	TAPA

COPERCHIO POSTERIORE BASAMENTO
CARTER ARRIERE MOTEUR
CRANKCASE REAR COVER
DECKEL FÜR KURBELGEHÄUSE
TAPA POSTERIOR DEL BASAMENTO

TAV. 01.06

1ª	EDIZIONE	1°	APRILE
1st	EDITION		APRIL
1e	EDITION	97	APRIL
1.	AUSGABE		APRIL
1ª	EDICION	1	ABRIL

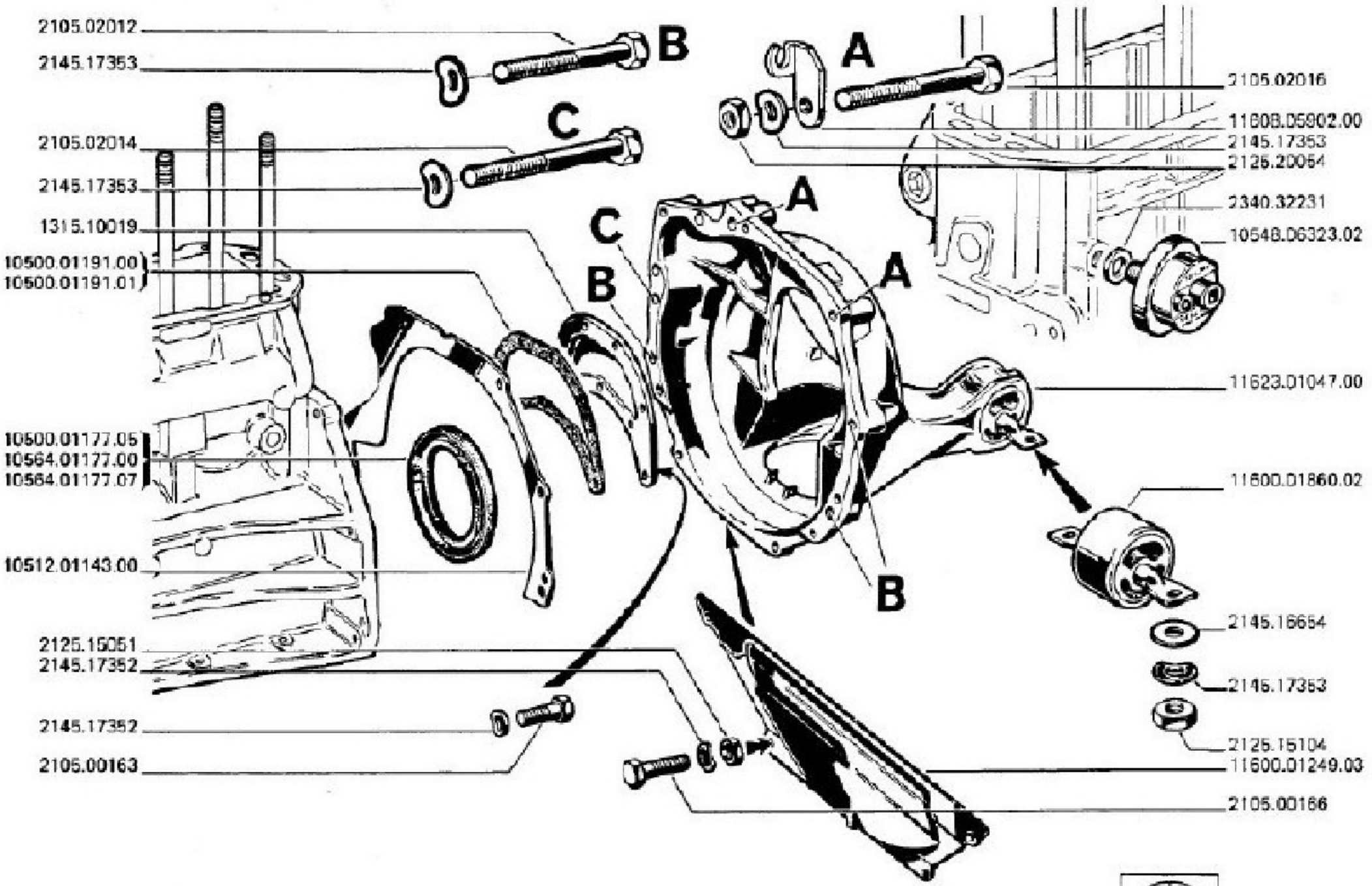

TAV. 01.06/0

COPERCHIO POSTERIORE BASAMENTO
CARTER ARRIERE MOTEUR
CRANKCASE REAR COVER
DECKEL FUR KURBELGEHAUSE
TAPA POSTERIOR DEL BASAMENTO

MODIFICA	N. ORDINAZIONE	QT.	DENOMINAZIONE	DÉSIGNATION	DESCRIPTION	BENENNUNG	DENOMINACIONES
	11600.01860.02	1	SILENTBLOC	SILENTBLOC	SILENTBLOCK	SILENTBLOCK	SILENTBLOC
	11608.05902.00	2	PIASTRINA	PLAQUETTE	PLATE	PLAETTCHEN	PLAQUITA
	11623.01047.00	1	COPERCHIO	COUVERCLE	COVER	DECKEL	TAPA

* ALTERNATIVA ALTERNATIVE ALTERNATIVE WAHLWEISE ALTERNATIVA

TESTA CILINDRI
CULASSE
CYLINDER HEAD
ZYLINDERKOPF
CULATA

TAV. 01.08

1ª	EDIZIONE	974	APRILE
1st	EDITION		APRIL
1re	EDITION		APRIL
1.	AUSGABE		APRIL
1ª	EDICION		ABRIL

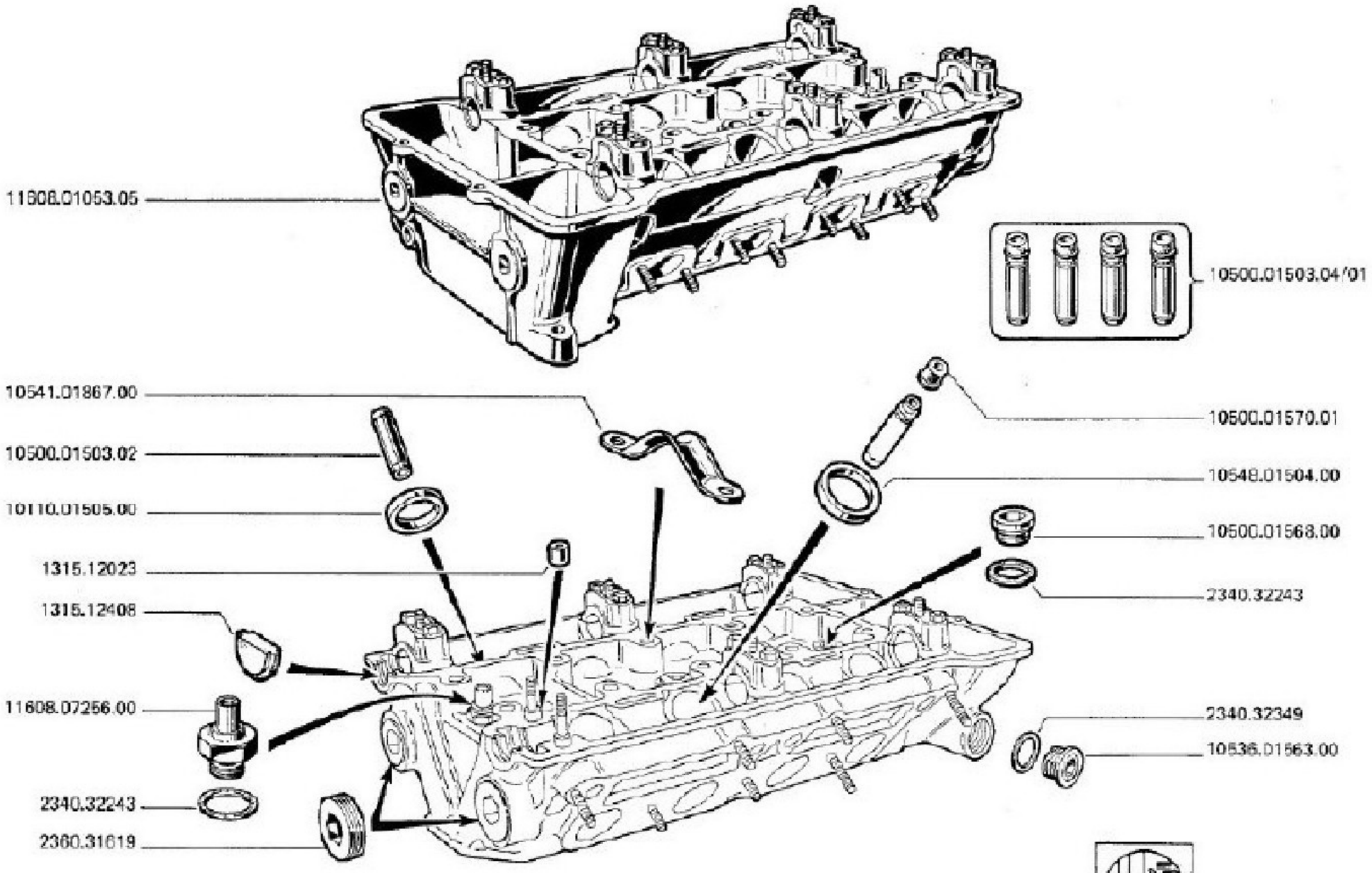

TAV. 01.08/0

TESTA CILINDRI
CULASSE
CYLINDER HEAD
ZYLINDERKOPF
CULATA

MODIFICA	N. ORDINAZIONE	QT	DENOMINAZIONE	DESIGNATION	DESCRIPTION	BENENNUNG	DENOMINACIONES
	1315.12023	12	BOCCOLA	BAGUE	BUSHING	BUECHSE	CASQUILLO
	1315.12408	2	GUARNIZIONE	JOINT D ETANCHEITE	SEAL	DICHTUNG	GUARNICION
	2340.32243	5	GUARNIZIONE	JOINT D ETANCHEITE	SEAL	DICHTUNG	GUARNICION
	2340.32349	1	GUARNIZIONE	JOINT D ETANCHEITE	SEAL	DICHTUNG	GUARNICION
	2360.31619	2	TAPPO	BOUCHON FILETE	THREAD PLUG	GEWINDESTOPFEN	TAPON ROSCADO
	10110.01505.00	4	SEDE VALVOLA SCAR	SIEGE DE SOUPAPE	VALVE SEAT	VENTILSITZ	SEDE VALVULA
	10500.01503.02	4	GUIDAVALVOLA SCAR.	GUIDE DE SOUPAPE	VALVE GUIDE	VENTILFUEHRUNG	GUIA VALVULA
	10500.01503.04/01	1	SR GUIDAVALVOLE ASP.	COL.GUIDES SOUPAPES	SET OF VALVE GUIDES	SATZ VENTILFUHRUNGEN	SERIE GUIA VALVULAS
	10500.01568.00	4	TAPPO	BOUCHON FILETE	THREAD PLUG	GEWINDESTOPFEN	TAPON ROSCADO
	10500.01570.01	4	CAPPUCCIO	CAPUCHON	BOOT	KAPPE	CAPUCHON
	10536.01563.00	1	TAPPO	BOUCHON FILETE	THREAD PLUG	GEWINDESTOPFEN	TAPON ROSCADO
	10541.01867.00	1	CAVALLOTTO	CAVALIER	LIFT BRACKET	LAGERBOCK	CABALLETTE
	10548.01504.00	4	SEDE VALVOLA ASP	SIEGE DE SOUPAPE	VALVE SEAT	VENTILSITZ	SEDE VALVULA
	11608.01053.05	1	TESTA CILINDRI	CULASSE	CYLINDER HEAD	ZYLINDERKOPF	CABEZA CILINDROS
	11608.07256.00	1	INT.TERMOMETRICO	COMMUTAT.ELECTROMAGN	SOLENOID	MAGNETSCHALTER	INTERRUPTOR MAGNETIC

DETAIL DE LA CULASSE
CYLINDER HEAD DETAILS
ZYLINDERKOPF-EINZELTEILE
PIEZAS DE LA CULATA

TAV. 01.09

1ª	EDIZIONE	APRILE	1974
1st	EDITION	APRIL	
1re	EDITION	APRIL	
1.	AUSGABE	APRIL	
1ª	EDICION	APRIL	

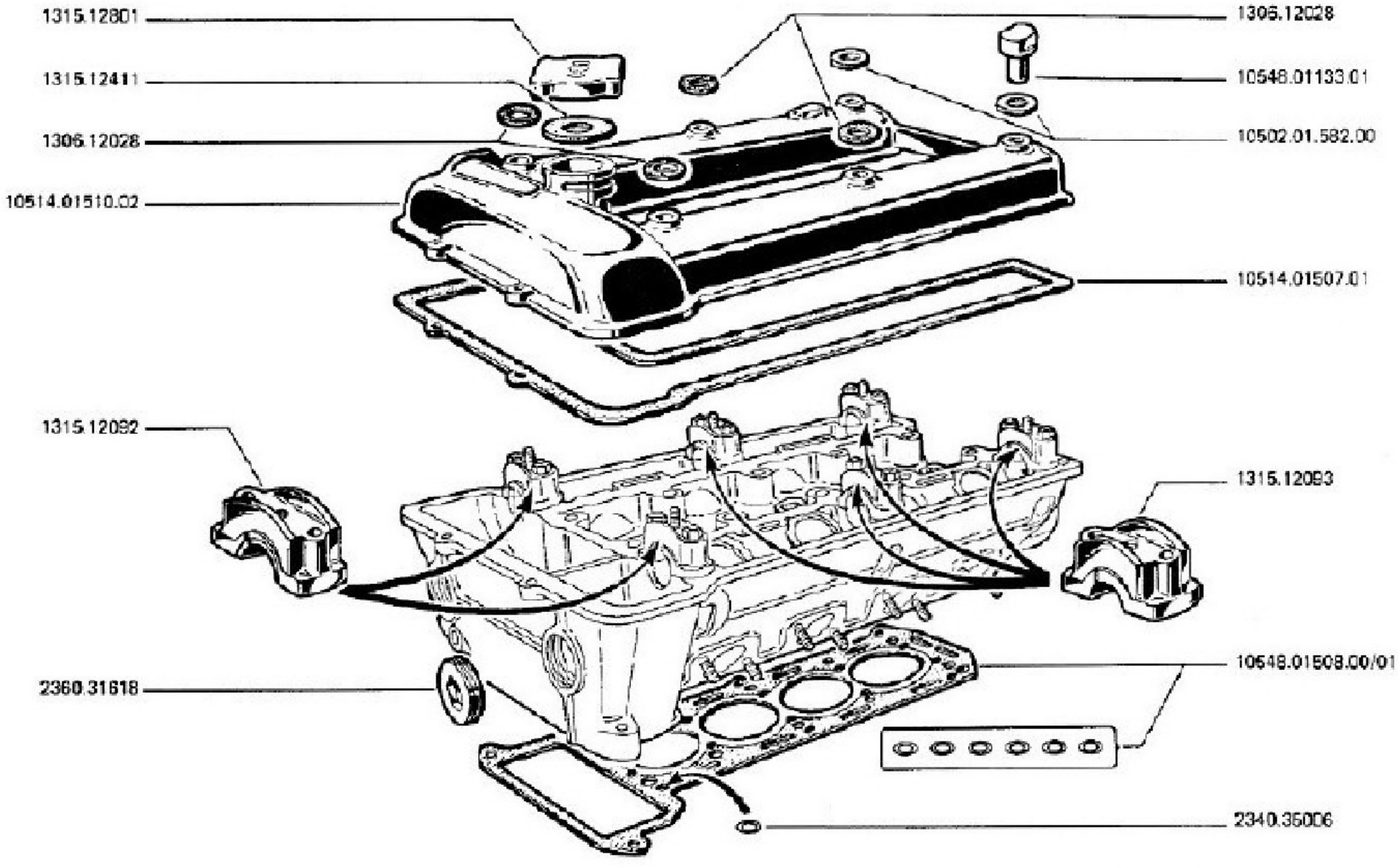

TAV. 01.09/0

PARTICOLARI TESTA CILINDRI
DETAIL DE LA CULASSE
CYLINDER HEAD DETAILS
ZYLINDERKOPF-EINZELTEILE
PIEZAS DE LA CULATA

MODIFICA	N. ORDINAZIONE	QT.	DENOMINAZIONE	DESIGNATION	DESCRIPTION	BENENNUNG	DENOMINACIONES
	1306.12028	4	GUARNIZIONE	JOINT D ETANCHEITE	SEAL	DICHTUNG	GUARNICION
	1315.12092	2	SUPPORTO ANT.	SUPPORT	SUPPORT	LAGERUNG	SOPORTE
	1315.12093	4	SUPPORTO POST.	SUPPORT	SUPPORT	LAGERUNG	SOPORTE
	1315.12411	1	GUARNIZIONE	JOINT D ETANCHEITE	SEAL	DICHTUNG	GUARNICION
	1315.12801	1	TAPPO	BOUCHON	PLUG	VERSCHLUSSCHRAUBE	TAPON
	2340.35006	6	GUARNIZIONE	JOINT D ETANCHEITE	SEAL	DICHTUNG	GUARNICION
	2360.31618	2	TAPPO	BOUCHON FILETE	THREAD PLUG	GEWINDESTOPFEN	TAPON ROSCADO
	10502.01582.00	2	RONDELLA	RONDELLE	WASHER	SCHEIBE	ARANDELA
	10514.01507.01	1	GUARNIZIONE	JOINT DE CULASSE	CYLINDER HEAD GASKET	ZYLINDERKOPFDICHTUNG	JUNTA DE CULATA
	10514.01510.02	1	COPERCHIO	COUVRE-CULASSE	CYLINDER HEAD COVER	ZYLINDERKOPFHAUBE	TAPA DE CULATA
	10548.01133.01	6	POMELLO	BOUTON	KNOB	KNOPF	LLAVE
	10548.01508.00/01	1	GR GUARNIZIONI	COLLECTION DE JOINTS	SEAL KIT	GRUPPE DICHTUNGEN	GRUPO GUARNICIONES

BULLONERIA TESTA CILINDRI
BOULONNERIE DE LA CULASSE
CYLINDER HEAD HARDWARE
SCHRAUBEN UND MUTTERN FÜR ZYLINDERKOPF
BULONERIA DE LA CULATA

TAV. 01.10

1ª	EDIZIONE	APRILE	1974
1st	EDITION	APRIL	
1st	EDITION	APRIL	
1.	AUSGABE	APRIL	
1ª	EDICIÓN	ABRIL	

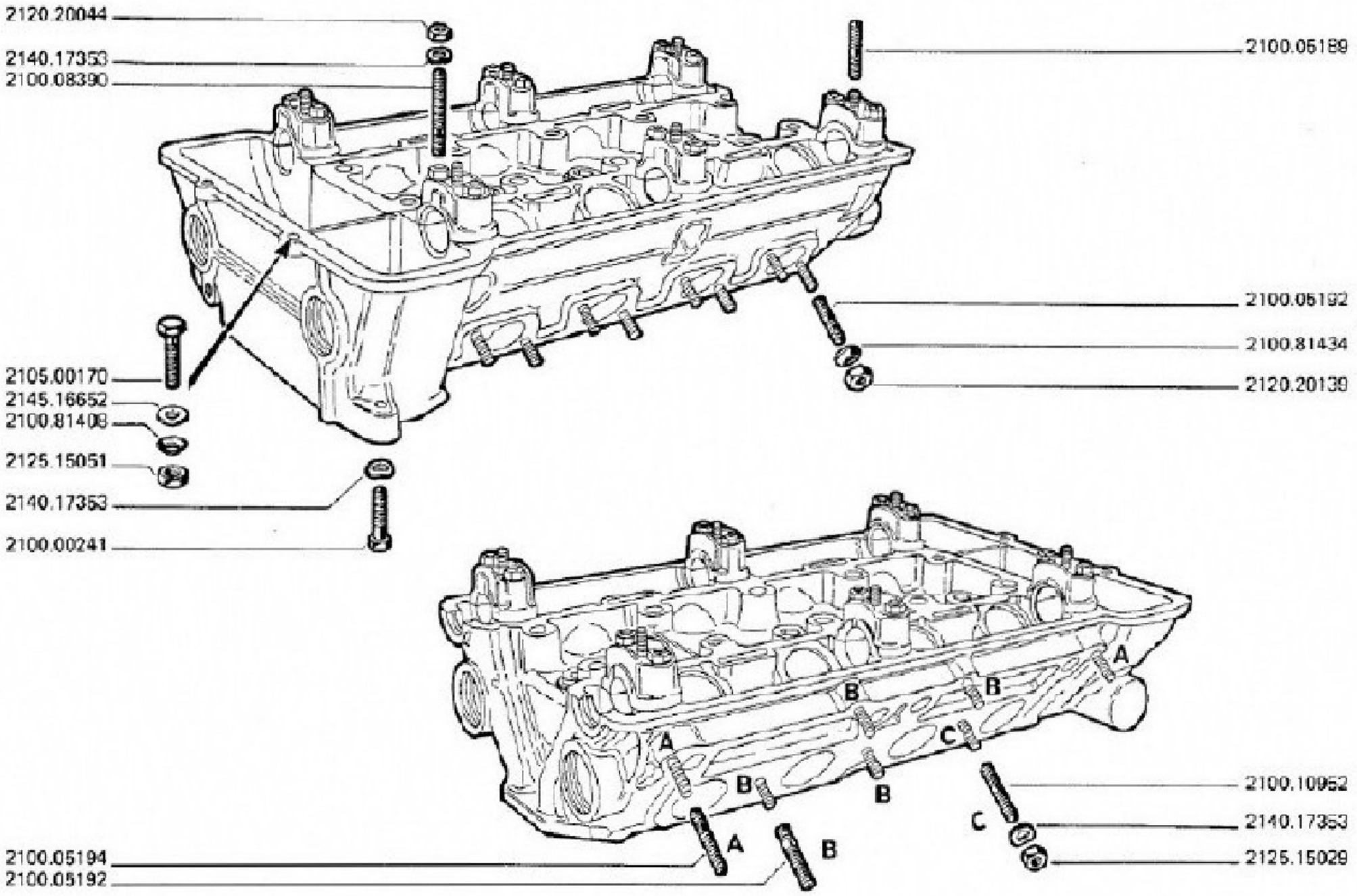

TAV. 01.1070

BULLONERIA TESTA CILINDRI
BOULONNERIE DE LA CULASSE
CYLINDER HEAD HARDWARE
SCHRAUBEN UND MUTTERN FUR ZYLINDERKOPF
BULONERIA DE LA CULATA

MODIFICA	N. ORDINAZIONE	QT.	DENOMINAZIONE	DESIGNATION	DESCRIPTION	BENENNUNG	DENOMINACIONES
	2100.00241	2	VITE	VIS	SCREW	SCHRAUBE	TORNILLO
	2100.05189	6	PRIGIONIERO	GOUJON	STUD	STIFTSCHRAUBE	PRISIONERO
	2100.05192	12	PRIGIONIERO	GOUJON	STUD	STIFTSCHRAUBE	PRISIONERO
	2100.05194	2	PRIGIONIERO	GOUJON	STUD	STIFTSCHRAUBE	PRISIONERO
	2100.08390	12	PRIGIONIERO	GOUJON	STUD	STIFTSCHRAUBE	PRISIONERO
	2100.10952	1	PRIGIONIERO	GOUJON	STUD	STIFTSCHRAUBE	PRISIONERO
	2100.81408	2	RONDELLA	RONDELLE	WASHER	SCHEIBE	ARANDELLA
	2100.81434	8	RONDELLA	RONDELLE	WASHER	SCHEIBE	ARANDELLA
	2105.00170	2	VITE	VIS	SCREW	SCHRAUBE	TORNILLO
	2120.20044	12	DADO	ECROU	NUT	MUTTER	TUERCA
	2120.20139	8	DADO	ECROU	NUT	MUTTER	TUERCA
	2125.15029	7	DADO	ECROU	NUT	MUTTER	TUERCA
	2125.15051	2	DADO	ECROU	NUT	MUTTER	TUERCA
	2140.17353	21	RONDELLA	RONDELLE	WASHER	SCHEIBE	ARANDELLA
	2145.16652	2	RONDELLA	RONDELLE	WASHER	SCHEIBE	ARANDELLA

COPPA OLIO
CARTER HUILE
OIL SUMP
ÖLWANNE
CARTER ACEITE

TAV. 01.20

1ª	EDIZIONE	1974	APRILE
1ère	EDITION		AVRIL
1st	EDITION		APRIL
-	AUSGABE		APRIL
1ª	EDICION		ABRIL

DATA AGGIORNAMENTO

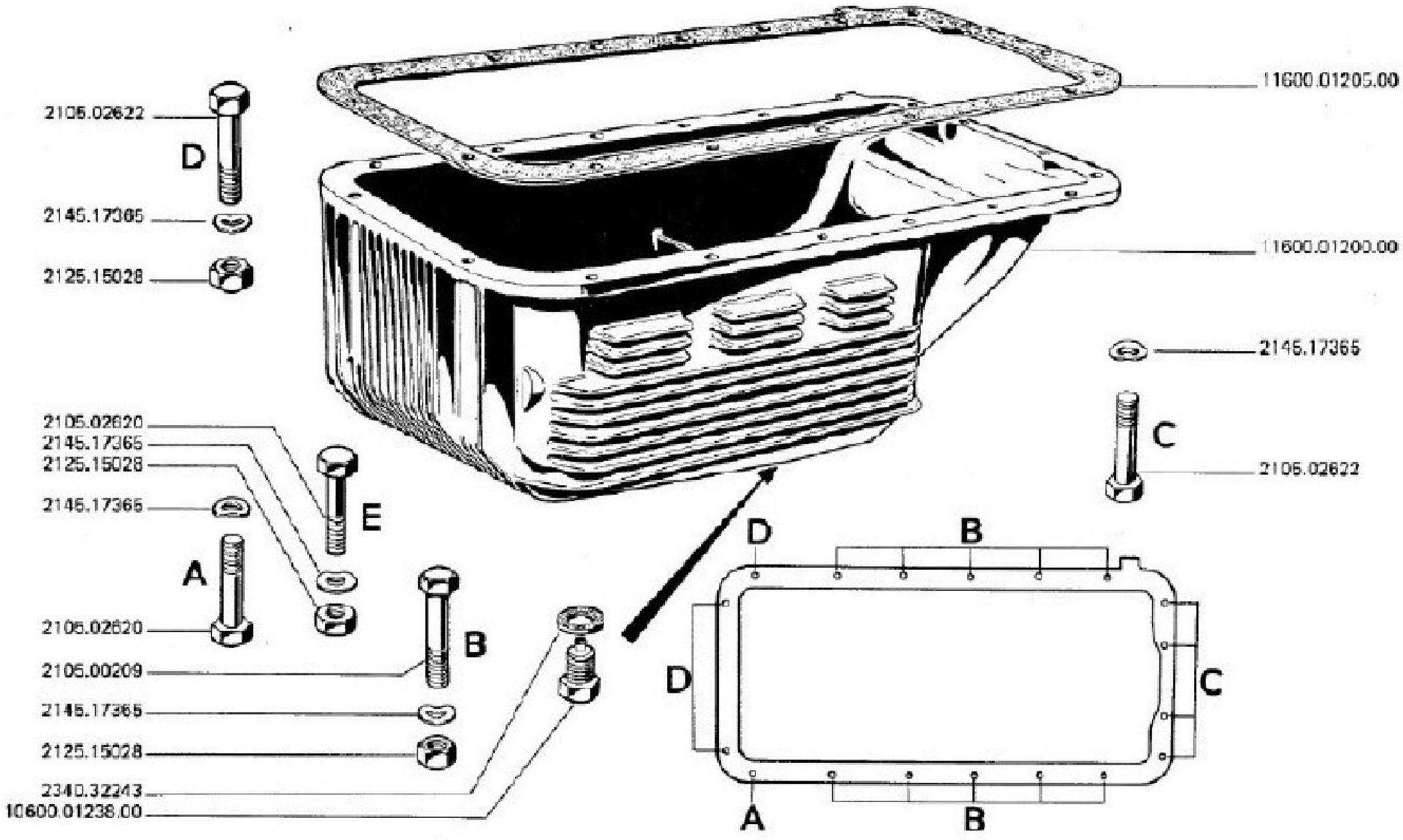

TAV. 01.20/0

COPPA OLIO
CARTER HUILE
OIL SUMP
OLWANNE
CARTER ACEITE

MODIFICA	N. ORDINAZIONE	QT.	DENOMINAZIONE	DESIGNATION	DESCRIPTION	BENENNUNG	DENOMINACIONES
	2105.00209	10	VITE	VIS	SCREW	SCHRAUBE	TORNILLO
	2105.02620	2	VITE	VIS	SCREW	SCHRAUBE	TORNILLO
	2105.02622	6	VITE	VIS	SCREW	SCHRAUBE	TORNILLO
	2125.15028	13	DADO	ECROU	NUT	MUTTER	TUERCA
	2145.17365	18	RONDELLA	RONDELLE	WASHER	SCHEIBE	ARANDELLA
	2340.32243	1	GUARNIZIONE	JOINT D ETANCHEITE	SEAL	DICHTUNG	GUARNICION
	10600.01238.00	1	TAPPO	BOUCHON DE VIDANGE	DRAIN PLUG	ABLASSTOPFEN	TAPON DE VACIADO
	11600.01200.00	1	COPPA OLIO	CARTER D HUILE	OIL SUMP	OELWANNE	COPA ACEITE
	11600.01205.00	1	GUARNIZIONE	JOINT D ETANCHEITE	SEAL	DICHTUNG	GUARNICION

PARTICOLARI ALBERO MOTORE E PISTONI
DETAIL DE L'EQUIPAGE MOBILE
COMPONENTS OF CRANKSHAFT, CON. RODS AND PISTONS
KURBELTRIEB
PIEZAS CIGUENAL Y PISTONES

TAV. 01.31

1ª EDIZIONE APRILE
1ère EDITION AVRIL
1st EDITION APRIL
1. AUSGABE APRIL
1ra EDICION ABRIL
1974

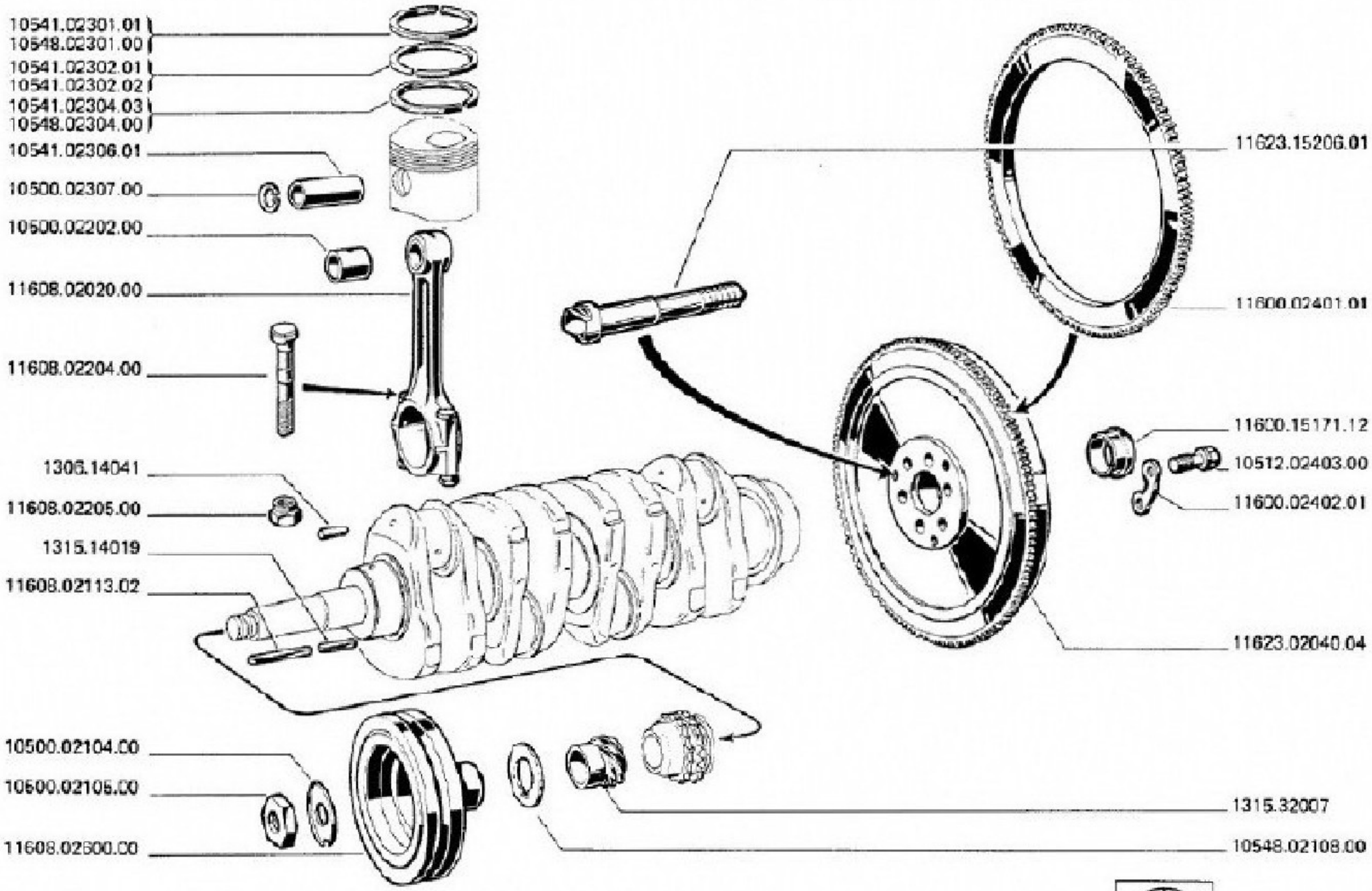

TAV. 01.31/0

PARTICOLARI ALBERO MOTORE E PISTONI
DETAIL DE L EQUIPAGE MOBILE
COMPONENTS OF CRANKSHAFT,CON.RODS AND PISTONS
KURBELTRIEB
PIEZAS CIGUENAL Y PISTONES

MODIFICA	N. ORDINAZIONE		QT.	DENOMINAZIONE	DESIGNATION	DESCRIPTION	BENENNUNG	DENOMINACION
	1306.14041		6	TAPPO	BOUCHON CONIQUE	CONICAL PLUG	KEGELSTOPFEN	TAPON CONICO
	1315.14019		1	CHIAVETTA	CLAVETTE	KEY	KEIL	CHAVETA
	1315.32007		1	INGRANAGGIO	PIGNON	GEAR	ZAHNRAD	ENGRANAJE
	10500.02104.00		1	RONDELLA	RONDELLE	WASHER	SCHEIBE	ARANDELLA
	10500.02105.00		1	DADO	ECROU	NUT	MUTTER	TUERCA
	10500.02202.00		4	BOCCOLA	BAGUE	BUSHING	BUECHSE	CASQUILLO
	10500.02307.00		8	ANELLO ELASTICO	JONC DE RETENUE	RETAINER RING	SPRENGRING	ANILLO ELASTICO
	10512.02403.00		6	VITE	VIS	SCREW	SCHRAUBE	TORNILLO
	10541.02301.01	*	1	ANELLO SUPERIORE	SEGMENT SUPERIEUR	COMPRESSION RING	KOMPRESSIONSRING	ANILLO SUPERIOR
	10541.02302.01	*	4	ANELLO INTERMEDIO	SEGMENT INTERMEDIAIR	OIL SCRAPER RING	VERDICHTUNGSRING	ANILLO INTERMEDIO
	10541.02302.02	-	4	ANELLO INTERMEDIO	SEGMENT INTERMEDIAIR	OIL SCRAPER RING	VERDICHTUNGSRING	ANILLO INTERMEDIO
	10541.02304.03	*	4	ANELLO RASCHIAOLIO	SEGMENT RACLEUR	OIL CONTROL RING	OELABSTREIFRING	ANILLO RASCA ACEITE
	10541.02306.01		4	SPINOTTO	AXE DE PISTON	GUDGEON PIN	KOLBENBOLZEN	BULON EJE DE PISTON
	10548.02108.00		1	PARAOLIO	PARE-HUILE	OIL SEAL	OELDICHTRING	GUARNIC.RETENC.ACEIT
	10548.02301.00	-	4	ANELLO SUPERIORE	SEGMENT SUPERIEUR	COMPRESSION RING	KOMPRESSIONSRING	ANILLO SUPERIOR
	10548.02304.00	-	4	ANELLO RASCHIAOLIO	SEGMENT RACLEUR	OIL CONTROL RING	OELABSTREIFRING	ANILLO RASCA ACEITE
	11600.02401.01		1	CORONA VOLANO	COURONNE DE VOLANT	STARTER RING	ZAHNKRANZ	CORONA VOLANTE
	11600.02402.01		3	PIASTRINA	PLAQUETTE	PLATE	PLAETTCHEN	PLAQUITA
	11600.15171.12		1	BOCCOLA	BAGUE	BUSHING	BUECHSE	CASQUILLO
	11608.02020.00		4	BIELLA COMPL.	BIELLE	CON. ROD	PLEUELSTANGE	BIELA
	11608.02113.02		1	CHIAVETTA	CLAVETTE	KEY	KEIL	CHAVETA

PARTICOLARI ALBERO MOTORE E PISTONI
DETAIL DE L'EQUIPAGE MOBILE
COMPONENTS OF CRANKSHAFT, CON. RODS AND PISTONS
KURBELTRIEB
PIEZAS CIGUENAL Y PISTONES

TAV. 01.31

1 EDIZIONE APRILE
EDITION AVRIL
EDITION APRIL
AUSGABE APRIL
EDICION ABRIL
1974

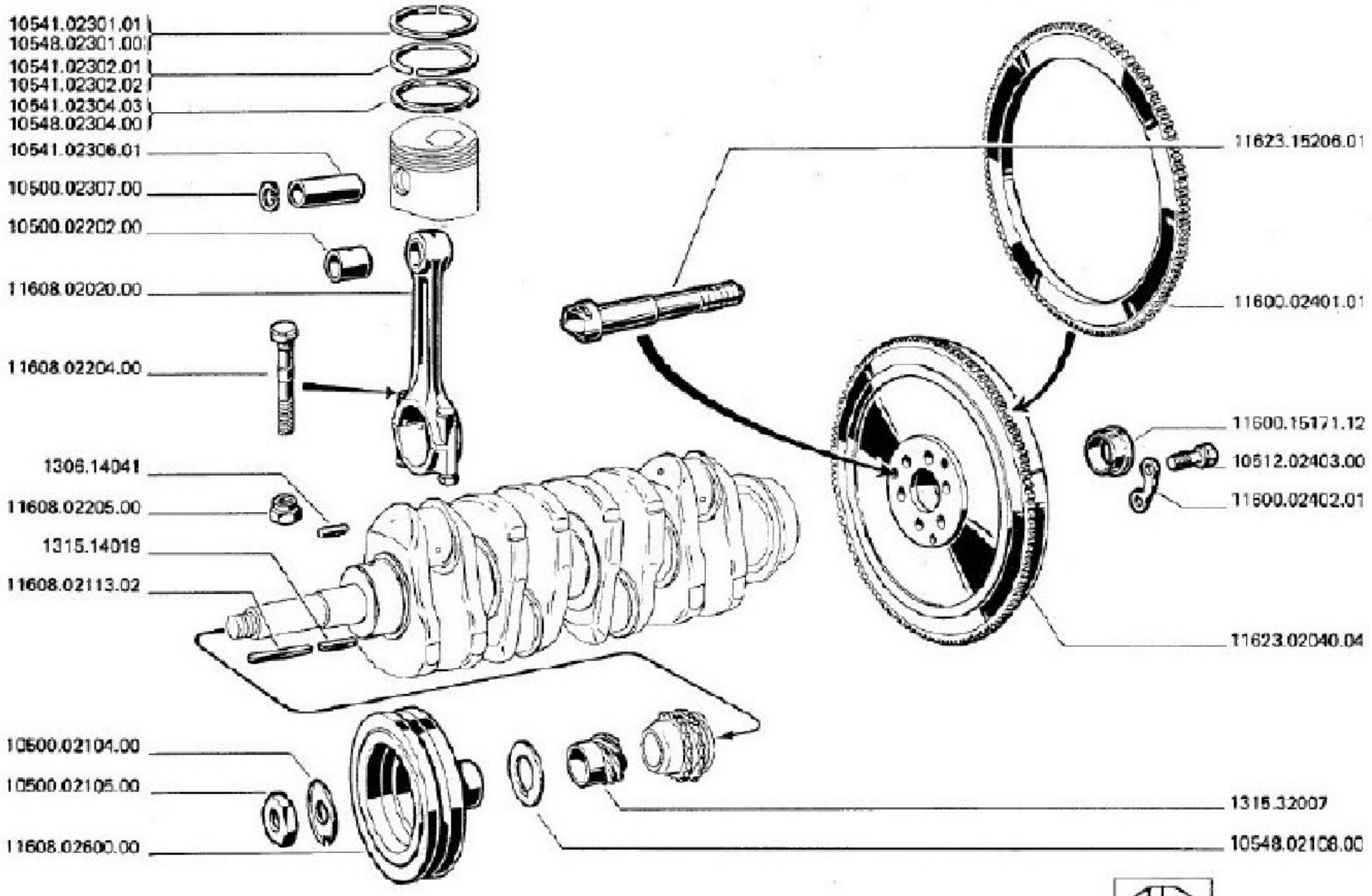

TAV. 01.31/0

PARTICOLARI ALBERO MOTORE E PISTONI
DETAIL DE L EQUIPAGE MOBILE
COMPONENTS OF CRANKSHAFT,CON.RODS AND PISTONS
KURBELTRIEB
PIEZAS CIGUENAL Y PISTONES

MODIFICA	N. ORDINAZIONE	QT.	DENOMINAZIONE	DESIGNATION	DESCRIPTION	BENENNUNG	DENOMINACIONES
	11608.02204.00	8	VITE	VIS	SCREW	SCHRAUBE	TORNILLO
	11608.02205.00	8	DADO	ECROU	NUT	MUTTER	TUERCA
	11608.02600.00	1	ANTIVIBRATORE	DAMPER	DAMPER	SCHWINGUNGSDAEMPFER	ANTIVIBRADOR
	11623.02040.04	1	VOLANO	VOLANT	FLYWHEEL	SCHWUNGRAD	VOLANTE
	11623.15206.01	3	VITE	VIS	SCREW	SCHRAUBE	TORNILLO

* PER BORGO — POUR BORGO — FOR BORGO — FUR BORGO — PARA BORGO
* PER GOETZE — POUR GOETZE — FOR GOETZE — FUR GOETZE — PARA GOETZE

GROUPE VILEBREQUIN PISTONS COUSSINETS
CRANKSHAFT, PISTONS & BEARINGS SET
KURBELTRIEB - REPARATURSATZ
GRUPO CIGUEÑAL PISTONES Y COSINETES

TAV. 01.32

1ª	EDIZIONE	APRILE	1974
1ère	EDITION	AVRIL	
1st	EDITION	APRIL	
1.	AUFLAGE	APRIL	
1era	EDICION	APRIL	

DATA DI INIZIO ACCOPPIAMENTO

	Anelli BORGO	Anelli GOETZE
BORGO	10548.02030.09	10548.02030.10
MONDIAL	10548.02030.11	10548.02030.12



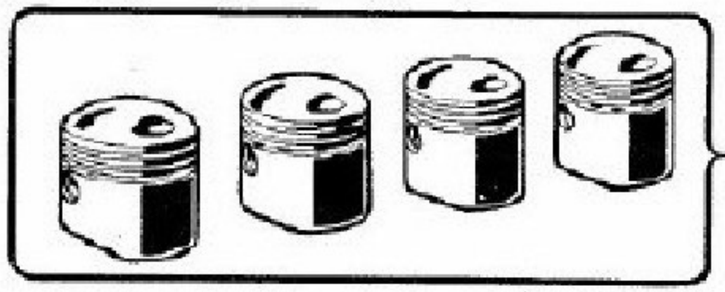

10548.02030.09/01

		Bollo blu	Bollo rosso
A	CLEVITE	10512.02232.00	10512.02232.02
	GFCM	10512.02232.01	10512.02232.03

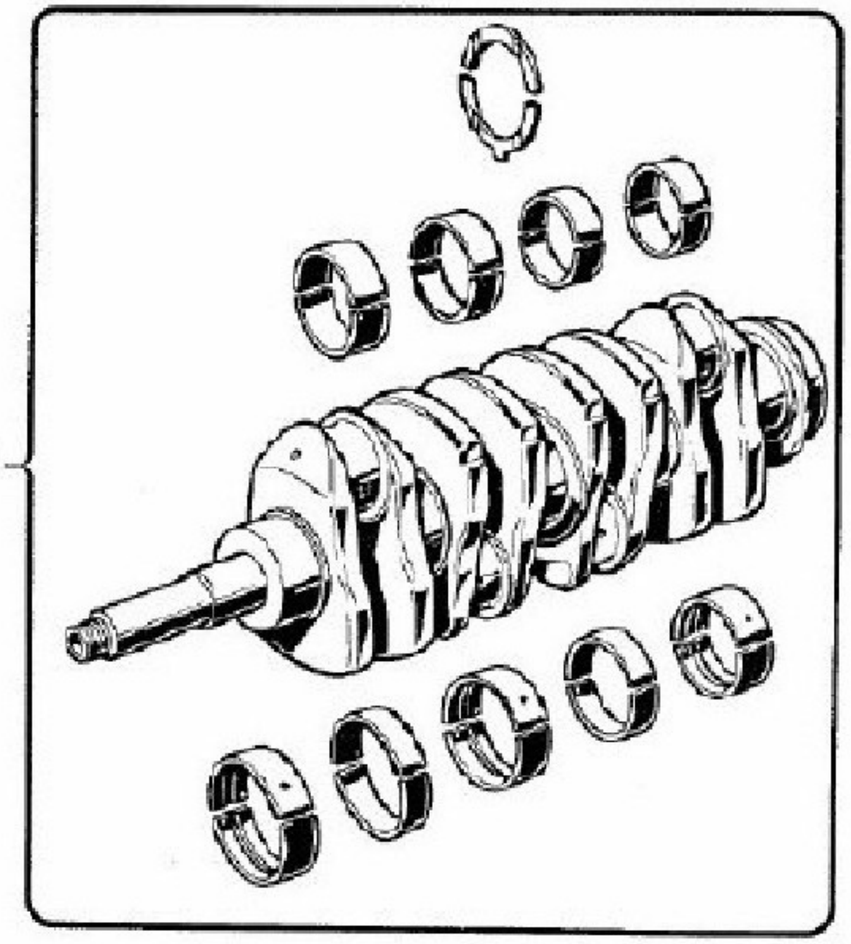

11608.02063.08

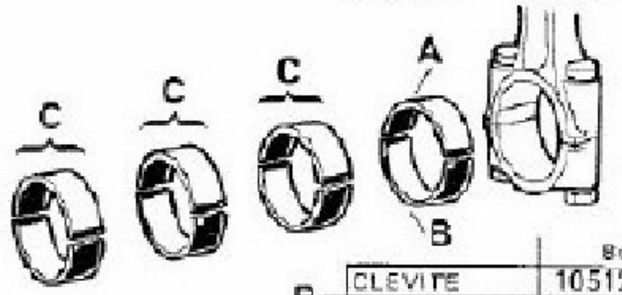

		Bollo bleu	Bollo rosso
B	CLEVITE	10512.02203.01	10512.02203.05
	SFCM	10512.02203.03	10512.02203.07

C	CLEVITE	10512.02203.00	10512.02203.04
	SFCM	10512.02203.02	10512.02203.06

D	CLEVITE	10512.02112.01	10512.02112.02
	WANDERVELL	11608.02112.04	11608.02112.03

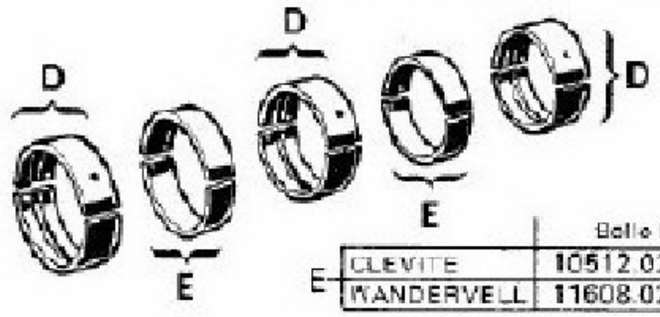

		Bollo bleu	Bollo rosso
E	CLEVITE	10512.02111.01	10512.02111.02
	WANDERVELL	11608.02111.05	11608.02111.04



11608.02106.00/01

N. 6432

TAV. 01.32/0

GRUPPO ALBERO MOTORE PISTONI E CUSCINETTI
GROUPE VILLEBREQUIN PISTONS COUSSINETS
CRANKSHAFT,PISTONS & BEARINGS SET
KURBELTRIEB-REPARATURSATZ
GRUPO CIGUENAL PISTONES Y COSINETES

MODIFICA	N ORDINAZIONE		QT.	DENOMINAZIONE	DESIGNATION	DESCRIPTION	BENENNUNG	DENOMINACIONES
	10512.02111.01	*	4	SEMICUSCINETTO BANCO	DEMI-COUSSINET	HALF BEARING	HALBLAGER	SEMICOJINETE
	10512.02111.02	-	4	SEMICUSCINETTO BANCO	DEMI-COUSSINET	HALF BEARING	HALBLAGER	SEMICOJINETE
	10512.02112.01	*	6	SEMICUSCINETTO BANCO	DEMI-COUSSINET	HALF BEARING	HALBLAGER	SEMICOJINETE
	10512.02112.02	-	6	SEMICUSCINETTO BANCO	DEMI-COUSSINET	HALF BEARING	HALBLAGER	SEMICOJINETE
	10512.02203.00	*	6	SEMICUSCINETTO BIELL	DEMI-COUSSINET	HALF BEARING	HALBLAGER	SEMICOJINETE
	10512.02203.01	*	1	SEMICUSCINETTO BIELL	DEMI-COUSSINET	HALF BEARING	HALBLAGER	SEMICOJINETE
	10512.02203.02	*	6	SEMICUSCINETTO BIELL	DEMI-COUSSINET	HALF BEARING	HALBLAGER	SEMICOJINETE
	10512.02203.03	*	1	SEMICUSCINETTO BIELL	DEMI-COUSSINET	HALF BEARING	HALBLAGER	SEMICOJINETE
	10512.02203.04	-	6	SEMICUSCINETTO BIELL	DEMI-COUSSINET	HALF BEARING	HALBLAGER	SEMICOJINETE
	10512.02203.05	-	1	SEMICUSCINETTO BIELL	DEMI-COUSSINET	HALF BEARING	HALBLAGER	SEMICOJINETE
	10512.02203.06	-	6	SEMICUSCINETTO BIELL	DEMI-COUSSINET	HALF BEARING	HALBLAGER	SEMICOJINETE
	10512.02203.07	-	1	SEMICUSCINETTO BIELL	DEMI-COUSSINET	HALF BEARING	HALBLAGER	SEMICOJINETE
	10512.02232.00	*	1	SEMICUSCINETTO BIELL	DEMI-COUSSINET	HALF BEARING	HALBLAGER	SEMICOJINETE
	10512.02232.01	*	1	SEMICUSCINETTO BIELL	DEMI-COUSSINET	HALF BEARING	HALBLAGER	SEMICOJINETE
	10512.02232.02	-	1	SEMICUSCINETTO BIELL	DEMI-COUSSINET	HALF BEARING	HALBLAGER	SEMICOJINETE
	10512.02232.03	-	1	SEMICUSCINETTO BIELL	DEMI-COUSSINET	HALF BEARING	HALBLAGER	SEMICOJINETE
	10548.02030.09		4	PISTONE BORGO	BADGE	PISTON	KOLBEN	PISTON
	10548.02030.09/01		1	SR PISTONI	COLLECTION PISTONS	SET OF PISTONS	KOLBENSATZ	SERIE PISTONES
	10548.02030.10		4	PISTONE BORGO	BADGE	PISTON	KOLBEN	PISTON
	10548.02030.11		4	PISTONE MONDIAL	BADGE	PISTON	KOLBEN	PISTON
	10548.02030.12		4	PISTONE MONDIAL	BADGE	PISTON	KOLBEN	PISTON

	Anelli BORGO	Anelli GOETZE
BORGO	10548.02030.09	10548.02030.10
MONDIAL	10548.02030.11	10548.02030.12



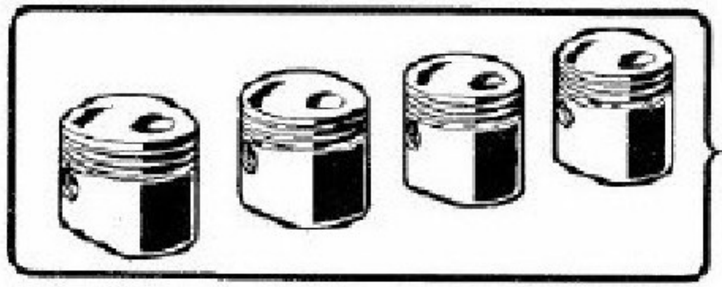

10548.02030.09/01

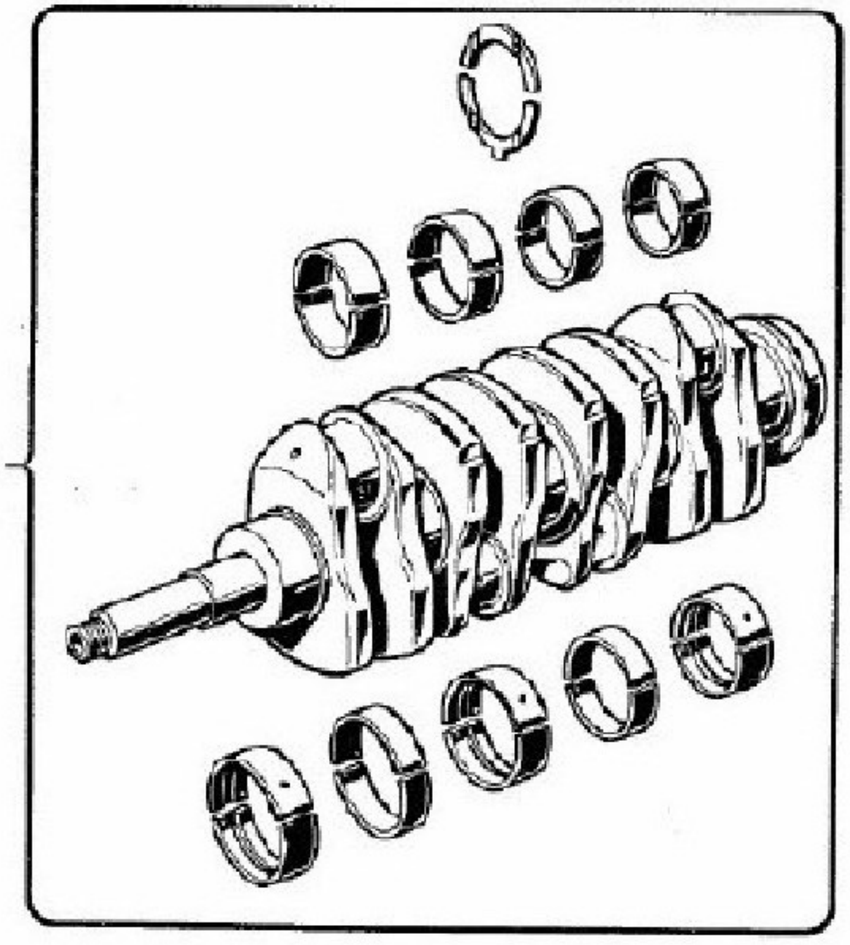

11608.02063.08

		Bollo blu	Bollo rosso
A	CLEVITE	10512.02232.00	10512.02232.02
	SFCM	10512.02232.01	10512.02232.03

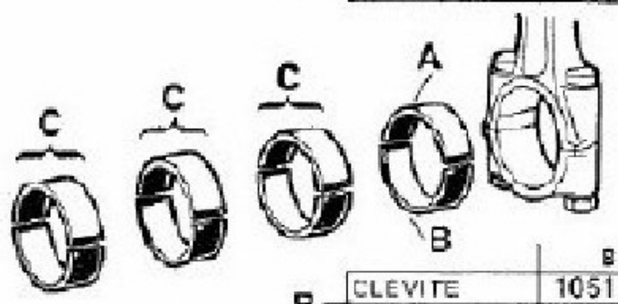

		Bollo blu	Bollo rosso
B	CLEVITE	10512.02203.01	10512.02203.05
	SFCM	10512.02203.03	10512.02203.07
C	CLEVITE	10512.02203.00	10512.02203.04
	SFCM	10512.02203.02	10512.02203.06
D	CLEVITE	10512.02112.01	10512.02112.02
	WANDERVELL	11608.02112.04	11608.02112.03

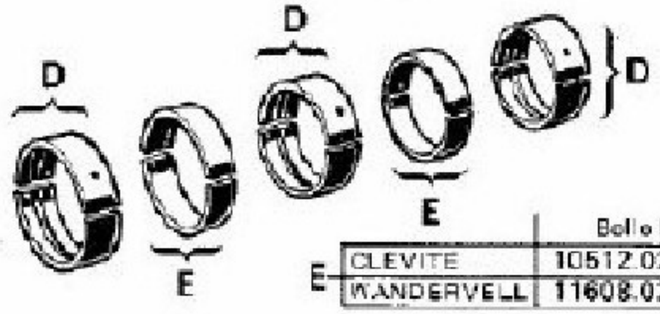

		Bollo blu	Bollo rosso
E	CLEVITE	10512.02111.01	10512.02111.02
	WANDERVELL	11608.02111.05	11608.02111.04



11608.02106.00/01

TAV. 01.32/0

GRUPPO ALBERO MOTORE PISTONI E CUSCINETTI
GROUPE VILLEBREQUIN PISTONS COUSSINETS
CRANKSHAFT,PISTONS & BEARINGS SET
KURBELTRIEB-REPARATURSATZ
GRUPO CIGUENAL PISTONES Y COSINETES

MODIFICA	N. ORDINAZIONE	QT.	DENOMINAZIONE	DÉSIGNATION	DESCRIPTION	BENENNUNG	DENOMINACIONES
	11608.02063.08	1	GR ALBERO MOTORE	COLL.EQUIPAGE MOBILE	DRIVE SHAFT ASSY	GRUPPE KURBELWELLE	GRUPO ARBOL MOTOR
	11608.02106.00/01	1	GR SEMIANELLI	SEGMENTATION	SET OF RINGS	SCHEIBENSATZ	SERIE ANILLOS
	11608.02111.04 .	4	SEMICUSCINETTO BANCO	DEMI-COUSSINET	HALF BEARING	HALBLAGER	SEMICOJINETE
	11608.02111.05 *	4	SEMICUSCINETTO BANCO	DEMI-COUSSINET	HALF BEARING	HALBLAGER	SEMICOJINETE
	11608.02112.03 .	6	SEMICUSCINETTO BANCO	DEMI-COUSSINET	HALF BEARING	HALBLAGER	SEMICOJINETE
	11608.02112.04 *	6	SEMICUSCINETTO BANCO	DEMI-COUSSINET	HALF BEARING	HALBLAGER	SEMICOJINETE

* BOLLO BLEU — REPERE BLEU — BLUE MARK — BLAUE MARKE
. BOLLO ROSSO — REPERE ROUGE — RED MARK — ROTE MARKE — MARCA ROJA

COMANDO DISTRIBUZIONE - PIGNONE COMANDO CONTAGIRI
DISTRIBUTION - PIGNON DE COMMANDE COMPTE-TOURS
VALVE TIMING GEAR - TACHOMETER DRIVING PINION
VENTILSTEUERUNG - DREHZAHLMESSER-ANTRIEBSRITZEL
MANDO DISTRIBUCION - PINON MANDO CUENTA REVOLUCIONES

TAV. 01.41

1ª	EDIZIONE	APRILE	1974
1st	EDITION	APRIL	
1re	EDITION	APRIL	
1.	AUSGABE	APRIL	
1ª	EDICION	ABRIL	

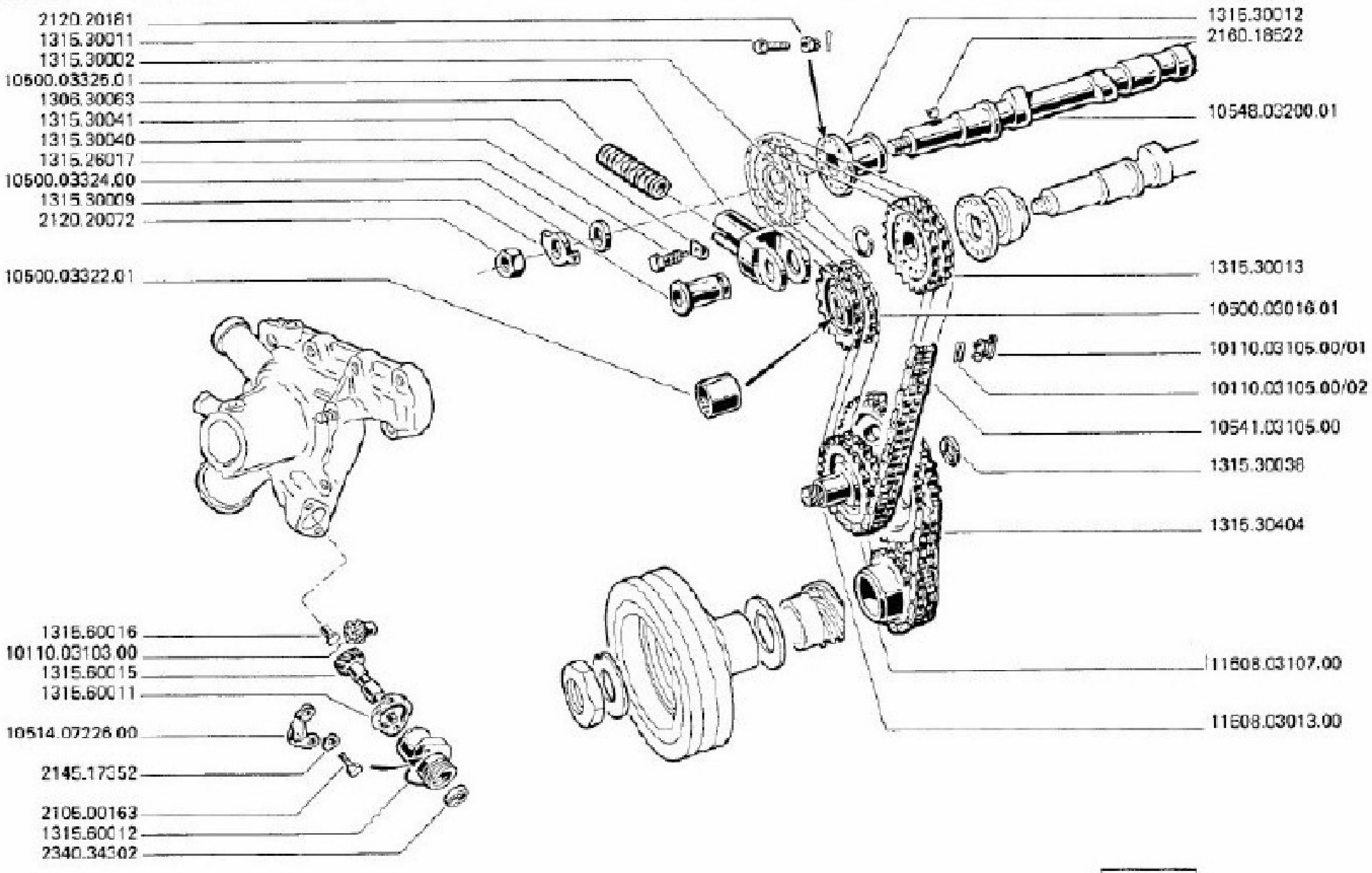

TAV. 01.41/0

COMANDO DISTRIBUZIONE - PIGNONE COMANDO CONTAGIRI
DISTRIBUTION-PIGNON DE COMMANDE-COMPTE-TOURS
VALVE TIMING GEAR - TACHOMETER DRIVING PINION
VENTILSTEUERUNG DREHZAHLMESSER - ANTRIEBSRITZEL
MANDO DISTRIBUCION - PINON MANDO CUENTA REVOLUCIONES

MODIFICA	N. ORDINAZIONE	QT.	DENOMINAZIONE	DESIGNATION	DESCRIPTION	BENENNUNG	DENOMINACIONES
	1306.30063	1	MOLLA	RESSORT HELIC.CYLIND	HELICAL SPRING	SCHRAUBENFEDER	MUELLE HELICOIDAL
	1315.26017	2	RONDELLA	RONDELLE	WASHER	SCHEIBE	ARANDELLA
	1315.30002	1	ANELLO ELASTICO	JONC DE RETENUE	RETAINER RING	SPRENGRING	ANILLO ELASTICO
	1315.30009	2	RONDELLA	RONDELLE	WASHER	SCHEIBE	ARANDELLA
	1315.30011	2	VITE	VIS	SCREW	SCHRAUBE	TORNILLO
	1315.30012	2	FLANGIA	PLATEAU ACCOUPLEMENT	CONNECTING FLANGE	FLANSCH	BRIDA DE UNION
	1315.30013	2	INGRANAGGIO	PIGNON ARBRE A CAMES	CAMSHAFT GEAR	NOCKENWELLENRAD	ENGRANAJE ARBOL LEVA
	1315.30038	1	RONDELLA RASAMENTO	RONDELLE DE REGLAGE	SHIM	AUSGLEICHSCHEIBE	ARANDELA DE AJUSTE
	1315.30040	1	VITE	VIS	SCREW	SCHRAUBE	TORNILLO
	1315.30041	1	FERMO	ARRETOIR	RETAINER	ANSCHLAG	RETEN
	1315.30404	1	CATENA	CHAINE DE DISTRIBUT.	TIMING CHAIN	STEUERKETTE	CADENA DISTRIBUCION
	1315.60011	1	GUARNIZIONE	JOINT D ETANCHEITE	SEAL	DICHTUNG	GUARNICION
	1315.60012	1	SUPPORTO	SUPPORT	SUPPORT	LAGERUNG	SOPORTE
	1315.60015	1	INGRANAGGIO	PIGNON TAILLE HELICO	HELICAL GEAR	SCHRAUBENRAD	ENGRANAJE HELICOIDAL
	1315.60016	1	NOTTOLINO	AXE	PIN	KLINKE	PESTILLO
	2105.00163	2	VITE	VIS	SCREW	SCHRAUBE	TORNILLO
	2120.20072	2	DADO	ECROU	NUT	MUTTER	TUERCA
	2120.20181	2	DADO	ECROU	NUT	MUTTER	TUERCA
	2145.17352	2	RONDELLA	RONDELLE	WASHER	SCHEIBE	ARANDELLA
	2160.18522	2	CHIAVETTA	CLAVETTE	KEY	KEIL	CHAVETA
	2340.34302	1	ANELLO TENUTA	JOINT	SEAL	DICHTRING	JUNTA

COMANDO DISTRIBUZIONE - PIGNONE COMANDO CONTAGIRI
DISTRIBUTION-PIGNON DE COMMANDE COMPTE-TOURS
VALVE TIMING GEAR - TACHOMETER DRIVING PINION
VENTILSTEUERUNG - DREHZAHLMESSER-ANTRIEBSRITZEL
MANDO DISTRIBUCION - PINON MANDO CUENTA REVOLUCIONES

TAV. 01.41

1ª	EDIZIONE	1974	APRILE
1ère	EDITION		AVRIL
1st	EDITION		APRIL
-	AUSGABE		APRIL
1ª	EDICION		ABRIL

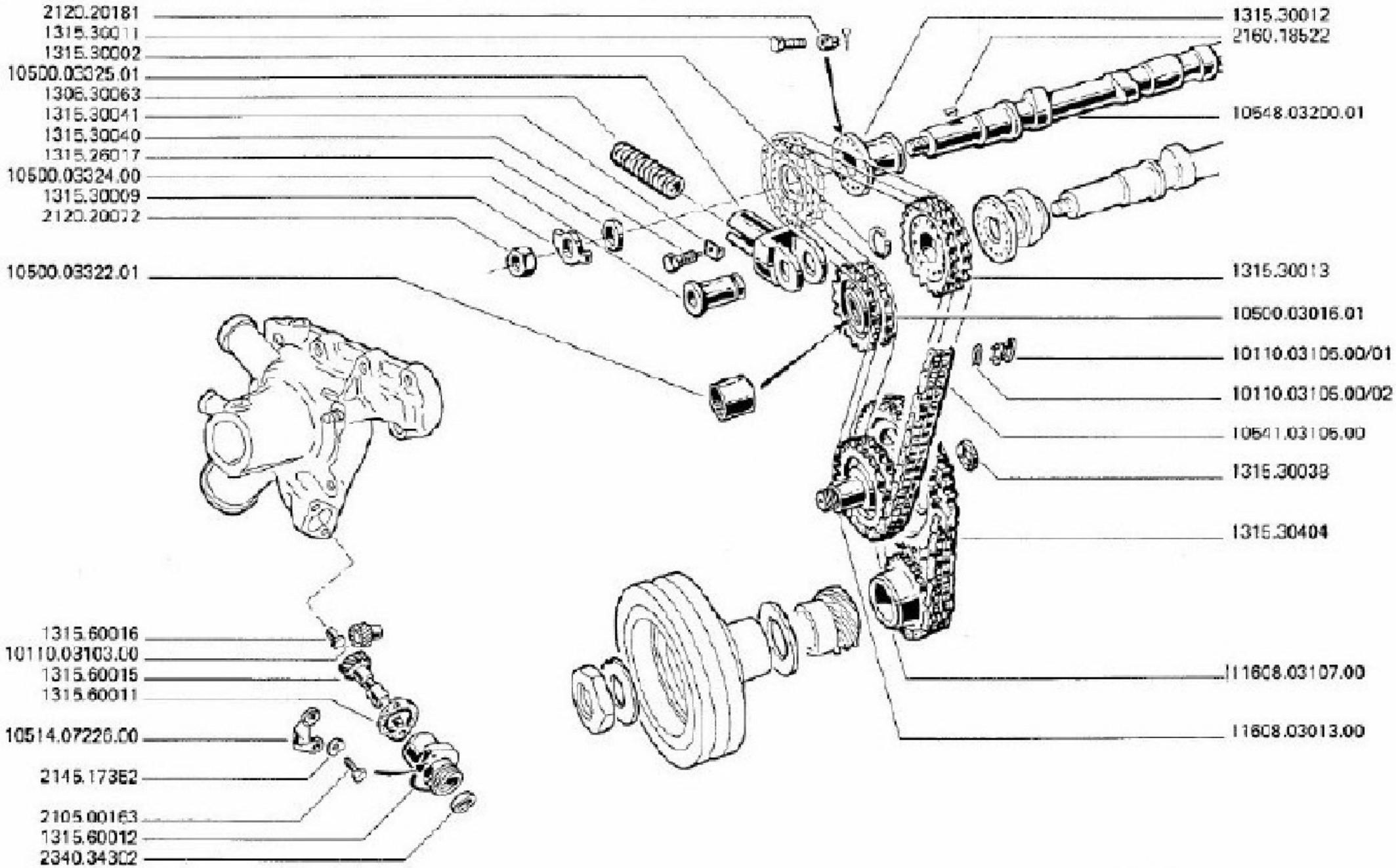

TAV. 01.41/0

COMANDO DISTRIBUZIONE - PIGNONE COMANDO CONTAGIRI
DISTRIBUTION-PIGNON DE COMMANDE-COMPTE-TOURS
VALVE TIMING GEAR - TACHOMETER DRIVING PINION
VENTILSTEUERUNG DREHZAHLMESSER - ANTRIEBSRITZEL
MANDO DISTRIBUCION - PINON MANDO CUENTA REVOLUCIONES

MODIFICA	N. ORDINAZIONE	QT.	DENOMINAZIONE	DESIGNATION	DESCRIPTION	BENENNUNG	DENOMINACIONES
	10110.03103.00	1	INGRANAGGIO	PIGNON TAILLE HELICO	HELICAL GEAR	SCHRAUBENRAD	ENGRANAJE HELICOIDAL
	10110.03105.00/01	1	MAGLIA	MAILLON DE CHAINE	CHAIN LINK	KETTENGLIED	ESLABON
	10110.03105.00/02	1	MOLLETTA	AGRAFE	CLIP	KLEMMSTUECK	MUELLECITO
	10500.03016.01	1	INGRANAGGIO	PIGNON DISTRIBUTION	DISTRIBUTION GEAR	KURBELWELLENRAD	ENGRANAJE DISTRIB.
	10500.03322.01	1	BOCCOLA	BAGUE	BEARING	LAGERBUESCHSE	CASQUILLO
	10500.03324.00	1	PERNO	AXE DE CHARNIERE	HINGE PIN	SCHARNIERSTIFT	MUNON ARTICULACION
	10500.03325.01	1	SUPPORTO	SUPPORT	SUPPORT	LAGERUNG	SOPORTE
	10514.07226.00	1	INDICATORE	INDICATEUR	LIGHT	ANZEIGER	INDICADOR
	10541.03105.00	1	CATENA	CHAINE DE DISTRIBUT.	TIMING CHAIN	STEUERKETTE	CADENA DISTRIBUCION
	10548.03200.01	2	ALBERO DISTRIBUZIONE	ARBRE A CAMES	CAMSHAFT	EXZENTERWELLE	ARBOL
	11608.03013.00	1	INGRANAGGIO DISTRIB.	PIGNON DISTRIBUTION	DISTRIBUTION GEAR	KURBELWELLENRAD	ENGRANAJE DISTRIB.
	11608.03107.00	1	PIGNONE	PIGNON ENTRAINEMENT	DRIVE PINION	ANTRIEBSRITZEL	PINON DE MANDO

1ª EDIZIONE 1ère EDITION 1st EDITION AUSGABE 1ª EDICIÓN — APRILE AVRIL APRIL APRIL ABRIL — 1974 — AGGIORNAMENTO

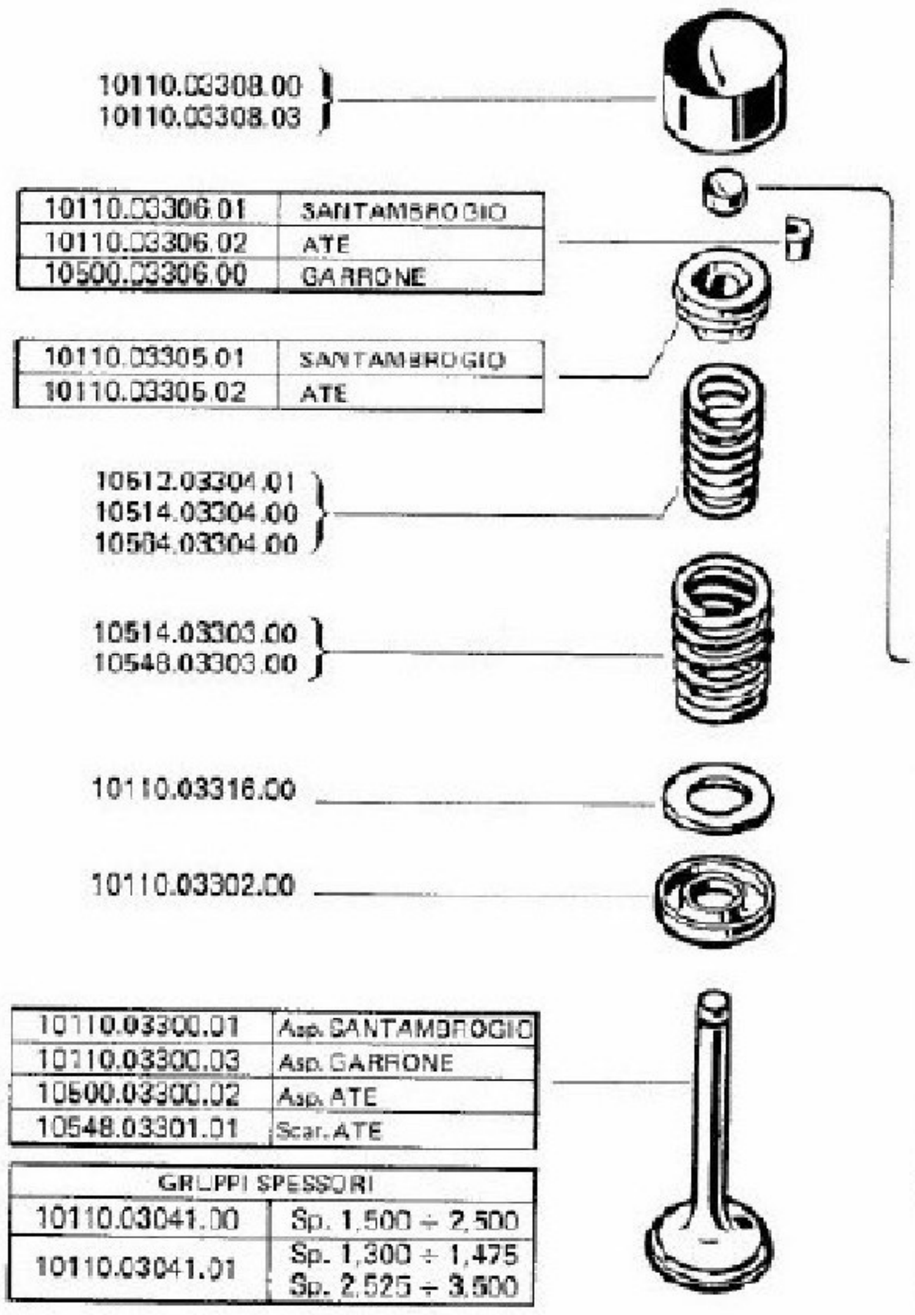

GRUPPI SPESSORI	
10110.03041.00	Sp. 1,500 ÷ 2,500
10110.03041.01	Sp. 1,300 ÷ 1,475 Sp. 2,525 ÷ 3,500

10500.03307.00 sp. 3,500	10120.03307.03 sp. 2,725	10110.03307.22 sp. 1,950
10500.03307.01 sp. 3,475	10120.03307.04 sp. 2,700	10110.03307.23 sp. 1,925
10500.03307.02 sp. 3,450	10120.03307.05 sp. 2,675	10110.03307.24 sp. 1,900
10500.03307.03 sp. 3,425	10120.03307.06 sp. 2,650	10110.03307.25 sp. 1,875
10500.03307.04 sp. 3,400	10120.03307.07 sp. 2,625	10110.03307.26 sp. 1,850
10500.03307.05 sp. 3,375	10120.03307.08 sp. 2,600	10110.03307.27 sp. 1,825
10500.03307.06 sp. 3,350	10120.03307.09 sp. 2,575	10110.03307.28 sp. 1,800
10500.03307.07 sp. 3,325	10120.03307.10 sp. 2,550	10110.03307.29 sp. 1,775
10500.03307.08 sp. 3,300	10120.03307.11 sp. 2,525	10110.03307.30 sp. 1,750
10500.03307.09 sp. 3,275	10110.03307.00 sp. 2,500	10110.03307.31 sp. 1,725
10500.03307.10 sp. 3,250	10110.03307.01 sp. 2,475	10110.03307.32 sp. 1,700
10500.03307.11 sp. 3,225	10110.03307.02 sp. 2,450	10110.03307.33 sp. 1,675
10500.03307.12 sp. 3,200	10110.03307.03 sp. 2,425	10110.03307.34 sp. 1,650
10500.03307.13 sp. 3,175	10110.03307.04 sp. 2,400	10110.03307.35 sp. 1,625
10500.03307.14 sp. 3,150	10110.03307.05 sp. 2,375	10110.03307.36 sp. 1,600
10500.03307.15 sp. 3,125	10110.03307.06 sp. 2,350	10110.03307.37 sp. 1,575
10500.03307.16 sp. 3,100	10110.03307.07 sp. 2,325	10110.03307.38 sp. 1,550
10500.03307.17 sp. 3,075	10110.03307.08 sp. 2,300	10110.03307.39 sp. 1,525
10500.03307.18 sp. 3,050	10110.03307.09 sp. 2,275	10110.03307.40 sp. 1,500
10500.03307.19 sp. 3,025	10110.03307.10 sp. 2,250	10110.03307.41 sp. 1,475
10500.03307.20 sp. 3,000	10110.03307.11 sp. 2,225	10110.03307.42 sp. 1,450
10500.03307.21 sp. 2,975	10110.03307.12 sp. 2,200	10110.03307.43 sp. 1,425
10500.03307.22 sp. 2,950	10110.03307.13 sp. 2,175	10110.03307.44 sp. 1,400
10500.03307.23 sp. 2,925	10110.03307.14 sp. 2,150	10110.03307.45 sp. 1,375
10500.03307.24 sp. 2,900	10110.03307.15 sp. 2,125	10110.03307.46 sp. 1,350
10500.03307.25 sp. 2,875	10110.03307.16 sp. 2,100	10110.03307.47 sp. 1,325
10500.03307.26 sp. 2,850	10110.03307.17 sp. 2,075	10110.03307.48 sp. 1,300
10500.03307.27 sp. 2,825	10110.03307.18 sp. 2,050	
10120.03307.00 sp. 2,800	10110.03307.19 sp. 2,025	
10120.03307.01 sp. 2,775	10110.03307.20 sp. 2,000	
10120.03307.02 sp. 2,750	10110.03307.21 sp. 1,975	

TAV. 01.42/0

VALVOLE MOLLE BICCHIERI ECC.
SOUPAPES RESSORTS POUSSOIRS,ETC.
VALVES,CUPS,SPRINGS,ETC.
VENTILE FEDERN VENTILBECHER USW.
VALVULAS MUELLES EMPUJADORES,ETC.

MODIFICA	N. ORDINAZIONE		QT.	DENOMINAZIONE	DESIGNATION	DESCRIPTION	BENENNUNG	DENOMINACIONES
	10110.03041.00		1	GR.CAPPELLOTTI	COLLECTION PASTILLES	ADJUSTING SHIMS	VENTILPLATTCHEN	GRUPO ESPESORES
	10110.03041.01		1	GR.CAPPELLOTTI	COLLECTION PASTILLES	ADJUSTING SHIMS	VENTILPLATTCHEN	GRUPO ESPESORES
	10110.03300.01	*	4	VALVOLA ASP.	SOUPAPE D ADMISSION	INTAKE VALVE	EINLASSVENTIL	VALVULA ASPIRACION
	10110.03300.03	*	4	VALVOLA ASP.	SOUPAPE D ADMISSION	INTAKE VALVE	EINLASSVENTIL	VALVULA ASPIRACION
	10110.03302.00		8	SCODELLINO	CUVETTE DE RESSORT	SPRING SEAT	FEDERTELLER	ASIENTO DEL MUELLE
	10110.03305.01	*	8	SCODELLINO	CUVETTE DE RESSORT	SPRING SEAT	FEDERTELLER	ASIENTO DEL MUELLE
	10110.03305.02	*	8	SCODELLINO	CUVETTE DE RESSORT	SPRING SEAT	FEDERTELLER	ASIENTO DEL MUELLE
	10110.03306.01	*	16	SEMICONO	DEMI-LUNE RET.SOUP.	COTTER	HALBKEGEL	SEMICONO
	10110.03306.02	*	16	SEMICONO	DEMI-LUNE RET.SOUP.	COTTER	HALBKEGEL	SEMICONO
	10110.03307.00		8	CAPPELLOTTO +2,500	PASTILLE DE REGLAGE	ADJUSTING PAD	VENTILPLAETTCHEN	SOMBRERETE DE VALVUL
	10110.03307.01		8	CAPPELLOTTO +2,475	PASTILLE DE REGLAGE	ADJUSTING PAD	VENTILPLAETTCHEN	SOMBRERETE DE VALVUL
	10110.03307.02		8	CAPPELLOTTO +2,450	PASTILLE DE REGLAGE	ADJUSTING PAD	VENTILPLAETTCHEN	SOMBRERETE DE VALVUL
	10110.03307.03		8	CAPPELLOTTO +2,425	PASTILLE DE REGLAGE	ADJUSTING PAD	VENTILPLAETTCHEN	SOMBRERETE DE VALVUL
	10110.03307.04		8	CAPPELLOTTO +2,400	PASTILLE DE REGLAGE	ADJUSTING PAD	VENTILPLAETTCHEN	SOMBRERETE DE VALVUL
	10110.03307.05		8	CAPPELLOTTO +2,375	PASTILLE DE REGLAGE	ADJUSTING PAD	VENTILPLAETTCHEN	SOMBRERETE DE VALVUL
	10110.03307.06		8	CAPPELLOTTO +2,350	PASTILLE DE REGLAGE	ADJUSTING PAD	VENTILPLAETTCHEN	SOMBRERETE DE VALVUL
	10110.03307.07		8	CAPPELLOTTO +2,325	PASTILLE DE REGLAGE	ADJUSTING PAD	VENTILPLAETTCHEN	SOMBRERETE DE VALVUL
	10110.03307.08		8	CAPPELLOTTO +2,300	PASTILLE DE REGLAGE	ADJUSTING PAD	VENTILPLAETTCHEN	SOMBRERETE DE VALVUL
	10110.03307.09		8	CAPPELLOTTO +2,275	PASTILLE DE REGLAGE	ADJUSTING PAD	VENTILPLAETTCHEN	SOMBRERETE DE VALVUL
	10110.03307.10		8	CAPPELLOTTO +2,250	PASTILLE DE REGLAGE	ADJUSTING PAD	VENTILPLAETTCHEN	SOMBRERETE DE VALVUL
	10110.03307.11		8	CAPPELLOTTO +2,225	PASTILLE DE REGLAGE	ADJUSTING PAD	VENTILPLAETTCHEN	SOMBRERETE DE VALVUL

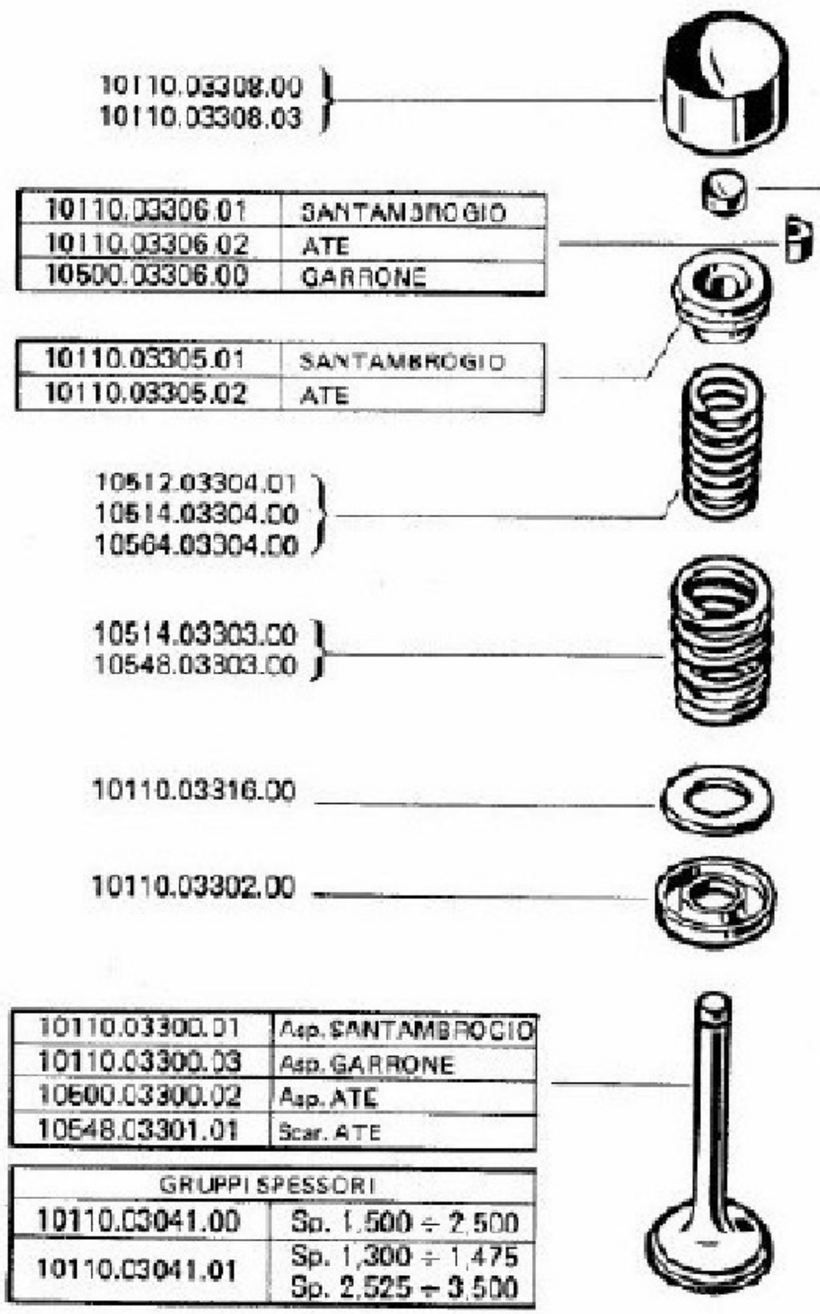

GRUPPI SPESSORI	
10110.03041.00	Sp. 1,500 ÷ 2,500
10110.03041.01	Sp. 1,300 ÷ 1,475 Sp. 2,525 ÷ 3,500

10500.03307.00 sp. 3,500	10120.03307.03 sp. 2,725	10110.03307.22 sp. 1,950
10500.03307.01 sp. 3,475	10120.03307.04 sp. 2,700	10110.03307.23 sp. 1,925
10500.03307.02 sp. 3,450	10120.03307.05 sp. 2,675	10110.03307.24 sp. 1,900
10500.03307.03 sp. 3,425	10120.03307.06 sp. 2,650	10110.03307.25 sp. 1,875
10500.03307.04 sp. 3,400	10120.03307.07 sp. 2,625	10110.03307.26 sp. 1,850
10500.03307.05 sp. 3,375	10120.03307.08 sp. 2,600	10110.03307.27 sp. 1,825
10500.03307.06 sp. 3,350	10120.03307.09 sp. 2,575	10110.03307.28 sp. 1,800
10500.03307.07 sp. 3,325	10120.03307.10 sp. 2,550	10110.03307.29 sp. 1,775
10500.03307.08 sp. 3,300	10120.03307.11 sp. 2,525	10110.03307.30 sp. 1,750
10500.03307.09 sp. 3,275	10110.03307.00 sp. 2,500	10110.03307.31 sp. 1,725
10500.03307.10 sp. 3,250	10110.03307.01 sp. 2,475	10110.03307.32 sp. 1,700
10500.03307.11 sp. 3,225	10110.03307.02 sp. 2,450	10110.03307.33 sp. 1,675
10500.03307.12 sp. 3,200	10110.03307.03 sp. 2,425	10110.03307.34 sp. 1,650
10500.03307.13 sp. 3,175	10110.03307.04 sp. 2,400	10110.03307.35 sp. 1,625
10500.03307.14 sp. 3,150	10110.03307.05 sp. 2,375	10110.03307.36 sp. 1,600
10500.03307.15 sp. 3,125	10110.03307.06 sp. 2,350	10110.03307.37 sp. 1,575
10500.03307.16 sp. 3,100	10110.03307.07 sp. 2,325	10110.03307.38 sp. 1,550
10500.03307.17 sp. 3,075	10110.03307.08 sp. 2,300	10110.03307.39 sp. 1,525
10500.03307.18 sp. 3,050	10110.03307.09 sp. 2,275	10110.03307.40 sp. 1,500
10500.03307.19 sp. 3,025	10110.03307.10 sp. 2,250	10110.03307.41 sp. 1,475
10500.03307.20 sp. 3,000	10110.03307.11 sp. 2,225	10110.03307.42 sp. 1,450
10500.03307.21 sp. 2,975	10110.03307.12 sp. 2,200	10110.03307.43 sp. 1,425
10500.03307.22 sp. 2,950	10110.03307.13 sp. 2,175	10110.03307.44 sp. 1,400
10500.03307.23 sp. 2,925	10110.03307.14 sp. 2,150	10110.03307.45 sp. 1,375
10500.03307.24 sp. 2,900	10110.03307.15 sp. 2,125	10110.03307.46 sp. 1,350
10500.03307.25 sp. 2,875	10110.03307.16 sp. 2,100	10110.03307.47 sp. 1,325
10500.03307.26 sp. 2,850	10110.03307.17 sp. 2,075	10110.03307.48 sp. 1,300
10500.03307.27 sp. 2,825	10110.03307.18 sp. 2,050	
10120.03307.00 sp. 2,800	10110.03307.19 sp. 2,025	
10120.03307.01 sp. 2,775	10110.03307.20 sp. 2,000	
10120.03307.02 sp. 2,750	10110.03307.21 sp. 1,975	

TAV. 01.42/0

VALVOLE MOLLE BICCHIERI ECC.
SOUPAPES RESSORTS POUSSOIRS,ETC.
VALVES,CUPS,SPRINGS,ETC.
VENTILE FEDERN VENTILBECHER USW.
VALVULAS MUELLES EMPUJADORES,ETC.

MODIFICA	N. ORDINAZIONE	QT.	DENOMINAZIONE	DESIGNATION	DESCRIPTION	BENENNUNG	DENOMINACIONES
	10110.03307.12	8	CAPPELLOTTO +2,200	PASTILLE DE REGLAGE	ADJUSTING PAD	VENTILPLAETTCHEN	SOMBRERETE DE VALVUL
	10110.03307.13	8	CAPPELLOTTO +2,175	PASTILLE DE REGLAGE	ADJUSTING PAD	VENTILPLAETTCHEN	SOMBRERETE DE VALVUL
	10110.03307.14	8	CAPPELLOTTO +2,150	PASTILLE DE REGLAGE	ADJUSTING PAD	VENTILPLAETTCHEN	SOMBRERETE DE VALVUL
	10110.03307.15	8	CAPPELLOTTO +2,125	PASTILLE DE REGLAGE	ADJUSTING PAD	VENTILPLAETTCHEN	SOMBRERETE DE VALVUL
	10110.03307.16	8	CAPPELLOTTO +2,100	PASTILLE DE REGLAGE	ADJUSTING PAD	VENTILPLAETTCHEN	SOMBRERETE DE VALVUL
	10110.03307.17	8	CAPPELLOTTO +2,075	PASTILLE DE REGLAGE	ADJUSTING PAD	VENTILPLAETTCHEN	SOMBRERETE DE VALVUL
	10110.03307.18	8	CAPPELLOTTO +2,050	PASTILLE DE REGLAGE	ADJUSTING PAD	VENTILPLAETTCHEN	SOMBRERETE DE VALVUL
	10110.03307.19	8	CAPPELLOTTO +2,025	PASTILLE DE REGLAGE	ADJUSTING PAD	VENTILPLAETTCHEN	SOMBRERETE DE VALVUL
	10110.03307.20	8	CAPPELLOTTO +2,000	PASTILLE DE REGLAGE	ADJUSTING PAD	VENTILPLAETTCHEN	SOMBRERETE DE VALVUL
	10110.03307.21	8	CAPPELLOTTO +1,975	PASTILLE DE REGLAGE	ADJUSTING PAD	VENTILPLAETTCHEN	SOMBRERETE DE VALVUL
	10110.03307.22	8	CAPPELLOTTO +1,950	PASTILLE DE REGLAGE	ADJUSTING PAD	VENTILPLAETTCHEN	SOMBRERETE DE VALVUL
	10110.03307.23	8	CAPPELLOTTO +1,925	PASTILLE DE REGLAGE	ADJUSTING PAD	VENTILPLAETTCHEN	SOMBRERETE DE VALVUL
	10110.03307.24	8	CAPPELLOTTO +1,900	PASTILLE DE REGLAGE	ADJUSTING PAD	VENTILPLAETTCHEN	SOMBRERETE DE VALVUL
	10110.03307.25	8	CAPPELLOTTO +1,875	PASTILLE DE REGLAGE	ADJUSTING PAD	VENTILPLAETTCHEN	SOMBRERETE DE VALVUL
	10110.03307.26	8	CAPPELLOTTO +1,850	PASTILLE DE REGLAGE	ADJUSTING PAD	VENTILPLAETTCHEN	SOMBRERETE DE VALVUL
	10110.03307.27	8	CAPPELLOTTO +1,825	PASTILLE DE REGLAGE	ADJUSTING PAD	VENTILPLAETTCHEN	SOMBRERETE DE VALVUL
	10110.03307.28	8	CAPPELLOTTO +1,800	PASTILLE DE REGLAGE	ADJUSTING PAD	VENTILPLAETTCHEN	SOMBRERETE DE VALVUL
	10110.03307.29	8	CAPPELLOTTO +1,775	PASTILLE DE REGLAGE	ADJUSTING PAD	VENTILPLAETTCHEN	SOMBRERETE DE VALVUL
	10110.03307.30	8	CAPPELLOTTO +1,750	PASTILLE DE REGLAGE	ADJUSTING PAD	VENTILPLAETTCHEN	SOMBRERETE DE VALVUL
	10110.03307.31	8	CAPPELLOTTO +1,725	PASTILLE DE REGLAGE	ADJUSTING PAD	VENTILPLAETTCHEN	SOMBRERETE DE VALVUL
	10110.03307.32	8	CAPPELLOTTO +1,700	PASTILLE DE REGLAGE	ADJUSTING PAD	VENTILPLAETTCHEN	SOMBRERETE DE VALVUL

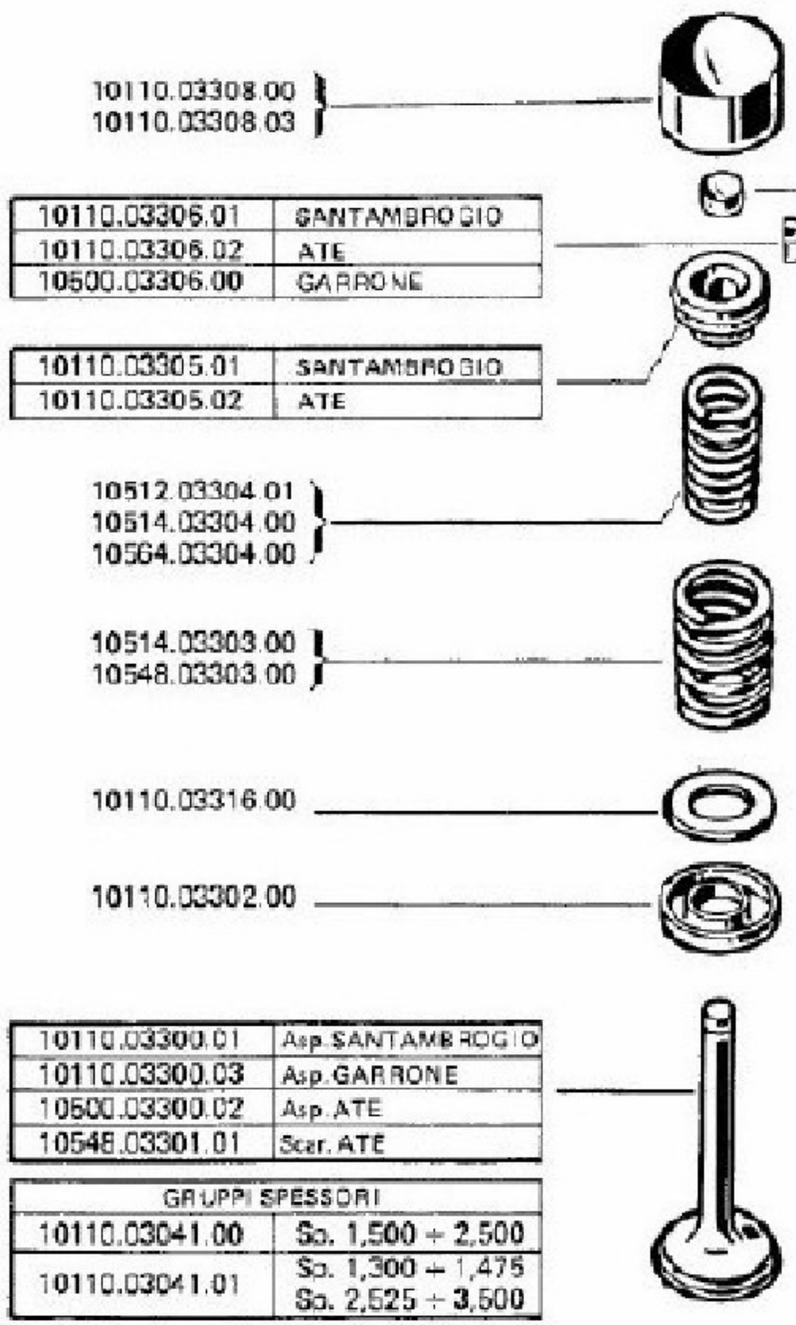

10110.03306.01	SANTAMBROGIO
10110.03306.02	ATE
10500.03306.00	GARRONE

10110.03305.01	SANTAMBROGIO
10110.03305.02	ATE

10110.03300.01	Asp.SANTAMBROGIO
10110.03300.03	Asp.GARRONE
10500.03300.02	Asp.ATE
10548.03301.01	Scar.ATE

GRUPPI SPESSORI	
10110.03041.00	Sp. 1,500 ÷ 2,500
10110.03041.01	Sp. 1,300 ÷ 1,475 Sp. 2,525 ÷ 3,500

10500.03307.00 sp. 3,500
10500.03307.01 sp. 3,475
10500.03307.02 sp. 3,450
10500.03307.03 sp. 3,425
10500.03307.04 sp. 3,400
10500.03307.05 sp. 3,375
10500.03307.06 sp. 3,350
10500.03307.07 sp. 3,325
10500.03307.08 sp. 3,300
10500.03307.09 sp. 3,275
10500.03307.10 sp. 3,250
10500.03307.11 sp. 3,225
10500.03307.12 sp. 3,200
10500.03307.13 sp. 3,175
10500.03307.14 sp. 3,150
10500.03307.15 sp. 3,125
10500.03307.16 sp. 3,100
10500.03307.17 sp. 3,075
10500.03307.18 sp. 3,050
10500.03307.19 sp. 3,025
10500.03307.20 sp. 3,000
10500.03307.21 sp. 2,975
10500.03307.22 sp. 2,950
10500.03307.23 sp. 2,925
10500.03307.24 sp. 2,900
10500.03307.25 sp. 2,875
10500.03307.26 sp. 2,850
10500.03307.27 sp. 2,825
10120.03307.00 sp. 2,800
10120.03307.01 sp. 2,775
10120.03307.02 sp. 2,750
10120.03307.03 sp. 2,725
10120.03307.04 sp. 2,700
10120.03307.05 sp. 2,675
10120.03307.06 sp. 2,650
10120.03307.07 sp. 2,625
10120.03307.08 sp. 2,600
10120.03307.09 sp. 2,575
10120.03307.10 sp. 2,550
10120.03307.11 sp. 2,525
10110.03307.00 sp. 2,500
10110.03307.01 sp. 2,475
10110.03307.02 sp. 2,450
10110.03307.03 sp. 2,425
10110.03307.04 sp. 2,400
10110.03307.05 sp. 2,375
10110.03307.06 sp. 2,350
10110.03307.07 sp. 2,325
10110.03307.08 sp. 2,300
10110.03307.09 sp. 2,275
10110.03307.10 sp. 2,250
10110.03307.11 sp. 2,225
10110.03307.12 sp. 2,200
10110.03307.13 sp. 2,175
10110.03307.14 sp. 2,150
10110.03307.15 sp. 2,125
10110.03307.16 sp. 2,100
10110.03307.17 sp. 2,075
10110.03307.18 sp. 2,050
10110.03307.19 sp. 2,025
10110.03307.20 sp. 2,000
10110.03307.21 sp. 1,975
10110.03307.22 sp. 1,950
10110.03307.23 sp. 1,925
10110.03307.24 sp. 1,900
10110.03307.25 sp. 1,875
10110.03307.26 sp. 1,850
10110.03307.27 sp. 1,825
10110.03307.28 sp. 1,800
10110.03307.29 sp. 1,775
10110.03307.30 sp. 1,750
10110.03307.31 sp. 1,725
10110.03307.32 sp. 1,700
10110.03307.33 sp. 1,675
10110.03307.34 sp. 1,650
10110.03307.35 sp. 1,625
10110.03307.36 sp. 1,600
10110.03307.37 sp. 1,575
10110.03307.38 sp. 1,550
10110.03307.39 sp. 1,525
10110.03307.40 sp. 1,500
10110.03307.41 sp. 1,475
10110.03307.42 sp. 1,450
10110.03307.43 sp. 1,425
10110.03307.44 sp. 1,400
10110.03307.45 sp. 1,375
10110.03307.46 sp. 1,350
10110.03307.47 sp. 1,325
10110.03307.48 sp. 1,300

TAV. 01.42/0

VALVOLE MOLLE BICCHIERI ECC.
SOUPAPES RESSORTS POUSSOIRS,ETC.
VALVES,CUPS,SPRINGS,ETC.
VENTILE FEDERN VENTILBECHER USW.
VALVULAS MUELLES EMPUJADORES,ETC.

MODIFICA	N. ORDINAZIONE	QT.	DENOMINAZIONE	DÉSIGNATION	DESCRIPTION	BENENNUNG	DENOMINACIONES
	10110.03307.33	8	CAPPELLOTTO +1,675	PASTILLE DE REGLAGE	ADJUSTING PAD	VENTILPLAETTCHEN	SOMBRERETE DE VALVUL
	10110.03307.34	8	CAPPELLOTTO +1,650	PASTILLE DE REGLAGE	ADJUSTING PAD	VENTILPLAETTCHEN	SOMBRERETE DE VALVUL
	10110.03307.35	8	CAPPELLOTTO +1,625	PASTILLE DE REGLAGE	ADJUSTING PAD	VENTILPLAETTCHEN	SOMBRERETE DE VALVUL
	10110.03307.36	8	CAPPELLOTTO +1,600	PASTILLE DE REGLAGE	ADJUSTING PAD	VENTILPLAETTCHEN	SOMBRERETE DE VALVUL
	10110.03307.37	8	CAPPELLOTTO +1,575	PASTILLE DE REGLAGE	ADJUSTING PAD	VENTILPLAETTCHEN	SOMBRERETE DE VALVUL
	10110.03307.38	8	CAPPELLOTTO +1,550	PASTILLE DE REGLAGE	ADJUSTING PAD	VENTILPLAETTCHEN	SOMBRERETE DE VALVUL
	10110.03307.39	8	CAPPELLOTTO +1,525	PASTILLE DE REGLAGE	ADJUSTING PAD	VENTILPLAETTCHEN	SOMBRERETE DE VALVUL
	10110.03307.40	8	CAPPELLOTTO +1,500	PASTILLE DE REGLAGE	ADJUSTING PAD	VENTILPLAETTCHEN	SOMBRERETE DE VALVUL
	10110.03307.41	8	CAPPELLOTTO +1,475	PASTILLE DE REGLAGE	ADJUSTING PAD	VENTILPLAETTCHEN	SOMBRERETE DE VALVUL
	10110.03307.42	8	CAPPELLOTTO +1,450	PASTILLE DE REGLAGE	ADJUSTING PAD	VENTILPLAETTCHEN	SOMBRERETE DE VALVUL
	10110.03307.43	8	CAPPELLOTTO +1,425	PASTILLE DE REGLAGE	ADJUSTING PAD	VENTILPLAETTCHEN	SOMBRERETE DE VALVUL
	10110.03307.44	8	CAPPELLOTTO +1,400	PASTILLE DE REGLAGE	ADJUSTING PAD	VENTILPLAETTCHEN	SOMBRERETE DE VALVUL
	10110.03307.45	8	CAPPELLOTTO +1,375	PASTILLE DE REGLAGE	ADJUSTING PAD	VENTILPLAETTCHEN	SOMBRERETE DE VALVUL
	10110.03307.46	8	CAPPELLOTTO +1,350	PASTILLE DE REGLAGE	ADJUSTING PAD	VENTILPLAETTCHEN	SOMBRERETE DE VALVUL
	10110.03307.47	8	CAPPELLOTTO +1,325	PASTILLE DE REGLAGE	ADJUSTING PAD	VENTILPLAETTCHEN	SOMBRERETE DE VALVUL
	10110.03307.48	8	CAPPELLOTTO +1,300	PASTILLE DE REGLAGE	ADJUSTING PAD	VENTILPLAETTCHEN	SOMBRERETE DE VALVUL
	10110.03308.00	8	BICCHIERE NORMALE	CUVETTE	CUP	VENTILBECHER	CUBETTA
	10110.03308.03	8	BICCHIERE MAGGIORATO	CUVETTE	CUP	VENTILBECHER	CUBETTA
	10110.03316.00	8	SPESSORE	CALE	SPACER	BEILAGE	ESPESOR
	10120.03307.00	8	CAPPELLOTTO +2,800	PASTILLE DE REGLAGE	ADJUSTING PAD	VENTILPLAETTCHEN	SOMBRERETE DE VALVUL
	10120.03307.01	8	CAPPELLOTTO +2,775	PASTILLE DE REGLAGE	ADJUSTING PAD	VENTILPLAETTCHEN	SOMBRERETE DE VALVUL

VALVOLE, MOLLE, BICCHIERI, ECC.
SOUPAPES, RESSORTS, POUSSOIRS, ETC.
VALVES, CUPS, SPRINGS, ETC.
VENTILE, FEDERN, VENTILBECHER, USW.
VALVULAS, MUELLES, EMPUJADORES, ETC.

1ª EDIZIONE 1ª EDITION 1ª EDITION 1ª ALGEMEEN 1ª EDICION — 1974 — APRILE APRIL APRIL APRIL ABRIL

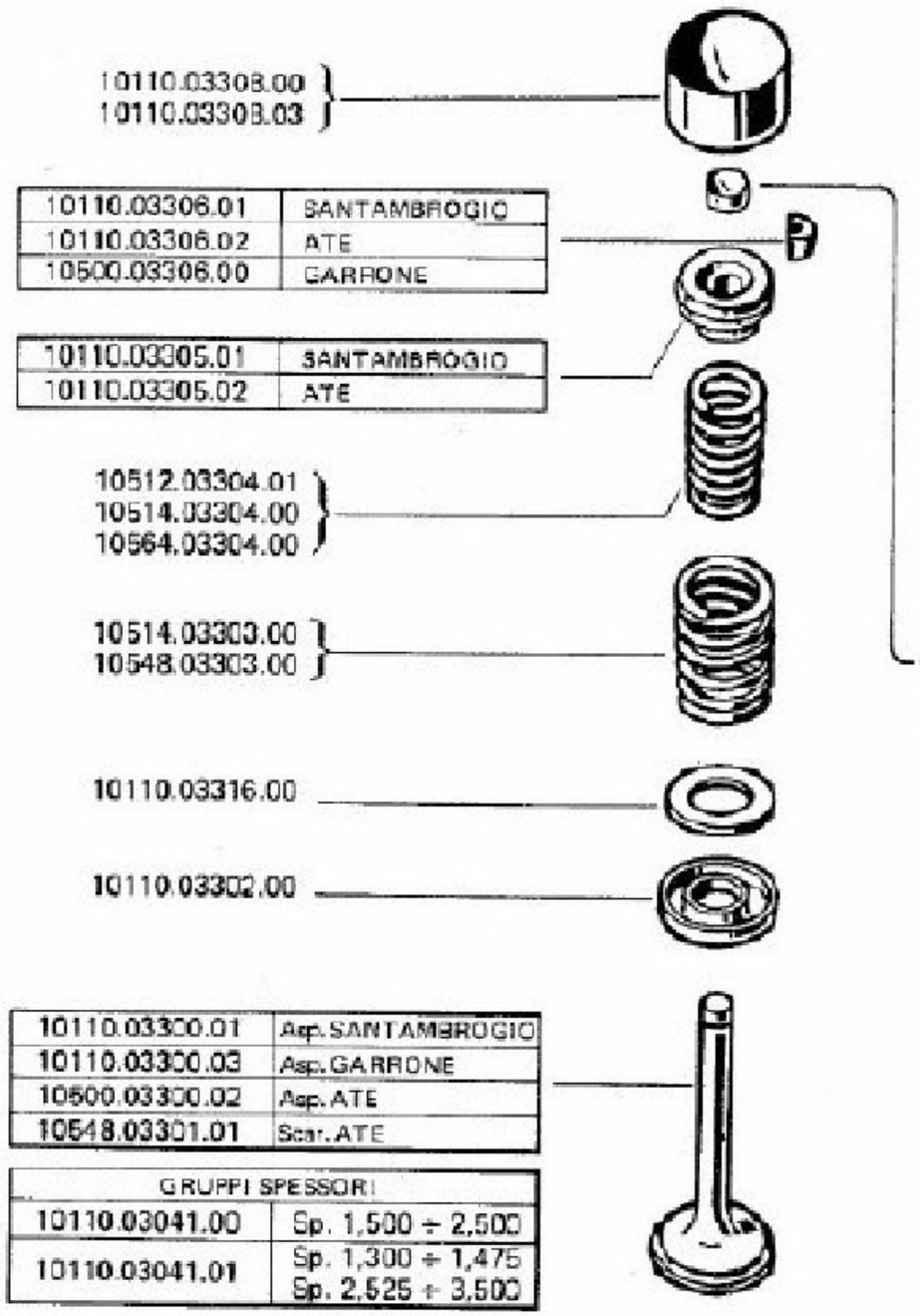

10110.03300.01	Asp. SANTAMBROGIO
10110.03300.03	Asp. GARRONE
10500.03300.02	Asp. ATE
10548.03301.01	Scar. ATE

GRUPPI SPESSORI	
10110.03041.00	Sp. 1,500 ÷ 2,500
10110.03041.01	Sp. 1,300 ÷ 1,475 Sp. 2,525 ÷ 3,500

10500.03307.00 sp. 3,500
10500.03307.01 sp. 3,475
10500.03307.02 sp. 3,450
10500.03307.03 sp. 3,425
10500.03307.04 sp. 3,400
10500.03307.05 sp. 3,375
10500.03307.06 sp. 3,350
10500.03307.07 sp. 3,325
10500.03307.08 sp. 3,300
10500.03307.09 sp. 3,275
10500.03307.10 sp. 3,250
10500.03307.11 sp. 3,225
10500.03307.12 sp. 3,200
10500.03307.13 sp. 3,175
10500.03307.14 sp. 3,150
10500.03307.15 sp. 3,125
10500.03307.16 sp. 3,100
10500.03307.17 sp. 3,075
10500.03307.18 sp. 3,050
10500.03307.19 sp. 3,025
10500.03307.20 sp. 3,000
10500.03307.21 sp. 2,975
10500.03307.22 sp. 2,950
10500.03307.23 sp. 2,925
10500.03307.24 sp. 2,900
10500.03307.25 sp. 2,875
10500.03307.26 sp. 2,850
10500.03307.27 sp. 2,825
10120.03307.00 sp. 2,800
10120.03307.01 sp. 2,775
10120.03307.02 sp. 2,750
10120.03307.03 sp. 2,725
10120.03307.04 sp. 2,700
10120.03307.05 sp. 2,675
10120.03307.06 sp. 2,650
10120.03307.07 sp. 2,625
10120.03307.08 sp. 2,600
10120.03307.09 sp. 2,575
10120.03307.10 sp. 2,550
10120.03307.11 sp. 2,525
10110.03307.00 sp. 2,500
10110.03307.01 sp. 2,475
10110.03307.02 sp. 2,450
10110.03307.03 sp. 2,425
10110.03307.04 sp. 2,400
10110.03307.05 sp. 2,375
10110.03307.06 sp. 2,350
10110.03307.07 sp. 2,325
10110.03307.08 sp. 2,300
10110.03307.09 sp. 2,275
10110.03307.10 sp. 2,250
10110.03307.11 sp. 2,225
10110.03307.12 sp. 2,200
10110.03307.13 sp. 2,175
10110.03307.14 sp. 2,150
10110.03307.15 sp. 2,125
10110.03307.16 sp. 2,100
10110.03307.17 sp. 2,075
10110.03307.18 sp. 2,050
10110.03307.19 sp. 2,025
10110.03307.20 sp. 2,000
10110.03307.21 sp. 1,975
10110.03307.22 sp. 1,950
10110.03307.23 sp. 1,925
10110.03307.24 sp. 1,900
10110.03307.25 sp. 1,875
10110.03307.26 sp. 1,850
10110.03307.27 sp. 1,825
10110.03307.28 sp. 1,800
10110.03307.29 sp. 1,775
10110.03307.30 sp. 1,750
10110.03307.31 sp. 1,725
10110.03307.32 sp. 1,700
10110.03307.33 sp. 1,675
10110.03307.34 sp. 1,650
10110.03307.35 sp. 1,625
10110.03307.36 sp. 1,600
10110.03307.37 sp. 1,575
10110.03307.38 sp. 1,550
10110.03307.39 sp. 1,525
10110.03307.40 sp. 1,500
10110.03307.41 sp. 1,475
10110.03307.42 sp. 1,450
10110.03307.43 sp. 1,425
10110.03307.44 sp. 1,400
10110.03307.45 sp. 1,375
10110.03307.46 sp. 1,350
10110.03307.47 sp. 1,325
10110.03307.48 sp. 1,300

TAV. 01.427.0

VALVOLE MOLLE BICCHIERI ECC.
SOUPAPES RESSORTS POUSSOIRS,ETC.
VALVES,CUPS,SPRINGS,ETC.
VENTILE FEDERN VENTILBECHER USW.
VALVULAS MUELLES EMPUJADORES,ETC.

MODIFICA	N. ORDINAZIONE	QT.	DENOMINAZIONE	DÉSIGNATION	DESCRIPTION	BENENNUNG	DENOMINACIONES
	10120.03307.02	8	CAPPELLOTTO +2,750	PASTILLE DE REGLAGE	ADJUSTING PAD	VENTILPLAETTCHEN	SOMBRERETE DE VALVUL
	10120.03307.03	8	CAPPELLOTTO +2,725	PASTILLE DE REGLAGE	ADJUSTING PAD	VENTILPLAETTCHEN	SOMBRERETE DE VALVUL
	10120.03307.04	8	CAPPELLOTTO +2,700	PASTILLE DE REGLAGE	ADJUSTING PAD	VENTILPLAETTCHEN	SOMBRERETE DE VALVUL
	10120.03307.05	8	CAPPELLOTTO +2,675	PASTILLE DE REGLAGE	ADJUSTING PAD	VENTILPLAETTCHEN	SOMBRERETE DE VALVUL
	10120.03307.06	8	CAPPELLOTTO +2,650	PASTILLE DE REGLAGE	ADJUSTING PAD	VENTILPLAETTCHEN	SOMBRERETE DE VALVUL
	10120.03307.07	8	CAPPELLOTTO +2,625	PASTILLE DE REGLAGE	ADJUSTING PAD	VENTILPLAETTCHEN	SOMBRERETE DE VALVUL
	10120.03307.08	8	CAPPELLOTTO +2,600	PASTILLE DE REGLAGE	ADJUSTING PAD	VENTILPLAETTCHEN	SOMBRERETE DE VALVUL
	10120.03307.09	8	CAPPELLOTTO +2,575	PASTILLE DE REGLAGE	ADJUSTING PAD	VENTILPLAETTCHEN	SOMBRERETE DE VALVUL
	10120.03307.10	8	CAPPELLOTTO +2,550	PASTILLE DE REGLAGE	ADJUSTING PAD	VENTILPLAETTCHEN	SOMBRERETE DE VALVUL
	10120.03307.11	8	CAPPELLOTTO +2,525	PASTILLE DE REGLAGE	ADJUSTING PAD	VENTILPLAETTCHEN	SOMBRERETE DE VALVUL
	10500.03300.02	* 4	VALVOLA ASP.	SOUPAPE D ADMISSION	INTAKE VALVE	EINLASSVENTIL	VALVULA ASPIRACION
	10500.03306.00	* 16	SEMICONO	DEMI-LUNE RET.SOUP.	COTTER	HALBKEGEL	SEMICONO
	10500.03307.00	8	CAPPELLOTTO +3,500	PASTILLE DE REGLAGE	ADJUSTING PAD	VENTILPLAETTCHEN	SOMBRERETE DE VALVUL
	10500.03307.01	8	CAPPELLOTTO +3,475	PASTILLE DE REGLAGE	ADJUSTING PAD	VENTILPLAETTCHEN	SOMBRERETE DE VALVUL
	10500.03307.02	8	CAPPELLOTTO +3,450	PASTILLE DE REGLAGE	ADJUSTING PAD	VENTILPLAETTCHEN	SOMBRERETE DE VALVUL
	10500.03307.03	8	CAPPELLOTTO +3,425	PASTILLE DE REGLAGE	ADJUSTING PAD	VENTILPLAETTCHEN	SOMBRERETE DE VALVUL
	10500.03307.04	8	CAPPELLOTTO +3,400	PASTILLE DE REGLAGE	ADJUSTING PAD	VENTILPLAETTCHEN	SOMBRERETE DE VALVUL
	10500.03307.05	8	CAPPELLOTTO +3,375	PASTILLE DE REGLAGE	ADJUSTING PAD	VENTILPLAETTCHEN	SOMBRERETE DE VALVUL
	10500.03307.06	8	CAPPELLOTTO +3,350	PASTILLE DE REGLAGE	ADJUSTING PAD	VENTILPLAETTCHEN	SOMBRERETE DE VALVUL
	10500.03307.07	8	CAPPELLOTTO +3,325	PASTILLE DE REGLAGE	ADJUSTING PAD	VENTILPLAETTCHEN	SOMBRERETE DE VALVUL
	10500.03307.08	8	CAPPELLOTTO +3,300	PASTILLE DE REGLAGE	ADJUSTING PAD	VENTILPLAETTCHEN	SOMBRERETE DE VALVUL

VALVOLE, MOLLE, BICCHIERI, ECC.
SOUPAPES, RESSORTS, POUSSOIRS, ETC.
VALVES, CUPS, SPRINGS, ETC.
VENTILE, FEDERN, VENTILBECHER, USW.
VALVULAS, MUELLES, EMPUJADORES, ETC.

1 EDIZIONE APRILE 1974
ED. EDITION APRIL
ED. EDITION APRIL
AUSGABE APRIL
ED. EDICION APRIL
DATA ELENCO AGGIORNAMENTO

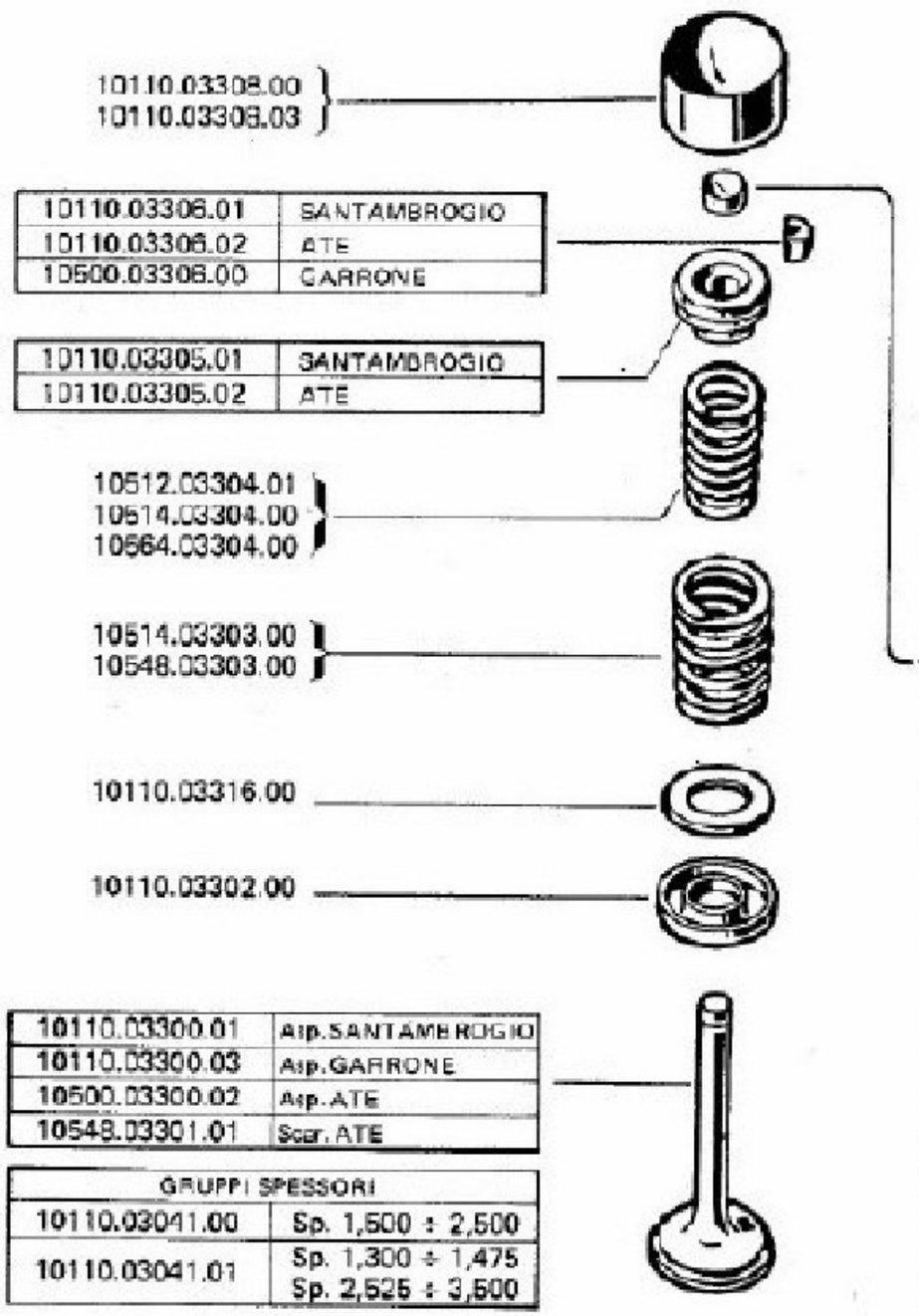

10110.03306.01	SANTAMBROGIO
10110.03306.02	ATE
10500.03306.00	GARRONE

10110.03305.01	SANTAMBROGIO
10110.03305.02	ATE

10110.03300.01	Asp.SANTAMBROGIO
10110.03300.03	Asp.GARRONE
10500.03300.02	Asp.ATE
10548.03301.01	Scar.ATE

GRUPPI SPESSORI	
10110.03041.00	Sp. 1,500 ÷ 2,500
10110.03041.01	Sp. 1,300 ÷ 1,475 Sp. 2,525 ÷ 3,500

10500.03307.00 sp. 3,500
10500.03307.01 sp. 3,475
10500.03307.02 sp. 3,450
10500.03307.03 sp. 3,425
10500.03307.04 sp. 3,400
10500.03307.05 sp. 3,375
10500.03307.06 sp. 3,350
10500.03307.07 sp. 3,325
10500.03307.08 sp. 3,300
10500.03307.09 sp. 3,275
10500.03307.10 sp. 3,250
10500.03307.11 sp. 3,225
10500.03307.12 sp. 3,200
10500.03307.13 sp. 3,175
10500.03307.14 sp. 3,150
10500.03307.15 sp. 3,125
10500.03307.16 sp. 3,100
10500.03307.17 sp. 3,075
10500.03307.18 sp. 3,050
10500.03307.19 sp. 3,025
10500.03307.20 sp. 3,000
10500.03307.21 sp. 2,975
10500.03307.22 sp. 2,950
10500.03307.23 sp. 2,925
10500.03307.24 sp. 2,900
10500.03307.25 sp. 2,875
10500.03307.26 sp. 2,850
10500.03307.27 sp. 2,825
10120.03307.00 sp. 2,800
10120.03307.01 sp. 2,775
10120.03307.02 sp. 2,750
10120.03307.03 sp. 2,725
10120.03307.04 sp. 2,700
10120.03307.05 sp. 2,675
10120.03307.06 sp. 2,650
10120.03307.07 sp. 2,625
10120.03307.08 sp. 2,600
10120.03307.09 sp. 2,575
10120.03307.10 sp. 2,550
10120.03307.11 sp. 2,525
10110.03307.00 sp. 2,500
10110.03307.01 sp. 2,475
10110.03307.02 sp. 2,450
10110.03307.03 sp. 2,425
10110.03307.04 sp. 2,400
10110.03307.05 sp. 2,375
10110.03307.06 sp. 2,350
10110.03307.07 sp. 2,325
10110.03307.08 sp. 2,300
10110.03307.09 sp. 2,275
10110.03307.10 sp. 2,250
10110.03307.11 sp. 2,225
10110.03307.12 sp. 2,200
10110.03307.13 sp. 2,175
10110.03307.14 sp. 2,150
10110.03307.15 sp. 2,125
10110.03307.16 sp. 2,100
10110.03307.17 sp. 2,075
10110.03307.18 sp. 2,050
10110.03307.19 sp. 2,025
10110.03307.20 sp. 2,000
10110.03307.21 sp. 1,975
10110.03307.22 sp. 1,950
10110.03307.23 sp. 1,925
10110.03307.24 sp. 1,900
10110.03307.25 sp. 1,875
10110.03307.26 sp. 1,850
10110.03307.27 sp. 1,825
10110.03307.28 sp. 1,800
10110.03307.29 sp. 1,775
10110.03307.30 sp. 1,750
10110.03307.31 sp. 1,725
10110.03307.32 sp. 1,700
10110.03307.33 sp. 1,675
10110.03307.34 sp. 1,650
10110.03307.35 sp. 1,625
10110.03307.36 sp. 1,600
10110.03307.37 sp. 1,575
10110.03307.38 sp. 1,550
10110.03307.39 sp. 1,525
10110.03307.40 sp. 1,500
10110.03307.41 sp. 1,475
10110.03307.42 sp. 1,450
10110.03307.43 sp. 1,425
10110.03307.44 sp. 1,400
10110.03307.45 sp. 1,375
10110.03307.46 sp. 1,350
10110.03307.47 sp. 1,325
10110.03307.48 sp. 1,300

TAV. 01.42/0 VALVOLE MOLLE BICCHIERI ECC.
SOUPAPES RESSORTS POUSSOIRS,ETC.
VALVES,CUPS,SPRINGS,ETC.
VENTILE FEDERN VENTILBECHER USW.
VALVULAS MUELLES EMPUJADORES,ETC.

MODIFICA	N. ORDINAZIONE	QT.	DENOMINAZIONE	DESIGNATION	DESCRIPTION	BENENNUNG	DENOMINACIONES
	10500.03307.09	8	CAPPELLOTTO +3,275	PASTILLE DE REGLAGE	ADJUSTING PAD	VENTILPLAETTCHEN	SOMBRERETE DE VALVUL
	10500.03307.10	8	CAPPELLOTTO +3,250	PASTILLE DE REGLAGE	ADJUSTING PAD	VENTILPLAETTCHEN	SOMBRERETE DE VALVUL
	10500.03307.11	8	CAPPELLOTTO +3,225	PASTILLE DE REGLAGE	ADJUSTING PAD	VENTILPLAETTCHEN	SOMBRERETE DE VALVUL
	10500.03307.12	8	CAPPELLOTTO +3,200	PASTILLE DE REGLAGE	ADJUSTING PAD	VENTILPLAETTCHEN	SOMBRERETE DE VALVUL
	10500.03307.13	8	CAPPELLOTTO +3,175	PASTILLE DE REGLAGE	ADJUSTING PAD	VENTILPLAETTCHEN	SOMBRERETE DE VALVUL
	10500.03307.14	8	CAPPELLOTTO +3,150	PASTILLE DE REGLAGE	ADJUSTING PAD	VENTILPLAETTCHEN	SOMBRERETE DE VALVUL
	10500.03307.15	8	CAPPELLOTTO +3,125	PASTILLE DE REGLAGE	ADJUSTING PAD	VENTILPLAETTCHEN	SOMBRERETE DE VALVUL
	10500.03307.16	8	CAPPELLOTTO +3,100	PASTILLE DE REGLAGE	ADJUSTING PAD	VENTILPLAETTCHEN	SOMBRERETE DE VALVUL
	10500.03307.17	8	CAPPELLOTTO +3,075	PASTILLE DE REGLAGE	ADJUSTING PAD	VENTILPLAETTCHEN	SOMBRERETE DE VALVUL
	10500.03307.18	8	CAPPELLOTTO +3,050	PASTILLE DE REGLAGE	ADJUSTING PAD	VENTILPLAETTCHEN	SOMBRERETE DE VALVUL
	10500.03307.19	8	CAPPELLOTTO +3,025	PASTILLE DE REGLAGE	ADJUSTING PAD	VENTILPLAETTCHEN	SOMBRERETE DE VALVUL
	10500.03307.20	8	CAPPELLOTTO +3,000	PASTILLE DE REGLAGE	ADJUSTING PAD	VENTILPLAETTCHEN	SOMBRERETE DE VALVUL
	10500.03307.21	8	CAPPELLOTTO +2,975	PASTILLE DE REGLAGE	ADJUSTING PAD	VENTILPLAETTCHEN	SOMBRERETE DE VALVUL
	10500.03307.22	8	CAPPELLOTTO +2,950	PASTILLE DE REGLAGE	ADJUSTING PAD	VENTILPLAETTCHEN	SOMBRERETE DE VALVUL
	10500.03307.23	8	CAPPELLOTTO +2,925	PASTILLE DE REGLAGE	ADJUSTING PAD	VENTILPLAETTCHEN	SOMBRERETE DE VALVUL
	10500.03307.24	8	CAPPELLOTTO +2,900	PASTILLE DE REGLAGE	ADJUSTING PAD	VENTILPLAETTCHEN	SOMBRERETE DE VALVUL
	10500.03307.25	8	CAPPELLOTTO +2,875	PASTILLE DE REGLAGE	ADJUSTING PAD	VENTILPLAETTCHEN	SOMBRERETE DE VALVUL
	10500.03307.26	8	CAPPELLOTTO +2,850	PASTILLE DE REGLAGE	ADJUSTING PAD	VENTILPLAETTCHEN	SOMBRERETE DE VALVUL
	10500.03307.27	8	CAPPELLOTTO +2,825	PASTILLE DE REGLAGE	ADJUSTING PAD	VENTILPLAETTCHEN	SOMBRERETE DE VALVUL
	10512.03304.01	* 8	MOLLA INTERNA	RESSORT DE SOUPAPE	VALVE SPRING	VENTILFEDER	MUELLE DE VALVULA
	10514.03303.00	* 8	MOLLA ESTERNA	RESSORT DE SOUPAPE	VALVE SPRING	VENTILFEDER	MUELLE DE VALVULA

VALVOLE, MOLLE, BICCHIERI, ECC.
SOUPAPES, RESSORTS, POUSSOIRS, ETC.
VALVES, CUPS, SPRINGS, ETC.
VENTILE, FEDERN, VENTILBECHER, USW.
VALVULAS, MUELLES, EMPUJADORES, ETC.

1ª EDIZIONE 1ª EDITION 1ª EDITION 1ª AUSGABE 1ª EDICION APRILE AVRIL APRIL APRIL ABRIL 1974

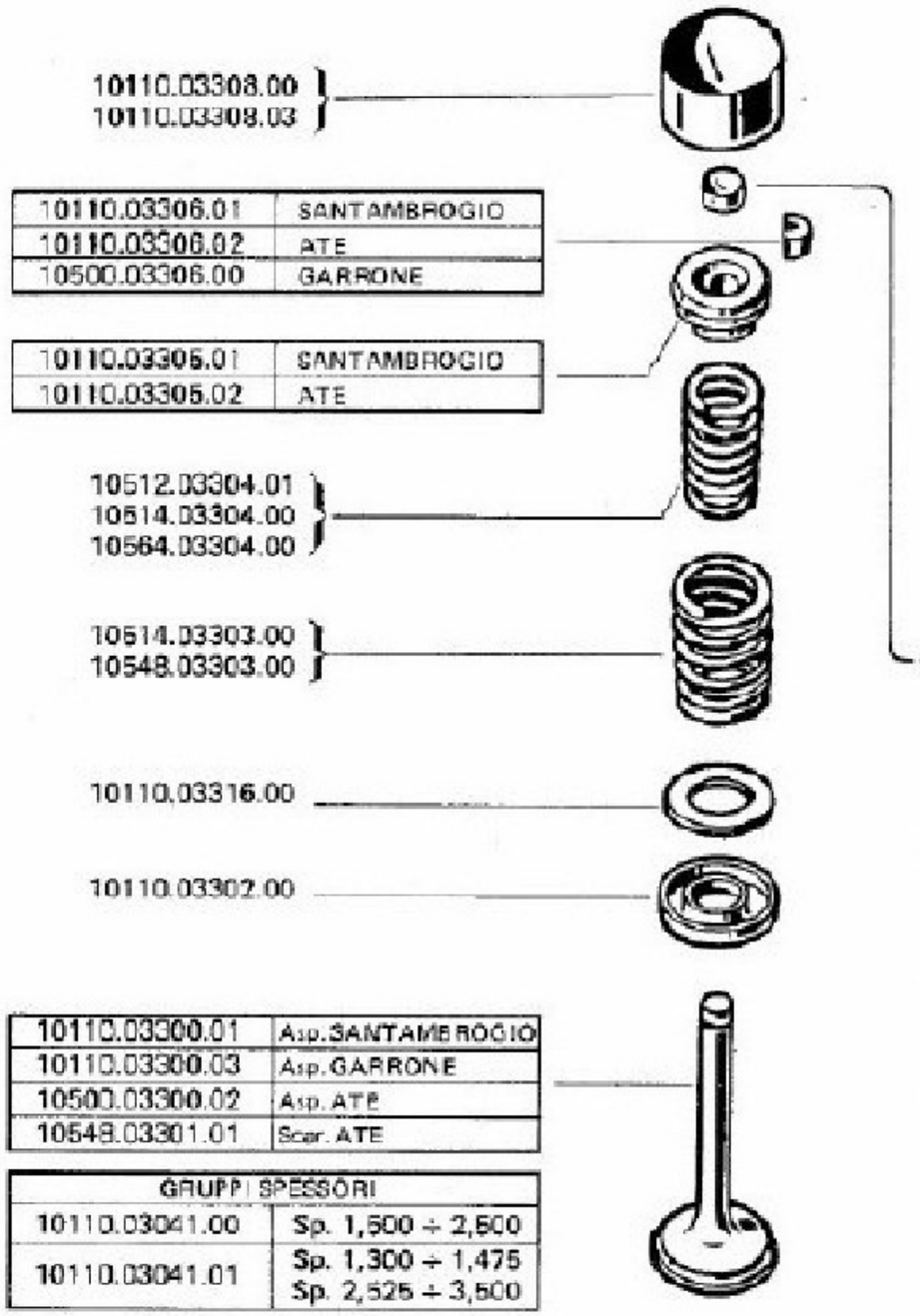

10110.03300.01	Asp.SANTAMBROGIO
10110.03300.03	Asp.GARRONE
10500.03300.02	Asp. ATE
10548.03301.01	Scar. ATE

GRUPPI SPESSORI	
10110.03041.00	Sp. 1,500 ÷ 2,500
10110.03041.01	Sp. 1,300 ÷ 1,475 Sp. 2,525 ÷ 3,500

10500.03307.00 sp. 3,500
10500.03307.01 sp. 3,475
10500.03307.02 sp. 3,450
10500.03307.03 sp. 3,425
10500.03307.04 sp. 3,400
10500.03307.05 sp. 3,375
10500.03307.06 sp. 3,350
10500.03307.07 sp. 3,325
10500.03307.08 sp. 3,300
10500.03307.09 sp. 3,275
10500.03307.10 sp. 3,250
10500.03307.11 sp. 3,225
10500.03307.12 sp. 3,200
10500.03307.13 sp. 3,175
10500.03307.14 sp. 3,150
10500.03307.15 sp. 3,125
10500.03307.16 sp. 3,100
10500.03307.17 sp. 3,075
10500.03307.18 sp. 3,050
10500.03307.19 sp. 3,025
10500.03307.20 sp. 3,000
10500.03307.21 sp. 2,975
10500.03307.22 sp. 2,950
10500.03307.23 sp. 2,925
10500.03307.24 sp. 2,900
10500.03307.25 sp. 2,875
10500.03307.26 sp. 2,850
10500.03307.27 sp. 2,825
10120.03307.00 sp. 2,800
10120.03307.01 sp. 2,775
10120.03307.02 sp. 2,750
10120.03307.03 sp. 2,725
10120.03307.04 sp. 2,700
10120.03307.05 sp. 2,675
10120.03307.06 sp. 2,650
10120.03307.07 sp. 2,625
10120.03307.08 sp. 2,600
10120.03307.09 sp. 2,575
10120.03307.10 sp. 2,550
10120.03307.11 sp. 2,525
10110.03307.00 sp. 2,500
10110.03307.01 sp. 2,475
10110.03307.02 sp. 2,450
10110.03307.03 sp. 2,425
10110.03307.04 sp. 2,400
10110.03307.05 sp. 2,375
10110.03307.06 sp. 2,350
10110.03307.07 sp. 2,325
10110.03307.08 sp. 2,300
10110.03307.09 sp. 2,275
10110.03307.10 sp. 2,250
10110.03307.11 sp. 2,225
10110.03307.12 sp. 2,200
10110.03307.13 sp. 2,175
10110.03307.14 sp. 2,150
10110.03307.15 sp. 2,125
10110.03307.16 sp. 2,100
10110.03307.17 sp. 2,075
10110.03307.18 sp. 2,050
10110.03307.19 sp. 2,025
10110.03307.20 sp. 2,000
10110.03307.21 sp. 1,975
10110.03307.22 sp. 1,950
10110.03307.23 sp. 1,925
10110.03307.24 sp. 1,900
10110.03307.25 sp. 1,875
10110.03307.26 sp. 1,850
10110.03307.27 sp. 1,825
10110.03307.28 sp. 1,800
10110.03307.29 sp. 1,775
10110.03307.30 sp. 1,750
10110.03307.31 sp. 1,725
10110.03307.32 sp. 1,700
10110.03307.33 sp. 1,675
10110.03307.34 sp. 1,650
10110.03307.35 sp. 1,625
10110.03307.36 sp. 1,600
10110.03307.37 sp. 1,575
10110.03307.38 sp. 1,550
10110.03307.39 sp. 1,525
10110.03307.40 sp. 1,500
10110.03307.41 sp. 1,475
10110.03307.42 sp. 1,450
10110.03307.43 sp. 1,425
10110.03307.44 sp. 1,400
10110.03307.45 sp. 1,375
10110.03307.46 sp. 1,350
10110.03307.47 sp. 1,325
10110.03307.48 sp. 1,300

TAV. 01.42/0 VALVOLE MOLLE BICCHIERI ECC.
SOUPAPES RESSORTS POUSSOIRS,ETC.
VALVES,CUPS,SPRINGS,ETC.
VENTILE FEDERN VENTILBECHER USW.
VALVULAS MUELLES EMPUJADORES,ETC.

MODIFICA	N. ORDINAZIONE		QT.	DENOMINAZIONE	DESIGNATION	DESCRIPTION	BENENNUNG	DENOMINACIONES
	10514.03304.00	*	8	MOLLA INTERNA	RESSORT DE SOUPAPE	VALVE SPRING	VENTILFEDER	MUELLE DE VALVULA
	10548.03301.01		4	VALVOLA SCAR.	SOUPAPE ECHAPPEMENT	EXHAUST VALVE	VENTIL AUSLASS	VALVULA ESCAPE
	10548.03303.00	*	8	MOLLA ESTERNA	RESSORT DE SOUPAPE	VALVE SPRING	VENTILFEDER	MUELLE DE VALVULA
	10564.03304.00	*	8	MOLLA INTERNA	RESSORT DE SOUPAPE	VALVE SPRING	VENTILFEDER	MUELLE DE VALVULA

* ALTERNATIVA ALTERNATIVE ALTERNATIVE WAHLWEISE ALTERNATIVA

PARTICOLARI SMERIGLIATURA VALVOLE
COLLECTION DE RODAGE SOUPAPES
VALVE LAPPING PART
ERSATZTEILE FÜR VENTILSCHLEIFEN
PARTICULARES PARA LA ESMERILADURA VALVULAS

TAV. 01.90

1ª EDIZIONE APRILE 1974
1re EDITION AVRIL 1974
1st EDITION APRIL 1974
EDICARC APRIL 1974
1ra EDICION ABRIL 1974

DATA ULTIMO AGGIORNAMENTO

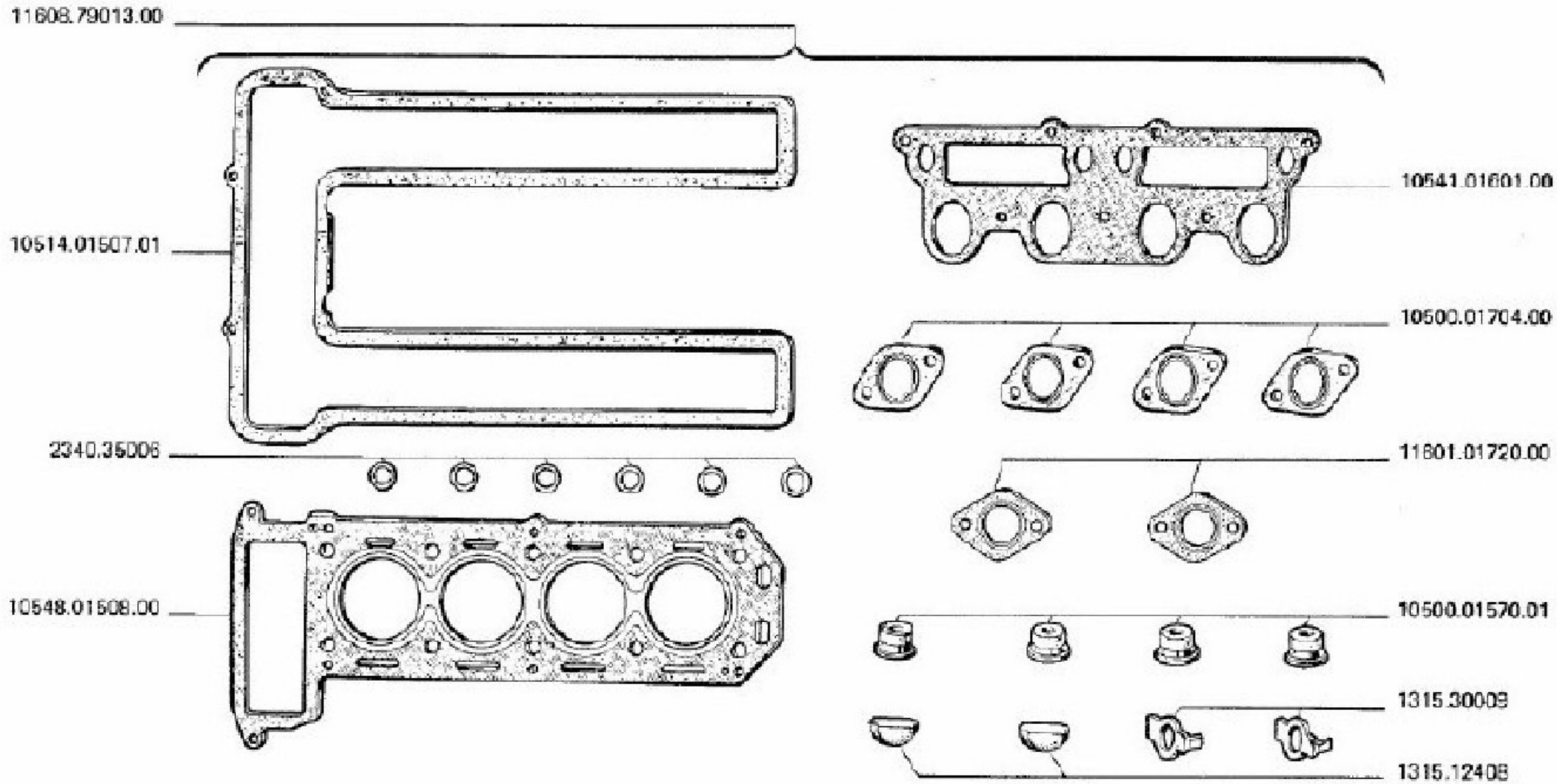

TAV. 01.90/0

PARTICOLARI SMERIGLIATURA VALVOLE
COLLECTION DE RODAGE SOUPAPES
VALVE LAPPING PART
ERSATZTELLE FUR VENTILSCHLEIFEN
PARTICULARES PARA LA ESMERILADURA VALVULAS

MODIFICA	N. ORDINAZIONE	QT.	DENOMINAZIONE	DESIGNATION	DESCRIPTION	BENENNUNG	DENOMINACIONES
	1315.12408	2	GUARNIZIONE DISTRIB.	JOINT D ETANCHEITE	SEAL	DICHTUNG	GUARNICION
	1315.30009	2	RONDELLA DI FERMO	RONDELLE	WASHER	SCHEIBE	ARANDELLA
	2340.35006	6	ANELLO TENUTA	JOINT D ETANCHEITE	SEAL	DICHTUNG	GUARNICION
	10500.01570.01	4	CAPPUCCIO	CAPUCHON	BOOT	KAPPE	CAPUCHON
	10500.01704.00	4	GUARNIZIONE SCAR.	JOINT D ETANCHEITE	SEAL	DICHTUNG	GUARNICION
	10514.01507.01	1	GUARNIZIONE COPERCH.	JOINT DE CULASSE	CYLINDER HEAD GASKET	ZYLINDERKOPFDICHTUNG	JUNTA DE CULATA
	10541.01601.00	1	GUARNIZIONE ASP.	JOINT	GASKET	DICHTUNG	JUNTA
	10548.01508.00	1	GUARNIZIONE TESTA	JOINT DE CULASSE	CYLINDER HEAD GASKET	ZYLINDERKOPFDICHTUNG	JUNTA DE CULATA
	11601.01720.00	2	GUARNIZIONE TUBO	JOINT D ETANCHEITE	SEAL	DICHTUNG	GUARNICION
	11608.79013.00	1	GR REVISIONE	COLLECTION-REPARATIO	OVERHAUL KIT	GRUPPE REPARATUR	GRUPO REVISION

COMANDO POMPA D'ALIMENTAZIONE
COMMANDE DE POMPE D'ALIMENTATION
FUEL PUMP DRIVE
KRAFTSTOFFPUMPENANTRIEB
MANDO BOMBA DE ALIMENTACION

TAV. 02.01

1ª	EDIZIONE	1974	APRILE
ère	EDITION		AVRIL
ª	EDITION		APRIL
	AUFGABE		APRIL
era	EDICION		ABRIL

DATA ELENC. AGGIORNAMENTI

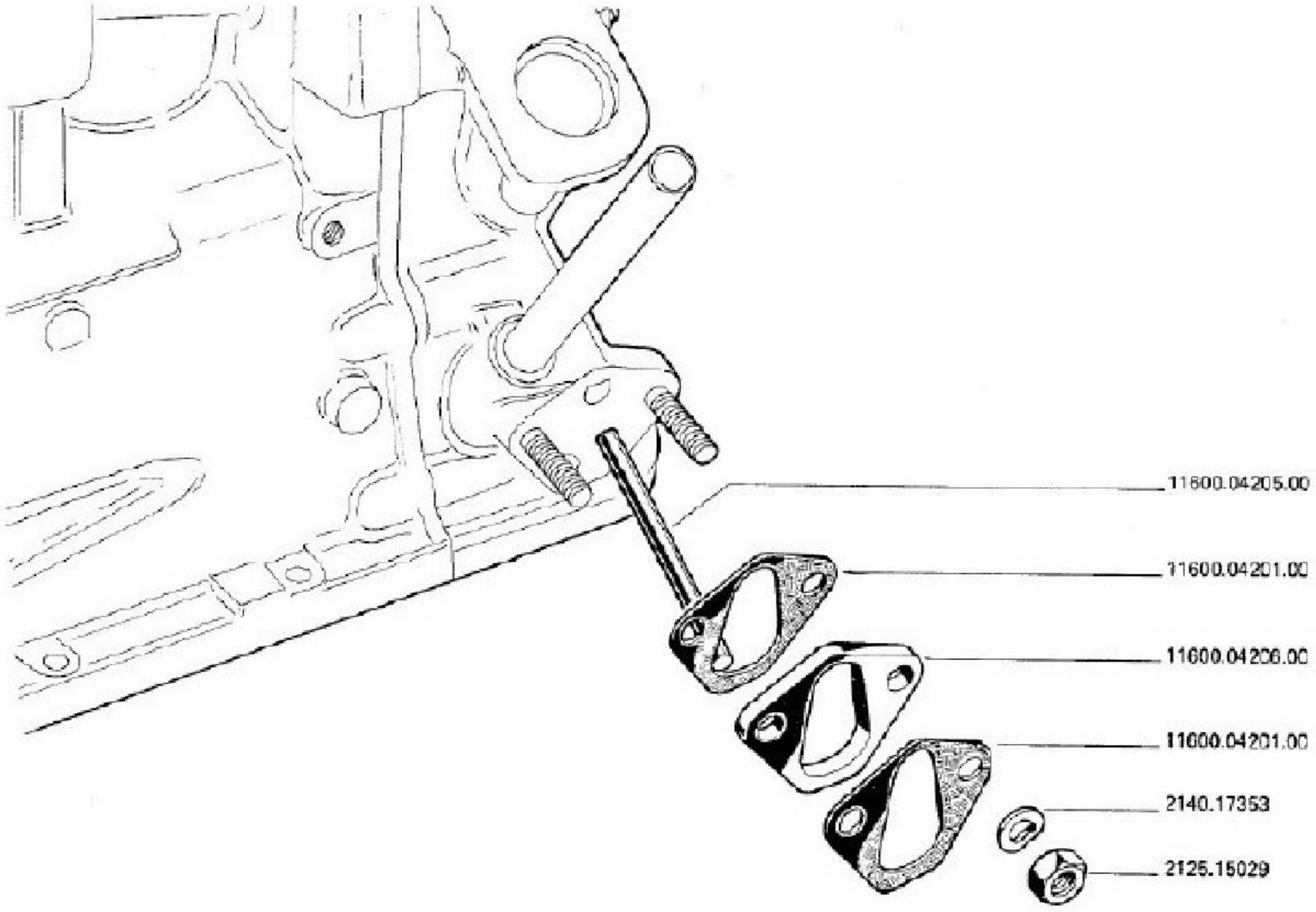

TAV. 02.01/0

COMANDO POMPA D ALIMENTAZIONE
COMMANDE DE POMPE D ALIMENTATION
FUEL PUMP DRIVE
KRAFTSTOFFPUMPENANTRIEB
MANDO BOMBA DE ALIMENTACION

MODIFICA	N. ORDINAZIONE	QT.	DENOMINAZIONE	DÉSIGNATION	DESCRIPTION	BENENNUNG	DENOMINACIONES
	2125.15029	2	DADO	ECROU	NUT	MUTTER	TUERCA
	2140.17353	2	RONDELLA	RONDELLE	WASHER	SCHEIBE	ARANDELLA
	11600.04201.00	2	GUARNIZIONE	JOINT D ETANCHEITE	SEAL	DICHTUNG	GUARNICION
	11600.04205.00	1	PUNTALE	TIGE DE POUSSEE	PUSH ROD	DRUCKSTANGE	PUNTAL
	11600.04206.00	1	SPESSORE	CALE	SPACER	BEILAGE	ESPESOR

SERBATOIO DEL CARBURANTE
RESERVOIR A ESSENCE
FUEL TANK
KRAFTSTOFFBEHÄLTER
DEPOSITO DEL CARBURANTE

TAV. 02.03

1a	EDIZIONE	1974	APRILE
1ère	EDITION		AVRIL
1st	EDITION		APRIL
	AUSGABE		APRIL
1ère	EDICION		ABRIL

DATA LIETTERA / ADDIZIONAMENTO

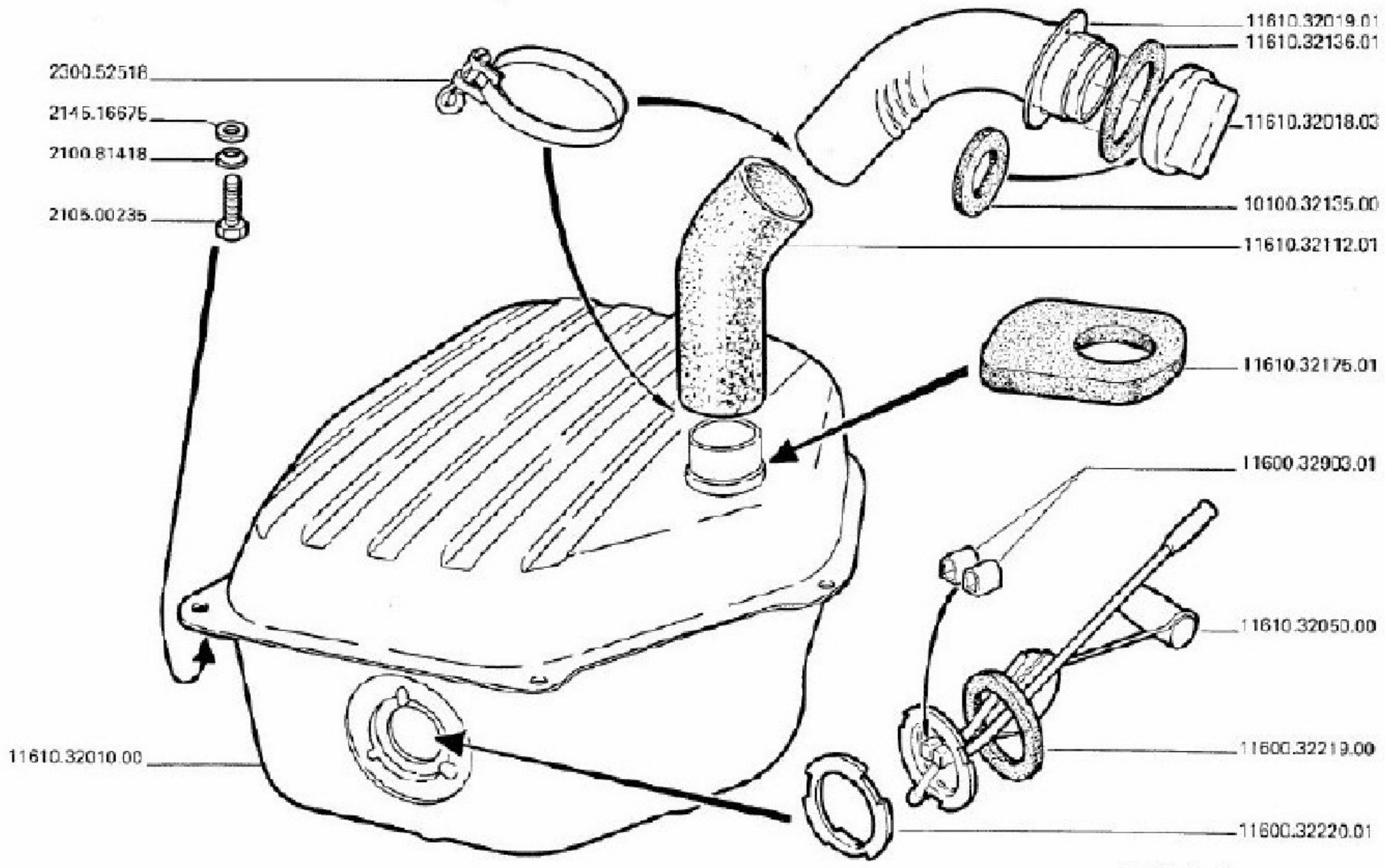

N. 6555

Alfetta GT

TAV. 02.03/0

SERBATOIO DEL CARBURANTE
RÉSERVOIR A ESSENCE
FUEL TANK
KRAFTSTOFFBEHÄLTER
DEPOSITO DEL CARBURANTE

MODIFICA	N. ORDINAZIONE	QT.	DENOMINAZIONE	DESIGNATION	DESCRIPTION	BENENNUNG	DENOMINACIONES
	2100.81418	4	RONDELLA	RONDELLE	WASHER	SCHEIBE	ARANDELLA
	2105.00235	4	VITE	VIS	SCREW	SCHRAUBE	TORNILLO
	2145.15675	4	RONDELLA	RONDELLE	WASHER	SCHEIBE	ARANDELLA
	2300.52518	2	FASCETTA	COLLIER DE DURITE	HOSE CLIP	SCHLAUCHBINDER	ABRAZADERA SUJEC.TUB
	10100.32135.00	1	GUARNIZIONE	JOINT D ETANCHEITE	SEAL	DICHTUNG	GUARNICION
	11600.32219.00	1	GUARNIZIONE	JOINT D ETANCHEITE	SEAL	DICHTUNG	GUARNICION
	11600.32220.01	1	GHIERA	ECROU A ENCOCHES	RING NUT	RINGMUTTER	ARANDELA
	11600.32903.01	2	CAPPUCCIO	CAPUCHON	BOOT	KAPPE	CAPUCHON
	11610.32010.00	1	SERBATOIO	RESERVOIR	TANK	BEHAELTER	DEPOSITO
	11610.32018.03	1	TAPPO	BOUCHON	PLUG	VERSCHLUSSCHRAUBE	TAPON
	11610.32019.01	1	TUBO INTROD.CARB.	TUBE DE JAUGE	DIPSTICK TUBE	ANSCHLUSSTUECK	PROLONGACION
	11610.32050.00	1	TRASMETTITORE	CONTACTEUR	SENDER UNIT	GEBER	TRANSMISOR
	11610.32112.01	1	MANICOTTO	MANCHON	HOSE	MUFFE	MANGUITO
	11610.32136.01	1	GUARNIZIONE	JOINT D ETANCHEITE	SEAL	DICHTUNG	GUARNICION
	11610.32175.01	1	GUARNIZIONE	JOINT D ETANCHEITE	SEAL	DICHTUNG	GUARNICION

TUBAZIONI DEL CARBURANTE
TUYAUTERIE A ESSENCE
FUEL PIPING
KRAFTSTOFFLEITUNGEN
TUBERIAS DEL CARBURANTE

TAV. 02.04

1ª EDIZIONE 1ère EDITION 1st EDITION AUSGABE 1ª EDICION — APRILE AVRIL APRIL APRIL ABRIL 1974

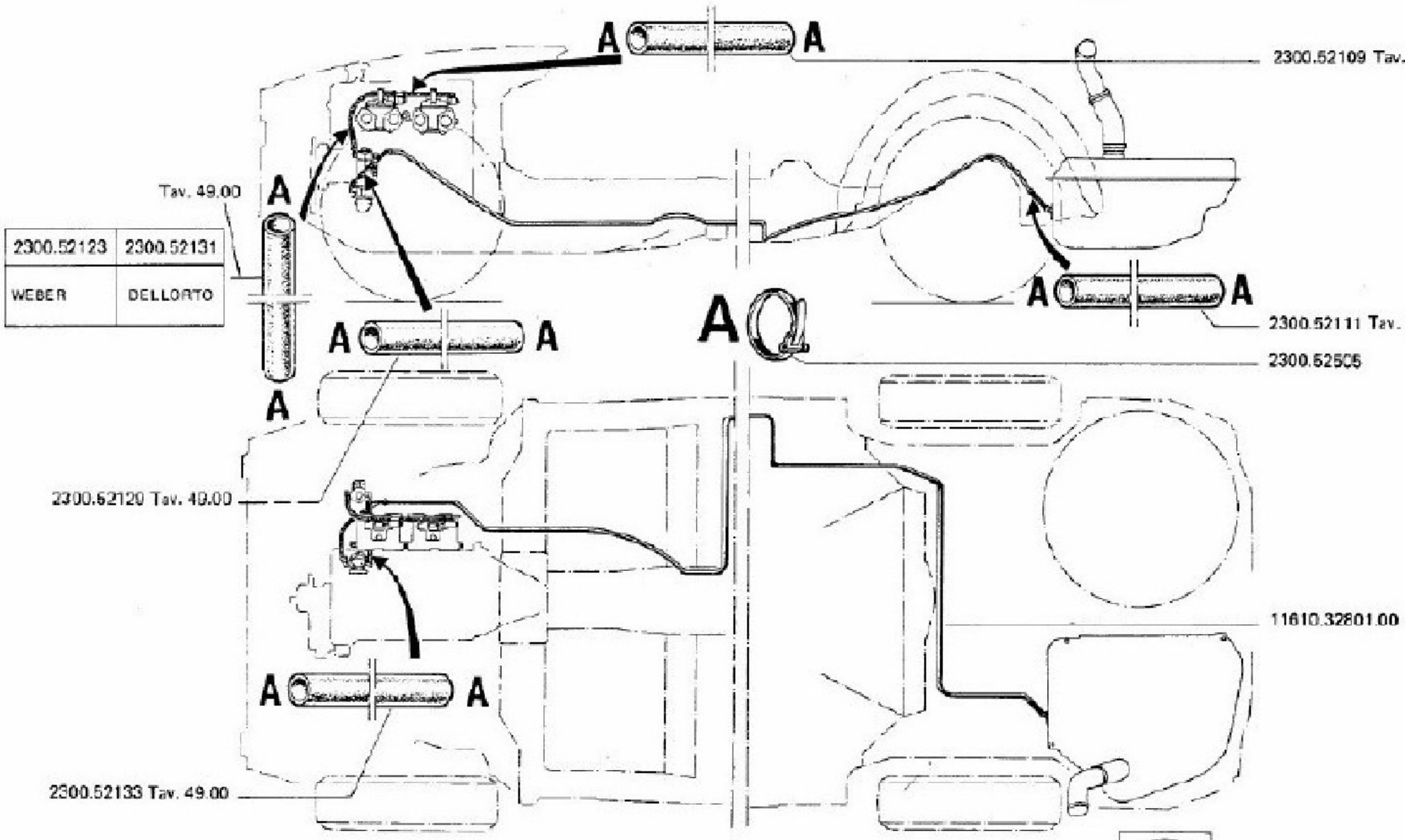

2300.52123	2300.52131
WEBER	DELLORTO

TAV. 02.04/0

TUBAZIONI DEL CARBURANTE
TUYAUTERIE ESSENCE
FUEL PIPING
KRAFSTOFFLEITUNGEN
TUBERIAS DEL CARBURANTE

MODIFICA	N. ORDINAZIONE	QT.	DENOMINAZIONE	DÉSIGNATION	DESCRIPTION	BENENNUNG	DENOMINACIONES
	2300.52109	1	TUBO TRA CARBURATORI	TUYAU D'ALIMENTATION	FEED PIPE	HALTERIEMEN	TUBO DE ALIMENTACION
	2300.52111	1	TUBO SUL SERBATOIO	TUYAU D'ALIMENTATION	FEED PIPE	HALTERIEMEN	TUBO DE ALIMENTACION
	2300.52123	1	TUBO DAL FILTRO	TUYAU D'ALIMENTATION	FEED PIPE	HALTERIEMEN	TUBO DE ALIMENTACION
	2300.52129	1	TUBO DAL SERBATOIO	TUYAU D'ALIMENTATION	FEED PIPE	HALTERIEMEN	TUBO DE ALIMENTACION
	2300.52131	1	TUBO DAL FILTRO	TUYAU D'ALIMENTATION	FEED PIPE	HALTERIEMEN	TUBO DE ALIMENTACION
	2300.52133	1	TUBO DALLA POMPA	TUYAU D'ALIMENTATION	FEED PIPE	HALTERIEMEN	TUBO DE ALIMENTACION
	2300.52505	10	FASCETTA	COLLIER DE DURITE	HOSE CLIP	SCHLAUCHBINDER	ABRAZADERA SUJEC.TUB
	11610.32801.00	1	TUBO DAL SERBATOIO	TUYAU D'ALIMENTATION	FEED PIPE	HALTERIEMEN	TUBO DE ALIMENTACION

POMPA D'ALIMENTAZIONE
POMPE D'ALIMENTATION
FUEL PUMP
KRAFTSTOFFPUMPE
BOMBA DE ALIMENTACION

FISPA

TAV. 02.10

1	EDIZIONE	1974	APRILE
1ère	EDITION		AVRIL
1st	EDITION		APRIL
-	AUSGABE		APRIL
1ra	EDICION		ABRIL

DATA AGGIORNAMENTO

10500.04020.01

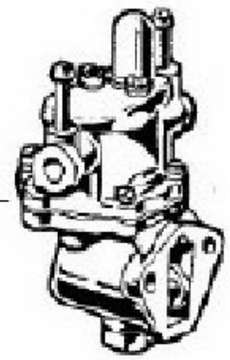

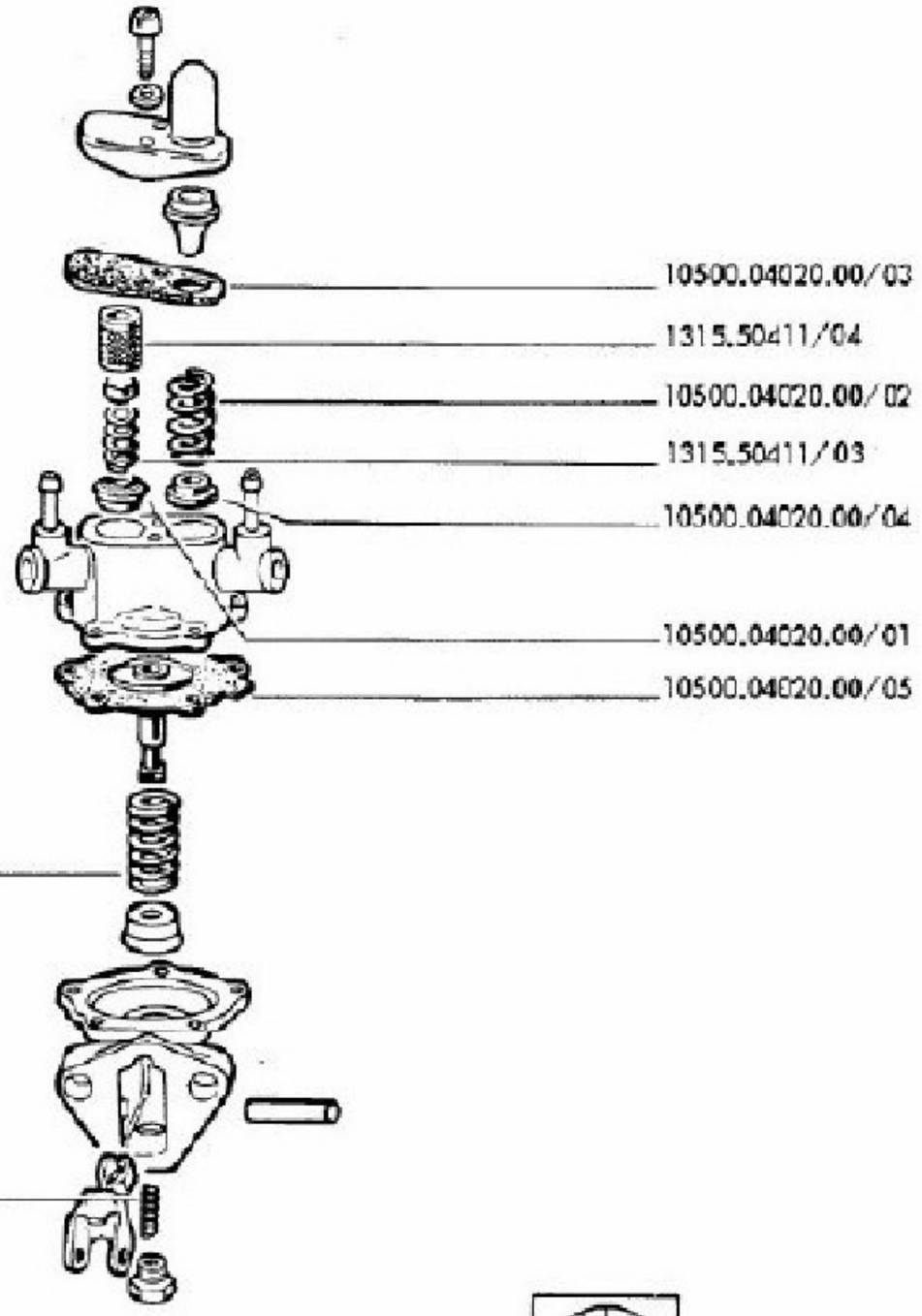

10500.04020.00/03
1315.50411/04
10500.04020.00/02
1315.50411/03
10500.04020.00/04
10500.04020.00/01
10500.04020.00/05
1315.50401/05
1315.50401/06

TAV. 02.10/0

POMPA D ALIMENTAZIONE-FISPA
POMPE D ALIMENTATION
FUEL PUMP
KRAFTSTOFFPUMPE
BOMBA DE ALIMENTACION

MODIFICA	N. ORDINAZIONE	QT.	DENOMINAZIONE	DESIGNATION	DESCRIPTION	BENENNUNG	DENOMINACIONES
	1315.50401 05	1	MOLLA DIAFRAMMA	RESSORT HELIC.CYLIND	HELICAL SPRING	SCHRAUBENFEDER	MUELLE HELICOIDAL
	1315.50401 06	1	MOLLA BILANCIERE	RESSORT HELIC.CYLIND	HELICAL SPRING	SCHRAUBENFEDER	MUELLE HELICOIDAL
	1315.50411 03	1	MOLLA VALVOLA ENTR.	RESSORT HELIC.CYLIND	HELICAL SPRING	SCHRAUBENFEDER	MUELLE HELICOIDAL
	1315.50411 04	1	RETE FILTRO	TAMIS	STRAINER SCREEN	FILTERSIEB	TAPA DE FILTRO
	10500.04020.00/01	1	VALVOLA ENTRATA	CLAPET A BILLE	BALL VALVE	KUGELVENTIL	VALVULA DE BOLA
	10500.04020.00/02	1	MOLLA VALVOLA USC.	RESSORT HELIC.CYLIND	HELICAL SPRING	SCHRAUBENFEDER	MUELLE HELICOIDAL
	10500.04020.00/03	1	GUARNIZIONE	JOINT D ETANCHEITE	SEAL	DICHTUNG	GUARNICION
	10500.04020.00/04	1	VALVOLA USCITA	CLAPET A BILLE	BALL VALVE	KUGELVENTIL	VALVULA DE BOLA
	10500.04020.00/05	1	DIAFRAMMA	DIAPHRAGME	DIAPHRAGM	MEMBRAN	DIAFRAGMA
	10500.04020.01	1	POMPA COMPL.	POMPE ALIMENTATION	FUEL PUMP	KRAFTSTOFFPUMPE	BOMBA DE ALIMENTACIO

FILTRO DEL CARBURANTE
FILTRE A ESSENCE
FUEL FILTER
KRAFTSTOFFILTER
FILTRO DEL CARBURANTE

FISPA

TAV. 02.20

1ª EDIZIONE APRILE
1ère EDITION AVRIL
1st EDITION APRIL
AUFLAGE APRIL
1ra EDICION ABRIL
1974

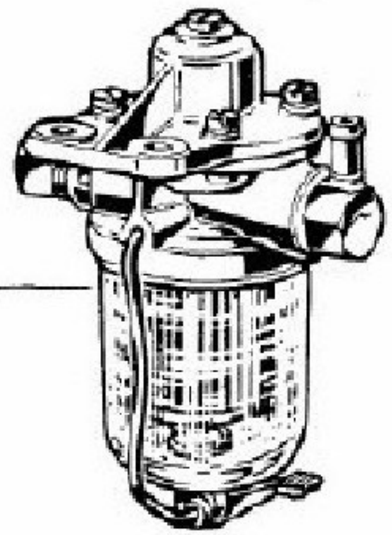

10502.32061.00



10200.32807.00
10202.04061.00/04
10202.04061.00/05



1365.84408
1365.84801/01
1365.84801/02

2105.00164
2145.17352

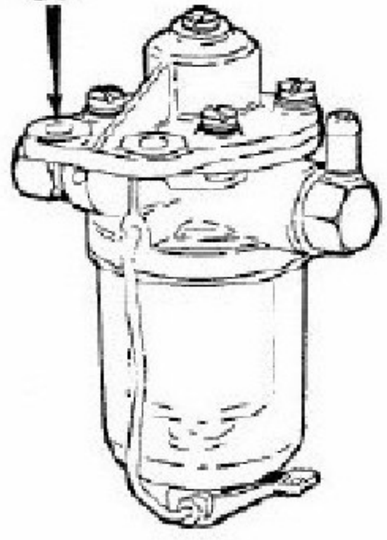

N. 6771/0

Alfetta GT

TAV. 02.20/0 FILTRO DEL CARBURANTE -FISPA-
FILTRE A ESSENCE
FUEL FILTER
KRAFTSTOFFILTER
FILTRO DEL CARBURANTE

MODIFICA	N. ORDINAZIONE	QT.	DENOMINAZIONE	DÉSIGNATION	DESCRIPTION	BENENNUNG	DENOMINACIONES
	1365.84408	1	MOLLA	RESSORT HELIC.CYLIND	HELICAL SPRING	SCHRAUBENFEDER	MUELLE HELICOIDAL
	1365.84801 01	1	GUARNIZIONE	JOINT D ETANCHEITE	SEAL	DICHTUNG	GUARNICION
	1365.84801 02	1	VASCHETTA	RESERVOIR ALIMENT.	FLUID RESERVOIR	FOERDERUNG	ALIMENTADOR
	2105.00164	2	VITE	VIS	SCREW	SCHRAUBE	TORNILLO
	2145.17352	2	RONDELLA	RONDELLE	WASHER	SCHEIBE	ARANDELLA
	10200.32807.00	1	RACCORDO	RACCORD DE TUYAU	PIPE UNION	ROHRVERBINDUNG	UNION DE TUBOS
	10202.04061.00/04	1	GUARNIZIONE	JOINT D ETANCHEITE	SEAL	DICHTUNG	GUARNICION
	10202.04061.00/05	1	ELEMENTO FILTRANTE	ELEMENT FILTRANT	FILTER ELEMENT	FILTERPAKET	PAQUETE FILTRANTE
	10502.32061.00	1	FILTRO COMPL.	FILTRE A ESSENCE	FUEL FILTER	KRAFTSTOFFILTER	FILTRO CARBURANTE

FILTRO DEL CARBURANTE
FILTRE A ESSENCE
FUEL FILTER
KRAFTSTOFFILTER
FILTRO DEL CARBURANTE

TECNOCAR

TAV. 02.21

1ª	EDIZIONE	APRILE	1974
1ère	EDITION	APRIL	
1st	EDITION	APRIL	
1.	AUSGABE	APRIL	
1ra	EDICION	ABRIL	

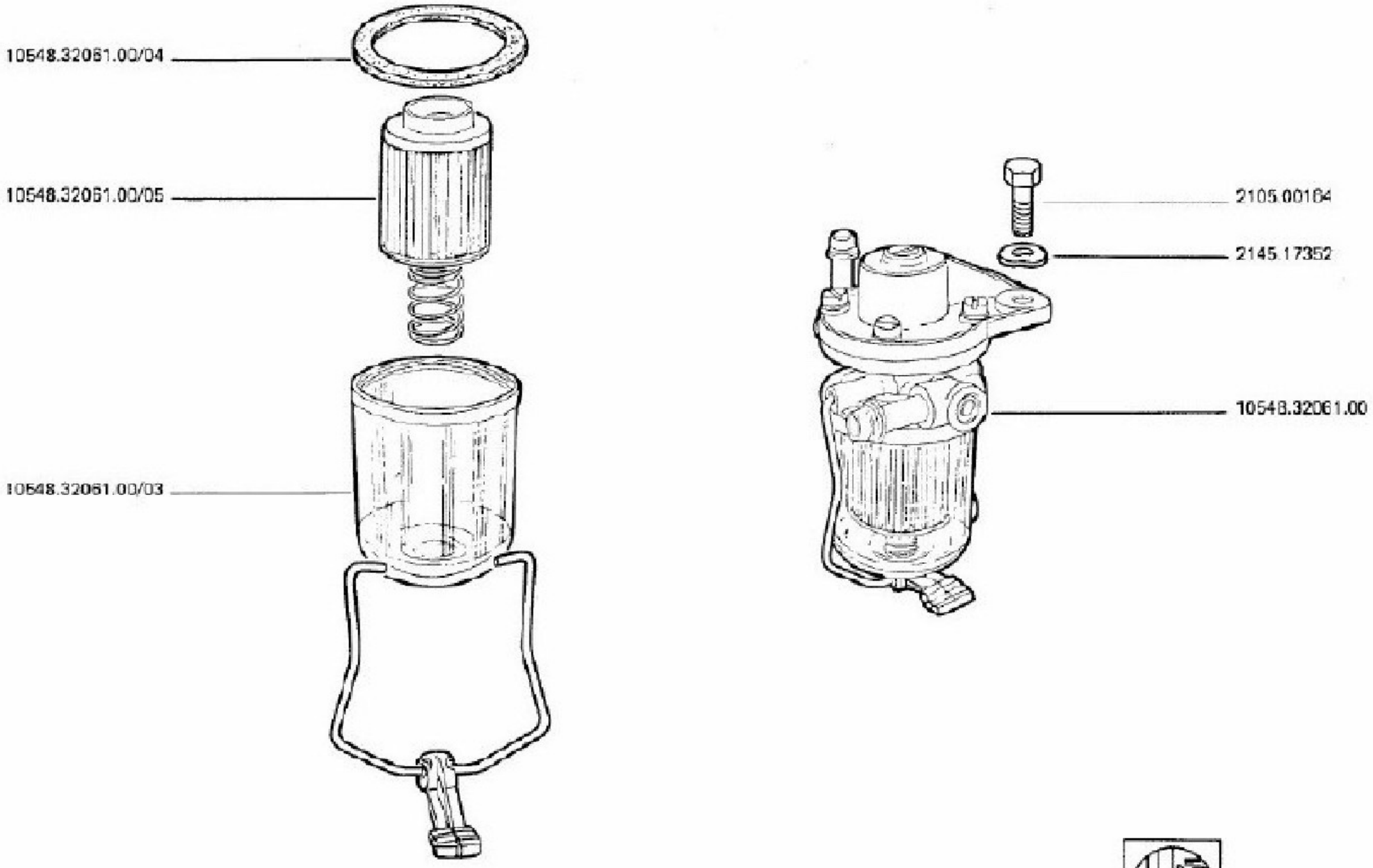

TAV. 02.21/0 FILTRO DEL CARBURANTE -TECNOCAR-
FILTRE A ESSENCE
FUEL FILTER
KRAFTSTOFFILTER
FILTRO DEL CARBURANTE

MODIFICA	N. ORDINAZIONE	QT.	DENOMINAZIONE	DESIGNATION	DESCRIPTION	BENENNUNG	DENOMINACIONES
	2105.00164	2	VITE	VIS	SCREW	SCHRAUBE	TORNILLO
	2145.17352	2	RONDELLA	RONDELLE	WASHER	SCHEIBE	ARANDELLA
	10548.32061.00	1	FILTRO COMPL.	FILTRE A ESSENCE	FUEL FILTER	KRAFTSTOFFILTER	FILTRO CARBURANTE
	10548.32061.00/03	1	VASCHETTA	RESERVOIR ALIMENT.	FLUID RESERVOIR	FOERDERUNG	ALIMENTADOR
	10548.32061.00/04	1	GUARNIZIONE	JOINT D ETANCHEITE	SEAL	DICHTUNG	GUARNICION
	10548.32061.00/05	1	ELEMENTO FILTRANTE	ELEMENT FILTRANT	FILTER ELEMENT	FILTERPAKET	PAQUETE FILTRANTE

FILTRO DEL CARBURANTE
FILTRE A ESSENCE
FUEL FILTER
KRAFTSTOFFILTER
FILTRO DEL CARBURANTE

MALPASSI

TAV. 02.22

1 EDIZIONE APRILE 1974
1ère EDITION AVRIL
1st EDITION APRIL
1. AUSGABE APRIL
1ª EDICION ABRIL

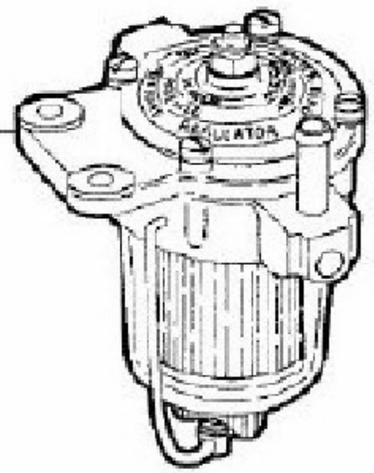

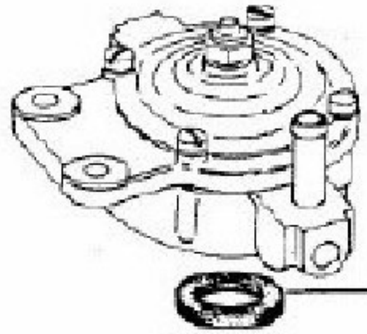

10548.32061.01/16



10548.32061.01/05

10548.32061.01/17



10548.32061.01/04

10548.32061.01/03

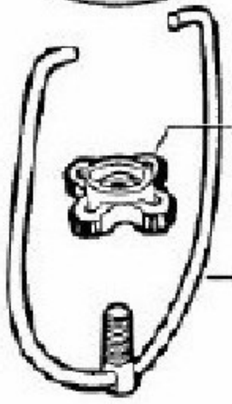

10548.32061.01/18

10548.32061.01/19

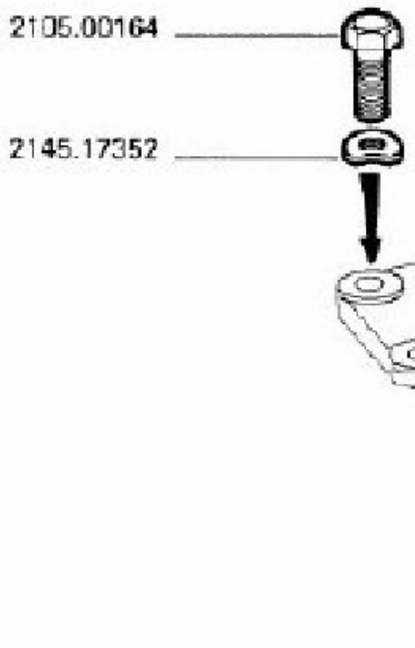

TAV. 02.22/0 FILTRO DEL CARBURANTE -HALPASSI-
FILTRE A ESSENCE
FUEL FILTER
KRAFTSTOFFILTER
FILTRO DEL CARBURANTE

MODIFICA	N. ORDINAZIONE	QT.	DENOMINAZIONE	DÉSIGNATION	DESCRIPTION	BENENNUNG	DENOMINACIONES
	2105.00164	2	VITE	VIS	SCREW	SCHRAUBE	TORNILLO
	2145.17352	2	RONDELLA	RONDELLE	WASHER	SCHEIBE	ARANDELLA
	10548.32061.01	1	FILTRO COMPL.	FILTRE	FILTER	FILTER	FILTRO
	10548.32061.01/03	1	VASCHETTA	RESERVOIR	CONTAINER	BEHALTER	DEPOSITO
	10548.32061.01/04	1	GUARNIZIONE	JOINT	GASKET	DICHTUNG	JUNTA
	10548.32061.01/05	1	ELEMENTO FILTRANTE	ELEMENT FILTRANT	FILTER ELEMENT	FILTERPAKET	PAQUETE FILTRANTE
	10548.32061.01/16	1	GUARNIZIONE	JOINT	GASKET	DICHTUNG	JUNTA
	10548.32061.01/17	1	MOLLA	RESSORT	SPRING	FEDER	MUELLE
	10548.32061.01/18	1	POMOLO	BOUTON	KNOB	KNOPF	LLAVE
	10548.32061.01/19	1	TIRANTE	BIELLETTE	ROD	ZUGSTANGE	TIRANTE

CARBURATORE
CARBURATEUR
CARBURETTOR
VERGASER
CARBURADOR

WEBER

TAV. 02.40

1ª	EDIZIONE	1974	APRILE
1st	EDITION		AVRIL
1st	EDITION		APRIL
1.	AUSGABE		APRIL
1ª	EDICION		ABRIL

DATA ULTIMO AGGIORNAMENTO

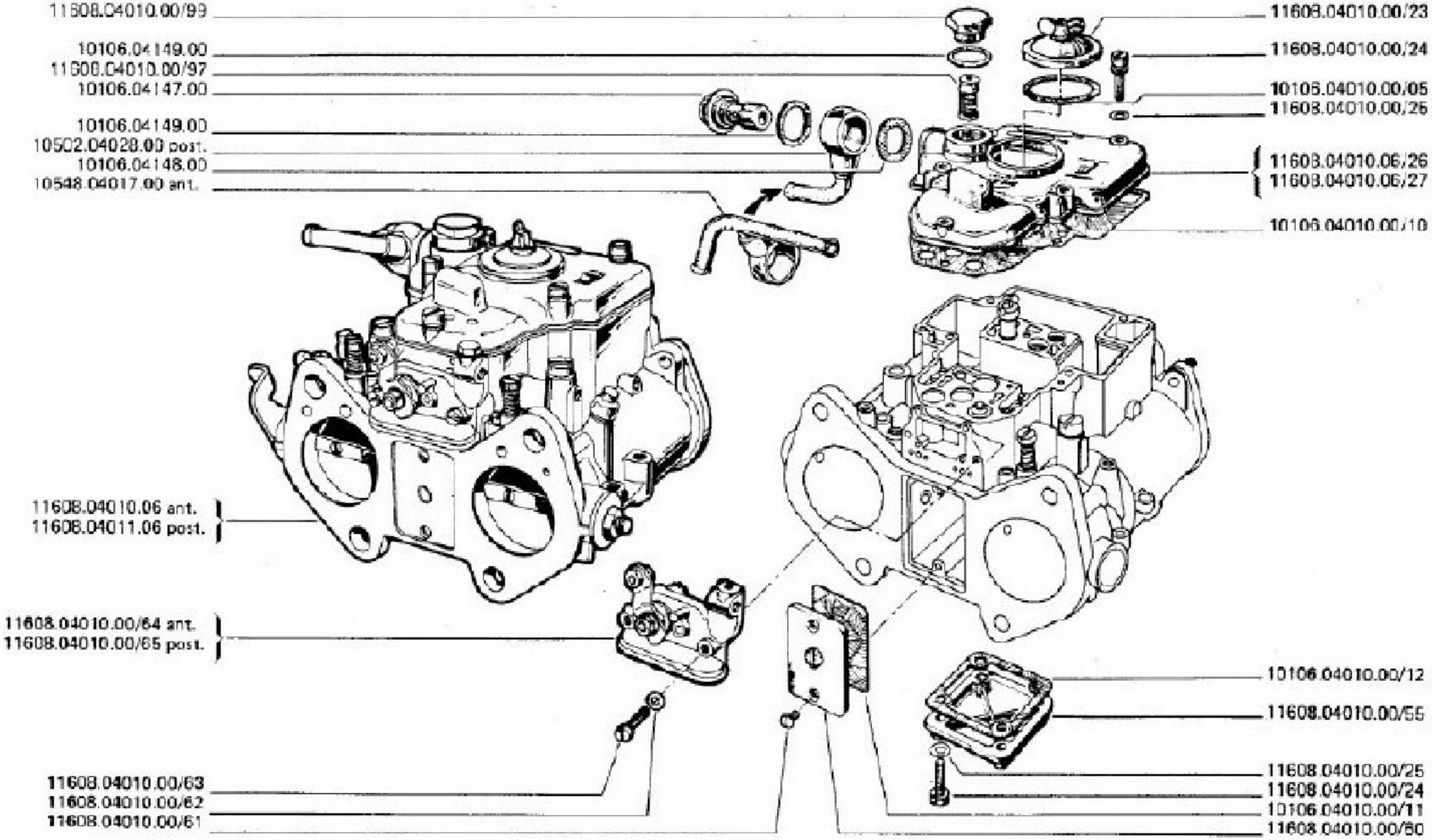

TAV. 02.40/0 CARBURATORE -WEBER-
CARBURATEUR
CARBURETTOR
VERGASER
CARBURADOR

MODIFICA	N. ORDINAZIONE	QT.	DENOMINAZIONE	DESIGNATION	DESCRIPTION	BENENNUNG	DENOMINACIONES
	10106.04010.00/05	2	GUARNIZIONE	JOINT D ETANCHEITE	SEAL	DICHTUNG	GUARNICION
	10106.04010.00/10	2	GUARNIZIONE	JOINT D ETANCHEITE	SEAL	DICHTUNG	GUARNICION
	10106.04010.00/11	2	GUARNIZIONE	JOINT D ETANCHEITE	SEAL	DICHTUNG	GUARNICION
	10106.04010.00/12	2	GUARNIZIONE	JOINT D ETANCHEITE	SEAL	DICHTUNG	GUARNICION
	10106.04147.00	2	TAPPO	BOUCHON	PLUG	VERSCHLUSSCHRAUBE	TAPON
	10106.04148.00	2	GUARNIZIONE	JOINT D ETANCHEITE	SEAL	DICHTUNG	GUARNICION
	10106.04149.00	4	GUARNIZIONE	JOINT D ETANCHEITE	SEAL	DICHTUNG	GUARNICION
	10502.04028.00	1	RACCORDO	RACCORD BANJO	BANJO CONNECTION	RINGSTUCK	CONEXION BANJO
	10548.04017.00	1	RACCORDO	RACCORD BANJO	BANJO CONNECTION	RINGSTUCK	CONEXION BANJO
	11608.04010.00/23	2	COPERCHIO GETTI	COUVERCLE	COVER	DECKEL	TAPA
	11608.04010.00/24	9	VITE	VIS	SCREW	SCHRAUBE	TORNILLO
	11608.04010.00/25	9	RONDELLA	RONDELLE	WASHER	SCHEIBE	ARANDELLA
	11608.04010.00/55	2	COPERCHIO VASCHETTA	COUVERCLE	COVER	DECKEL	TAPA
	11608.04010.00/60	2	COPERCHIO VANO POMPA	COUVERCLE	COVER	DECKEL	TAPA
	11608.04010.00/61	4	VITE	VIS	SCREW	SCHRAUBE	TORNILLO
	11608.04010.00/62	4	RONDELLA	RONDELLE	WASHER	SCHEIBE	ARANDELLA
	11608.04010.00/63	4	VITE	VIS	SCREW	SCHRAUBE	TORNILLO
	11608.04010.00/64	1	COMANDO AVVIAMENTO	COMMANDE DE STARTER	CHOKE CONTROL	ANLASS-BETATIGUNG	MANDO ARRANQUE
	11608.04010.00/65	1	COMANDO AVVIAMENTO	COMMANDE DE STARTER	CHOKE CONTROL	ANLASS-BETATIGUNG	MANDO ARRANQUE
	11608.04010.00/97	2	ELEMENTO FILTRANTE	ELEMENT FILTRANT	FILTER ELEMENT	FILTERPAKET	PAQUETE FILTRANTE
	11608.04010.00/99	2	TAPPO FILTRO	BOUCHON	PLUG	VERSCHLUSSCHRAUBE	TAPON

CARBURATORE
CARBURATEUR
CARBURETTOR
VERGASER
CARBURADOR

WEBER

TAV. 02.40

1	EDIZIONE	1974	APRILE
	EDITION		AVRIL
	EDITION		APRIL
	AUSGABE		APRIL
	EDICION		ABRIL

DATA ULTIMO AGGIORNAMENTO

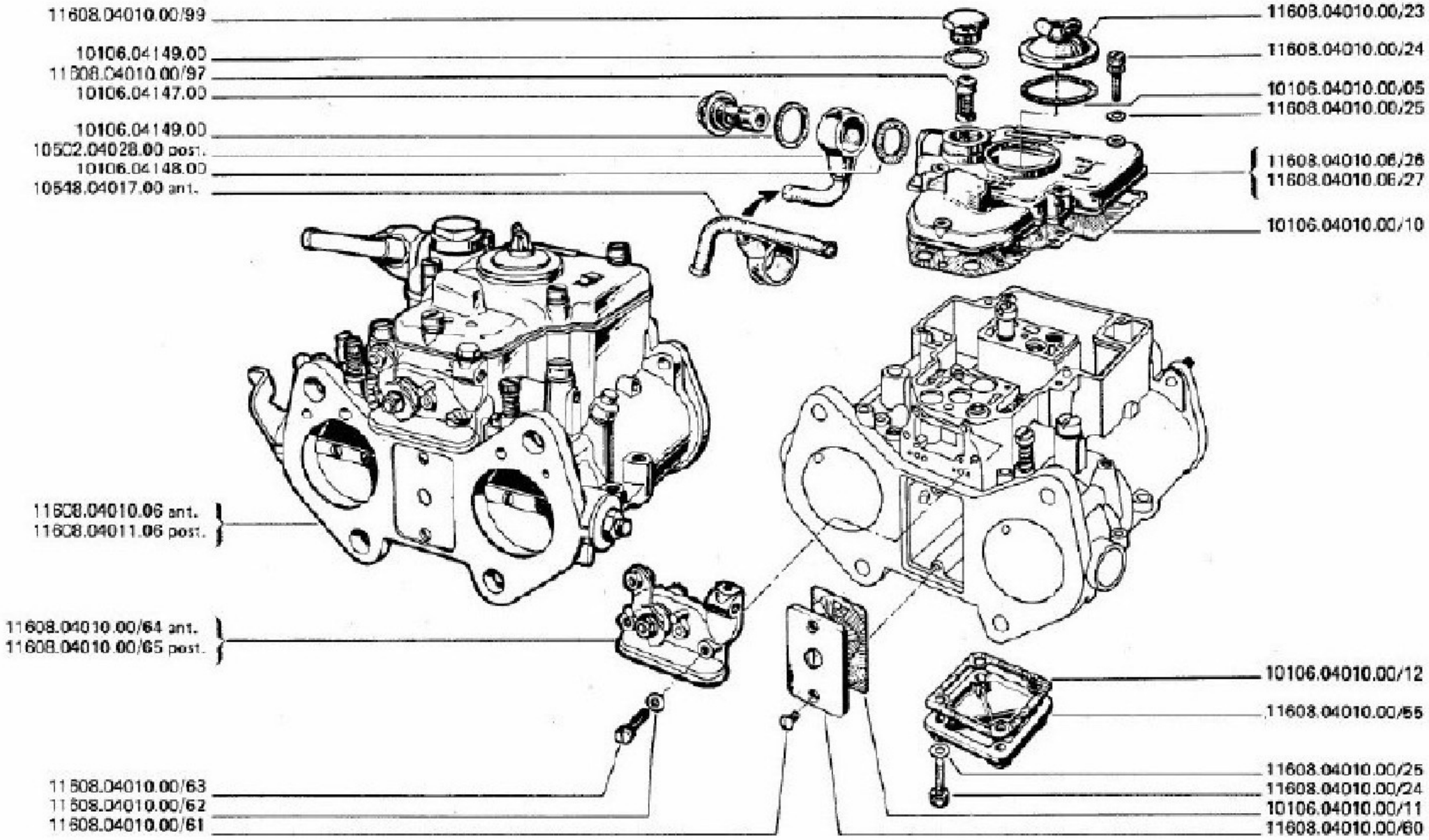

TAV. 02.40/0 CARBURATORE -WEBER-
CARBURATEUR
CARBURETTOR
VERGASER
CARBURADOR

MODIFICA	N. ORDINAZIONE	QT.	DENOMINAZIONE	DÉSIGNATION	DESCRIPTION	BENENNUNG	DENOMINACIONES
	11608.04010.06	1	CARBURATORE FLUSSATO	CARBURATEUR	CARBURETTOR	VERGASER	CARBURADOR
	11608.04010.06/26	1	COPERCHIO	COUVERCLE	COVER	DECKEL	TAPA
	11608.04010.06/27	1	COPERCHIO	COUVERCLE	COVER	DECKEL	TAPA
	11608.04011.06	1	CARBURATORE FLUSSATO	CARBURATEUR	CARBURETTOR	VERGASER	CARBURADOR

PARTICOLARI DEL CARBURATORE
DETAIL DU CARBURATEUR
CARBURETTOR COMPONENTS
EINZELTEILE DES VERGASERS
PIEZAS DEL CARBURADOR

WEBER

TAV. 02.41

1ª	EDIZIONE	APRILE	1974
1re	EDITION	AVRIL	
1st	EDITION	APRIL	
1.	AUSGABE	APRIL	
1ra	EDICION	ABRIL	

DATA SETTORE AGGIORNAMENTO

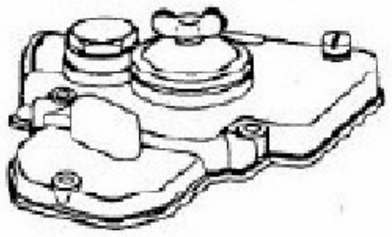

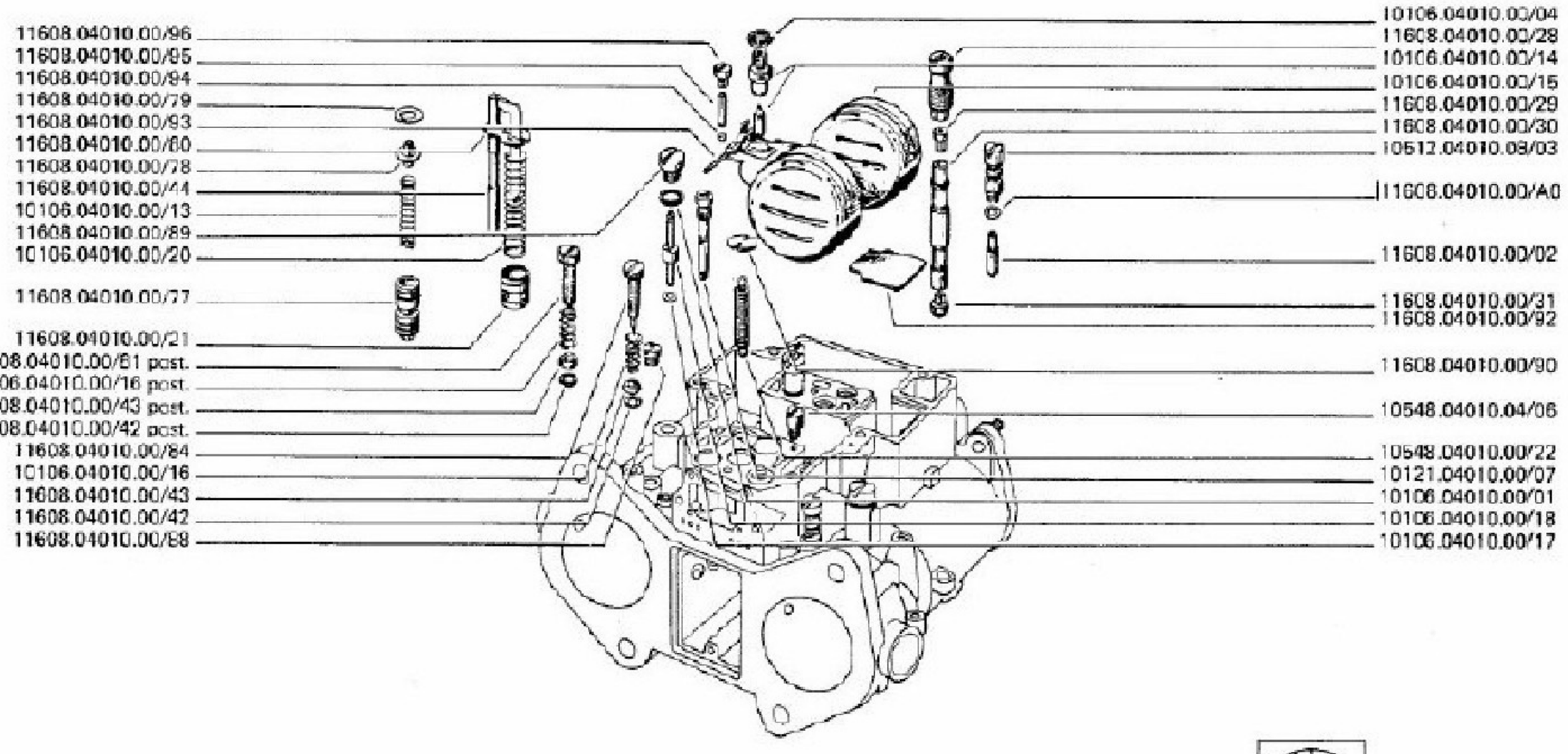

TAV. 02.41/0 PARTICOLARI DEL CARBURATORE - WEBER
DETAIL DU CARBURATEUR
CARBURETTOR COMPONENTS
EINZELTEILE DES VERGASERS
PIEZAS DEL CARBURADOR

MODIFICA	N. ORDINAZIONE	QT.	DENOMINAZIONE	DESIGNATION	DESCRIPTION	BENENNUNG	DENOMINACIONES
	10106.04010.00/01	4	GUARNIZIONE	JOINT D ETANCHEITE	SEAL	DICHTUNG	GUARNICION
	10106.04010.00/04	2	GUARNIZIONE	JOINT D ETANCHEITE	SEAL	DICHTUNG	GUARNICION
	10106.04010.00/13	4	MOLLA VALV.AVVIAM.	RESSORT	SPRING	FEDER	RESORTE
	10106.04010.00/14	2	VALVOLA A SPILLO	SOUPAPE A POINTEAU	NEEDLE VALVE	NADELVENTIL	VALVULA ALFILER
	10106.04010.00/15	2	GALLEGGIANTE	DISPOSITIF NIV.CONST	CARBUR.FLOAT.MECHAN.	SCHWIMMER	BOYA DEL CARBURADOR
	10106.04010.00/16	5	MOLLA	RESSORT	SPRING	FEDER	RESORTE
	10106.04010.00/17	4	GUARNIZIONE	JOINT D ETANCHEITE	SEAL	DICHTUNG	GUARNICION
	10106.04010.00/18	4	GETTO POMPA	GICLEUR DE POMPE	PUMP JET	PUMPENDUSE	CHORRO BOMBA
	10106.04010.00/20	2	MOLLA STANTUFO POMPA	RESSORT	SPRING	FEDER	RESORTE
	10121.04010.00/07	4	GETTO AVVIAMENTO	GICLEUR STARTER	STARTER JET	STARTERDUESE	SURTIDOR ARRANQUE
	10512.04010.08/03	4	PORTAGETTO MINIMO	PORTE-GICLEUR	JET HOLDER	DUSENHALTER	PORTASURTIDOR
	10548.04010.00/22	2	MOLLA	RESSORT	SPRING	FEDER	RESORTE
	10548.04010.04/06	2	VALVOLA ASP.SCARICO	SOUPAPE ADMISS.ECHAP	INTAKE-EXHAUST VALVE	EIN-UND AUSLASSVENTI	VALVULA DE ASPIR.YES
	11608.04010.00/A0	4	GUARNIZIONE	JOINT D ETANCHEITE	SEAL	DICHTUNG	GUARNICION
	11608.04010.00/02	4	GETTO MINIMO	GICLEUR DE RALENTI	IDLE JET	LEERLAUFDUSE	CHORRO MINIMO
	11608.04010.00/21	2	STANTUFO POMPA	PISTON	PISTON	KOLBEN	PISTON
	11608.04010.00/28	4	PORTAGETTO ARIA	PORTE-GICLEUR	JET HOLDER	DUSENHALTER	PORTASURTIDOR
	11608.04010.00/29	4	GETTO ARIA	GICLEUR D'AIR	AIR JET	LUFTDUSE	SURTIDOR DE AIRE
	11608.04010.00/30	4	TUBETTO EMULSIONATOR	TUBE EMULSION	EMULSION TUBE	MISCHROHR	EMULSIONADOR
	11608.04010.00/31	4	GETTO PRINCIPALE	GICLEUR PRINCIPAL	MAIN JET	HAUPTDUESE	SURTIDOR PRINCIPAL
	11608.04010.00/42	5	GUARNIZIONE	JOINT D ETANCHEITE	SEAL	DICHTUNG	GUARNICION

PARTICOLARI DEL CARBURATORE
DETAIL DU CARBURATEUR
CARBURETTOR COMPONENTS
EINZELTEILE DES VERGASERS
PIEZAS DEL CARBURADOR

WEBER

TAV. 02.41

1ª	EDIZIONE	1974	APRILE	
1st	EDITION		APRIL	
1re	EDITION		APRIL	
1.	AUSGABE		APRIL	
1ª	EDICION		ABRIL	

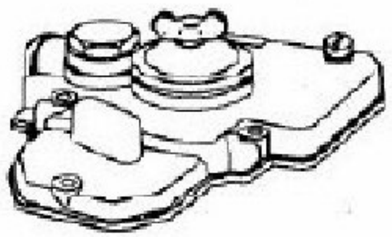

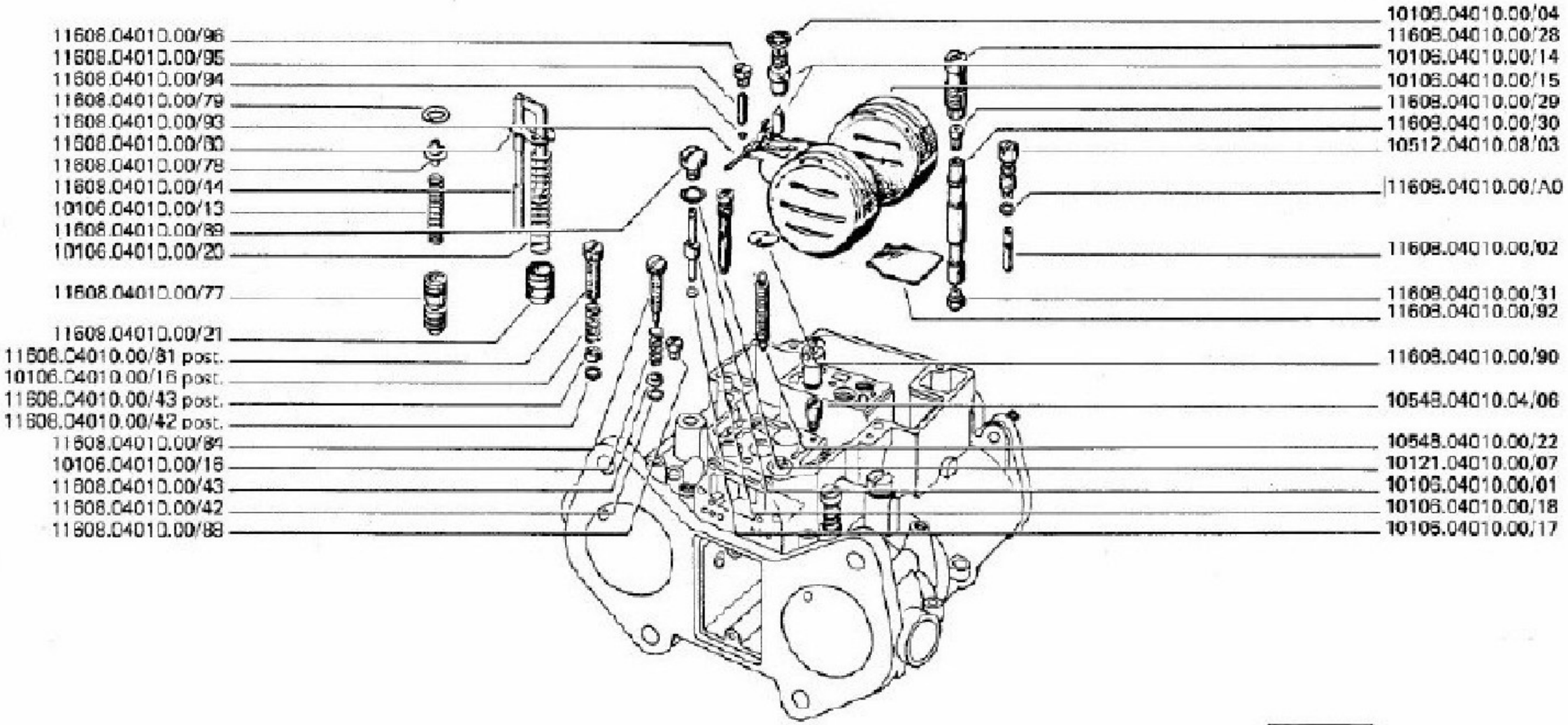

TAV. 02.41/0 PARTICOLARI DEL CARBURATORE - WEBER
DETAIL DU CARBURATEUR
CARBURETTOR COMPONENTS
EINZELTEILE DES VERGASERS
PIEZAS DEL CARBURADOR

MODIFICA	N. ORDINAZIONE	QT.	DESIGNAZIONE	DESIGNATION	DESCRIPTION	BENENNUNG	DENOMINACION
	11608.04010.00/43	5	SCODELLINO	COUPELLE	CUP	TELLER	CAZOLETA
	11608.04010.00/44	2	ASTA COMANDO POMPA	TIGE-POUSSOIR	PUSH ROD	STOESSEL	EMPUJADOR
	11608.04010.00/77	4	VALVOLA AVVIAMENTO	SOUPAPE DE STARTER	CHOKE VALVE	ANLASSVENTIL	VALVULA DE ARRANQUE
	11608.04010.00/78	4	GUIDA MOLLA		WINDOW GUIDE		
	11608.04010.00/79	4	ANELLO ELASTICO	JONC DE RETENUE	RETAINER RING	SPRENGRING	ANILLO ELASTICO
	11608.04010.00/80	2	PIASTRINA RITEGNO	PLAQUETTE	PLATE	PLAETTCHEN	PLAQUITA
	11608.04010.00/81	1	VITE	VIS	SCREW	SCHRAUBE	TORNILLO
	11608.04010.00/84	4	VITE	VIS	SCREW	SCHRAUBE	TORNILLO
	11608.04010.00/88	4	VITE	VIS	SCREW	SCHRAUBE	TORNILLO
	11608.04010.00/89	4	TAPPO GETTO POMPA	BOUCHON	PLUG	VERSCHLUSSCHRAUBE	TAPON
	11608.04010.00/90	2	PIATTELLO MOLLA	COUPELLE	SEAT	TELLER	PLATILLO
	11608.04010.00/92	2	PIASTRINA VASCHETTA	PLAQUETTE	PLATE	PLAETTCHEN	PLAQUITA
	11608.04010.00/93	2	PERNO	AXE	PIVOT PIN	ZAPFEN	PERNO
	11608.04010.00/94	4	SFERA	BILLE	BALL	KUGEL	ESFERA
	11608.04010.00/95	4	PREMISFERA	PRESSE-BILLE	BALL SEAT	KUGELHALTER	EMPUJA-ESFERA
	11608.04010.00/96	4	VITE	VIS	SCREW	SCHRAUBE	TORNILLO

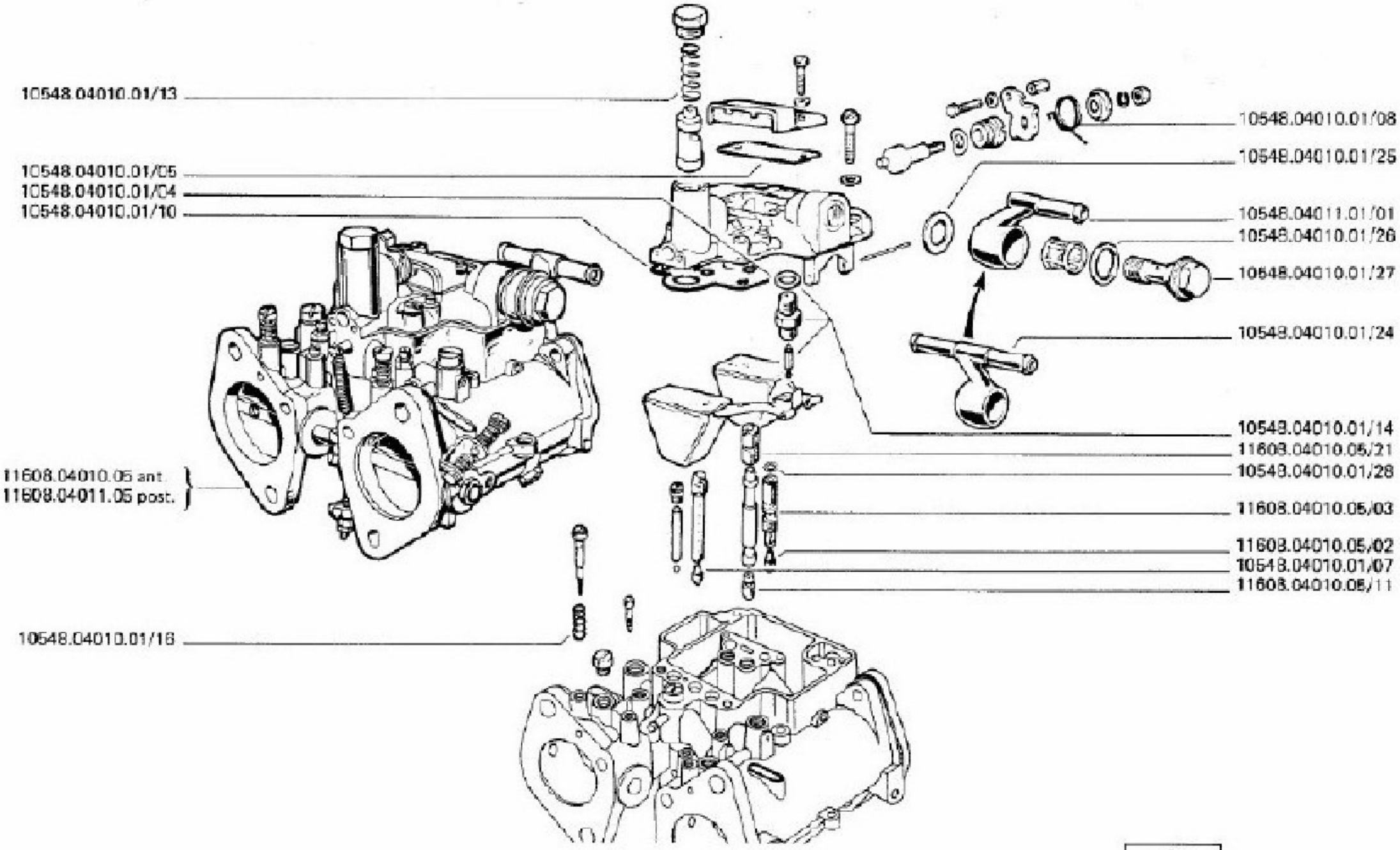
10548.04010.01/13
10548.04010.01/05
10548.04010.01/04
10548.04010.01/10
11608.04010.05 ant.
11608.04011.05 post.
10548.04010.01/16
10548.04010.01/08
10548.04010.01/25
10548.04011.01/01
10548.04010.01/26
10548.04010.01/27
10548.04010.01/24
10548.04010.01/14
11608.04010.05/21
10548.04010.01/28
11608.04010.05/03
11608.04010.05/02
10548.04010.01/07
11608.04010.05/11

TAV. 02.46/0 CARBURATORE -DELLORTO-
CARBURATEUR
CARBURETTOR
VERGASER
CARBURADOR

MODIFICA	N. ORDINAZIONE	QT.	DENOMINAZIONE	DESIGNATION	DESCRIPTION	BENENNUNG	DENOMINACIONES
	10548.04010.01/04	2	GUARNIZIONE	JOINT D ETANCHEITE	SEAL	DICHTUNG	GUARNICION
	10548.04010.01/05	2	GUARNIZIONE	JOINT D ETANCHEITE	SEAL	DICHTUNG	GUARNICION
	10548.04010.01/07	2	GETTO AVVIAMENTO	GICLEUR STARTER	STARTER JET	STARTERDUESE	SURTIDOR ARRANQUE
	10548.04010.01/08	2	MOLLA	RESSORT	SPRING	FEDER	RESORTE
	10548.04010.01/10	2	GUARNIZIONE	JOINT D ETANCHEITE	SEAL	DICHTUNG	GUARNICION
	10548.04010.01/13	2	MOLLA VALVOLA	RESSORT DE SOUPAPE	VALVE SPRING	VENTILFEDER	MUELLE DE VALVULA
	10548.04010.01/14	2	VALVOLA A SPILLO	SOUPAPE A POINTEAU	NEEDLE VALVE	NADELVENTIL	VALVULA ALFILER
	10548.04010.01/16	4	MOLLA	RESSORT	SPRING	FEDER	RESORTE
	10548.04010.01/24	1	RACCORDO	RACCORD BANJO	BANJO CONNECTION	RINGSTUCK	CONEXION BANJO
	10548.04010.01/25	2	GUARNIZIONE	JOINT D ETANCHEITE	SEAL	DICHTUNG	GUARNICION
	10548.04010.01/26	2	GUARNIZIONE	JOINT D ETANCHEITE	SEAL	DICHTUNG	GUARNICION
	10548.04010.01/27	2	TAPPO	BOUCHON	PLUG	VERSCHLUSSCHRAUBE	TAPON
	10548.04010.01/28	4	GUARNIZIONE	JOINT D ETANCHEITE	SEAL	DICHTUNG	GUARNICION
	10548.04011.01/01	1	RACCORDO	RACCORD BANJO	BANJO CONNECTION	RINGSTUCK	CONEXION BANJO
	11608.04010.05	1	CARBURATORE FLUSSATO	CARBURATEUR	CARBURETTOR	VERGASER	CARBURADOR
	11608.04010.05/02	4	GETTO MINIMO	GICLEUR DE RALENTI	IDLE JET	LEERLAUFDUSE	CHORRO MINIMO
	11608.04010.05/03	4	CALIBRATORE MINIMO	GILLEUR CALIBRE	METERING JET	KORREKTURDUESE	CALIBRADOR
	11608.04010.05/11	4	GETTO MASSIMO	GICLEUR PRINCIPAL	FULL TROTTLE JET	VOLLAST-DUSE	CHORRO MAXIMO
	11608.04010.05/21	2	CALIBRATORE ARIA	GILLEUR CALIBRE	METERING JET	KORREKTURDUESE	CALIBRADOR
	11608.04011.05	1	CARBURATORE FLUSSATO	CARBURATEUR	CARBURETTOR	VERGASER	CARBURADOR

1ª EDIZIONE APRILE 1974
1re EDITION AVRIL
1st EDITION APRIL
AUSGABE APRIL
1ra EDICION ABRIL

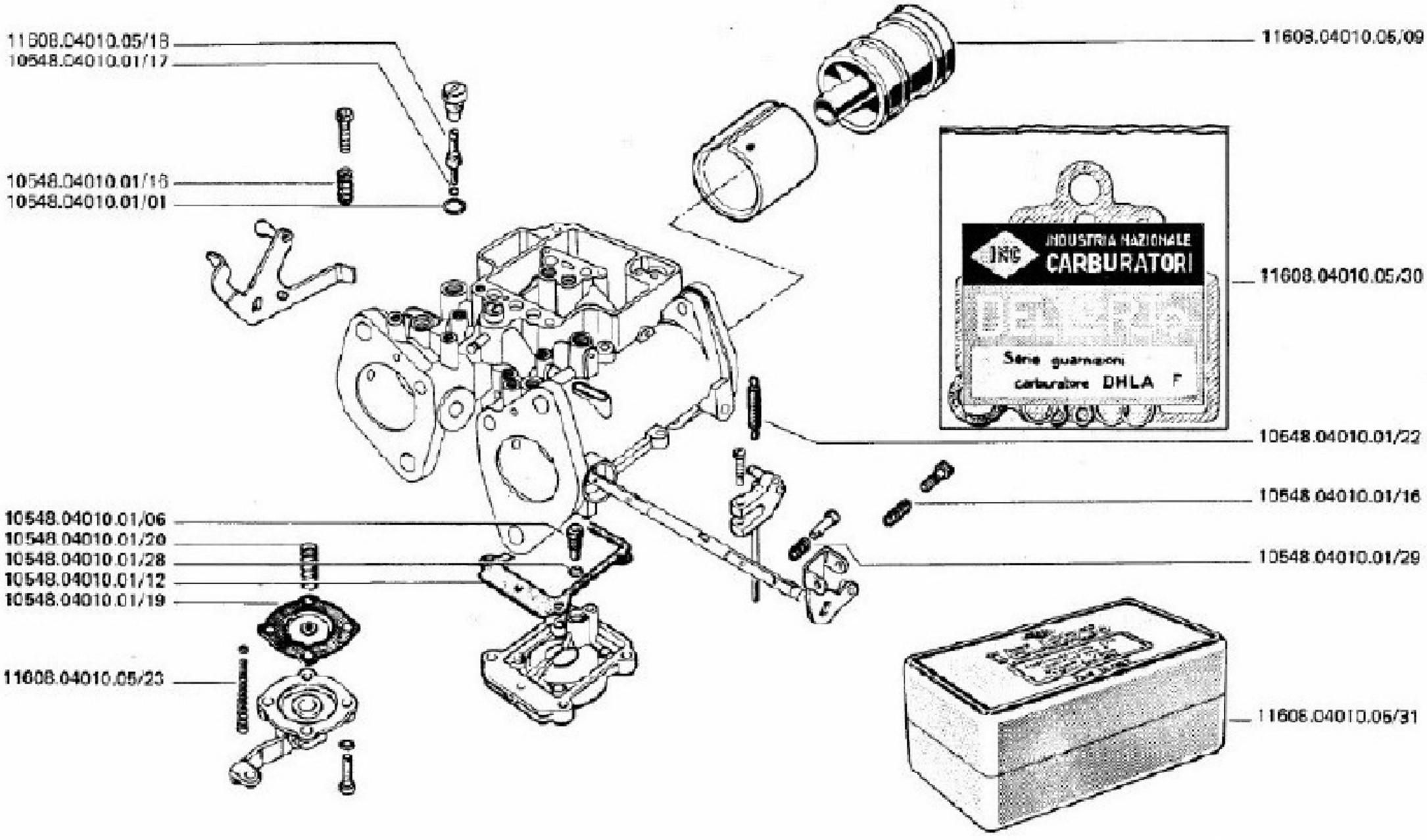

TAV. 02.46/1

CARBURATORE -DELLORTO-
CARBURATEUR
CARBURETTOR
VERGASER
CARBURADOR

MODIFICA	N. ORDINAZIONE	QT.	DENOMINAZIONE	DESIGNATION	DESCRIPTION	BENENNUNG	DENOMINACIONES
	10548.04010.01/01	4	GUARNIZIONE	JOINT D ETANCHEITE	SEAL	DICHTUNG	GUARNICION
	10548.04010.01/06	2	VALVOLA ASPIRAZIONE	SOUPAPE D ADMISSION	INTAKE VALVE	EINLASSVENTIL	VALVULA ASPIRACION
	10548.04010.01/12	2	GUARNIZIONE	JOINT D ETANCHEITE	SEAL	DICHTUNG	GUARNICION
	10548.04010.01/16	4	MOLLA	RESSORT	SPRING	FEDER	RESORTE
	10548.04010.01/17	4	GUARNIZIONE	JOINT D ETANCHEITE	SEAL	DICHTUNG	GUARNICION
	10548.04010.01/19	2	MEMBRANA POMPA	DIAPHRAGME	DIAPHRAGM	MEMBRAN	MEMBRANA
	10548.04010.01/20	2	MOLLA MEMBRANA	RESSORT	SPRING	FEDER	RESORTE
	10548.04010.01/22	2	MOLLA	RESSORT	SPRING	FEDER	RESORTE
	10548.04010.01/28	2	GUARNIZIONE	JOINT D ETANCHEITE	SEAL	DICHTUNG	GUARNICION
	10548.04010.01/29	1	MOLLA PUNTALINO	RESSORT	SPRING	FEDER	RESORTE
	11608.04010.05/09	4	CENTRATORE	CENTREUR	AUX/VENTURI	NEBENTRICHTER	VENTURI CENTRAL
	11608.04010.05/18	4	GETTO POMPA	GICLEUR DE POMPE	PUMP JET	PUMPENDUSE	CHORRO BOMBA
	11608.04010.05/23	2	MOLLA POMPA	RESSORT	SPRING	FEDER	RESORTE
	11608.04010.05/30	1	GRUPPO GUARNIZIONI	COLLECTION DE JOINTS	SEAL KIT	GRUPPE DICHTUNGEN	GRUPO GUARNICIONES
	11608.04010.05/31	1	GRUPPO RICAMBI VARI	COLLECTION-REPARATIO	REPAIR KIT	GRUPPE ERSATZTEILE	GRUPO REPUESTOS

COMANDI DEL CARBURATORE (per vetture g. s.)
COMMANDE DE CARBURATEUR (voitures direction à gauche)
CARBURETTOR CONTROLS (for L.H.D. cars)
VERGASERGESTÄNGE (für L.L)
MANDOS DEL CARBURADOR (para automov. g. izq.)

TAV. 02.62

1ª	EDIZIONE	APRILE	1974
1st	EDITION	APRIL	
1re	EDITION	APRIL	
1.	AUSGABE	APRIL	
1ª	EDICION	ABRIL	

DATA AGGIORNAMENTO

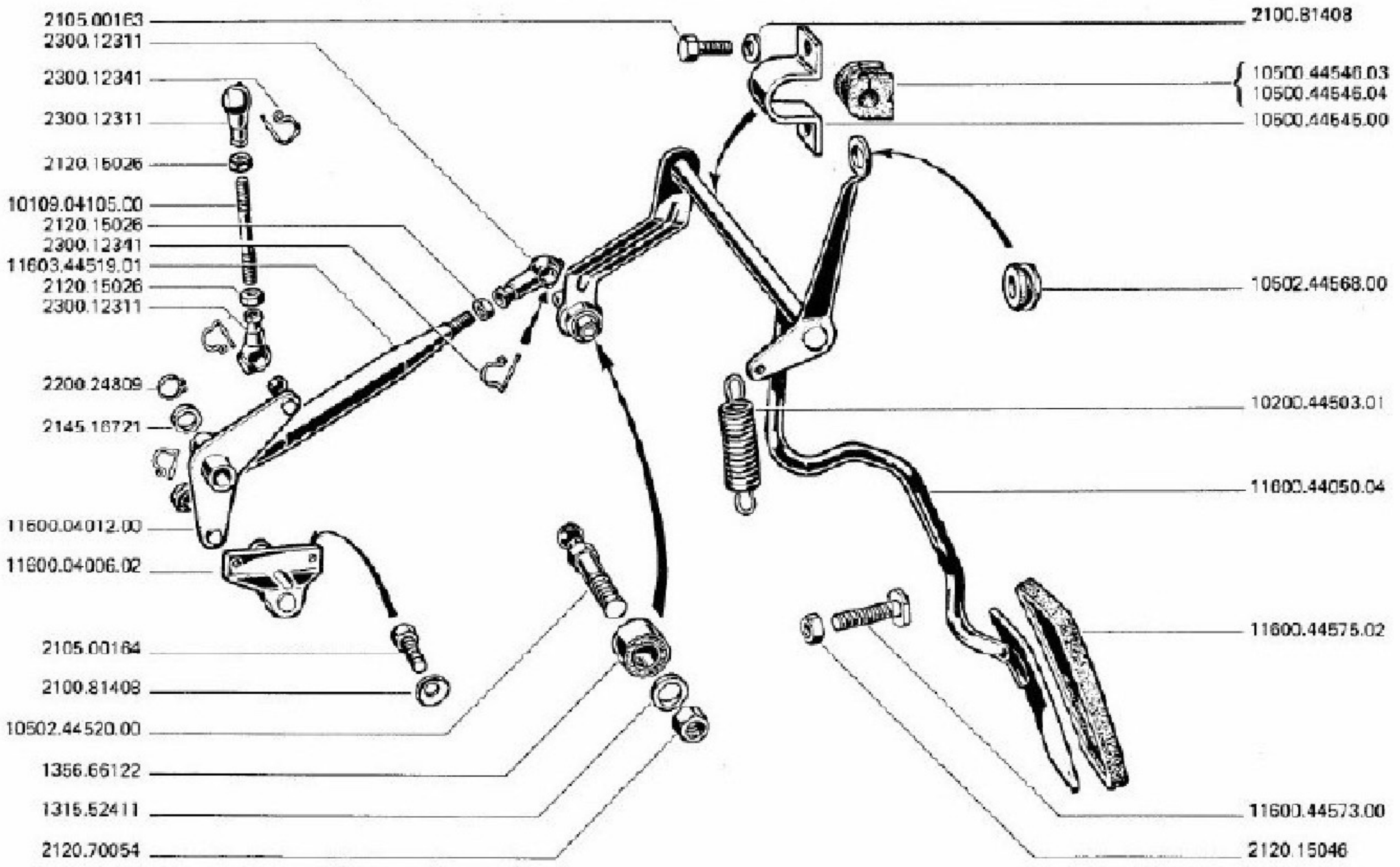

TAV. 02.6270

COMANDI DEL CARBURATORE PER VETT.G.S.
COMMANDE DE CARBURATEUR VOIT. D.A G.
CARBURETTOR CONTROLS FOR L.H.D. CARS
VERGASERGESTANGE FUR LL
MANDOS DEL CARBURADOR PARA AUTOMOV.G.IZQ.

MODIFICA	N. OPERAZIONE	QT.	DENOMINAZIONE	DESIGNATION	DESCRIPTION	BENENNUNG	DENOMINACIONES
	1315.52411	1	RONDELLA	RONDELLE	WASHER	SCHEIBE	ARANDELLA
	1356.66122	1	SILENTBLOC	SILENTBLOC	SILENTBLOCK	SILENTBLOCK	SILENTBLOC
	2100.61408	6	RONDELLA	RONDELLE	WASHER	SCHEIBE	ARANDELLA
	2105.00163	4	VITE	VIS	SCREW	SCHRAUBE	TORNILLO
	2105.00164	2	VITE	VIS	SCREW	SCHRAUBE	TORNILLO
	2120.15026	3	DADO	ECROU	NUT	MUTTER	TUERCA
	2120.15046	1	DADO	ECROU	NUT	MUTTER	TUERCA
	2120.70054	1	DADO	ECROU	NUT	MUTTER	TUERCA
	2145.16721	1	RONDELLA	RONDELLE	WASHER	SCHEIBE	ARANDELLA
	2200.24809	1	ANELLO ELASTICO	JONC DE RETENUE	RETAINER RING	SPRENGRING	ANILLO ELASTICO
	2300.12311	3	TESTA SFERICA	ARTICULATION A ROTUL	SOCKET JOINT	KUGELPFANNE	CABEZA ESFERICA
	2300.12341	4	MOLLETTA	AGRAFE	CLIP	KLEMMSTUECK	MUELLECITO
	10109.04105.00	1	TIRANTE	BIELLETTE	ROD	ZUGSTANGE	TIRANTE
	10200.44503.01	1	MOLLA	RESSORT	SPRING	FEDER	RESORTE
	10500.44545.00	2	CAVALLOTTO	CAVALIER	LIFT BRACKET	LAGERBOCK	CABALLETTE
	10500.44546.03	2	BOCCOLA	BAGUE	BUSHING	BUECHSE	CASQUILLO
	10500.44546.04	2	BOCCOLA	BAGUE	BUSHING	BUECHSE	CASQUILLO
	10502.44520.00	1	GIUNTO SFERICO	ROTULE DE TIMONERIE	LINKAGE BALL JOINT	KUGELZAPFEN	ROTULA VARILLAJE
	10502.44568.00	1	GOMMINO	CAOUTCHOUC	GROMMET	GUMMITEIL	GOMITA
	11600.04006.02	1	SUPPORTO	SUPPORT	SUPPORT	LAGERUNG	SOPORTE
	11600.04012.00	1	LEVA RINVIO	RENVOI	JOLER	UMLENKER	TRANSMISION

COMANDI DEL CARBURATORE (per vetture g. s.)
COMMANDE DE CARBURATEUR (voitures direction à gauche)
CARBURETTOR CONTROLS (for L.H.D. cars)
VERGASERGESTÄNGE (für LL)
MANDOS DEL CARBURADOR (para automov. g. izq.)

TAV. 02.62

1ª	EDIZIONE	1974	APRILE
1ère	EDITION		AVRIL
1st	EDITION		APRIL
1.	AUSGABE		APRIL
1ra	EDICION		ABRIL

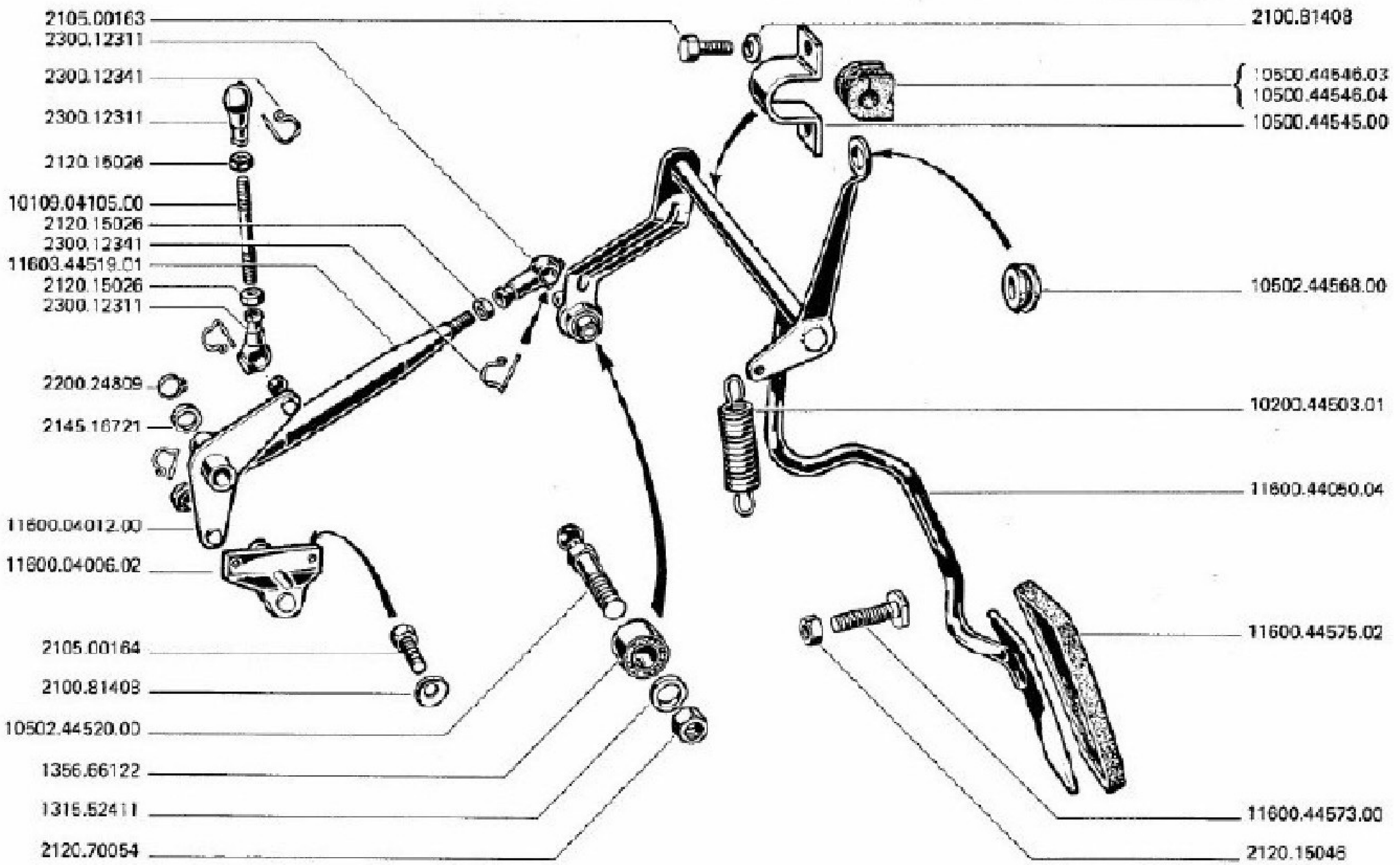

TAV. 02.62/0

COMANDI DEL CARBURATORE PER VETT.G.S.
COMMANDE DE CARBURATEUR VOIT. D.A G.
CARBURETTOR CONTROLS FOR L.H.D. CARS
VERGASERGESTANGE FUR LL
MANDOS DEL CARBURADOR PARA AUTOMOV.G.IZQ.

CODICE	N. ORDINAZIONE	QT.	DENOMINAZIONE	DESIGNATION	DESCRIPTION	BENENNUNG	DESIGNACIONES
	11600.44050.04	1	GRUPPO LEVE	ENSEMBLE LEVIERS	LEVER ASSY	GRUPPE HEBEL	GRUPO PALANCAS
	11600.44573.00	1	VITE REG.CORSA PEDAL	VIS DE REGLAGE	ADJUSTING SCREW	EINSTELLSCHRAUBE	TORNILLO DE AJUSTE
	11600.44575.02	1	COPRIPEDALE	COUVRE-PEDALES	PEDAL COVER	PEDALBELAG	CUBREPEDAL
	11603.44519.01	1	TIRANTE	BIELLETTE	ROD	ZUGSTANGE	TIRANTE

* ALTERNATIVA ALTERNATIVE ALTERNATIVE WAHLWEISE ALTERNATIVA

COMANDI DEL CARBURATORE (per vett. g. d.)
COMMANDE DE CARBURATEUR (voitures direction à droite)
CARBURETTOR CONTROLS (for R.H.D. cars)
VERGASERGESTÄNGE (für RL)
MANDOS DEL CARBURADOR (para automov. g. der.)

TAV. 02.63

1ª	EDIZIONE	APRILE	1974
1ère	EDITION	AVRIL	
1st	EDITION	APRIL	
-	AUSGABE	APRIL	
1ª	EDICION	ABRIL	

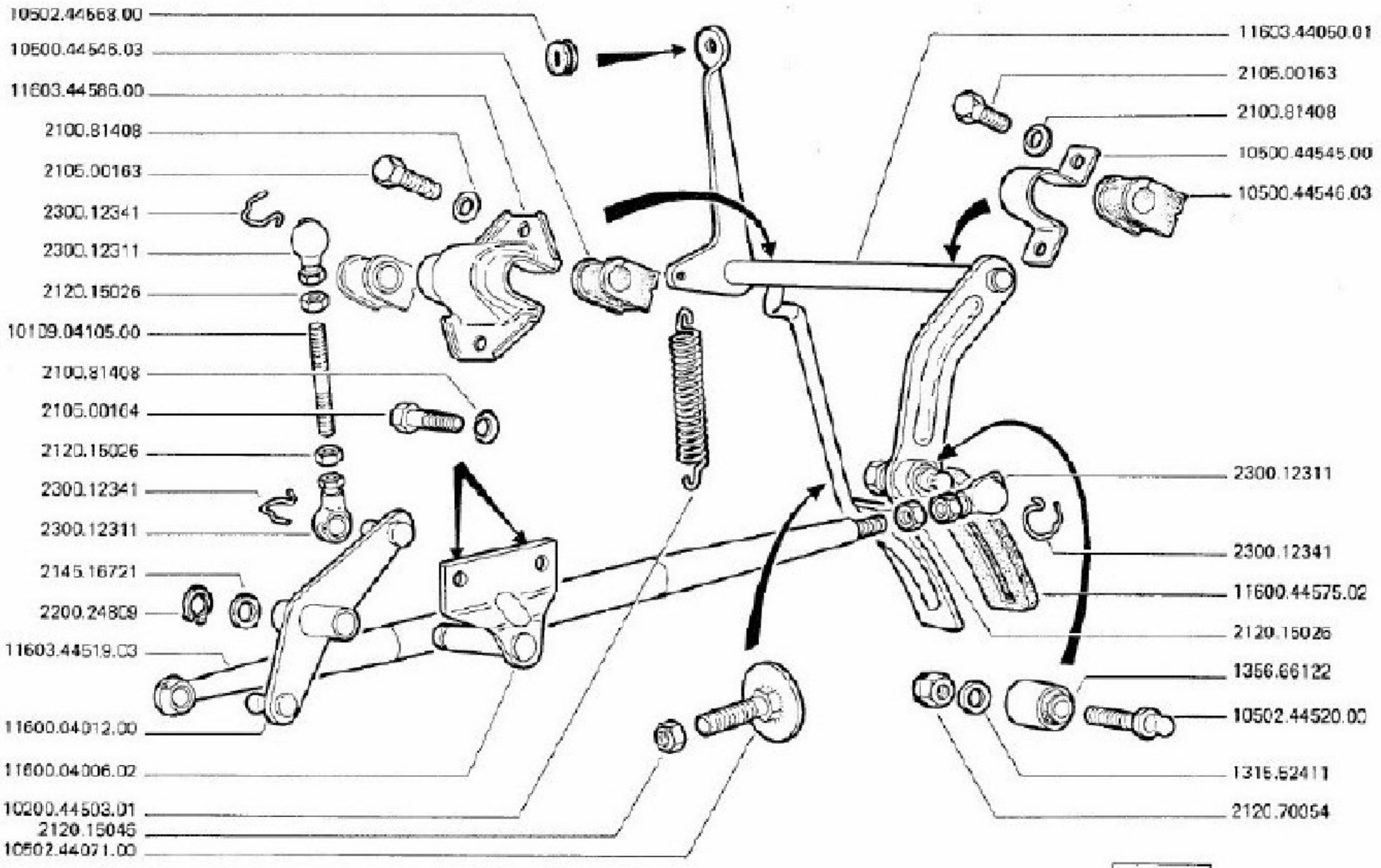

M. 0393

Alfetta GT

TAV. 02.63/D

COMANDI DEL CARBURATORE PER VETT.G.D.
COMMANDE DE CARBURATEUR VOIT. D.A D.
CARBURETTOR CONTROLS FOR R.M.D. CARS
VERGASERGESTANGE FUR RL
MANDOS DEL CARBURADOR PARA AUTOMOV.G.DER.

VOCITICA	N. DENOMINAZIONE	QT.	DENOMINAZIONE	DESIGNATION	DESCRIPTION	BENENNUNG	DENOMINACION
	1315.52411	1	RONDELLA	RONDELLE	WASHER	SCHEIBE	ARANDELLA
	1356.66122	1	SILENTBLOC	SILENTBLOC	SILENTBLOCK	SILENTBLOCK	SILENTBLOC
	2100.81408	6	RONDELLA	RONDELLE	WASHER	SCHEIBE	ARANDELLA
	2105.00163	4	VITE	VIS	SCREW	SCHRAUBE	TORNILLO
	2105.00164	2	VITE	VIS	SCREW	SCHRAUBE	TORNILLO
	2120.15026	3	DADO	ECROU	NUT	MUTTER	TUERCA
	2120.15046	1	DADO	ECROU	NUT	MUTTER	TUERCA
	2120.70054	1	DADO	ECROU	NUT	MUTTER	TUERCA
	2145.16721	1	RONDELLA	RONDELLE	WASHER	SCHEIBE	ARANDELLA
	2200.24809	1	ANELLO ELASTICO	JONC DE RETENUE	RETAINER RING	SPRENGRING	ANILLO ELASTICO
	2300.12311	3	TESTA SFERICA	ARTICULATION A ROTUL	SOCKET JOINT	KUGELPFANNE	CABEZA ESFERICA
	2300.12341	4	MOLLETTA	AGRAFE	CLIP	KLEMMSTUECK	MUELLECITO
	10109.04105.00	1	TIRANTE	BIELLETTE	ROD	ZUGSTANGE	TIRANTE
	10200.44503.01	1	MOLLA	RESSORT	SPRING	FEDER	RESORTE
	10500.44545.00	1	CAVALLOTTO	CAVALIER	LIFT BRACKET	LAGERBOCK	CABALLETTE
	10500.44546.03	3	BOCCOLA	BAGUE	BUSHING	BUECHSE	CASQUILLO
	10502.44071.00	1	VITE REG.CORSA PEDAL	VIS DE REGLAGE	ADJUSTING SCREW	EINSTELLSCHRAUBE	TORNILLO DE AJUSTE
	10502.44520.00	1	GIUNTO SFERICO	ROTULE DE TIMONERIE	LINKAGE BALL JOINT	KUGELZAPFEN	ROTULA VARILLAJE
	10502.44568.00	1	GOMMINO	CAOUTCHOUC	GROMMET	GUMMITEIL	GOMITA
	11600.04006.02	1	SUPPORTO	SUPPORT	SUPPORT	LAGERUNG	SOPORTE
	11600.04012.00	1	LEVA RINVIO	RENVOI	JOLER	UMLENKER	TRANSMISION

COMANDI DEL CARBURATORE (per vett. g. d.)
COMMANDE DE CARBURATEUR (voitures direction à droite)
CARBURETTOR CONTROLS (for R.H.D. cars)
VERGASERGESTÄNGE (für RL)
MANDOS DEL CARBURADOR (para automov. g. der.)

TAV. 02.63

1ª	EDIZIONE	1974	APRILE
1st	EDITION		AVRIL
1st	EDITION		APRIL
1.	AUSGABE		APRIL
1ª	EDICION		ABRIL

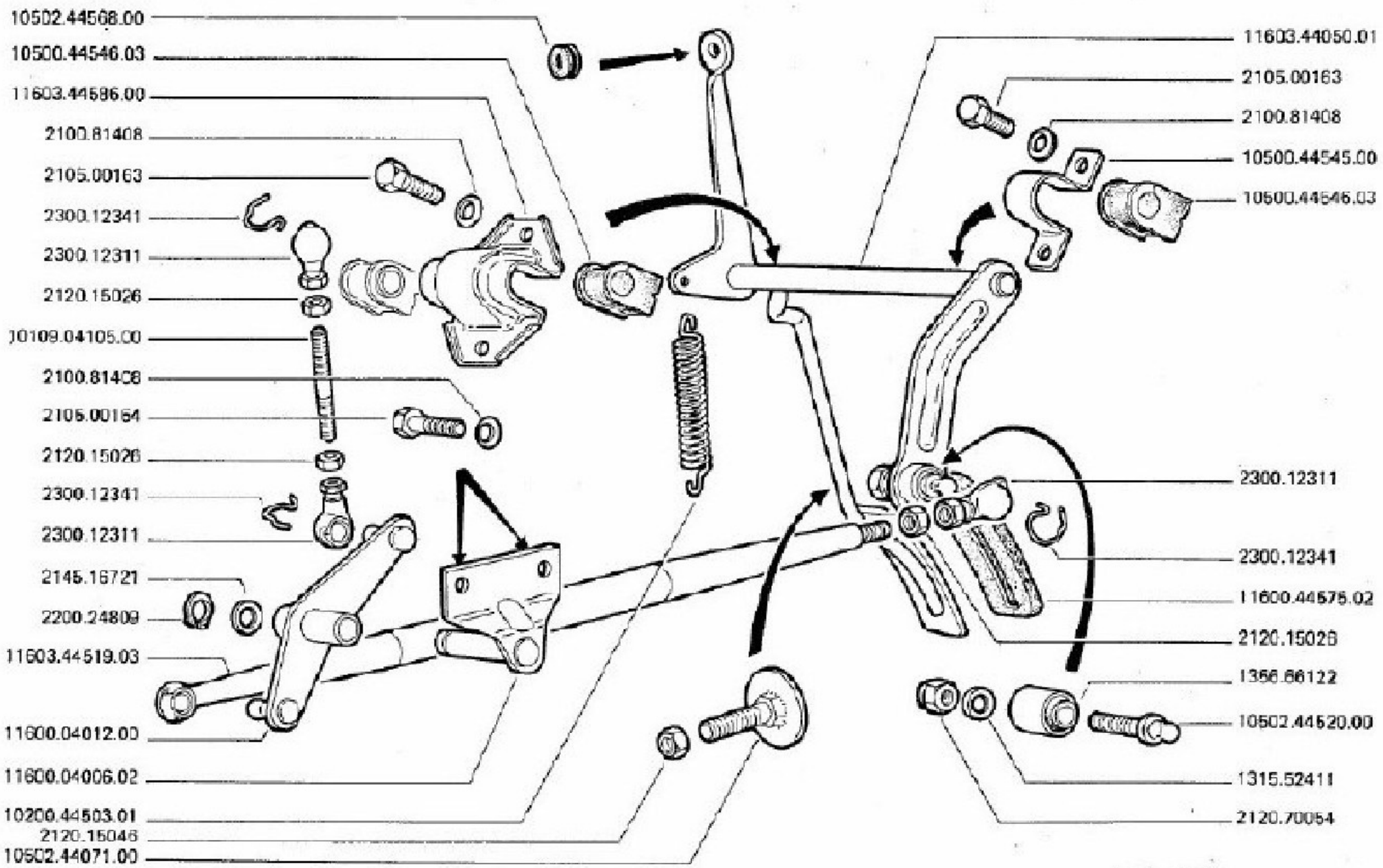

Alfetta GT

TAV. 02.63/0

COMANDI DEL CARBURATORE PER VETT.G.D.
COMMANDE DE CARBURATEUR VOIT. D.A D.
CARBURETTOR CONTROLS FOR R.H.D. CARS
VERGASERGESTANGE FUR RL
MANDOS DEL CARBURADOR PARA AUTOMOV.G.DER.

MODIFICA	N. DESIGNAZIONE	QT.	DENOMINAZIONE	DÉSIGNATION	DESCRIPTION	BENENNUNG	DENOMINACIONES
	11600.44575.02	1	COPRIPEDALE	COUVRE-PEDALES	PEDAL COVER	PEDALBELAG	CUBREPEDAL
	11603.44050.01	1	GRUPPO LEVE	ENSEMBLE LEVIERS	LEVER ASSY	GRUPPE HEBEL	GRUPO PALANCAS
	11603.44519.03	1	TIRANTE	BIELLETTE	ROD	ZUGSTANGE	TIRANTE
	11603.44586.00	1	CAVALLOTTO	CAVALIER	LIFT BRACKET	LAGERBOCK	CABALLETTE

COMANDI A MANO ACCELERATORE E STARTER
COMMANDE A MAIN ACCELERATEUR ET STARTER
ACCELERATOR AND CHOKE CONTROL
HANDGAS UND STARTERBETÄTIGUNG
MANDOS DE MANO ACCELERADOR Y STARTER

TAV. 02.64

1ª EDIZIONE - APRILE 1974
1st EDITION - APRIL
1re EDITION - AVRIL
1. AUSGABE - APRIL
1ª EDICION - ABRIL

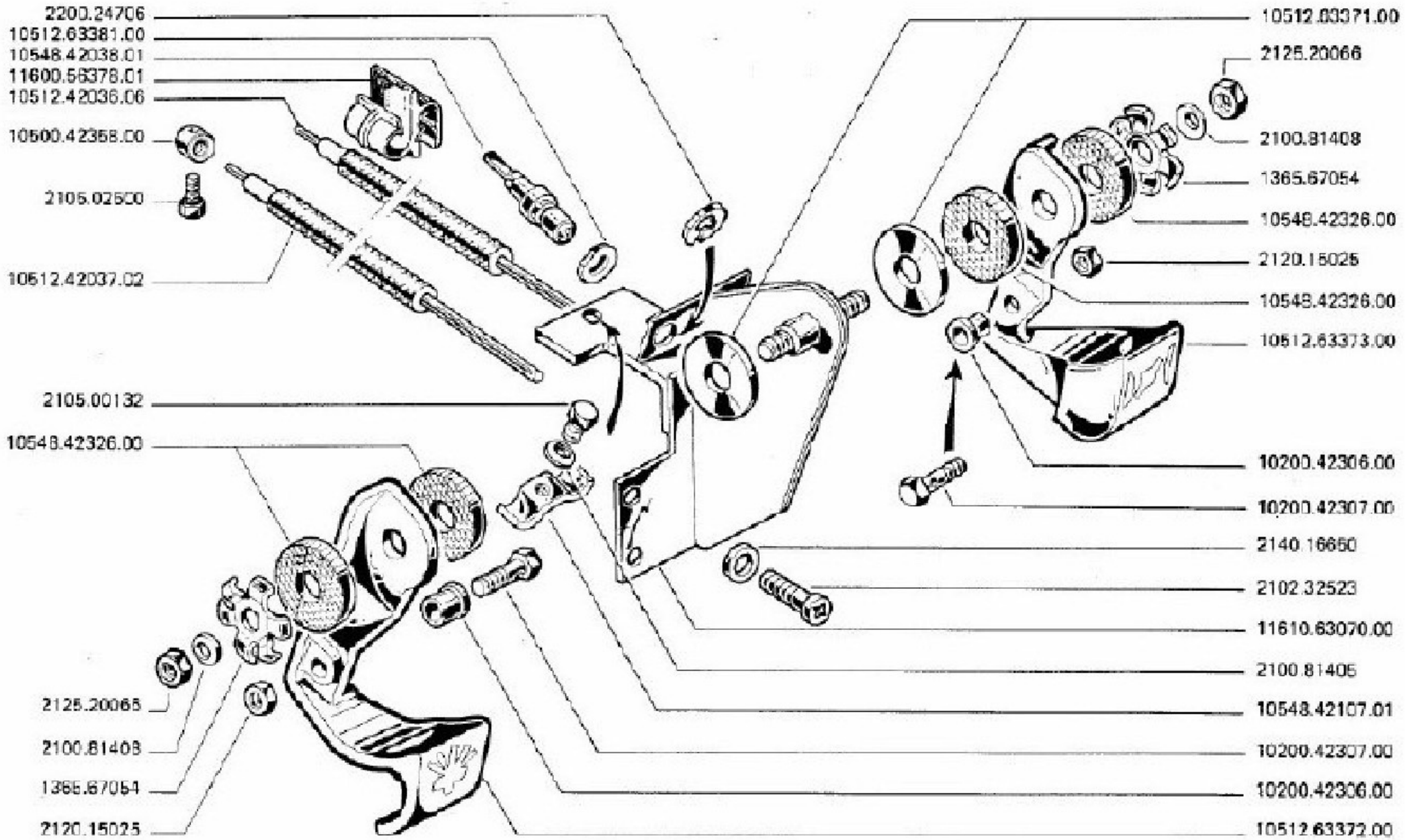

TAV. 02.64/0

COMANDI A MANO ACCELERATORE E STARTER
COMMANDE A MAIN ACCELERATEUR ET STARTER
ACCELERATOR AND CHOKE CONTROL
HANDGAS UND STARTERBETATIGUNG
MANDOS DE MANO ACCELERADOR Y STARTER

MODIFICA	N. ORDINAZIONE	QT.	DENOMINAZIONE	DESIGNATION	DESCRIPTION	BENENNUNG	DESIGNACIONES
	1365.67054	2	RONDELLA	RONDELLE	WASHER	SCHEIBE	ARANDELLA
	2100.81405	1	RONDELLA	RONDELLE	WASHER	SCHEIBE	ARANDELLA
	2100.81408	2	RONDELLA	RONDELLE	WASHER	SCHEIBE	ARANDELLA
	2102.32523	4	VITE	VIS	SCREW	SCHRAUBE	TORNILLO
	2105.00132	1	VITE	VIS	SCREW	SCHRAUBE	TORNILLO
	2105.02500	1	VITE	VIS	SCREW	SCHRAUBE	TORNILLO
	2120.15025	2	DADO	ECROU	NUT	MUTTER	TUERCA
	2125.20066	2	DADO	ECROU	NUT	MUTTER	TUERCA
	2140.16650	4	RONDELLA	RONDELLE	WASHER	SCHEIBE	ARANDELLA
	2200.24706	1	ANELLO ELASTICO	JONC DE RETENUE	RETAINER RING	SPRENGRING	ANILLO ELASTICO
	10200.42306.00	2	BUSSOLA	BAGUE	BUSHING	HUELSE	BUJE
	10200.42307.00	2	VITE	VIS	SCREW	SCHRAUBE	TORNILLO
	10500.42358.00	1	SERRAFILO	SERRE-FILS	CABLE CLAMP	KABELKLEMME	BORNES
	10512.42036.06	1	FLESS. ACCELERATORE	CABLE	WIRE	ZUGDRAHT	BOWDEN
	10512.42037.02	1	FLESS.STARTER	CABLE	WIRE	ZUGDRAHT	BOWDEN
	10512.63371.00	2	RONDELLA	RONDELLE	WASHER	SCHEIBE	ARANDELLA
	10512.63372.00	1	LEVA STARTER	STARTER	CHOKE	CHOKE	STARTER
	10512.63373.00	1	LEVA ACCELERATORE	ACCELERATEUR A MAIN	HAND THRITTLE	HANDGASHEBEL	ACELERADOR DE MANO
	10512.63381.00	1	RONDELLA	RONDELLE	WASHER	SCHEIBE	ARANDELLA
	10548.42038.01	1	INTERRUTTORE STARTER	INTERRUPTEUR	SWITCH	SCHALTER	INTERRUPTOR
	10548.42107.01	1	PIASTRINA	PLAQUETTE	PLATE	PLAETTCHEN	PLAQUITA

COMANDI A MANO ACCELERATORE E STARTER
COMMANDE A MAIN ACCELERATEUR ET STARTER
ACCELERATOR AND CHOKE CONTROL
HANDGAS UND STARTERBETÄTIGUNG
MANDOS DE MANO ACCELERADOR Y STARTER

TAV. 02.64

1ª	EDIZIONE	APRILE	1974
1st	EDITION	APRIL	
1re	EDITION	AVRIL	
1.	AUSGABE	APRIL	
1ª	EDICION	ABRIL	

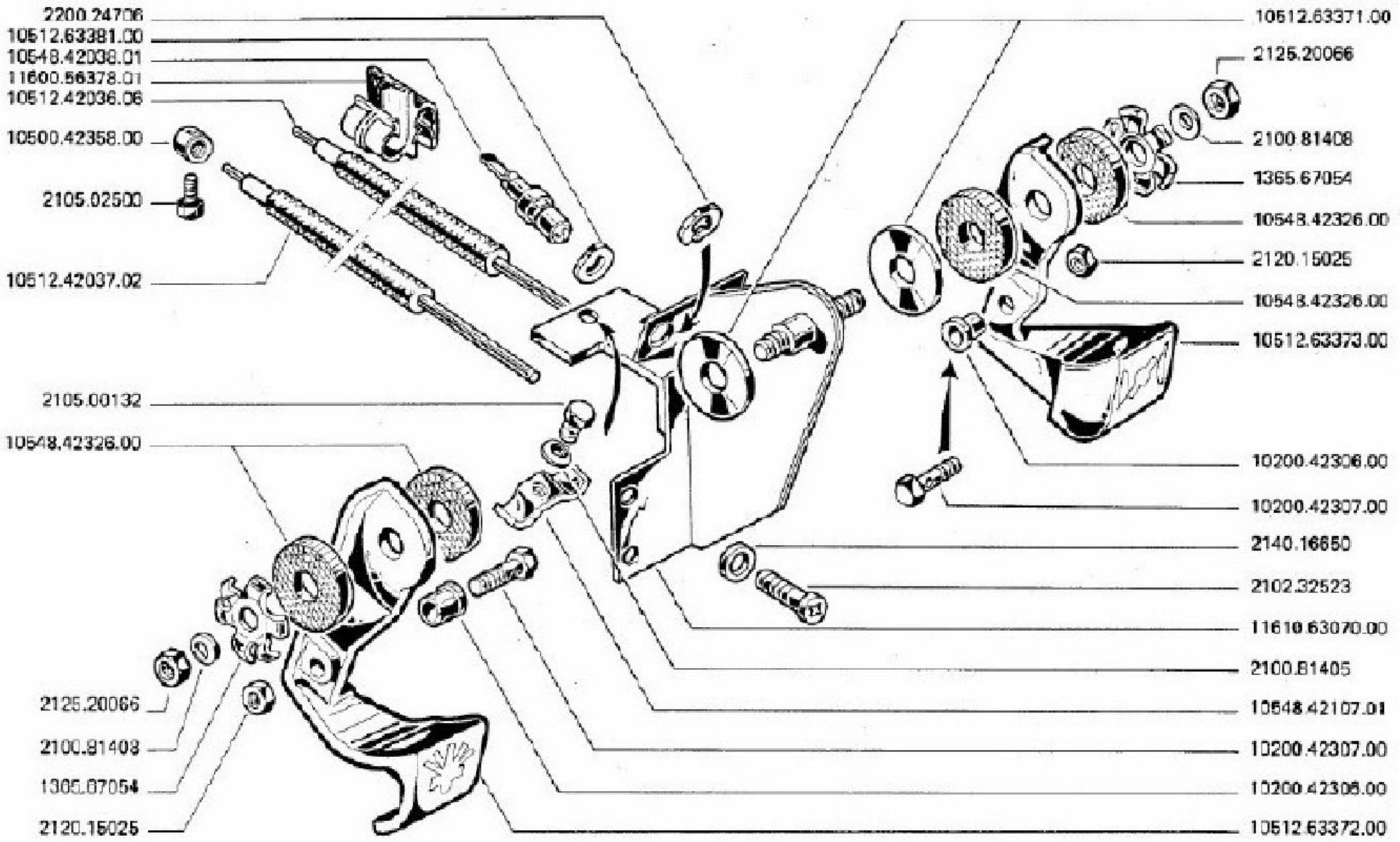

TAV. 02.6470

COMANDI A MANO ACCELERATORE E STARTER
COMMANDE A MAIN ACCELERATEUR ET STARTER
ACCELERATOR AND CHOKE CONTROL
HANDGAS UND STARTERBETATIGUNG
MANDOS DE MANO ACCELERADOR Y STARTER

MODIFICA	N. ORDINAZIONE	QT.	DENOMINAZIONE	DÉSIGNATION	DESCRIPTION	BENENNUNG	DENOMINACIONES
	10548.42326.00	4	RONDELLA	RONDELLE	WASHER	SCHEIBE	ARANDELLA
	11600.56378.01	1	SQUADRETTA ANCORAGGI	ETRIER DE RESSORT	SPRING CLIP	FEDERKLAMMER	BRIDA DE BALLESTRA
	11610.63070.00	1	SUPPORTO	SUPPORT	SUPPORT	LAGERUNG	SOPORTE

PRESE E FILTRO ARIA
CONDUITS ET FILTRE A AIR
AIR DUCT AND CLEANER
SAUGGERÄUSCHDÄMPFER UND LUFTFILTER
TOMAS Y FILTRO AIRE

TAV. 02.70

1	EDIZIONE	1974	APRILE
	EDITION		AVRIL
	EDITION		APRIL
	AUSGABE		APRIL
	EDICION		ABRIL

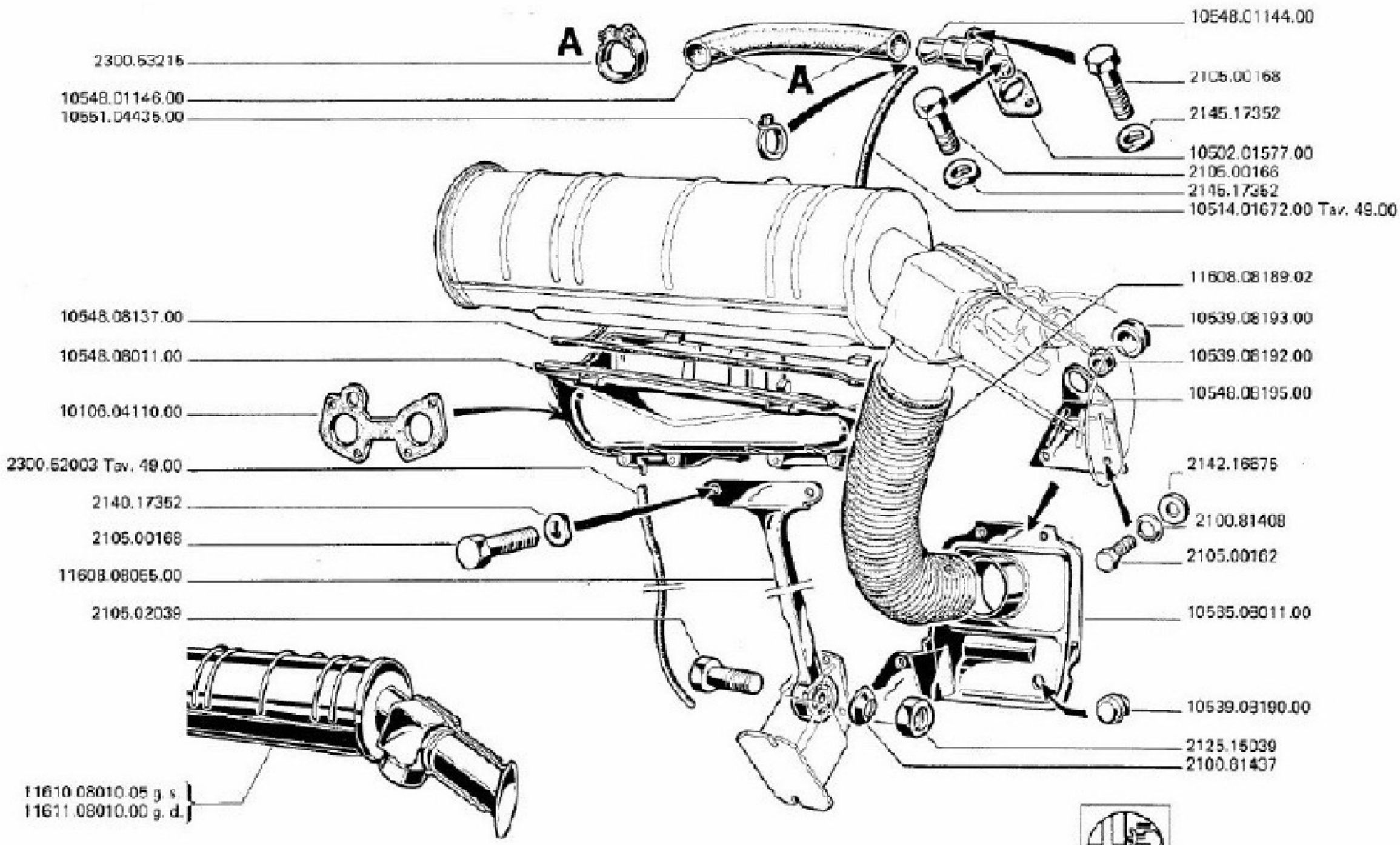

N. 6 507

Alfetta GT

TAV. 02.70/0

PRESE E FILTRO ARIA
CONDUITS ET FILTRE A AIR
AIR DUCT AND CLEANER
SAUGGERAUSCHDAMPFER UND LUFTFILTER
TOMAS Y FILTRO AIRE

MODIFICA	N. ORDINAZIONE	QT.	DENOMINAZIONE	DESIGNATION	DESCRIPTION	BENENNUNG	DENOMINACION
	2100.81408	2	RONDELLA	RONDELLE	WASHER	SCHEIBE	ARANDELLA
	2100.81437	1	RONDELLA	RONDELLE	WASHER	SCHEIBE	ARANDELLA
	2105.00162	2	VITE	VIS	SCREW	SCHRAUBE	TORNILLO
	2105.00166	1	VITE	VIS	SCREW	SCHRAUBE	TORNILLO
	2105.00168	3	VITE	VIS	SCREW	SCHRAUBE	TORNILLO
	2105.02039	1	VITE	VIS	SCREW	SCHRAUBE	TORNILLO
	2125.15039	1	DADO	ECROU	NUT	MUTTER	TUERCA
	2140.17352	2	RONDELLA	RONDELLE	WASHER	SCHEIBE	ARANDELLA
	2142.16675	2	RONDELLA	RONDELLE	WASHER	SCHEIBE	ARANDELLA
	2145.17352	2	RONDELLA	RONDELLE	WASHER	SCHEIBE	ARANDELLA
	2300.52003	1	TUBETTO SCARICO	TUBE	PIPE	ROEHRCHEN	TUBITO
	2300.53215	2	FASCETTA	COLLIER DE DURITE	HOSE CLIP	SCHLAUCHBINDER	ABRAZADERA SUJEC.TUB
	10106.04110.00	2	GUARNIZIONE	JOINT D ETANCHEITE	SEAL	DICHTUNG	GUARNICION
	10502.01577.00	1	GUARNIZIONE	JOINT D ETANCHEITE	SEAL	DICHTUNG	GUARNICION
	10539.08190.00	1	GOMMINO	CAOUTCHOUC	GROMMET	GUMMITEIL	GOMITA
	10539.08192.00	1	DISTANZIALE	ENTRETOISE	SPACER	ABSTANDSTUECK	SEPARADOR
	10539.08199.00	1	GOMMINO	CAOUTCHOUC	GROMMET	GUMMITEIL	GOMITA
	10548.01144.00	1	SUPPORTO SFIATO	SUPPORT	SUPPORT	LAGERUNG	SOPORTE
	10548.08011.00	1	PRESA ARIA	PRISE D AIR	AIR INTAKE	LUFTEINLASS	TOMA DE AIRE
	10548.08137.00	1	GUARNIZIONE	JOINT D ETANCHEITE	SEAL	DICHTUNG	GUARNICION
	10548.08195.00	1	STAFFA SUPPORTO	ETRIER DE RESSORT	SPRING CLIP	FEDERKLAMMER	BRIDA DE BALLESTRA

PRESE E FILTRO ARIA
CONDUITS ET FILTRE A AIR
AIR DUCT AND CLEANER
SAUGGERÄUSCHDÄMPFER UND LUFTFILTER
TOMAS Y FILTRO AIRE

TAV. 02.70

1ª	EDIZIONE	APRILE	1974
1st	EDITION	AVRIL	
1st	EDITION	APRIL	
1.	AUSGABE	APRIL	
1ª	EDICION	ABRIL	

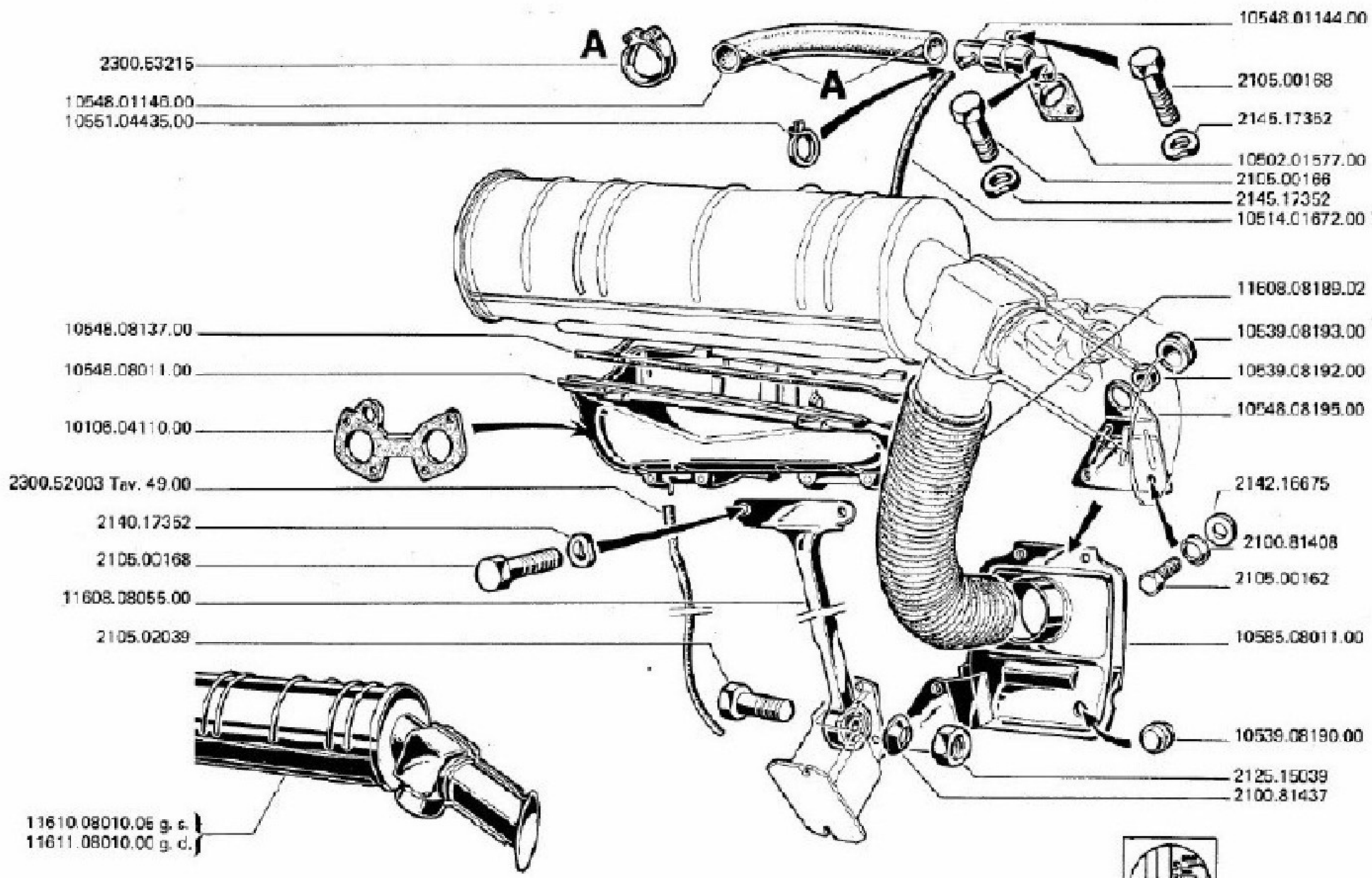

N. 6507

Alfetta GT

TAV. 02.70/0

PRESE E FILTRO ARIA
CONDUITS ET FILTRE A AIR
AIR DUCT AND CLEANER
SAUGGERAUSCHCAMPFER UND LUFTFILTER
TOMAS Y FILTRO AIRE

MODIFICA	N. ORDINAZIONE	QT.	DENOMINAZIONE	DÉSIGNATION	DESIGNATION	BENENNUNG	DENOMINACIONES
	10551.04435.00	1	FASCETTA	COLLIER DE DURITE	HOSE CLIP	SCHLAUCHBINDER	ABRAZADERA SUJEC.TUB
	10585.08011.00	1	PRESA ARIA CALDA	PRISE AIR CHAUD	AIR HORN	VORWAERMSTUTZEN	TOMA AIRE CALIENTE
	11608.08055.00	1	PUNTONE	BRAS DE POUSSEE	STRUT	STUETZSTREBE	PUNTAL
	11608.08189.02	1	TUBO	TUXAU A AIR SOUPLE	AIR HOSE	LUFTSCHLAUCH	TUBO FLEXIBILE AIRE
	11610.08010.05	* 1	FILTRO FIAMM	FILTRE A AIR	AIR CLEANER	LUFTFILTER	FILTRO AIRE
	11611.08010.00	. 1	FILTRO FIAMM	FILTRE A AIR	AIR CLEANER	LUFTFILTER	FILTRO AIRE

* PER G.S.
. PER G.D.

PRESE E FILTRO ARIA
CONDUITS ET FILTRE A AIR
AIR DUCT AND CLEANER
SAUGGERAUSCHCAMPFER UND LUFTFILTER
TOMAS Y FILTRO AIRE

TAV. 02.70/1

1	EDIZIONE	APRILE	1974
	EDITION	AVRIL	
	EDITION	APRIL	
	EDICION	ABRIL	

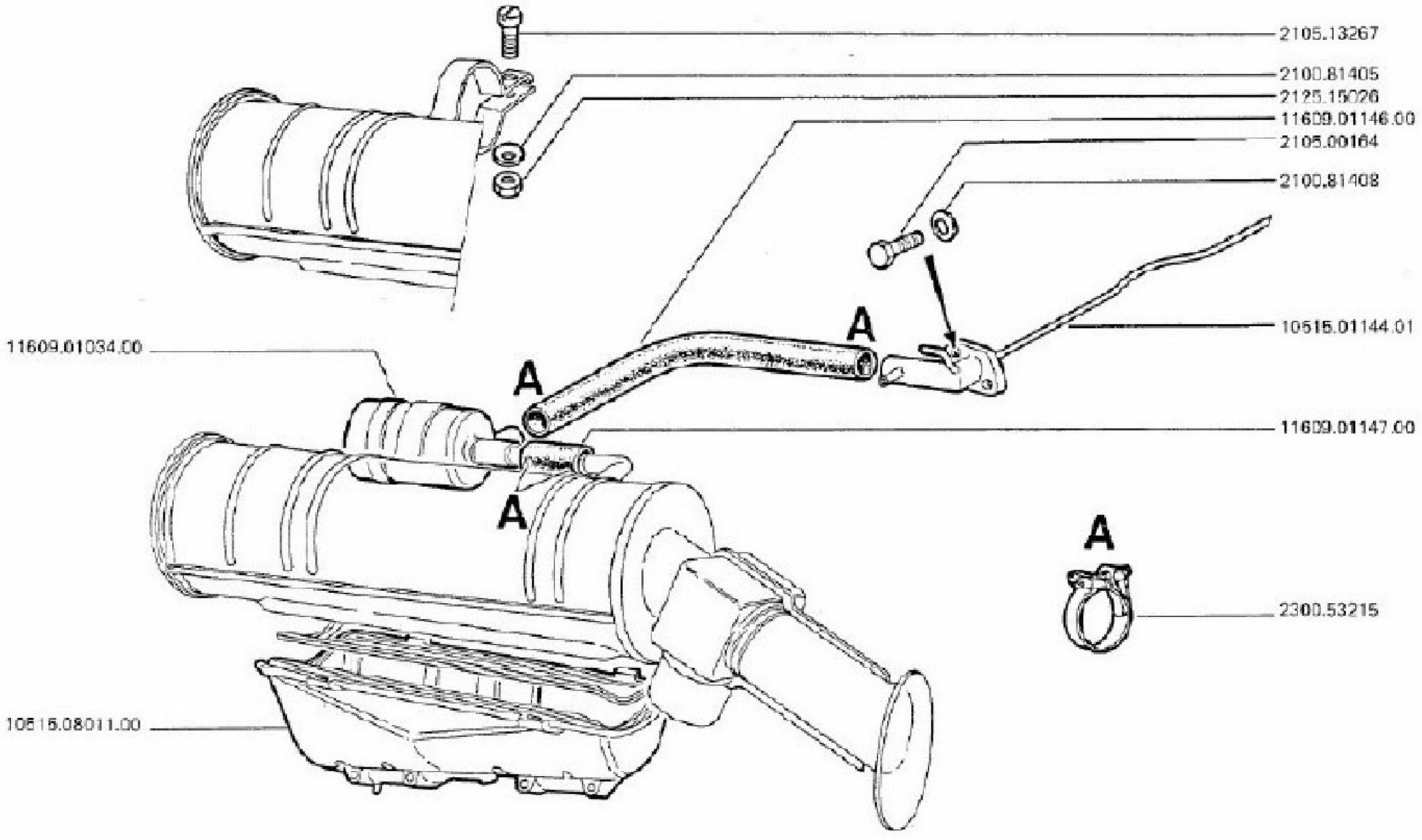

TAV. 02.70/1

PRESE E FILTRO ARIA
CONDUITS ET FILTRE A AIR
AIR DUCT AND CLEANER
SAUGGERAUSCHDAMPFER UND LUFTFILTER
TOMAS Y FILTRO AIRE

MODIFICA	N. ORDINAZIONE		QT.	DENOMINAZIONE	DESIGNATION	DESCRIPTION	BENENNUNG	DENOMINACIONES
	2100.81405	*	1	RONDELLA	RONDELLE	WASHER	SCHEIBE	ARANDELLA
	2100.81408	*	2	RONDELLA	RONDELLE	WASHER	SCHEIBE	ARANDELLA
	2105.00164	*	2	VITE	VIS	SCREW	SCHRAUBE	TORNILLO
	2105.13267	*	1	VITE	VIS	SCREW	SCHRAUBE	TORNILLO
	2125.15026	*	1	DADO	ECROU	NUT	MUTTER	TUERCA
	2300.53215	*	4	FASCETTA	COLLIER DE DURITE	HOSE CLIP	SCHLAUCHBINDER	ABRAZADERA SUJEC.TUB
	10515.01144.01	*	1	SUPPORTO PER SFIATO	SUPPORT	SUPPORT	LAGERUNG	SOPORTE
	10515.08011.00	*	1	PRESA ARIA	PRISE D AIR	AIR INTAKE	LUFTEINLASS	TOMA DE AIRE
	11609.01034.00	*	1	SEPARATORE OLIO	SEPARATEUR HUILE	OIL SEPARATOR	OELABSCHEIDER	SEPARADOR ACEITE
	11609.01146.00	*	1	TUBO AL FILTRO	TUBE	PIPE	ROHR	TUBO
	11609.01147.00	*	1	TUBO AL SEPARATORE	TUBE	PIPE	ROHR	TUBO

COLLETTORE D'ALIMENTAZIONE
COLLECTEUR D'ALIMENTATION
INTAKE MANIFOLD
ANSAUGKRUMMER
COLECTOR DE ALIMENTACION

TAV. 02.80

1	EDIZIONE	1974	APRILE
	EDITION		AVRIL
	EDITION		APRIL
	AUSGABE		APRIL
	EDICION		ABRIL

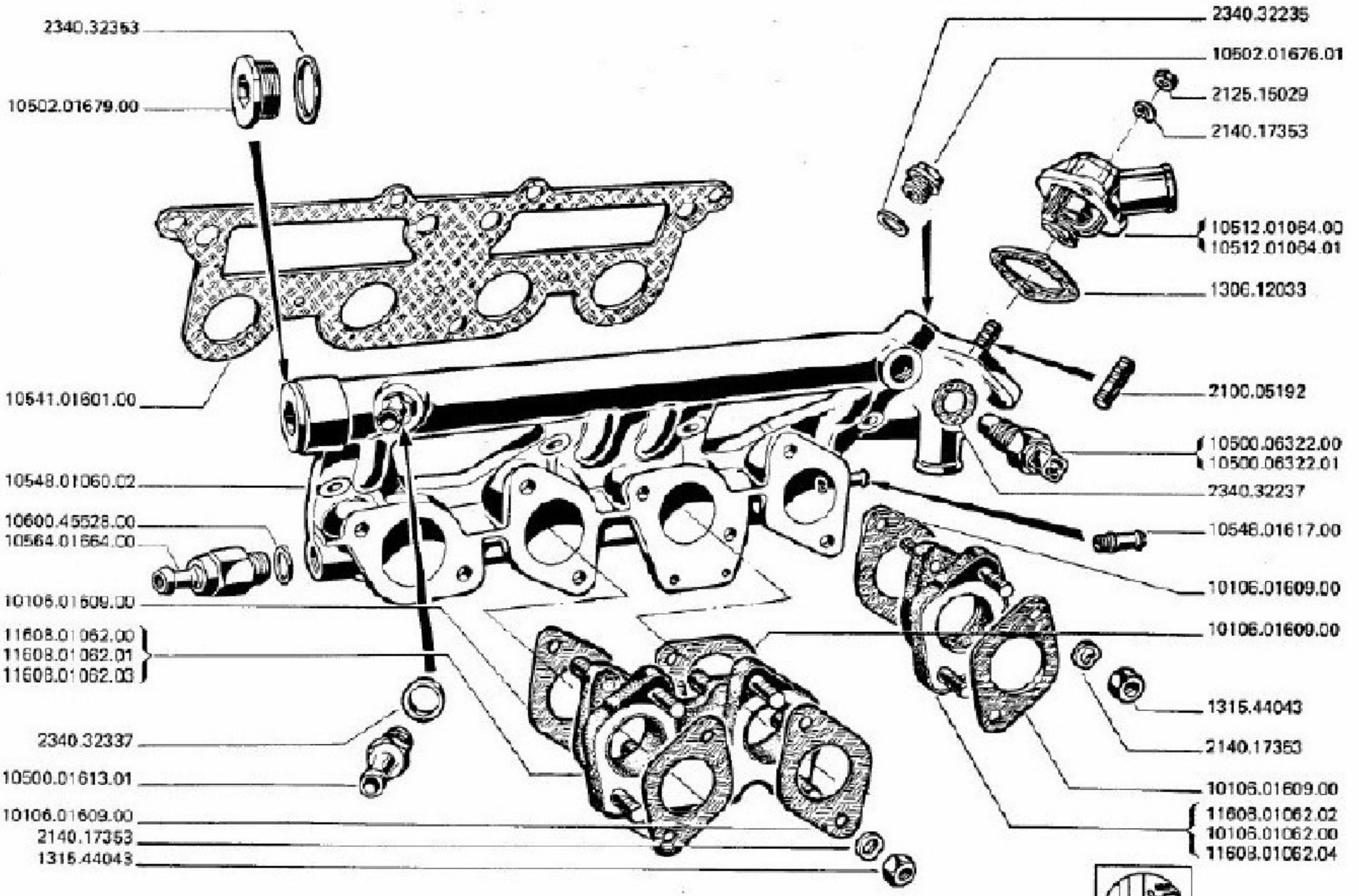

N. 7001

Alfetta GT

TAV. 02.80/0

COLLETTORE O ALIMENTAZIONE
COLLECTEUR O ALIMENTATION
INTAKE MANIFOLD
ANSAUGKRUMMER
COLECTOR DE ALIMENTACION

MODIFICA	N. ORDINAZIONE	QT.	DENOMINAZIONE	DESIGNATION	DESCRIPTION	BENENNUNG	DENOMINACIONES
	1306.12038	1	GUARNIZIONE	JOINT D ETANCHEITE	SEAL	DICHTUNG	GUARNICION
	1315.44043	16	DADO	ECROU	NUT	MUTTER	TUERCA
	2100.05192	2	PRIGIONIERO	GOUJON	STUD	STIFTSCHRAUBE	PRISIONERO
	2125.15029	2	DADO	ECROU	NUT	MUTTER	TUERCA
	2140.17353	18	RONDELLA	RONDELLE	WASHER	SCHEIBE	ARANDELLA
	2340.32235	1	GUARNIZIONE	JOINT D ETANCHEITE	SEAL	DICHTUNG	GUARNICION
	2340.32237	1	GUARNIZIONE	JOINT D ETANCHEITE	SEAL	DICHTUNG	GUARNICION
	2340.32337	1	GUARNIZIONE	JOINT D ETANCHEITE	SEAL	DICHTUNG	GUARNICION
	2340.32353	1	GUARNIZIONE	JOINT D ETANCHEITE	SEAL	DICHTUNG	GUARNICION
	10106.01062.00 *	2	TAMPONE CILINDRO 1-4	BLOC CAOUTCHOUC	RUBBER PAD	PUFFER	TAMPON
	10106.01609.00	8	GUARNIZIONE	JOINT D ETANCHEITE	SEAL	DICHTUNG	GUARNICION
	10500.01613.01	1	RACCORDO	RACCORD DE TUYAU	PIPE UNION	ROHRVERBINDUNG	UNION DE TUBOS
	10500.06322.00	1	TRASMETT.BORLETTI	CONTACTEUR	SENDER UNIT	GEBER	TRANSMISOR
	10500.06322.01	1	TRASMETT.JAEGER	CONTACTEUR	SENDER UNIT	GEBER	TRANSMISOR
	10502.01676.01	1	RUBINETTO	ROBINET	COCK	HAHN	GRIFO
	10502.01679.00	1	TAPPO	BOUCHON FILETE	THREAD PLUG	GEWINDESTOPFEN	TAPON ROSCADO
	10512.01064.00	1	TERMOSTATO B.O.A.	THERMOSTAT	THERMOSTAT	THERMOSTAT	TERMOSTATO
	10512.01064.01	1	TERMOSTATO SAVARA	THERMOSTAT	THERMOSTAT	THERMOSTAT	TERMOSTATO
	10541.01601.00	1	GUARNIZIONE	JOINT	GASKET	DICHTUNG	JUNTA
	10548.01060.02	1	COLLETTORE ALIMENT.	COLLECTEUR ALIMENTAT	INTAKE MANIFOLD	ANSAUGKRUEMMER	COLECTOR ALIMENTACIO
	10548.01617.00	1	RACCORDO	RACCORD DE TUYAU	PIPE UNION	ROHRVERBINDUNG	UNION DE TUBOS

COLLETTORE D'ALIMENTAZIONE
COLLECTEUR D'ALIMENTATION
INTAKE MANIFOLD
ANSAUGKRUMMER
COLECTOR DE ALIMENTACION

TAV. 02.80

1ª	EDIZIONE	1974	APRILE
1st	EDITION		AVRIL
1st	EDITION		APRIL
1.	AUSGABE		APRIL
1ª	EDICION		ABRIL

DATA ALLESTIMENTO AGGIORNAMENTO

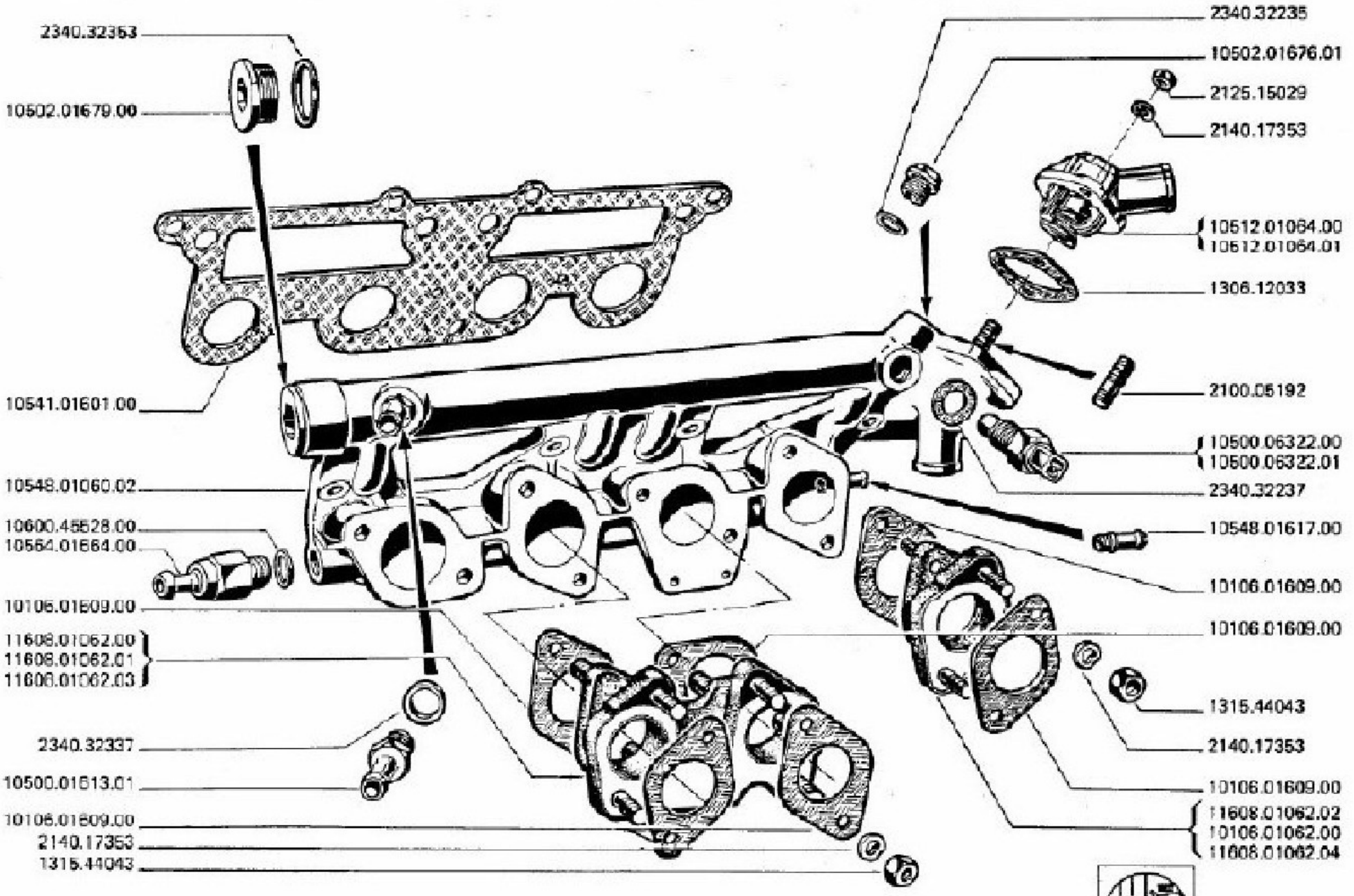

TAV. 02.80/0

COLLETTORE D ALIMENTAZIONE
COLLECTEUR D ALIMENTATION
INTAKE MANIFOLD
ANSAUGKRUMMER
COLECTOR DE ALIMENTACION

MODIFICA	N. ORDINAZIONE		QT.	DENOMINAZIONE	DESIGNATION	DESCRIPTION	BENENNUNG	DENOMINACIONCO
	10564.01664.00		1	VALVOLA NON RITORNO	CLAPET A BILLE	BALL VALVE	SICHERHEITSVENTIL	VALVULA ESFER.RETENC
	10600.45528.00		1	GUARNIZIONE	JOINT D ETANCHEITE	SEAL	DICHTUNG	GUARNICION
	11608.01062.00	*	1	TAMPONE CILINDRO 2-3	BLOC CAOUTCHOUC	RUBBER PAD	PUFFER	TAMPON
	11608.01062.01	*	1	TAMPONE CILINDRO 2-3	BLOC CAOUTCHOUC	RUBBER PAD	PUFFER	TAMPON
	11608.01062.02	*	2	TAMPONE CILINDRO 1-4	BLOC CAOUTCHOUC	RUBBER PAD	PUFFER	TAMPON
	11608.01062.03		1	TAMPONE CILINDRO 2	BLOC CAOUTCHOUC	RUBBER PAD	PUFFER	TAMPON
	11608.01062.04	*	2	TAMPONE CILINDRO 1-4	BLOC CAOUTCHOUC	RUBBER PAD	PUFFER	TAMPON

* ALTERNATIVA ALTERNATIVE ALTERNATIVE WAHLWEISE ALTERNATIVA

COLLETTORE E TUBI DI SCARICO
COLLECTEUR ET TUBES D'ECHAPPEMENT
EXHAUST MANIFOLD AND PIPES
AUSPUFFKRÜMMER UND AUSPUFFANLAGE
COLECTOR Y TUBOS DE ESCAPE

TAV. 02,82

1	I EDIZIONE	1974	APRILE	CATALOGO RICAMBI
ª	EDITION		AVRIL	
ª	EDITION		APRIL	
ª	AUSGABE		APRIL	
ª	EDICION		ABRIL	

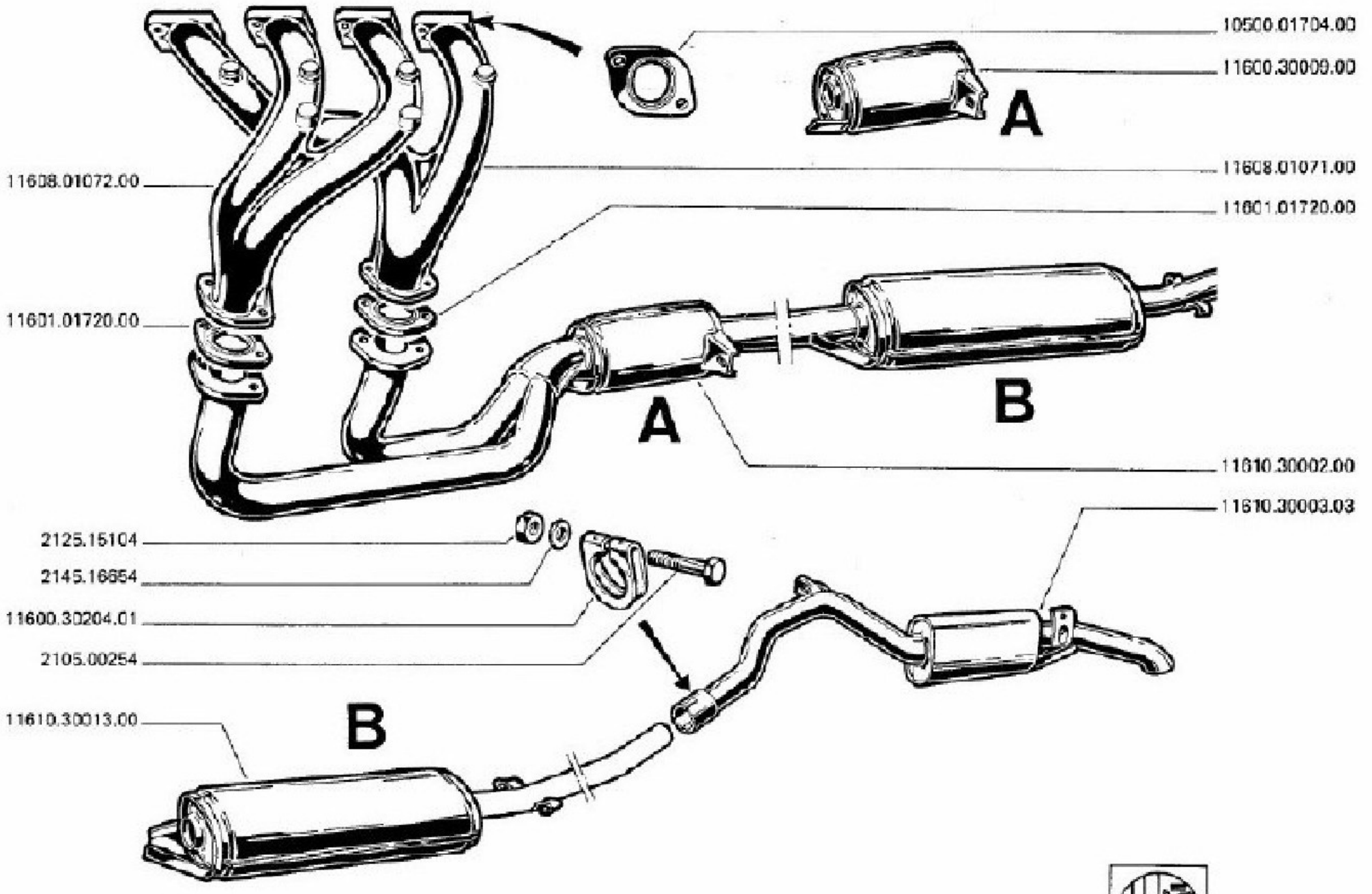

N. 0411

Alfetta GT

TAV. 02.8270

COLLETTORE E TUBI DI SCARICO
COLLECTEUR ET TUBES D ECHAPPEMENT
EXHAUST MANIFOLD AND PIPES
AUSPUFFKRUMMER UND AUSPUFFANLAGE
COLECTOR Y TUBOS DE ESCAPE

MODIFICA	N. ORDINAZIONE	QT.	DENOMINAZIONE	DESIGNATION	DESCRIPTION	BENENNUNG	DENOMINACIONES
	2105.00254	1	VITE	VIS	SCREW	SCHRAUBE	TORNILLO
	2125.15104	1	DADO	ECROU	NUT	MUTTER	TUERCA
	2145.16654	1	RONDELLA	RONDELLE	WASHER	SCHEIBE	ARANDELLA
	10500.01704.00	4	GUARNIZIONE	JOINT D ETANCHEITE	SEAL	DICHTUNG	GUARNICION
	11600.30009.00	1	POLMONCINO	SILENCIEUX	SILENCER	DEHNBALG	PULMONCITO
	11600.30204.01	1	FASCETTA	COLLIER DE DURITE	HOSE CLIP	SCHLAUCHBINDER	ABRAZADERA SUJEC.TUB
	11601.01720.00	2	GUARNIZIONE	JOINT D ETANCHEITE	SEAL	DICHTUNG	GUARNICION
	11608.01071.00	1	COLLETTORE CIL.1-4	COLLECTEUR ECHAPPEME	EXHAUST MANIFOLD	AUSPUFFKRUEMMER	COLECTOR DE ESCAPE
	11608.01072.00	1	COLLETTORE CIL. 2-3	COLLECTEUR ECHAPPEME	EXHAUST MANIFOLD	AUSPUFFKRUEMMER	COLECTOR DE ESCAPE
	11610.30002.00	1	TUBO SCAR.ANT.	TUYAU D ECHAPPEMENT	EXHAUST PIPE	AUSPUFFROHR	TUBO DE ESCAPE
	11610.30003.03	1	SILENZIATORE POST.	POT DE DETENTE	SILENCER	SCHALLDAEMPFER	SILENCIADOR
	11610.30013.00	1	SILENZIATORE	POT DE DETENTE	SILENCER	SCHALLDAEMPFER	SILENCIADOR

PARTICOLARI FISSAGGIO TUBI SCARICO
FIXATION DES TUBES D'ÉCHAPPEMENT
EXHAUST PIPE ATTACHING PARTS
AUSPUFFANLAGE-BEFESTIGUNG
PIEZAS FIJACION TUBO ESCAPE

TAV. 02.85

1a	EDIZIONE	APRILE	1974	DATA ULTIMO AGGIORNAMENTO
1re	EDITION	AVRIL		
1st	EDITION	APRIL		
1.	AUSGABE	APRIL		
1ra	EDICION	ABRIL		

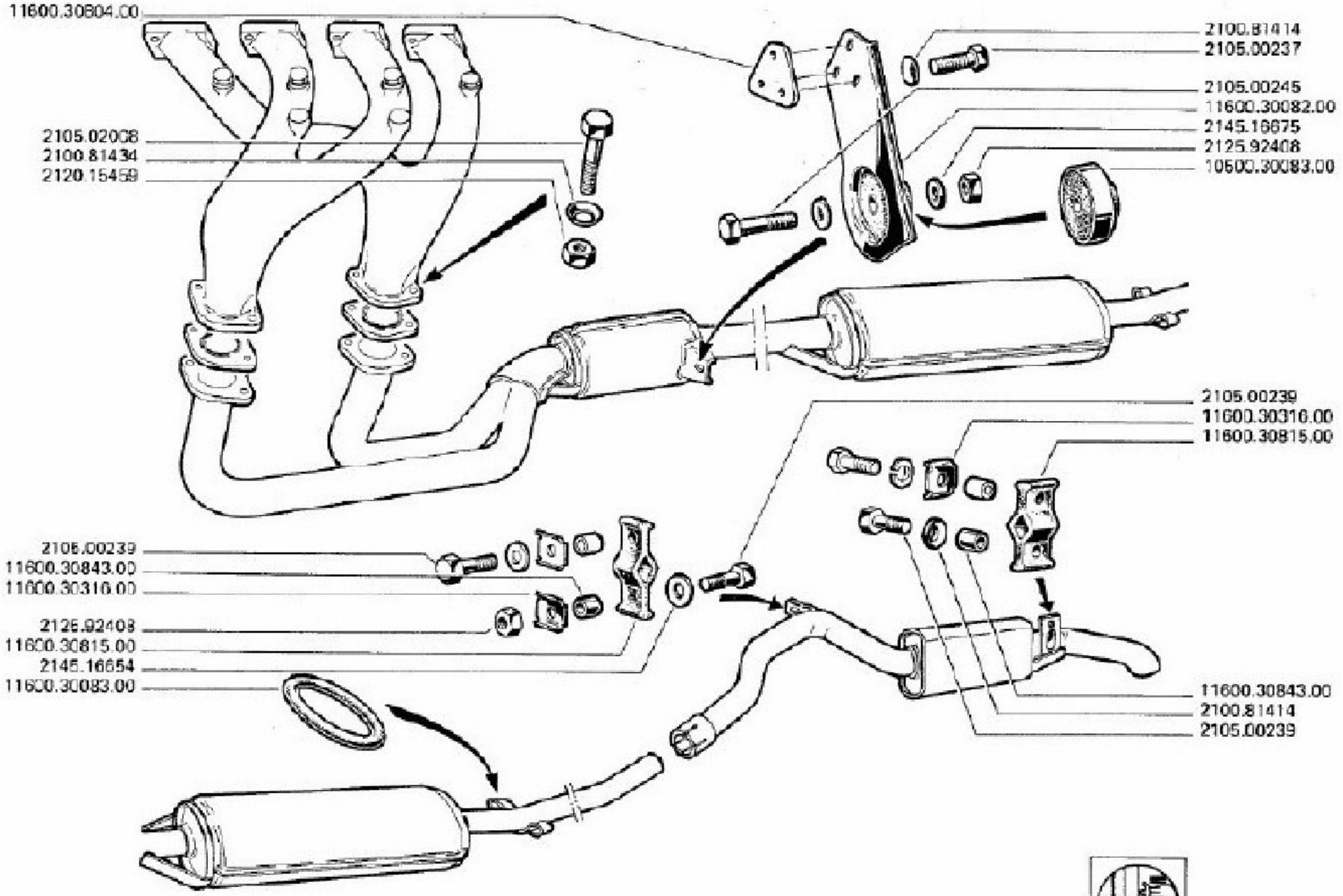

TAV. 02.850

PARTICOLARI FISSAGGIO TUBI SCARICO
FIXATION DES TUBES D ECHAPPEMENT
EXHAUST PIPE ATTACHING PARTS
AUSPUFFANLAGE-BEFESTIGUNG
PIEZAS FIJACION TUBO ESCAPE

MODIFICA	N. ORDINAZIONE	QT.	DENOMINAZIONE	DESIGNATION	DESCRIPTION	BENENNUNG	DENOMINACIONES
	2100.81414	6	RONDELLA	RONDELLE	WASHER	SCHEIBE	ARANDELLA
	2100.81434	4	RONDELLA	RONDELLE	WASHER	SCHEIBE	ARANDELLA
	2105.00237	3	VITE	VIS	SCREW	SCHRAUBE	TORNILLO
	2105.00239	4	VITE	VIS	SCREW	SCHRAUBE	TORNILLO
	2105.00245	1	VITE	VIS	SCREW	SCHRAUBE	TORNILLO
	2105.02008	4	VITE	VIS	SCREW	SCHRAUBE	TORNILLO
	2120.15459	4	DADO	ECROU	NUT	MUTTER	TUERCA
	2125.92408	2	DADO	ECROU	NUT	MUTTER	TUERCA
	2145.16654	1	RONDELLA	RONDELLE	WASHER	SCHEIBE	ARANDELLA
	2145.16675	2	RONDELLA	RONDELLE	WASHER	SCHEIBE	ARANDELLA
	10500.30083.00	1	SILENTBLOC	SILENTBLOC	SILENTBLOCK	SILENTBLOCK	SILENTBLOC
	11600.30082.00	1	STAFFA	ETRIER DE RESSORT	SPRING CLIP	FEDERKLAMMER	BRIDA DE BALLESTRA
	11600.30083.00	2	ANELLO	BAGUE	RING	RING	ANILLO
	11600.30316.00	4	PIASTRINA	PLAQUETTE	PLATE	PLAETTCHEN	PLAQUITA
	11600.30604.00	1	PIASTRINA	PLAQUETTE	PLATE	PLAETTCHEN	PLAQUITA
	11600.30815.00	2	SUPPORTO	SUPPORT	SUPPORT	LAGERUNG	SOPORTE
	11600.30843.00	4	BUSSOLA	BAGUE	BUSHING	HUELSE	BUJE

POMPA OLIO
POMPE A HUILE
OIL PUMP
ÖLPUMPE
BOMBA ACEITE

TAV. 03.10

1ª	EDIZIONE	APRILE	1974
1ère	EDITION	AVRIL	
1st	EDITION	APRIL	
1ª	AUSGABE	APRIL	
1ª	EDICION	ABRIL	

DATA DELL'ANNO ACCERTAMENTO

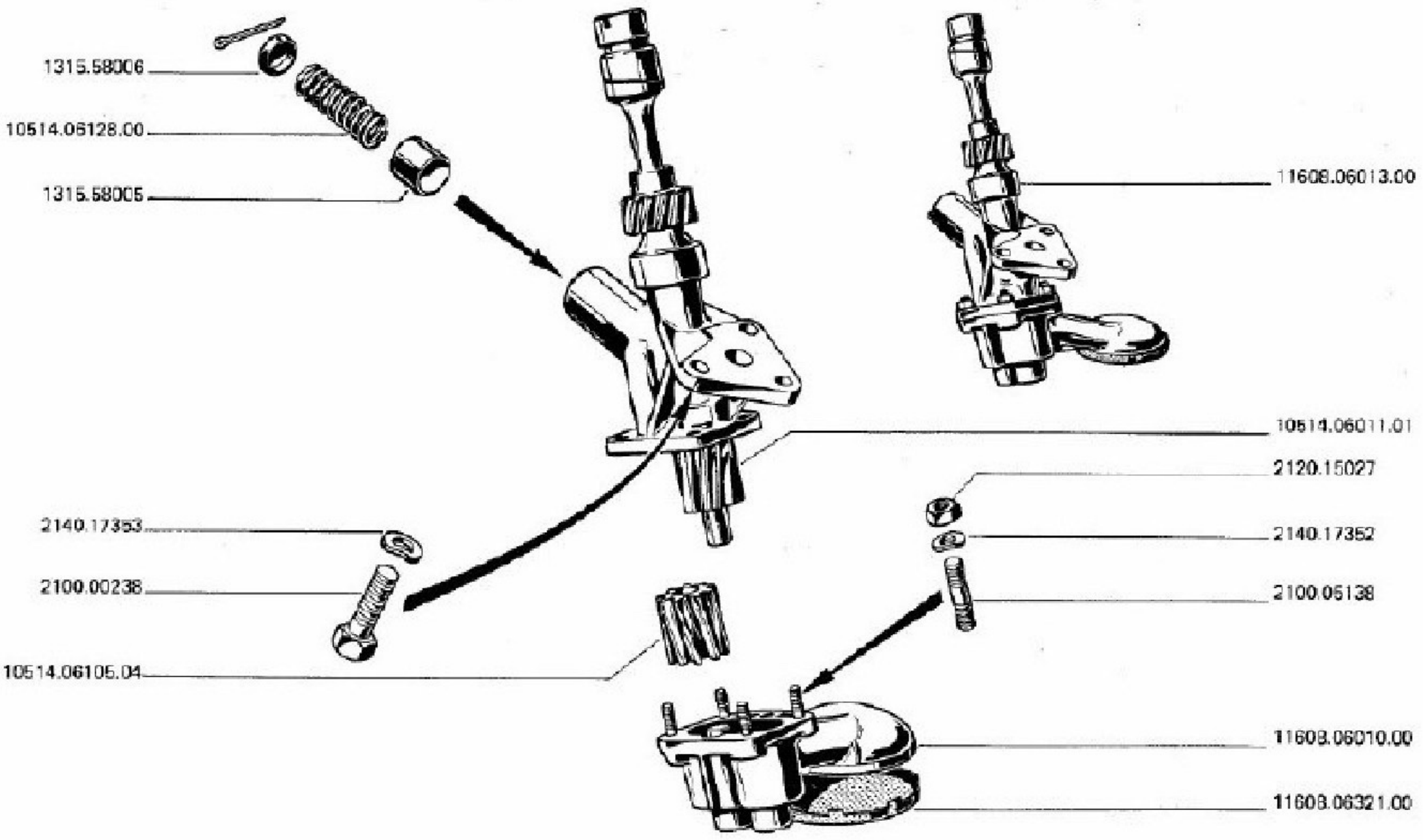

TAV. 03.10/0

POMPA OLIO
POMPE A HUILE
OIL PUMP
ÖLPUMPE
BOMBA ACEITE

MODIFICA	N. ORDINAZIONE	QT.	DENOMINAZIONE	DESIGNATION	DESCRIPTION	BENENNUNG	DENOMINACIONES
	1315.58005	1	VALVOLA	SOUPAPE	VALVE	VENTIL	VALVULA
	1315.58006	1	SCODELLINO	CUVETTE DE RESSORT	SPRING SEAT	FEDERTELLER	ASIENTO DEL MUELLE
	2100.00238	3	VITE	VIS	SCREW	SCHRAUBE	TORNILLO
	2100.05138	4	PRIGIONIERO	GOUJON	STUD	STIFTSCHRAUBE	PRISIONERO
	2120.15027	4	DADO	ECROU	NUT	MUTTER	TUERCA
	2140.17352	4	RONDELLA	RONDELLE	WASHER	SCHEIBE	ARANDELLA
	2140.17353	3	RONDELLA	RONDELLE	WASHER	SCHEIBE	ARANDELLA
	10514.06011.01	1	SUPPORTO POMPA	SUPPORT	SUPPORT	LAGERUNG	SOPORTE
	10514.06105.04	1	INGRANAGGIO CONDOTTO	PIGNON SECONDAIRE	SECONDARY GEAR	STEUERRAD	PINON SECUNDARIO
	10514.06128.00	1	MOLLA	RESSORT HELIC.CYLIND	HELICAL SPRING	SCHRAUBENFEDER	MUELLE HELICOIDAL
	11608.06010.00	1	CORPO POMPA	CORPS DE POMPE	PUMP BODY	PUMPENGEHAEUSE	DE LA BOMBA
	11608.06013.00	1	POMPA COMPL.	POMPE HUILE	OIL PUMP	OELPUMPE	BOMBA DE ACEITE
	11608.06321.00	1	RETE	CREPINE	STRAINER	NETZ	FILTRO

FILTRO OLIO
FILTRE A HUILE
OIL FILTER
ÖLFILTER
FILTRO ACEITE

TAV. 03.27

1°	EDIZIONE	1974	APRILE
1ère	EDITION		AVRIL
1st	EDITION		APRIL
1.	AUSGABE		APRIL
1ª	EDICION		ABRIL

DATA ULTIMO AGG. EFFETTUATO

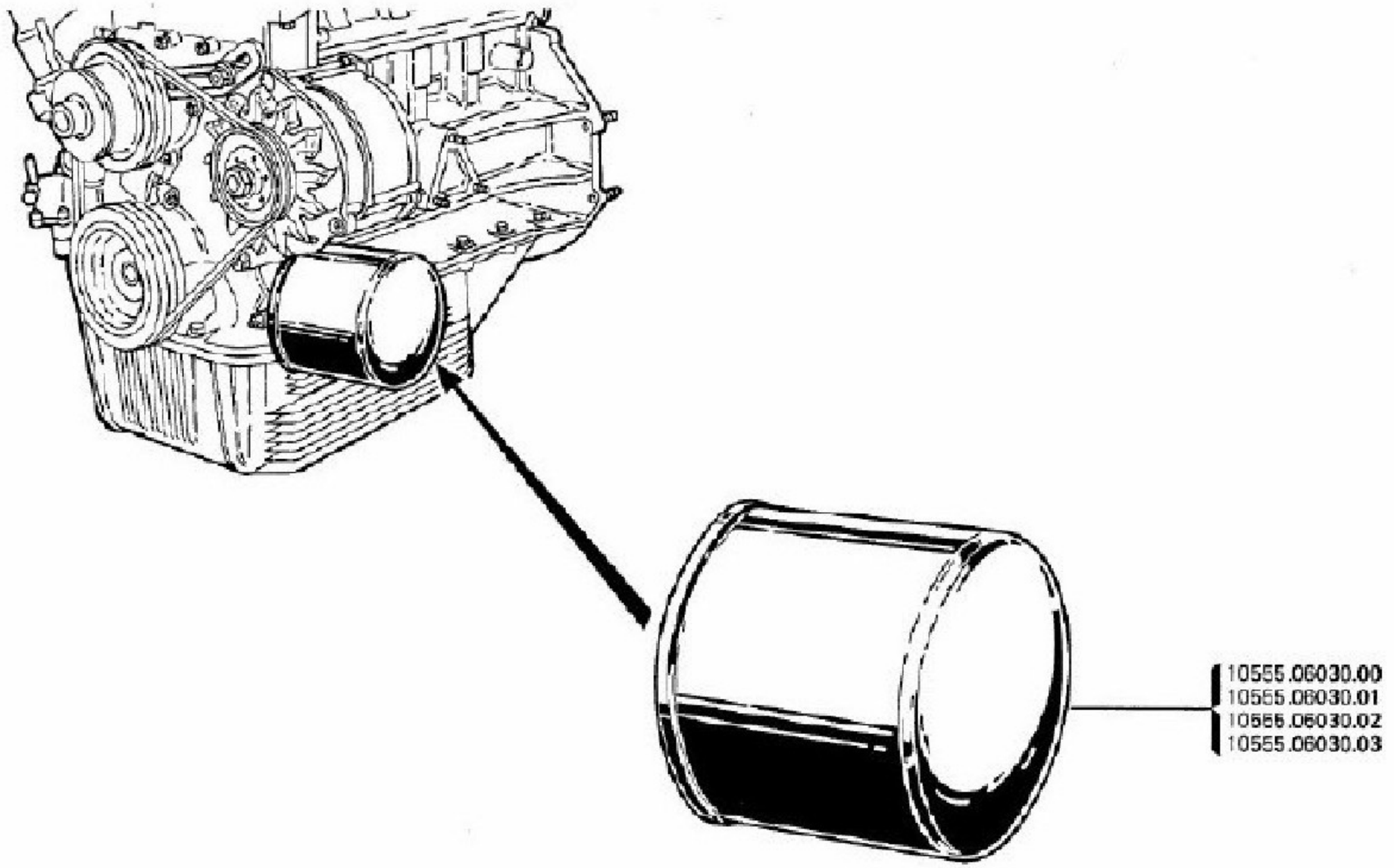

10555.06030.00
10555.06030.01
10555.06030.02
10555.06030.03

TAV. 03.27/0

FILTRO OLIO
FILTRE A HUILE
OIL FILTER
OLFILTER
FILTRO ACEITE

MODIFICA	N. ORDINAZIONE	QT.	DENOMINAZIONE	DESIGNATION	DESCRIPTION	BENENNUNG	DENOMINACIONES
	10555.06030.00	1	FILTRO OLIO CARELLO	FILTRE A HUILE	OIL FILTER	OELFILTER	FILTRO ACEITE
	10555.06030.01	1	FILTRO OLIO TECNOCAR	FILTRE A HUILE	OIL FILTER	OELFILTER	FILTRO ACEITE
	10555.06030.02	1	FILTRO OLIO FIAMM	FILTRE A HUILE	OIL FILTER	OELFILTER	FILTRO ACEITE
	10555.06030.03	1	FILTRO OLIO FISPA	FILTRE A HUILE	OIL FILTER	OELFILTER	FILTRO ACEITE

POMPA ACQUA E SUO COMANDO
POMPE A EAU
WATER PUMP AND DRIVE
KÜHLWASSERPUMPE
BOMBA AGUA

TAV. 04.00

1a	EDIZIONE	1974	APRILE	DATA ESTRAZIONE ACCESSORIAMENTO
1st	EDITION		AVRIL	
1st	EDITION		APRIL	
1.	AUSGABE		APRIL	
1ª	EDICION		ABRIL	

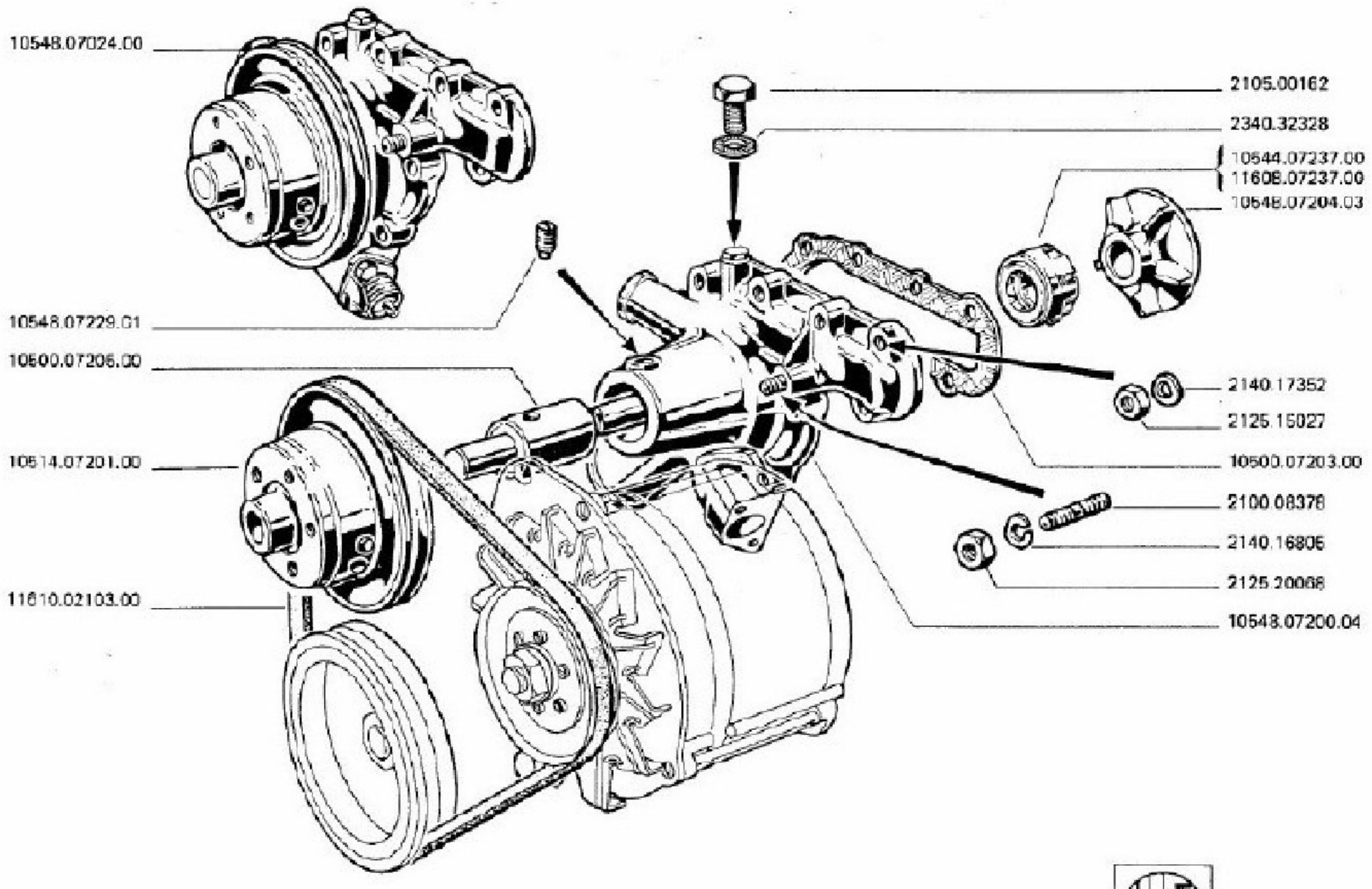

TAV. 04.0070

POMPA ACQUA E SUO COMANDO
POMPE A EAU
WATER PUMP AND DRIVE
KUHLWASSERPUMPE
BOMBA AGUA

MODIFICA	N. ORDINAZIONE	QT.	DENOMINAZIONE	DÉSIGNATION	DESCRIPTION	BENENNUNG	DENOMINACIONES
	2100.08378	1	PRIGIONIERO	GOUJON	STUD	STIFTSCHRAUBE	PRISIONERO
	2105.00162	1	TAPPO	VIS	SCREW	SCHRAUBE	TORNILLO
	2125.15027	9	DADO	ECROU	NUT	MUTTER	TUERCA
	2125.20068	1	DADO	ECROU	NUT	MUTTER	TUERCA
	2140.16805	1	RONDELLA	RONDELLE	WASHER	SCHEIBE	ARANDELLA
	2140.17352	9	RONDELLA	RONDELLE	WASHER	SCHEIBE	ARANDELLA
	2340.32328	1	GUARNIZIONE	JOINT D ETANCHEITE	SEAL	DICHTUNG	GUARNICION
	10500.07203.00	1	GUARNIZIONE	GARNITURE POMPE EAU	WATER PUMP PACKING	WASSERPUMPENPACKUNG	ROTOR BOMBA AGUA
	10500.07205.00	1	ALBERINO	AXE	SPINDLE	WELLE	EJE
	10514.07201.00	1	PULEGGIA	POULIE POUR COURROIE	BELT PULLEY	GURTSCHEIBE	POLEA DE CORREA
	10544.07237.00	* 1	TENUTA	JOINT D ETANCHEITE	PACKING	DICHTMASSE	HERMETICIDAD
	10548.07024.00	1	POMPA ACQUA COMPL.	POMPE A EAU	WATER PUMP	WASSERPUMPE	BOMBA DE AGUA
	10548.07200.04	1	CORPO POMPA	CORPS DE POMPE	PUMP BODY	PUMPENGEHAEUSE	DE LA BOMBA
	10548.07204.03	1	GIRANTE	TURBINE DE POMPE	PUMP IMPELLER	PUMPENFLUEGELRAD	ROTOR DE BOMBA
	10548.07229.01	1	GRANO	PIED DE CENTRAGE	DOWEL	PASSTIFT	PASADOR DE ENSAMBLE
	11608.07237.00	* 1	TENUTA	JOINT D ETANCHEITE	PACKING	DICHTMASSE	HERMETICIDAD
	11610.02103.00	1	CINGHIA	COURROIE	BELT	KEILRIEMEN	CORREA

* ALTERNATIVA ALTERNATIVE ALTERNATIVE WAHLWEISE ALTERNATIVA

GRUPPO REVISIONE POMPA ACQUA
COLLECTION-REPARATION DE POMPE A EAU
WATER PUMP OVERHALL KIT
REPARATURSATZ FÜR KÜHLWASSERPUMPE
GRUPOS REVISION BOMBA AGUA

TAV. 04.02

1ª	EDIZIONE	1974	APRILE	DATA ULTIMO AGGIORNAMENTO
1ère	EDITION		AVRIL	
1st	EDITION		APRIL	
1.	AUSGABE		APRIL	
1ª	EDICIÓN		ABRIL	

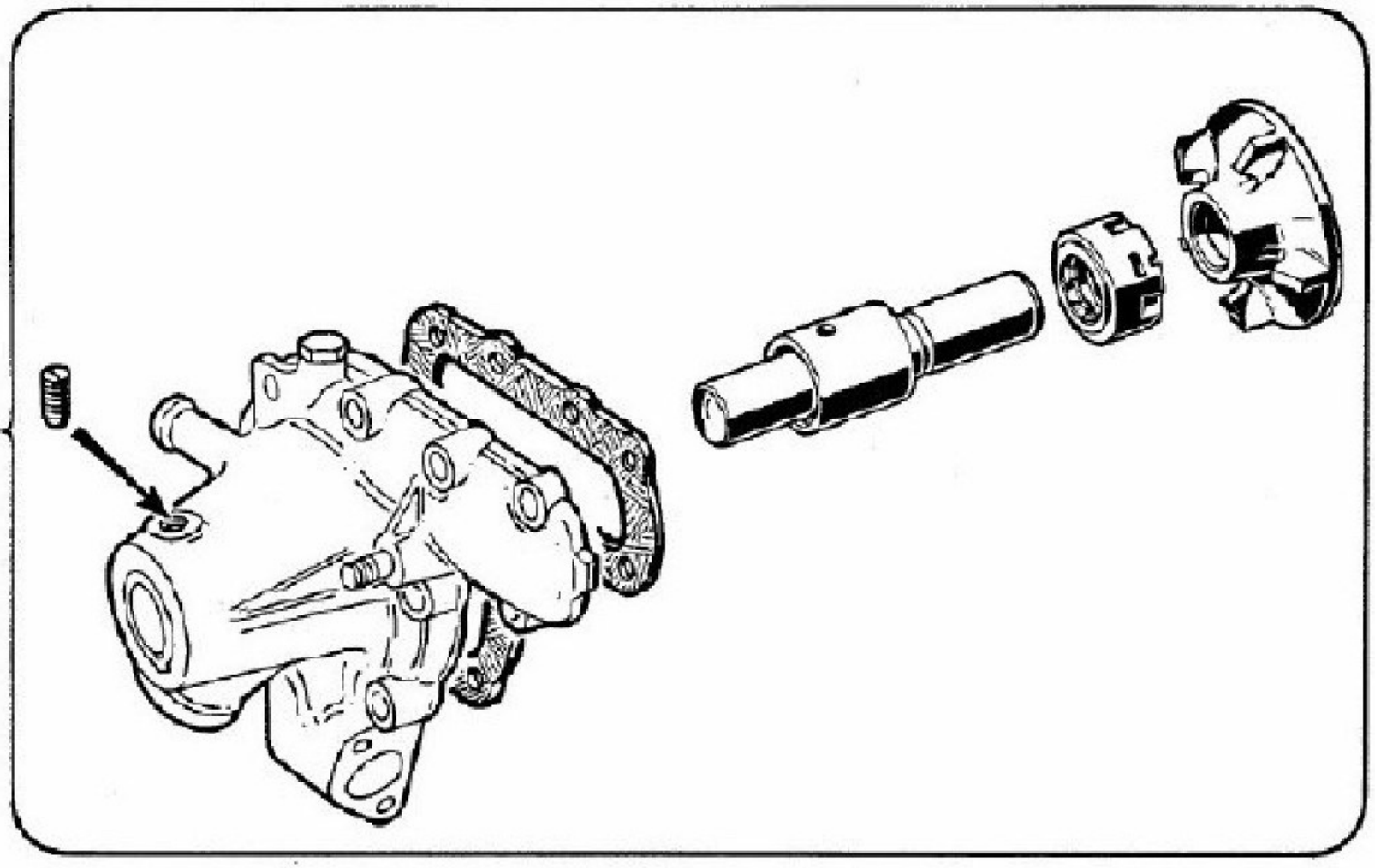

TAV. 04.02/0

GRUPPO REVISIONE POMPA ACQUA
COLLECTION-REPARATION DE POMPE A EAU
WATER PUMP OVERHALL KIT
REPARATURSATZ FUER KUEHLWASSERPUMPE
GRUPOS REVISION BOMBA AGUA

MODIFICA	N. ORDINAZIONE	QT.	DENOMINAZIONE	DESIGNATION	DESCRIPTION	BENENNUNG	DENOMINACIONES
	10526.07336.00	1	GR.REVISIONE	COLLECTION-REPARATIO	OVERHAUL KIT	GRUPPE REPARATUR	GRUPO REVISION

RADIATORE ACQUA
RADIATEUR EAU
RADIATOR
WASSERKÜHLER
RADIADOR AGUA

TAV. 04.10

1	EDIZIONE	1974	APRILE
	EDITION		AVRIL
	EDITION		APRIL
	AUSGABE		APRIL
	EDICION		ABRIL

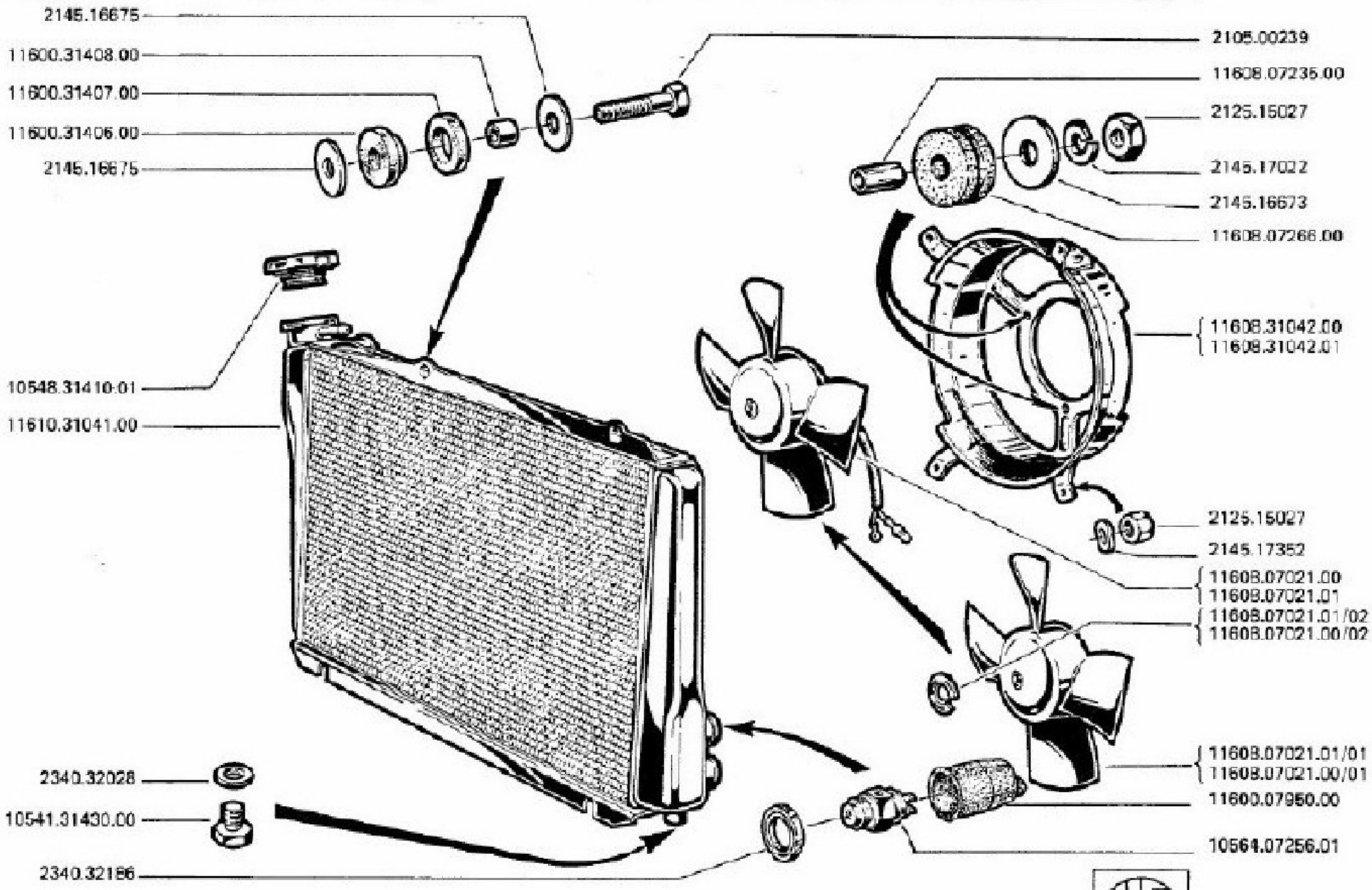

TAV. 04.10/0

RADIATORE ACQUA
RADIATEUR EAU
RADIATOR
WASSERKUEHLER
RADIATOR AGUA

MODIFICA	N. ORDINAZIONE	QT.	DENOMINAZIONE	DÉSIGNATION	DESCRIPTION	BENENNUNG	DENOMINACIONES
	2105.00239	4	VITE	VIS	SCREW	SCHRAUBE	TORNILLO
	2125.15027	7	DADO	ECROU	NUT	MUTTER	TUERCA
	2145.16673	3	RONDELLA	RONDELLE	WASHER	SCHEIBE	ARANDELLA
	2145.16675	8	RONDELLA	RONDELLE	WASHER	SCHEIBE	ARANDELLA
	2145.17022	3	RONDELLA	RONDELLE	WASHER	SCHEIBE	ARANDELLA
	2145.17352	4	RONDELLA	RONDELLE	WASHER	SCHEIBE	ARANDELLA
	2340.32028	1	GUARNIZIONE	JOINT D ETANCHEITE	SEAL	DICHTUNG	GUARNICION
	2340.32186	1	GUARNIZIONE	JOINT D ETANCHEITE	SEAL	DICHTUNG	GUARNICION
	10541.31430.00	1	TAPPO SCARICO	BOUCHON DE VIDANGE	DRAIN PLUG	ABLASSTOPFEN	TAPON DE VACIADO
	10548.31410.01	1	TAPPO	BOUCHON	PLUG	VERSCHLUSSCHRAUBE	TAPON
	10564.07256.01	1	TERMISTORE	THERMISTANCE TEM.EAU	TEMPERATURE	FERNTHERMOMETER	TERMOMETRO AGUA
	11600.07950.00	1	CAPPUCCIO	CAPUCHON PROTECTEUR	PROTECTIVE CAP	SCHUTZKAPPE	CASQUILLO PROTECTOR
	11600.31406.00	4	TAMPONE	BLOC CAOUTCHOUC	RUBBER PAD	PUFFER	TAMPON
	11600.31407.00	4	RONDELLA	RONDELLE	WASHER	SCHEIBE	ARANDELLA
	11600.31408.00	4	DISTANZIALE	ENTRETOISE	SPACER	ABSTANDSTUECK	SEPARADOR
	11608.07021.00	1	ELETTROVENT. IB-MEC	VENTILATEUR	ELECTRIC FAN	LUEFTER	VENTILADOR
	11608.07021.00/01	1	VENTOLA IB-MEC	VENTILATEUR	FAN	LUEFTER	ROTOR VENTILADOR
	11608.07021.00/02	1	MOLLETTA IB-MEC	AGRAFE	CLIP	KLEMMSTUECK	MUELLECITO
	11608.07021.01	1	ELETTROVENT. BOSCH	VENTILATEUR	ELECTRIC FAN	LUEFTER	VENTILADOR
	11608.07021.01/01	1	VENTOLA BOSCH	VENTILATEUR	FAN	LUEFTER	ROTOR VENTILADOR
	11608.07021.01/02	1	MOLLETTA BOSCH	AGRAFE	CLIP	KLEMMSTUECK	MUELLECITO

RADIATORE ACQUA
RADIATEUR EAU
RADIATOR
WASSERKÜHLER
RADIADOR AGUA

TAV. 04.10

1ª EDIZIONE 1974 APRILE
1ère EDITION AVRIL
1st EDITION APRIL
1. AUSGABE APRIL
1ª EDICION ABRIL

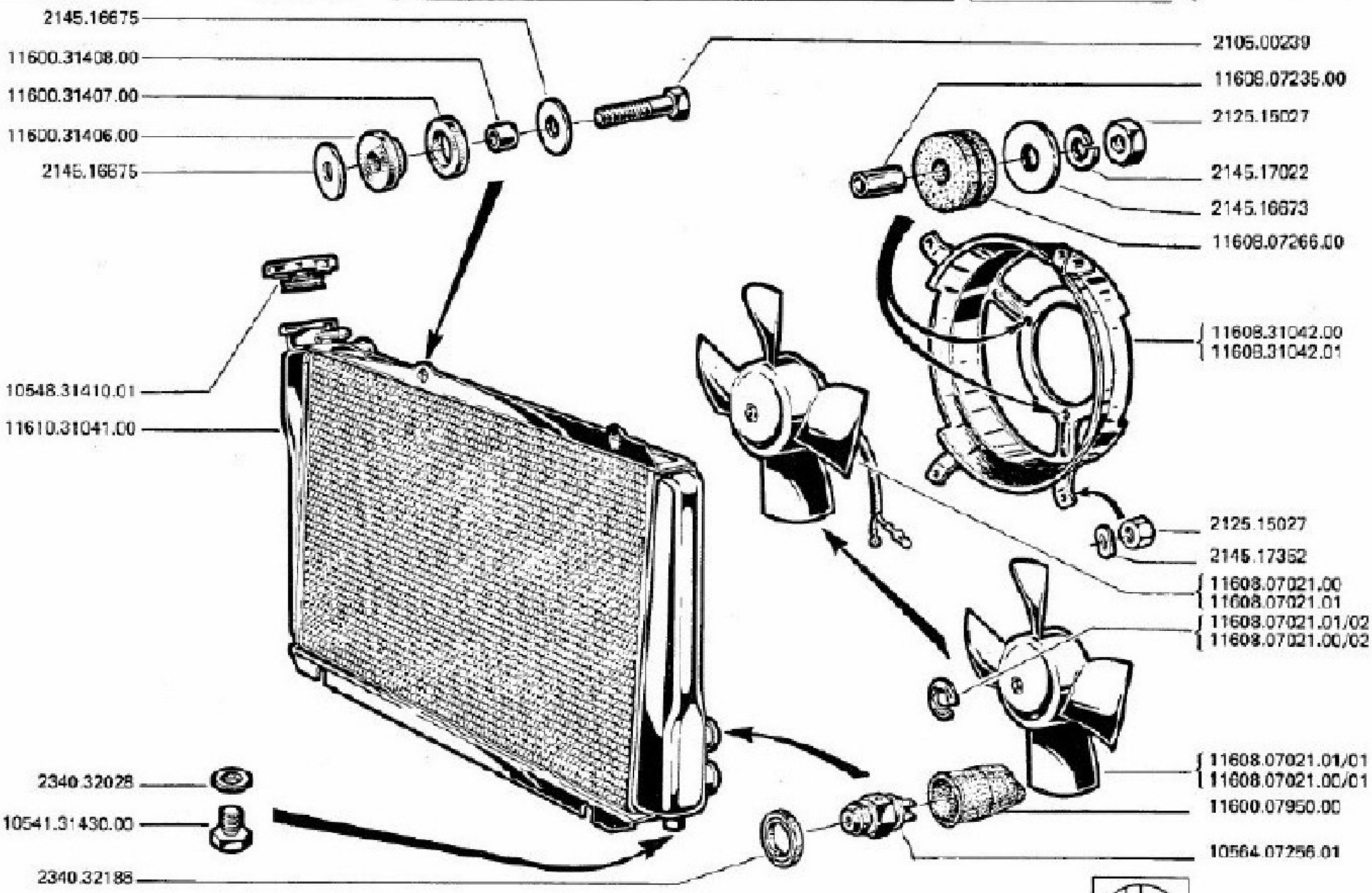

TAV. 04.1070

RADIATORE ACQUA
RADIATEUR EAU
RADIATOR
WASSERKUEHLER
RADIATOR AGUA

MODIFICA	N. ORDINAZIONE	QT.	DENOMINAZIONE	DESIGNATION	DESCRIPTION	BENENNUNG	DENOMINACIONES
	11608.07235.00	3	DISTANZIALE	ENTRETOISE	SPACER	ABSTANDSTUECK	SEPARADOR
	11608.07266.00	3	GOMMINO	CAOUTCHOUC	GROMMET	GUMMITEIL	GOMITA
	11608.31042.00	1	CONVOGLIATORE IB-MEC	COUVERCLE AERATION	VENTILATOR COVER	DECKEL	TAPA
	11608.31042.01	1	CONVOGLIATORE BOSCH	COUVERCLE AERATION	VENTILATOR COVER	DECKEL	TAPA
	11610.31041.00	1	RADIATORE COMPL.	RADIATEUR	RADIATOR	KUEHLER	RADIADOR

TUBAZIONI ACQUA DEL RADIATORE
TUYAUTERIE EAU RADIATEUR
WATER HOSES
KÜHLWASSERLEITUNGEN
TUBOS AGUA DEL RADIATOR

TAV. 04.11

1ª	EDIZIONE	1974	APRILE
1st	EDITION		AVRIL
1ª	EDITION		APRIL
1.	AUSGABE		APRIL
1ª	EDICION		ABRIL

DATA DELLE MODIFICHE

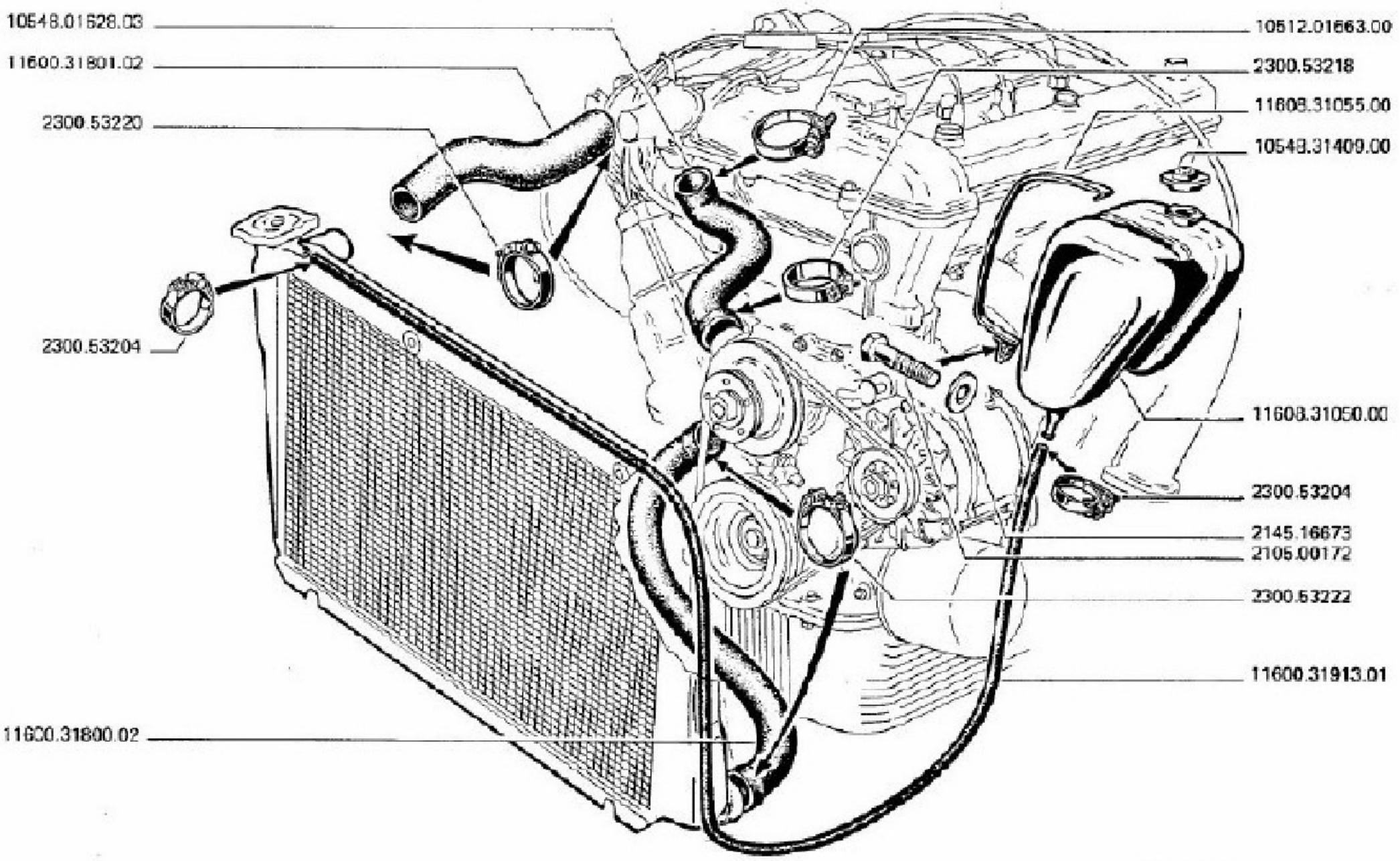

TAV. 04.11/0

TUBAZIONI ACQUA DEL RADIATORE
TUYAUTERIE EAU RADIATEUR
WATER HOSES
KUEHLWASSERLEITUNGEN
TUBOS AGUA DEL RADIATOR

MODIFICA	N. ORDINAZIONE	QT.	DENOMINAZIONE	DESIGNATION	DESCRIPTION	BENENNUNG	DENOMINACIONES
	2105.00172	1	VITE	VIS	SCREW	SCHRAUBE	TORNILLO
	2145.16673	1	RONDELLA	RONDELLE	WASHER	SCHEIBE	ARANDELLA
	2300.53204	2	FASCETTA	COLLIER DE DURITE	HOSE CLIP	SCHLAUCHBINDER	ABRAZADERA SUJEC.TUB
	2300.53218	1	FASCETTA	COLLIER DE DURITE	HOSE CLIP	SCHLAUCHBINDER	ABRAZADERA SUJEC.TUB
	2300.53220	3	FASCETTA	COLLIER DE DURITE	HOSE CLIP	SCHLAUCHBINDER	ABRAZADERA SUJEC.TUB
	2300.53222	1	FASCETTA	COLLIER DE DURITE	HOSE CLIP	SCHLAUCHBINDER	ABRAZADERA SUJEC.TUB
	10512.01663.00	1	FASCETTA	COLLIER DE DURITE	HOSE CLIP	SCHLAUCHBINDER	ABRAZADERA SUJEC.TUB
	10548.01628.03	1	TUBO AL COLLETTORE	TUYAU D'EAU	WATER PIPE	WASSERROHR	TUBO DE AGUA
	10548.31409.00	1	TAPPO	BOUCHON	PLUG	VERSCHLUSSCHRAUBE	TAPON
	11600.31800.02	1	TUBO ALLA POMPA	TUYAU D'EAU	WATER PIPE	WASSERROHR	TUBO DE AGUA
	11600.31801.02	1	TUBO AL RADIATORE	TUYAU D'EAU	WATER PIPE	WASSERROHR	TUBO DE AGUA
	11600.31913.01	1	TUBETTO	TUBE	PIPE	ROEHRCHEN	TUBITO
	11608.31050.00	1	SERBATOIO	RESERVOIR D'EAU	WATER RESERVOIR	WASSERBEHAELTER	DEPOSITO DE AGUA
	11608.31055.00	1	FASCETTA	PATTE DE FIXATION	CLAMP	SCHELLE	ABRAZADERA

GRUPPO GUARNIZIONI MOTORE
COLLECTION DE JOINTS MOTEUR
ENGINE SEAL KIT
MOTORDICHTUNGEN
GRUPO GUARNICIONES MOTOR

TAV. 09.00

1ª EDIZIONE 1ère EDITION 1st EDITION AUSGABE 1ª EDICION — APRILE AVRIL APRIL APRIL ABRIL — 1974

DATA ULTIMO AGGIORNAMENTO

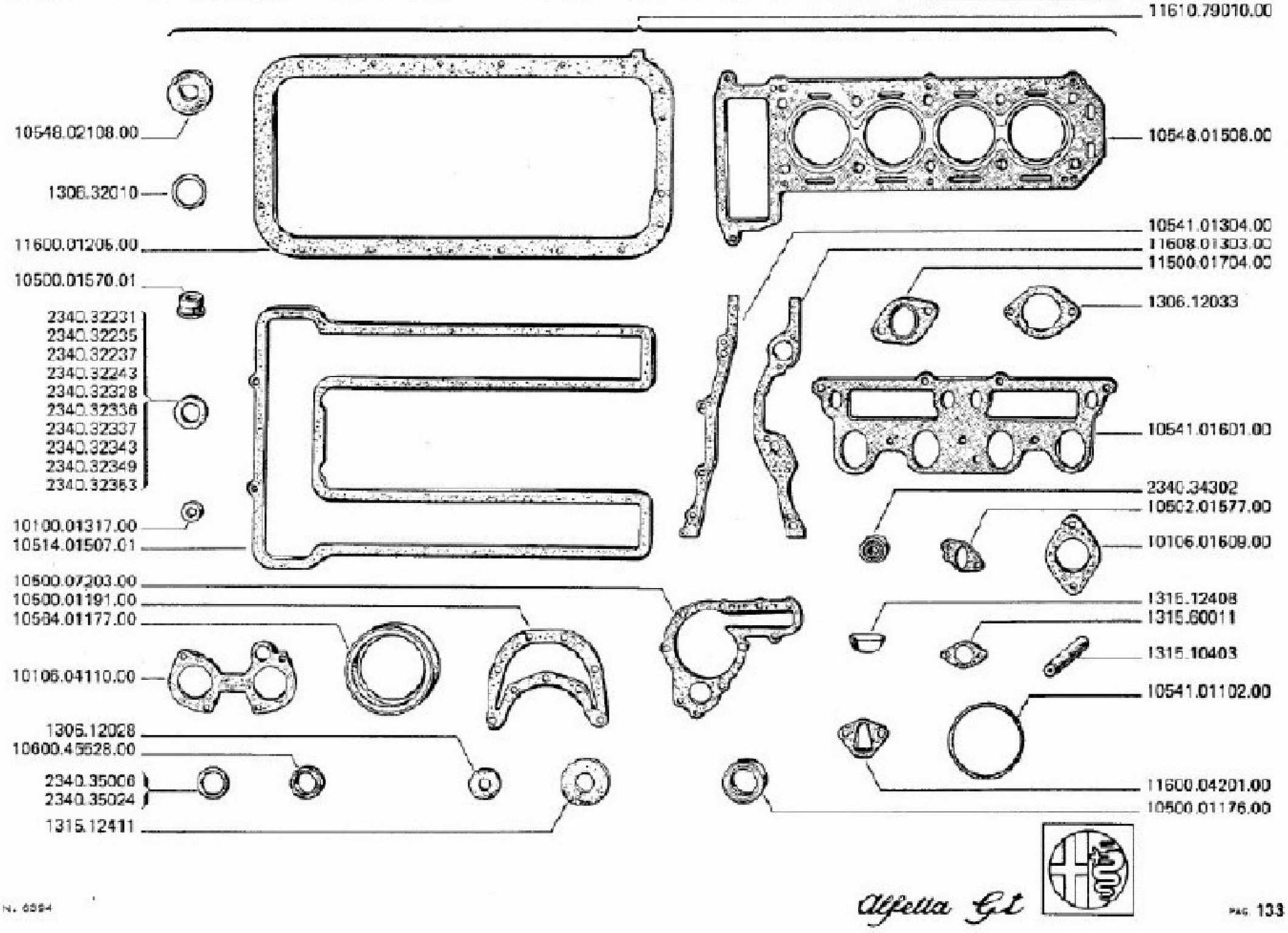

TAV. 09.00/0

GRUPPO GUARNIZIONI MOTORE
COLLECTION DE JOINTS MOTEUR
ENGINE SEAL KIT
MOTORDICHTUNGEN
GRUPO GUARNICIONES MOTOR

MODIFICA	N. ORDINAZIONE	QT.	DENOMINAZIONE	DESIGNATION	DESCRIPTION	BENENNUNG	DENOMINACIONES
	1306.12028	4	GUARNIZ. POMELLI	JOINT D ETANCHEITE	SEAL	DICHTUNG	GUARNICION
	1306.12033	1	GUARNIZ. TERMOSTATO	JOINT D ETANCHEITE	SEAL	DICHTUNG	GUARNICION
	1306.32010	1	ANELLO PER DISTRIB	BAGUE	RING	RING	ANILLO
	1315.10403	2	CANNOTTO	JOINT D ETANCHEITE	SEAL	DICHTUNG	GUARNICION
	1315.12408	2	GUARNIZ. COPERCHI	JOINT D ETANCHEITE	SEAL	DICHTUNG	GUARNICION
	1315.12411	1	GUARNIZ. TAPPO	JOINT D ETANCHEITE	SEAL	DICHTUNG	GUARNICION
	1315.60011	1	GUARNIZ. SUPPORTO	JOINT D ETANCHEITE	SEAL	DICHTUNG	GUARNICION
	2340.32231	1	GUARNIZ. TRASMETT.	JOINT	GASKET	DICHTUNG	JUNTA
	2340.32235	1	GUARNIZ. TAPPO	JOINT D ETANCHEITE	SEAL	DICHTUNG	GUARNICION
	2340.32237	1	GUARNIZ. RACCORDO	JOINT D ETANCHEITE	SEAL	DICHTUNG	GUARNICION
	2340.32243	1	GUARNIZ. TAPPO	JOINT D ETANCHEITE	SEAL	DICHTUNG	GUARNICION
	2340.32328	1	GUARNIZ. TAPPO	JOINT D ETANCHEITE	SEAL	DICHTUNG	GUARNICION
	2340.32336	1	GUARNIZIONE	JOINT D ETANCHEITE	SEAL	DICHTUNG	GUARNICION
	2340.32337	1	GUARNIZ. RACCORDO	JOINT D ETANCHEITE	SEAL	DICHTUNG	GUARNICION
	2340.32343	5	GUARNIZ. TAPPO	JOINT D ETANCHEITE	SEAL	DICHTUNG	GUARNICION
	2340.32349	2	GUARNIZ. TAPPO	JOINT D ETANCHEITE	SEAL	DICHTUNG	GUARNICION
	2340.32353	1	GUARNIZ. TAPPO	JOINT D ETANCHEITE	SEAL	DICHTUNG	GUARNICION
	2340.34302	1	ANELLO TENUTA	JOINT	SEAL	DICHTRING	JUNTA
	2340.35006	6	ANELLO TENUTA	JOINT D ETANCHEITE	SEAL	DICHTUNG	GUARNICION
	2340.35024	1	ANELLO TENUTA	JOINT D ETANCHEITE	SEAL	DICHTUNG	GUARNICION
	10100.01317.00	1	ANELLO TENUTA	JOINT D ETANCHEITE	SEAL	DICHTUNG	GUARNICION

GRUPPO GUARNIZIONI MOTORE
COLLECTION DE JOINTS MOTEUR
ENGINE SEAL KIT
MOTORDICHTUNGEN
GRUPO GUARNICIONES MOTOR

TAV. 09.00

1a	EDIZIONE	1974	APRILE
ère	EDITION		AVRIL
st	EDITION		APRIL
-	AUSGABE		APRIL
era	EDICION		ABRIL

DATA ULTIMO AGGIORNAMENTO

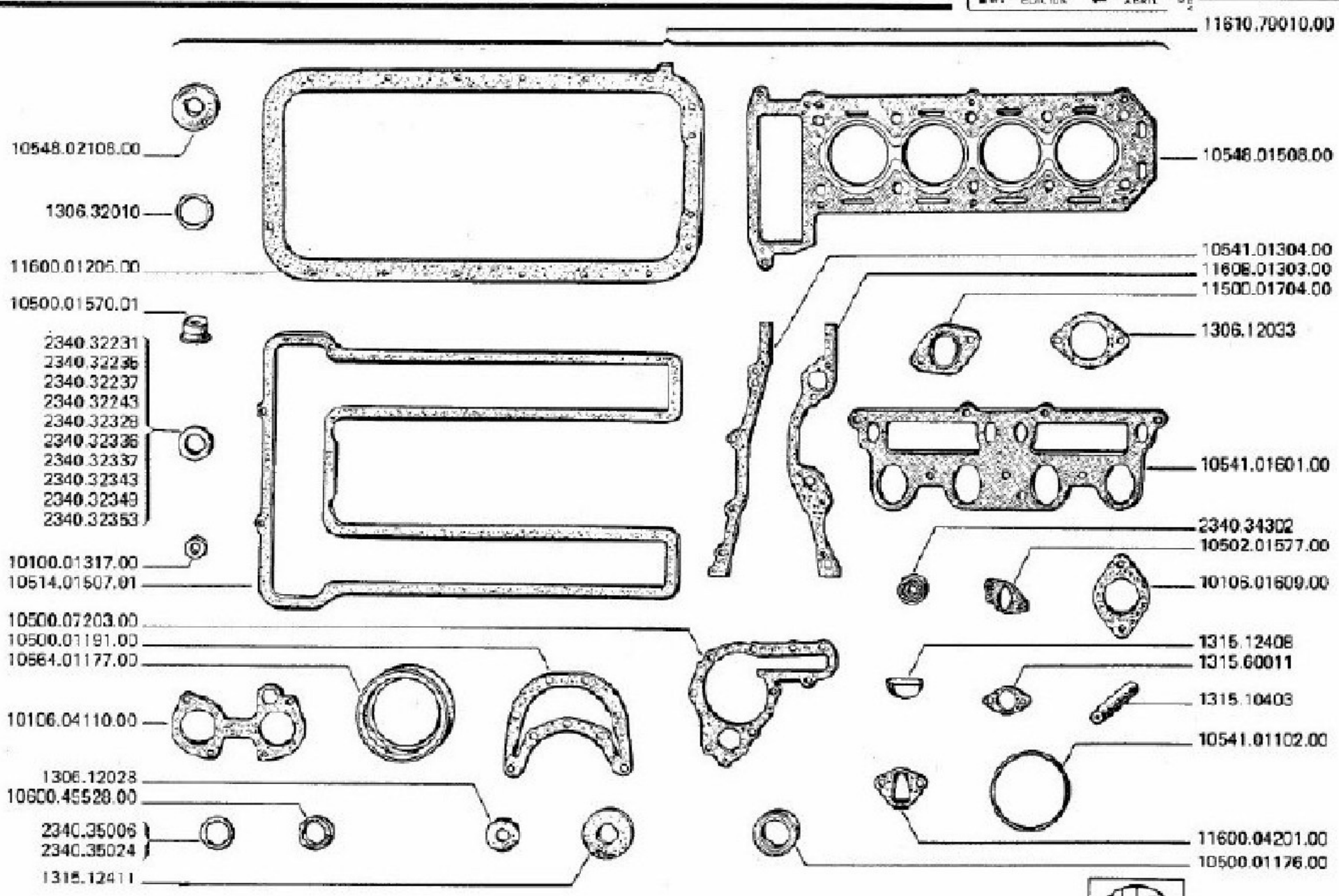

Alfetta GT

TAV. 09.00/0

GRUPPO GUARNIZIONI MOTORE
COLLECTION DE JOINTS MOTEUR
ENGINE SEAL KIT
MOTORDICHTUNGEN
GRUPO GUARNICIONES MOTOR

LOGISTICA	N. ORDINAZIONE	QT.	DENOMINAZIONE	DÉSIGNATION	DESIGNATION	BENENNUNG	DENOMINACIONES
	10106.01609.00	8	GUARNIZ. TAMPONI	JOINT D ETANCHEITE	SEAL	DICHTUNG	GUARNICION
	10106.04110.00	2	GUARNIZ. CARBURATORI	JOINT D ETANCHEITE	SEAL	DICHTUNG	GUARNICION
	10500.01176.00	1	ANELLO TENUTA	JOINT	SEAL	DICHTRING	JUNTA
	10500.01191.00	1	GUARNIZ. COPERCHIO	JOINT D ETANCHEITE	SEAL	DICHTUNG	GUARNICION
	10500.01570.01	4	CAPPUCCIO	CAPUCHON	BOOT	KAPPE	CAPUCHON
	10500.01704.00	4	GUARNIZ. COLLETTORE	JOINT D ETANCHEITE	SEAL	DICHTUNG	GUARNICION
	10500.07203.00	1	GUARNIZ. POMPA ACQUA	GARNITURE POMPE EAU	WATER PUMP PACKING	WASSERPUMPENPACKUNG	ROTOR BOMBA AGUA
	10502.01577.00	1	GUARNIZ. SUPPORTO	JOINT D ETANCHEITE	SEAL	DICHTUNG	GUARNICION
	10514.01507.01	1	GUARNIZ. COP. TESTA	JOINT DE CULASSE	CYLINDER HEAD GASKET	ZYLINDERKOPFDICHTUNG	JUNTA DE CULATA
	10541.01102.00	4	ANELLO TENUTA	JOINT	SEAL	DICHTRING	JUNTA
	10541.01304.00	1	GUARNIZ. BASAMENTO	JOINT	GASKET	DICHTUNG	JUNTA
	10541.01601.00	1	GUARNIZ. COLLETTORE	JOINT	GASKET	DICHTUNG	JUNTA
	10548.01508.00	1	GUARNIZ. TESTA	JOINT DE CULASSE	CYLINDER HEAD GASKET	ZYLINDERKOPFDICHTUNG	JUNTA DE CULATA
	10548.02108.00	1	PARAOLIO	PARE-HUILE	OIL SEAL	OELDICHTRING	GUARNIC.RETENC.ACEIT
	10564.01177.00	1	ANELLO TENUTA	JOINT	SEAL	DICHTRING	JUNTA
	10600.49528.00	1	GUARNIZ. RACCORDO	JOINT D ETANCHEITE	SEAL	DICHTUNG	GUARNICION
	11600.01203.00	1	GUARNIZ. COPPA OLIO	JOINT D ETANCHEITE	SEAL	DICHTUNG	GUARNICION
	11600.04201.00	2	GUARNIZ. POMPA	JOINT D ETANCHEITE	SEAL	DICHTUNG	GUARNICION
	11608.01303.00	1	GUARNIZ. BASAMENTO	JOINT D ETANCHEITE	SEAL	DICHTUNG	GUARNICION
	11610.79010.00	1	GR. GUARNIZIONI	COLLECTION DE JOINTS	SEAL KIT	GRUPPE DICHTUNGEN	GRUPO GUARNICIONES

1ª EDIZIONE 1ère EDITION 1st EDITION 1. AUSGABE 1ª EDICION APRILE 1974 APRIL APRIL APRIL ABRIL
DETTAGLI NON AGGIORNATI

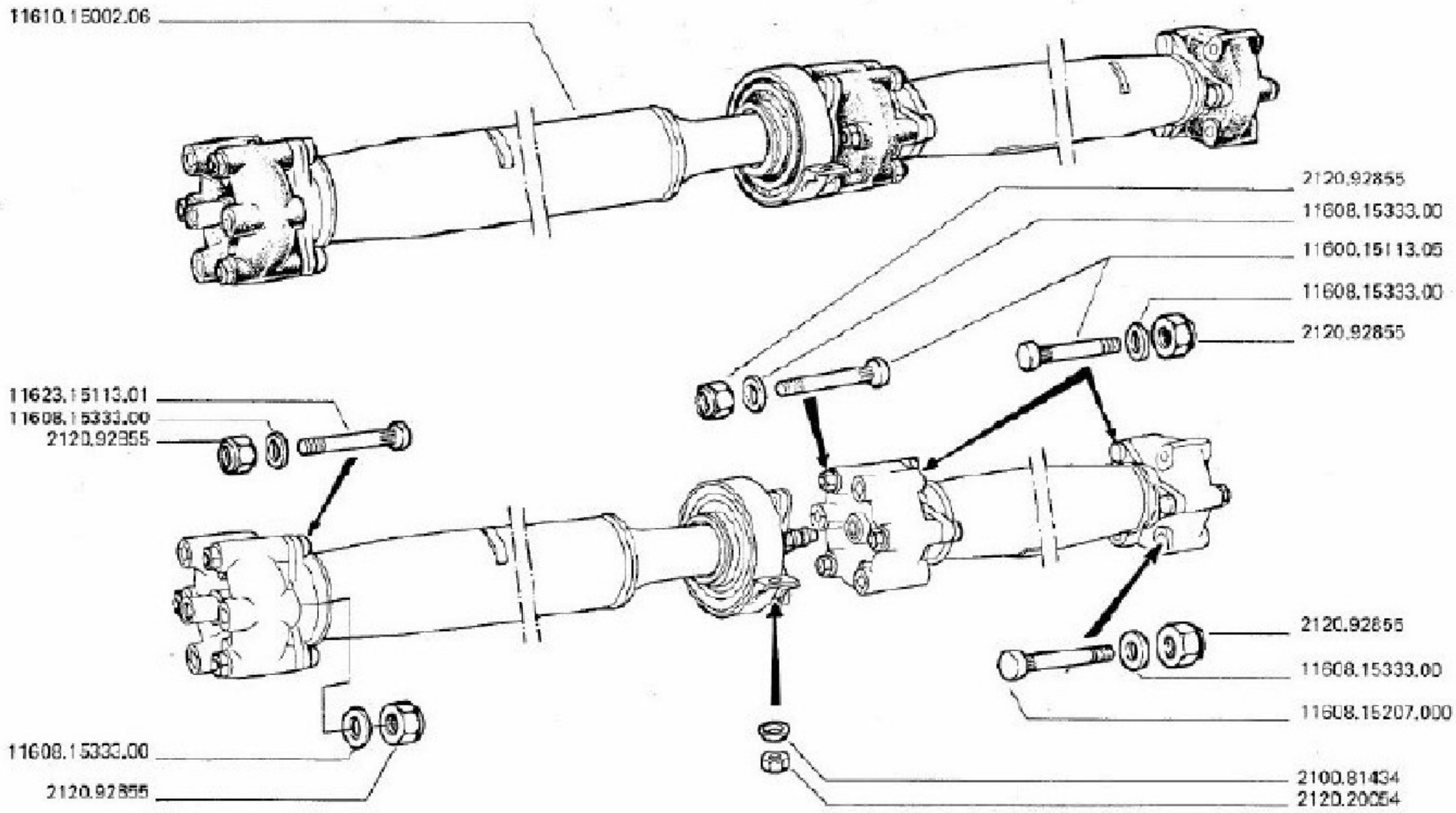

TAV. 10.01/0

ALBERI E GIUNTI DI TRASMISSIONE
ARBRES ET JOINTS DE TRANSMISSION
PROPELLER SHAFT AND JOINTS
GELENKWELLEN UND GELENKE
EJES Y JUNTAS DE TRANSMISSION

MODIFICA	N. ORDINAZIONE	QT.	DENOMINAZIONE	DÉSIGNATION	DESCRIPTION	BENENNUNG	DENOMINACIONES
	2100.81434.	2	RONDELLA	RONDELLE	WASHER	SCHEIBE	ARANDELA
	2120.20054	2	DADO	ECROU	NUT	MUTTER	TUERCA
	2120.92855	18	DADO	ECROU	NUT	MUTTER	TUERCA
	11600.15113.05	9	VITE	VIS	SCREW	SCHRAUBE	TORNILLO
	11608.15207.00	3	VITE	VIS	SCREW	SCHRAUBE	TORNILLO
	11608.15333.00	18	RONDELLA	RONDELLE	WASHER	SCHEIBE	ARANDELA
	11610.15002.06	1	ALBERO TRASMISS.	TRANSMISSION	DRIVE SHAFT	ANTRIEB	TRANSMISSION
	11623.15113.01	3	VITE	VIS	SCREW	SCHRAUBE	TORNILLO

PARTICOLARI ALBERO DI TRASMISSIONE
DETAIL DE L'ARBRE DE TRANSMISSION
PROPELLER SHAFT DETAILS
EINZELTEILE DER GELENKWELLE
DETALLES DEL EJE DE TRANSMISSION

TAV. 10.02

1ª	EDIZIONE	1974	APRILE	
1st	EDITION		APRIL	
1e	EDITION		APRIL	
1.	AUSGABE		APRIL	
1ª	EDICION		ABRIL	

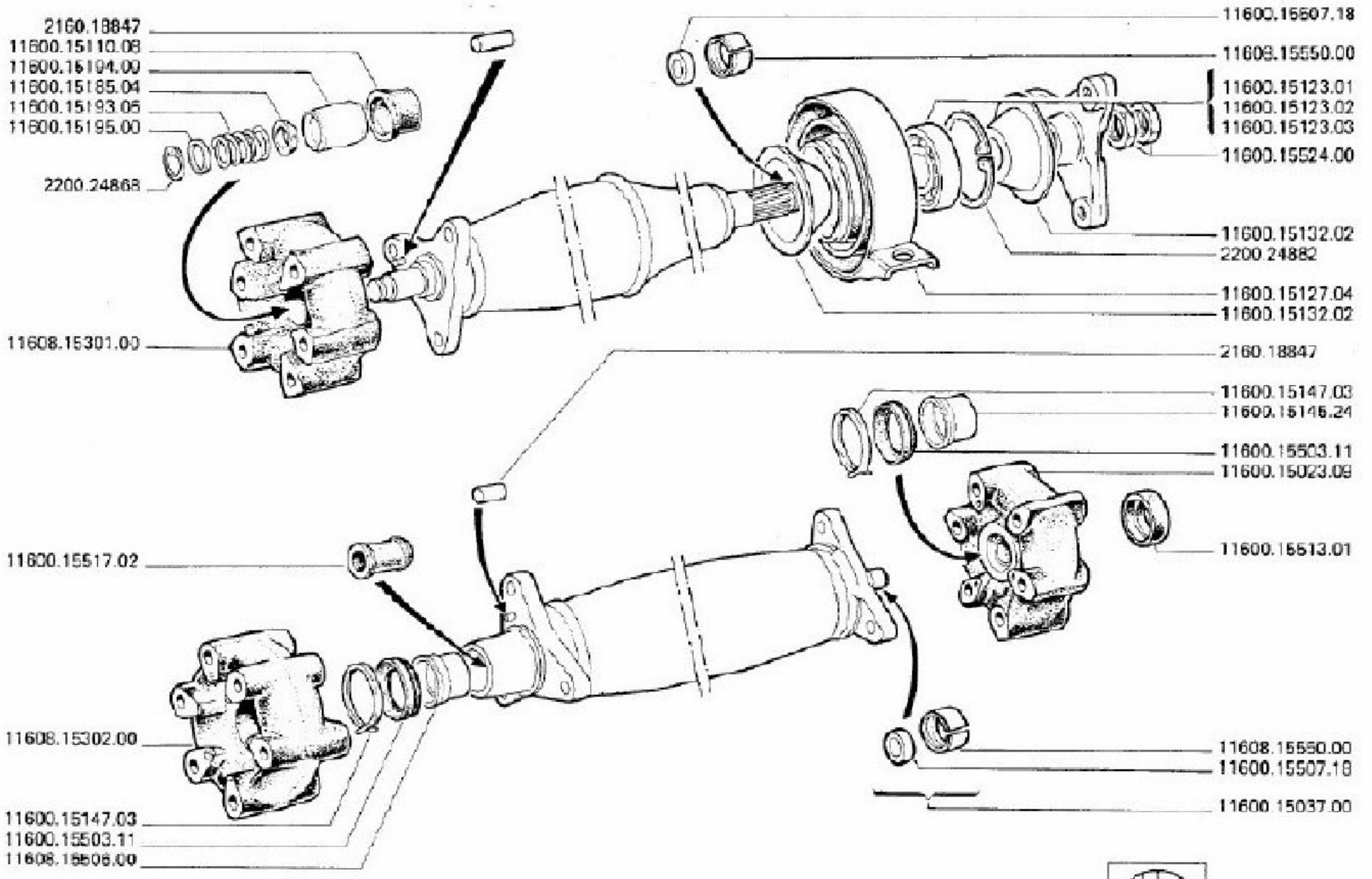

N. 6553

Alfetta GT

TAV. 10.0270

PARTICOLARI ALBERO DI TRASMISSIONE
DETAIL DE ARBRE DE TRANSMISSION
PROPELLER SHAFT DETAILS
EINZELTEILE DER GELENKWELLE
DETALLES DEL EJE DE TRANSMISION

MODIFICA	N. ORDINAZIONE		QT.	DENOMINAZIONE	DESIGNATION	DESCRIPTION	BENENNUNG	DENOMINACIONES
	2160.18847		12	SPINA	BOUCHON DILATATION	CORE PLUG	DEHNSCHRAUBE	TAPON EXPANSION
	2200.24868		1	ANELLO ELASTICO	JONC DE RETENUE	RETAINER RING	SPRENGRING	ANILLO ELASTICO
	2200.24882		1	ANELLO ELASTICO	JONC DE RETENUE	RETAINER RING	SPRENGRING	ANILLO ELASTICO
	11600.15023.09		1	GIUNTO ELASTICO	JOINT DE CAOUTCHOUC	RUBBER JOINT	GUMMIPACKUNG	JUNTA DE GOMA
	11600.15037.00		2	SEDE CON BOCCOLA	CUVETTE DE ROTULE	BALL SEAT	KUGELSITZ	ASIENTO ESFERICO
	11600.15110.08		1	GOMMINO	CAOUTCHOUC	GROMMET	GUMMITEIL	GOMITA
	11600.15123.01	*	1	CUSCINETTO	ROULEMENT A BILLES	BALL BEARING	KUGELLAGER	COJINETE DE BOLAS
	11600.15123.02	*	1	CUSCINETTO	ROULEMENT A BILLES	BALL BEARING	KUGELLAGER	COJINETE DE BOLAS
	11600.15123.03	*	1	CUSCINETTO	ROULEMENT A BILLES	BALL BEARING	KUGELLAGER	COJINETE DE BOLAS
	11600.15127.04		1	SUPPORTO	SUPPORT	SUPPORT	LAGERUNG	SOPORTE
	11600.15132.02		2	SCODELLINO	COUPELLE	CUP	TELLER	CAZOLETA
	11600.15145.24		1	BOCCOLA	BAGUE	BUSHING	BUECHSE	CASQUILLO
	11600.15147.03		2	ANELLO ELASTICO	JONC DE RETENUE	RETAINER RING	SPRENGRING	ANILLO ELASTICO
	11600.15185.04		1	BOCCOLA SFERICA	BAGUE	BUSHING	BUECHSE	CASQUILLO
	11600.15193.05		1	MOLLA	RESSORT HELIC.CYLIND	HELICAL SPRING	SCHRAUBENFEDER	MUELLE HELICOIDAL
	11600.15194.09		1	BUSSOLA	BAGUE	BUSHING	HUELSE	BUJE
	11600.15195.00		1	RONDELLA	RONDELLE	WASHER	SCHEIBE	ARANDELLA
	11600.15509.11		2	GOMMINO	CAOUTCHOUC	GROMMET	GUMMITEIL	GOMITA
	11600.15507.18		2	BOCCOLA SFERICA	BAGUE	BUSHING	BUECHSE	CASQUILLO
	11600.15513.01		1	GOMMINO	CAOUTCHOUC	GROMMET	GUMMITEIL	GOMITA
	11600.15517.02		1	GOMMINO	CAOUTCHOUC	GROMMET	GUMMITEIL	GOMITA

PARTICOLARI ALBERO DI TRASMISSIONE
DETAIL DE L'ARBRE DE TRANSMISSION
PROPELLER SHAFT DETAILS
EINZELTEILE DER GELENKWELLE
DETALLES DEL EJE DE TRANSMISSION

TAV. 10.02

1ª EDIZIONE 1974 APRILE
1st EDITION APRIL
1e EDITION APRIL
1. AUSGABE APRIL
1ª EDICION ABRIL

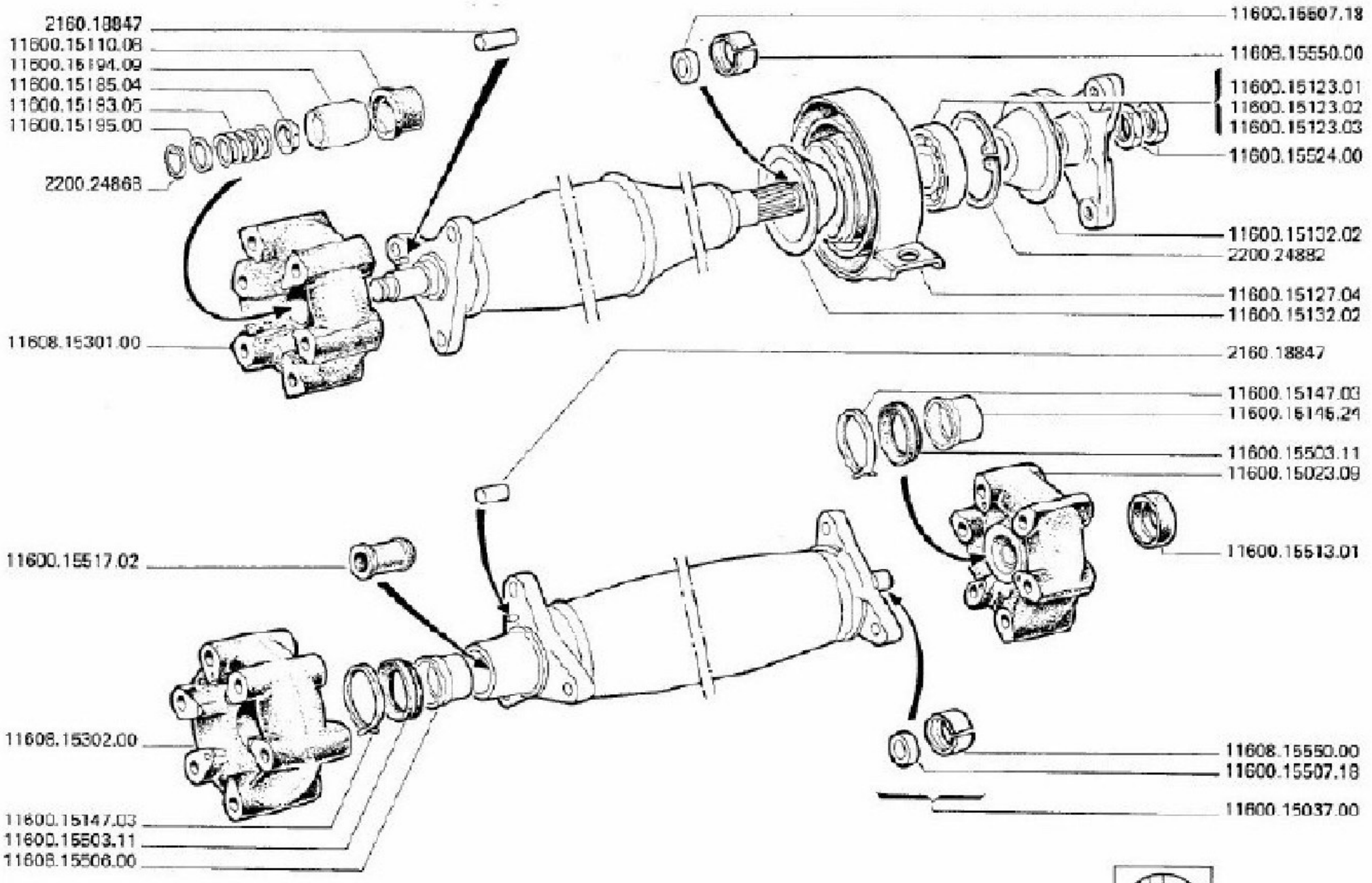

M. 6863

Alfetta GT

TAV. 10.02/0

PARTICOLARI ALBERO DI TRASMISSIONE
DETAIL DE ARBRE DE TRANSMISSION
PROPELLER SHAFT DETAILS
EINZELTEILE DER GELENKWELLE
DETALLES DEL EJE DE TRANSMISION

MODIFICA	N. ORDINAZIONE	QT.	DENOMINAZIONE	DESIGNATION	DESCRIPTION	BENENNUNG	DENOMINACIONES
	11600.15524.00	2	DADO	ECROU	NUT	MUTTER	TUERCA
	11608.15301.00	1	GIUNTO ELASTICO	JOINT DE CAOUTCHOUC	RUBBER JOINT	GUMMIPACKUNG	JUNTA DE GOMA
	11608.15302.00	1	GIUNTO ELASTICO	JOINT DE CAOUTCHOUC	RUBBER JOINT	GUMMIPACKUNG	JUNTA DE GOMA
	11608.15506.00	1	BOCCOLA	BAGUE	BUSHING	BUECHSE	CASQUILLO
	11608.15550.00	2	SEDE SFERICA	CUVETTE DE ROTULE	BALL SEAT	KUGELSITZ	ASIENTO ESFERICO
*	ALTERNATIVA			ALTERNATIVE	ALTERNATIVE	MAHLWEISE	ALTERNATIVA

SERBATOIO E TUBI COMANDO IDRAULICO FRIZIONE
RESERVOIR ET TUYAUTERIE DE COMMANDE HYDRAULIQUE EMBRAYAGE
CLUTCH FLUID RESERVOIR AND PIPING
BEHALTER U. LEITUNGEN F. HYDR. KUPPLUNGSBETATIGUNG
DEPOSITO Y TUBERIAS MANDO HIDRAULICO EMBRAGUE

TAV. 11.10

1ª	EDIZIONE	1974	APRILE
1st	EDITION		APRIL
1re	EDITION		APRIL
1.	AUSGABE		APRIL
1ra	EDICION		APRIL

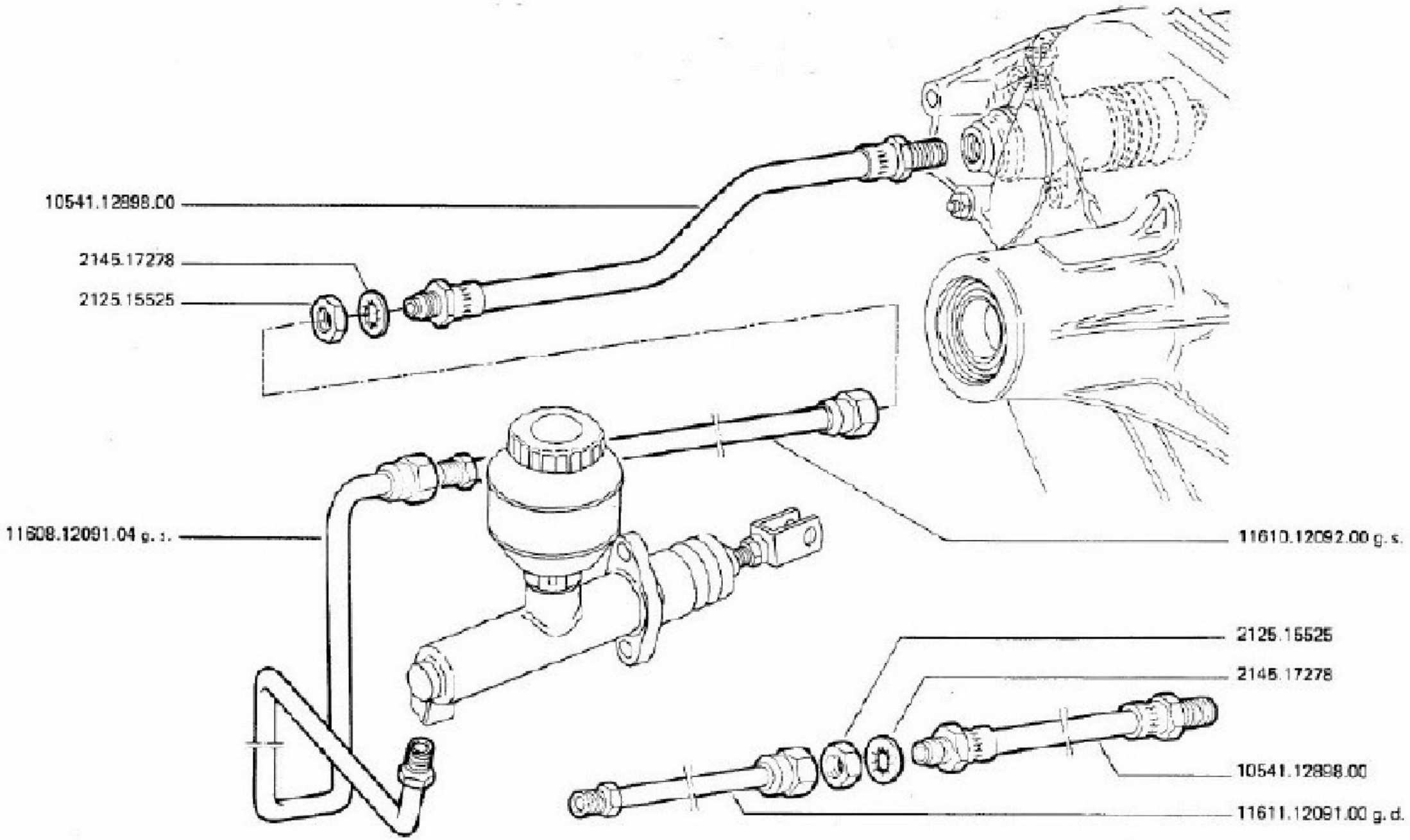

N. 6355

Alfetta GT

TAV. 11.10/0

SERBATOIO E TUBI COMANDO IDRAULICO FRIZIONE
RESERVOIR ET TUYAUTERIE DE COMMANDE HYDRAULIQUE EMBRAYAGE
CLUTCH FLUID RESERVOIR AND PIPING
BEHALTER U. LEITUNGEN F. HYDR. KUPPLUNGSBETATIGUNG
DEPOSITO Y TUBERIAS MANDO HIDRAULICO EMBRAGUE

MODIFICA	N. ORDINAZIONE		QT.	DENOMINAZIONE	DESIGNATION	DESCRIPTION	BENENNUNG	DENOMINACIONES
	2125.15525		1	DADO	ECROU	NUT	MUTTER	TUERCA
	2145.17278		1	RONDELLA	RONDELLE	WASHER	SCHEIBE	ARANDELLA
	10541.12898.00		1	TUBO FLESSIBILE	TUBE ENTRETOISE	DISTANCE TUBE	ABSTANDSROHR	TUBO SEPARADOR
	11608.12091.04	*	1	TUBO RIGIDO	TUBE	PIPE	ROHR	TUBO
	11610.12092.00	*	1	TUBO RIGIDO	TUBE	PIPE	ROHR	TUBO
	11611.12091.00	-	1	TUBO RIGIDO	TUYAU DE LIAISON	CONNECTING PIPE	VERBINDUNGSROHR	TUBO DE UNION

* PER G.S.
\- PER G.D.

POMPA COMANDO FRIZIONE
MAITRE-CYLINDRE COMMANDE EMBRAYAGE
CLUTCH MASTER CYLINDER
GEBERZYLINDER KUPPLUNGSBETÄTIGUNG
BOMBA MANDO EMBRAGUE

ATE

TAV. 11.20

1ª EDIZIONE APRILE
1st EDITION APRIL
1e EDITION APRIL
1. AUSGABE APRIL
1ª EDICION APRIL
1974

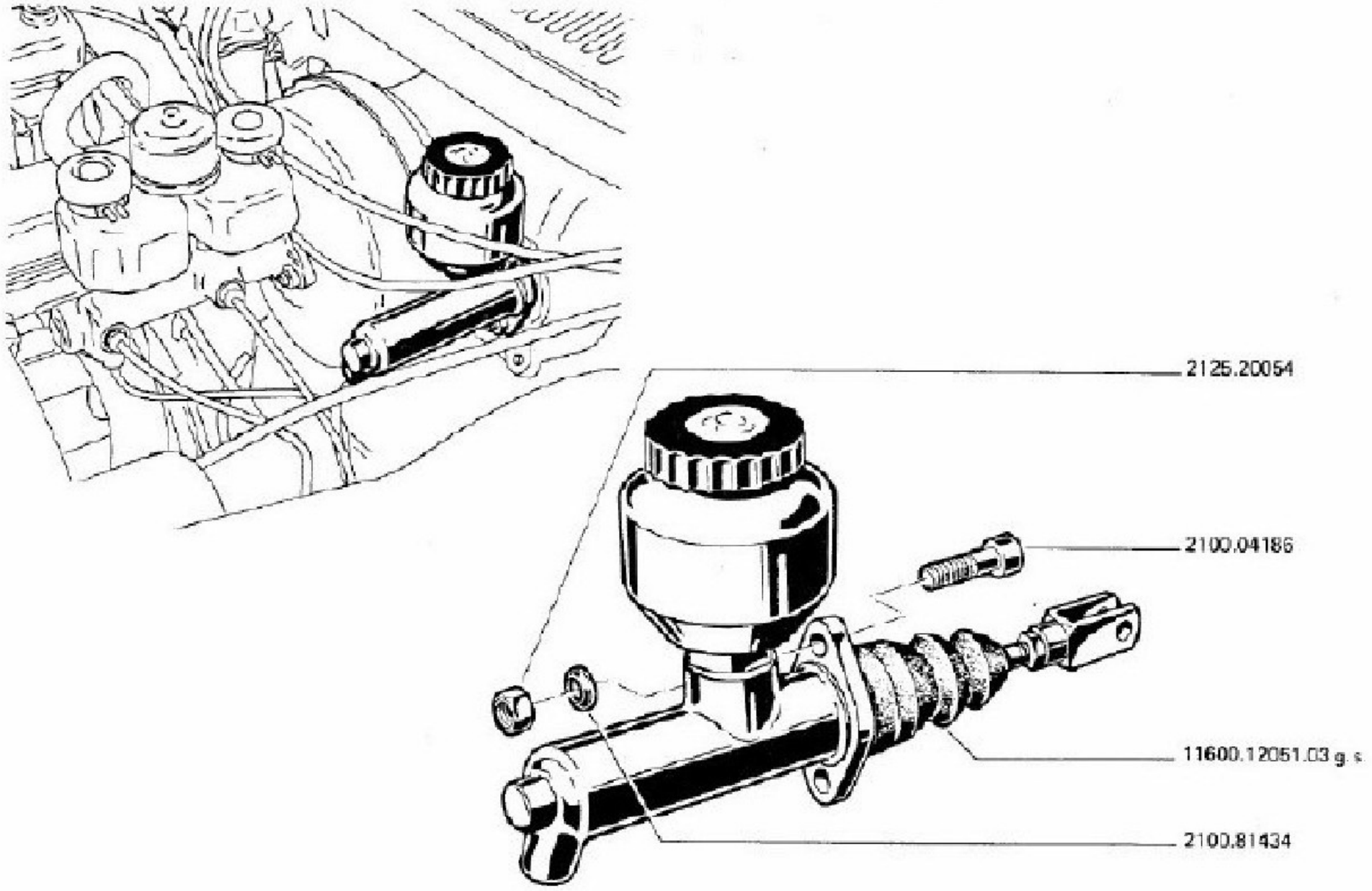

N. 6585

Alfetta GT

TAV. 11.2070

POMPA COMANDO FRIZIONE - ATE
MAITRE-CYLINDRE COMMANDE - EMBRAYAGE - ATE
CLUTCH MASTER CYLINDER
GEBERZYLINDER KUPPLUNGSBETATIGUNG
BOMBA MANDO EMBRAGUE

MODIFICA	N. ORDINAZIONE		QT.	DENOMINAZIONE	DÉSIGNATION	DESCRIPTION	BENENNUNG	DENOMINACIONES
	2100.04186		2	VITE	VIS	SCREW	SCHRAUBE	TORNILLO
	2100.81434		2	RONDELLA	RONDELLE	WASHER	SCHEIBE	ARANDELLA
	2125.20054		2	DADO	ECROU	NUT	MUTTER	TUERCA
	11600.12051.03	*	1	POMPA FRIZIONE	MAITRE CYL. EMBRAYAG	CLUTCH M. CYLINDER	KUPPLUNGEBERZYLINDER	BOMBA EMBRAGUE

* PER G.S.

POMPA COMANDO FRIZIONE
MAITRE-CYLINDRE COMMANDE EMBRAYAGE
CLUTCH MASTER CYLINDER
GEBERZYLINDER KUPPLUNGSBETÄTIGUNG
BOMBA MANDO EMBRAGUE

BONALDI

TAV. 11.21

1°	EDIZIONE	APRILE	1974
1ère	EDITION	AVRIL	
1st	EDITION	APRIL	
1.	AUSGABE	APRIL	
1ª	EDICION	ABRIL	

DATA REVISIONI AGGIORNAMENTO

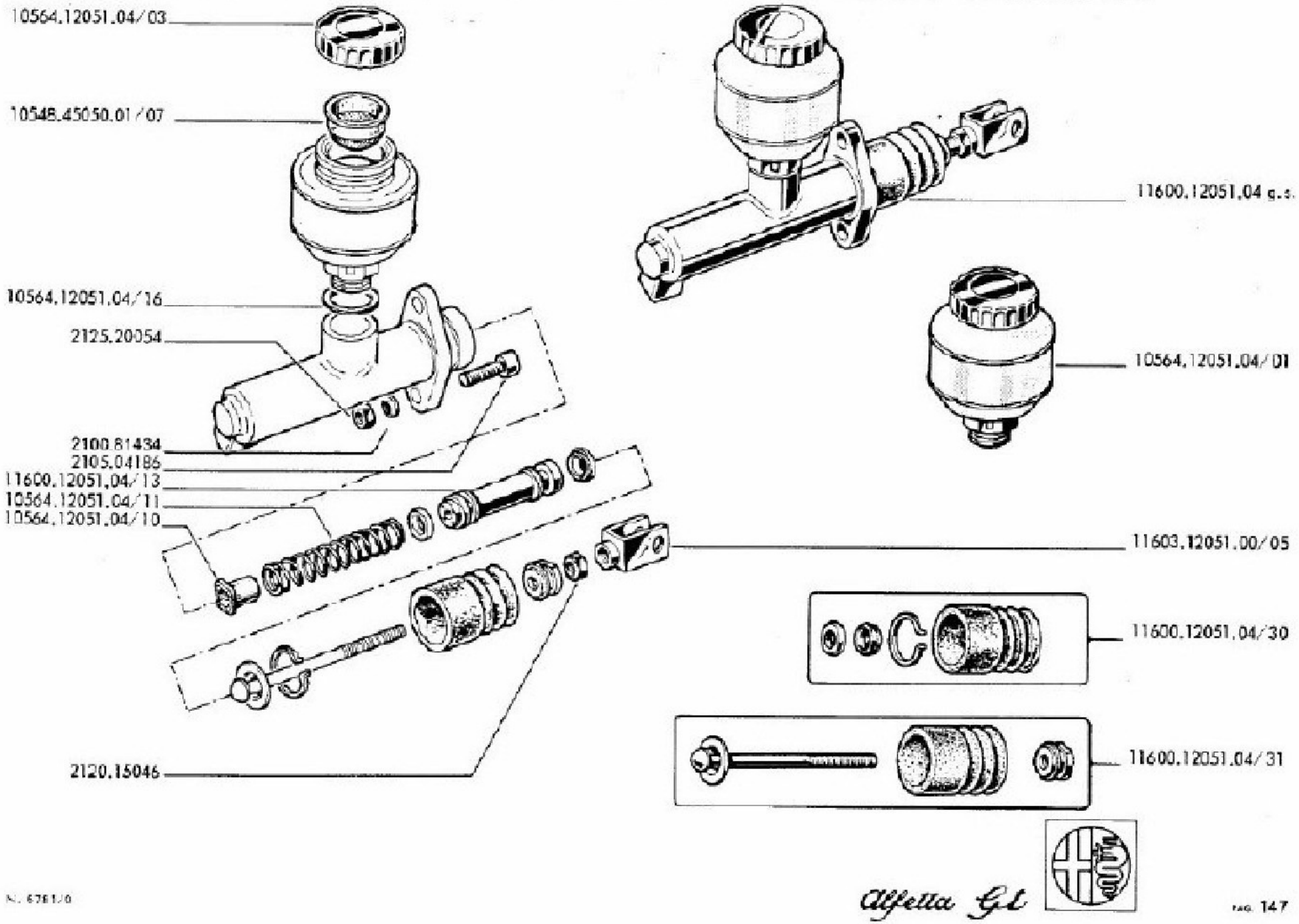

N. 6781/0

Alfetta GT

TAV. 11.21/0

POMPA COMANDO FRIZIONE -BONALDI
MAITRE-CYLINDRE COMMANDE EMBRAYAGE
CLUTCH MASTER CYLINDER
GEBERZYLINDER KUPPLUNGSBETATIGUNG
BOMBA MANDO EMBRAGUE

MODIFICA	N. ORDINAZIONE	QT.	DENOMINAZIONE	DESIGNATION	DESCRIPTION	BENENNUNG	DENOMINACIONES
	2100.81434	2	RONDELLA	RONDELLE	WASHER	SCHEIBE	ARANDELLA
	2105.04186	2	VITE	VIS	SCREW	SCHRAUBE	TORNILLO
	2120.15046	1	DADO	ECROU	NUT	MUTTER	TUERCA
	2125.20054	2	DADO	ECROU	NUT	MUTTER	TUERCA
	10548.45050.01/07	1	FILTRO	FILTRE	FILTER	FILTER	FILTRO
	10564.12051.04/01	1	SERBATOIO	RESERVOIR	TANK	BEHAELTER	DEPOSITO
	10564.12051.04/03	1	TAPPO	BOUCHON	PLUG	VERSCHLUSSCHRAUBE	TAPON
	10564.12051.04/10	1	GUIDAMOLLA		WINDOW GUIDE		
	10564.12051.04/11	1	MOLLA	RESSORT HELIC.CYLIND	HELICAL SPRING	SCHRAUBENFEDER	MUELLE HELICOIDAL
	10564.12051.04/16	1	GUARNIZIONE	JOINT D ETANCHEITE	SEAL	DICHTUNG	GUARNICION
	11600.12051.04 *	1	POMPA FRIZIONE	MAITRE CYL. EMBRAYAG	CLUTCH M. CYLINDER	KUPPLUNGEBERZYLINDER	BOMBA EMBRAGUE
	11600.12051.04/13	1	PISTONCINO	PISTON	PISTON	KOLBEN	PISTON
	11600.12051.04/30	1	GR.REVISIONE	COLLECTION-REPARATIO	OVERHAUL KIT	GRUPPE REPARATUR	GRUPO REVISION
	11600.12051.04/31	1	GR.RICAMBI	COLLECTION-REPARATIO	REPAIR KIT	GRUPPE ERSATZTEILE	GRUPO REPUESTOS
	11603.12051.00/05	1	FORCELLA	FOURCHETTE	FORK	GABEL	HORQUILLA

* PER G.S.

POMPA COMANDO FRIZIONE
MAITRE-CYLINDRE COMMANDE EMBRAYAGE
CLUTCH MASTER CYLINDER
GEBERZYLINDER KUPPLUNGSBETÄTIGUNG
BOMBA MANDO EMBRAGUE

BONALDI

TAV. 11.21/1

1	EDIZIONE	APRILE	1974
	EDITION	AVRIL	
	EDITION	APRIL	
	AUSGABE	APRIL	
	EDICION	ABRIL	

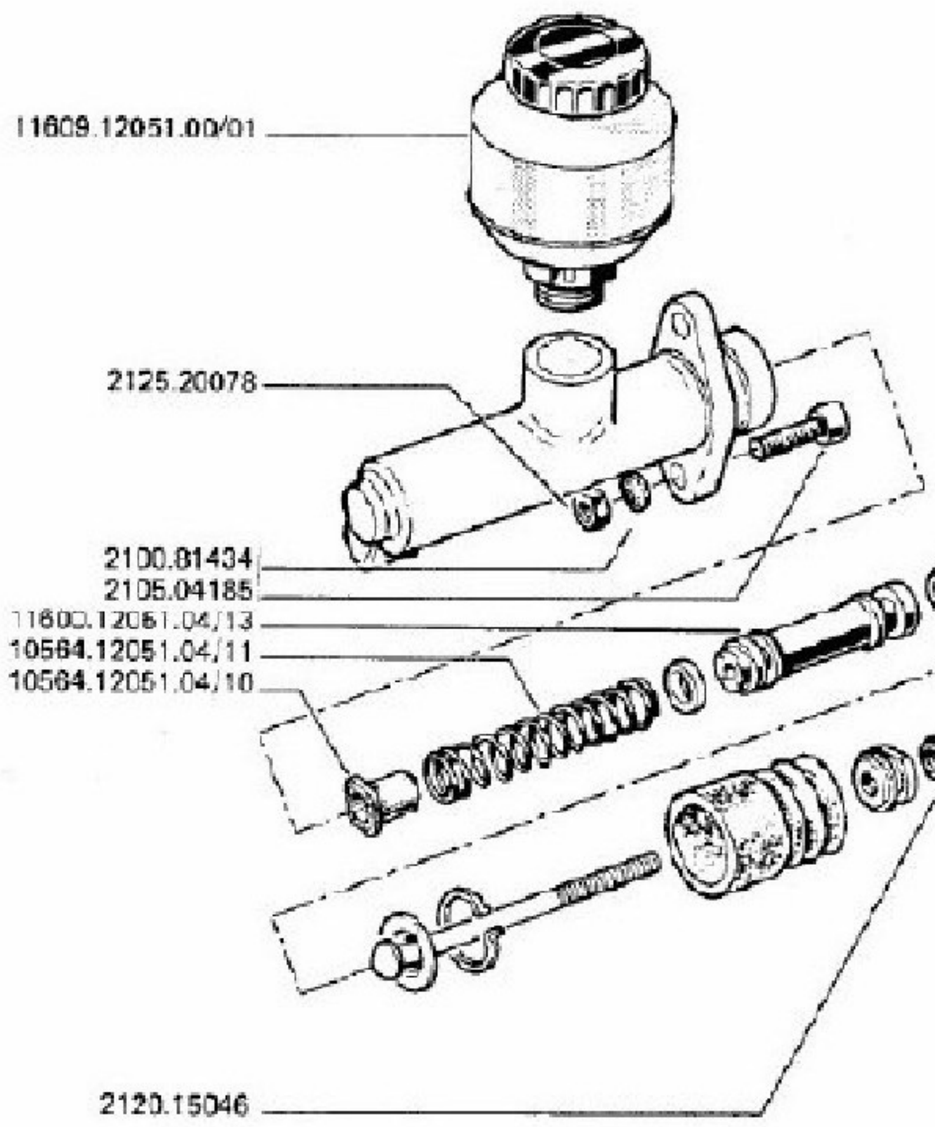

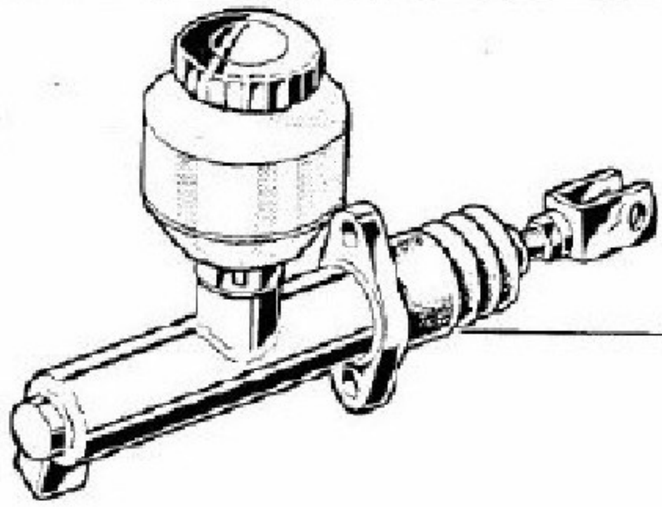

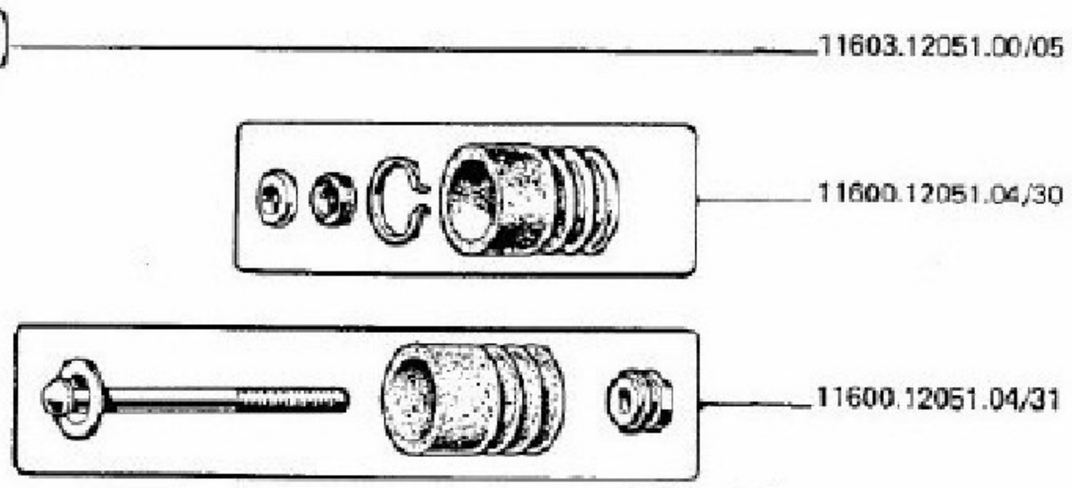

N. 6765/0

Alfetta GT

TAV. 11.21/1 POMPA COMANDO FRIZIONE -BONALDI
MAITRE-CYLINDRE COMMANDE EMBRAYAGE
CLUTCH MASTER CYLINDER
GEBERZYLINDER KUPPLUNGSBETATIGUNG
BOMBA MANDO EMBRAGUE

MODIFICA	N. ORDINAZIONE	QT.	DENOMINAZIONE	DÉSIGNATION	DESCRIPTION	BENENNUNG	DENOMINACIONES
	2100.81434	2	RONDELLA	RONDELLE	WASHER	SCHEIBE	ARANDELLA
	2105.04185	2	VITE	VIS	SCREW	SCHRAUBE	TORNILLO
	2120.15046	1	DADO	ECROU	NUT	MUTTER	TUERCA
	2125.20078	2	DADO	ECROU	NUT	MUTTER	TUERCA
	10564.12051.04/10	1	GUIDAMOLLA		WINDOW GUIDE		
	10564.12051.04/11	1	MOLLA	RESSORT HELIC.CYLIND	HELICAL SPRING	SCHRAUBENFEDER	MUELLE HELICOIDAL
	11600.12051.04/13	1	PISTONCINO	PISTON	PISTON	KOLBEN	PISTON
	11600.12051.04/30	1	GR.REVISIONE	COLLECTION-REPARATIO	OVERHAUL KIT	GRUPPE REPARATUR	GRUPO REVISION
	11600.12051.04/31	1	GR.RICAMBI	COLLECTION-REPARATIO	REPAIR KIT	GRUPPE ERSATZTEILE	GRUPO REPUESTOS
	11603.12051.00/05	1	FORCELLA	FOURCHETTE	FORK	GABEL	HORQUILLA
	11609.12051.00 *	1	POMPA FRIZIONE	MAITRE CYL. EMBRAYAG	CLUTCH M. CYLINDER	KUPPLUNGSBERZYLINDER	BOMBA EMBRAGUE
	11609.12051.00/01	1	SERBATOIO	RESERVOIR	TANK	BEHAELTER	DEPOSITO

* PER G.D.

CILINDRETTO COMANDO FRIZIONE
CYLINDRE-RECEPTEUR D'EMBRAYAGE
CLUTCH SLAVE CYLINDER
NEHMERZYLINDER KUPPLUNGSBETÄTIGUNG
CILINDRITO MANDO EMBRAGUE

ATE

TAV. 11.30

1ª	EDIZIONE	1974	APRILE
1st	EDITION		AVRIL
1.	EDITION		APRIL
1.	AUSGABE		APRIL
1ª	EDICION		APRIL

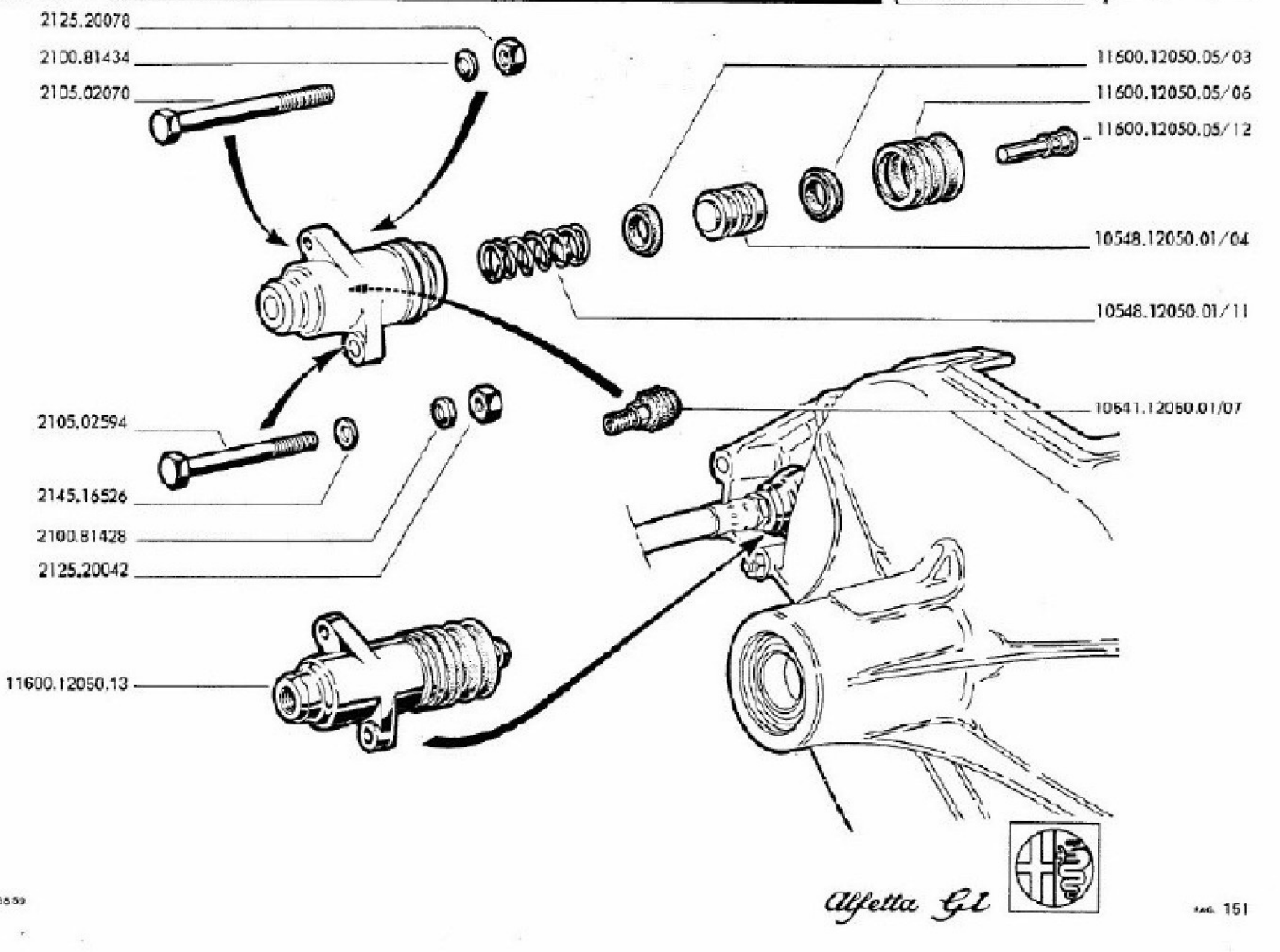

TAV. 11.30/0

CILINDRETTO COMANDO FRIZIONE - ATE
CYLINDRE-RECEPTEUR D EMBRAYAGE
CLUTCH SLAVE CYLINDER
NEHMERZYLINDER KUPPLUNGSBETATIGUNG
CILINDRITO MANDO EMBRAGUE

MODIFICA	N. ORDINAZIONE	QT.	DENOMINAZIONE	DESIGNATION	DESCRIPTION	BENENNUNG	DENOMINACIONES
	2100.81428	1	RONDELLA	RONDELLE	WASHER	SCHEIBE	ARANDELLA
	2100.81434	1	RONDELLA	RONDELLE	WASHER	SCHEIBE	ARANDELLA
	2105.02070	1	VITE	VIS	SCREW	SCHRAUBE	TORNILLO
	2105.02594	1	VITE	VIS	SCREW	SCHRAUBE	TORNILLO
	2125.20042	1	DADO	ECROU	NUT	MUTTER	TUERCA
	2125.20078	1	DADO	ECROU	NUT	MUTTER	TUERCA
	2145.16526	1	RONDELLA	RONDELLE	WASHER	SCHEIBE	ARANDELLA
	10541.12050.01/07	1	VITE SPURGO	VIS DE PURGE	BLEEDER SCREW	ABLASSCHRAUBE	TORNILLO DE PURGA
	10548.12050.01/04	1	PISTONCINO	PISTON	PISTON	KOLBEN	PISTON
	10548.12050.01/11	1	MOLLA	RESSORT HELIC.CYLIND	HELICAL SPRING	SCHRAUBENFEDER	MUELLE HELICOIDAL
	11600.12050.05/03	2	ANELLO TENUTA	JOINT	SEAL	DICHTRING	JUNTA
	11600.12050.05/06	1	PROTEZIONE	PROTECTEUR	PROTECTION	SCHUTZ	PROTECCION
	11600.12050.05/12	1	PUNTALE	TIGE DE POUSSEE	PUSH ROD	DRUCKSTANGE	PUNTAL
	11600.12050.13	1	CILINDRETTO	CYLINDRE	CYLINDER	NEHMERZYLINDER	CILINDRITO

CILINDRETTO COMANDO FRIZIONE
CYLINDRE RECEPTEUR D'EMBRAYAGE
CLUTCH SLAVE CYLINDER
NEHMERZYLINDER KUPPLUNGSBETÄTIGUNG
CILINDRITO MANDO EMBRAGUE

BONALDI

TAV. 11.31

1ª	EDIZIONE	1974	APRILE
1ère	EDITION		AVRIL
1st	EDITION		APRIL
1.	AUSGABE		APRIL
1ª	EDICION		ABRIL

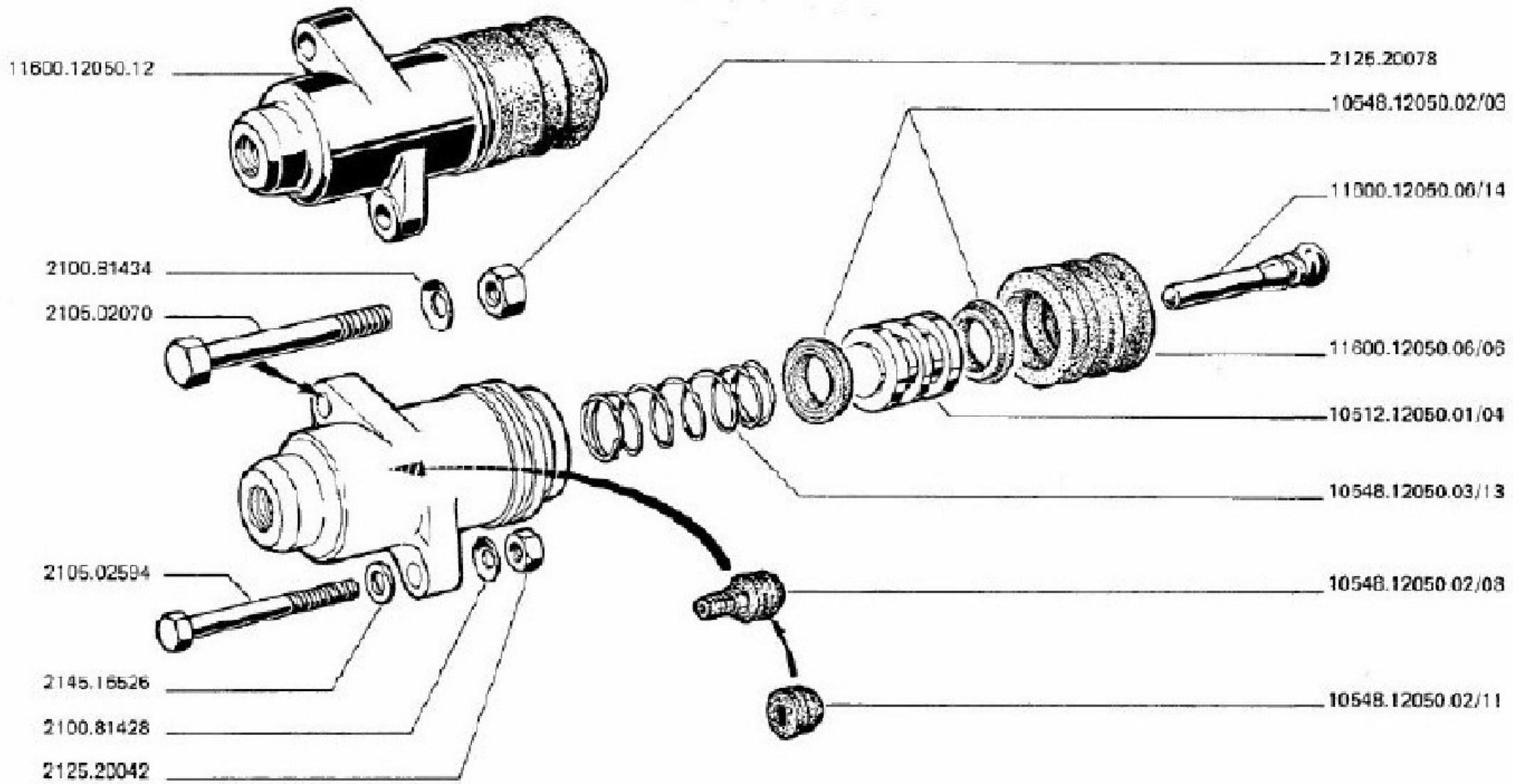

N. 6858

Alfetta GT

TAV. 11.31/0

CILINDRETTO COMANDO FRIZIONE - BONALDI
CYLINDRE-RECEPTEUR D EMBRAYAGE - BONALDI
CLUTCH SLAVE CYLINDER
NEHMERZYLINDER KUPPLUNGSBETATIGUNG
CILINDRITO MANDO EMBRAGUE

MODIFICA	N. RIFERIMENTO	QT.	DENOMINAZIONE	DESIGNATION	DESCRIPTION	BENENNUNG	DENOMINACIONES
	2100.81428	1	RONDELLA	RONDELLE	WASHER	SCHEIBE	ARANDELLA
	2100.81434	1	RONDELLA	RONDELLE	WASHER	SCHEIBE	ARANDELLA
	2105.02070	1	VITE	VIS	SCREW	SCHRAUBE	TORNILLO
	2105.02594	1	VITE	VIS	SCREW	SCHRAUBE	TORNILLO
	2125.20042	1	DADO	ECROU	NUT	MUTTER	TUERCA
	2125.20078	1	DADO	ECROU	NUT	MUTTER	TUERCA
	2145.16526	1	RONDELLA	RONDELLE	WASHER	SCHEIBE	ARANDELLA
	10512.12050.01/04	1	PISTONCINO	PISTON	PISTON	KOLBEN	PISTON
	10548.12050.02/03	2	ANELLO TENUTA	JOINT	SEAL	DICHTRING	JUNTA
	10548.12050.02/08	1	VITE SPURGO	VIS DE PURGE	BLEEDER SCREW	ABLASSSCHRAUBE	TORNILLO DE PURGA
	10548.12050.02/11	1	CAPPUCCIO	CAPUCHON	BOOT	KAPPE	CAPUCHON
	10548.12050.03/13	1	MOLLA	RESSORT HELIC.CYLIND	HELICAL SPRING	SCHRAUBENFEDER	MUELLE HELICOIDAL
	11600.12050.06/06	1	PROTEZIONE	PROTECTEUR	PROTECTION	SCHUTZ	PROTECCION
	11600.12050.06/14	1	PUNTALE	TIGE DE POUSSEE	PUSH ROD	DRUCKSTANGE	PUNTAL
	11600.12050.12	1	CILINDRETTO	CYLINDRE	CYLINDER	NEHMERZYLINDER	CILINDRITO

CILINDRETTO COMANDO FRIZIONE
CYLINDRE RECEPTEUR D'EMBRAYAGE
CLUTCH SLAVE CYLINDER
NEHMERZYLINDER KUPPLUNGSBETÄTIGUNG
CILINDRITO MANDO EMBRAGUE

BREMBO

TAV. 11.32

1ª	EDIZIONE	1974	APRILE
1ère	EDITION		AVRIL
1st	EDITION		APRIL
1.	AUSGABE		APRIL
1ª	EDICION		ABRIL

DATA ULTIMO AGGIORNAMENTO

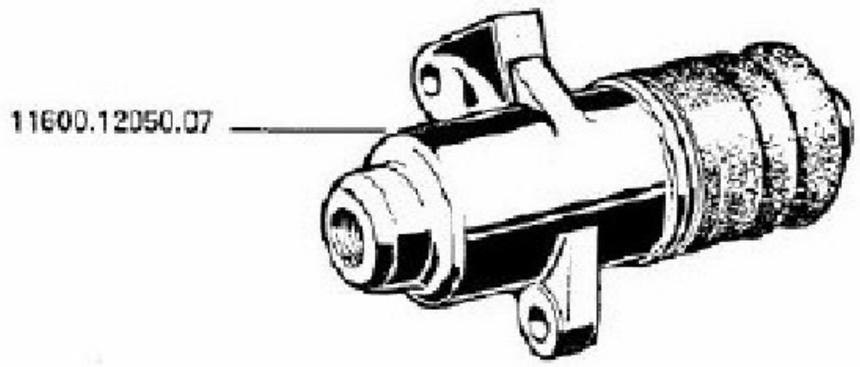

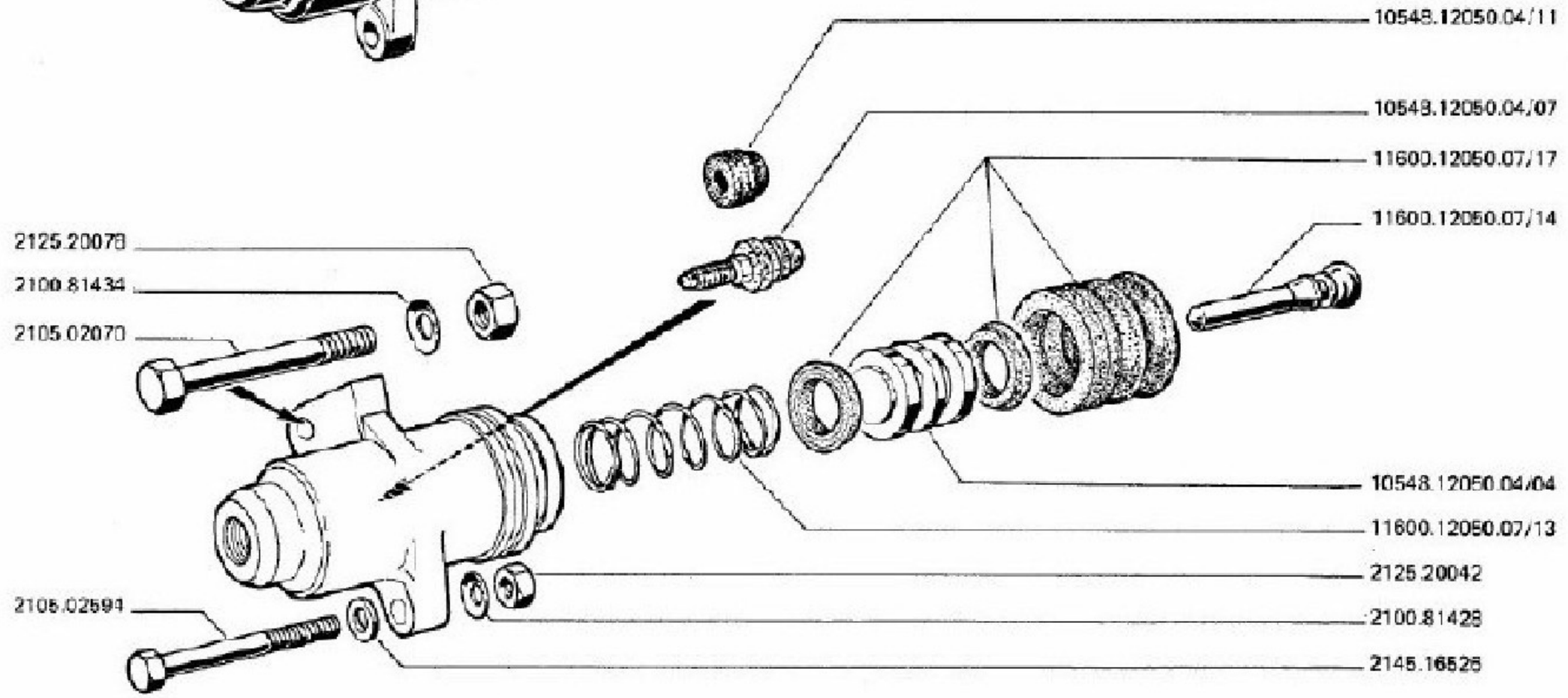

TAV. 11.32/0 CILINDRETTO COMANDO FRIZIONE
CYLINDRE-RECEPTEUR D EMBRAYAGE
CLUTCH SLAVE CYLINDER
NEHMERZYLINDER KUPPELUNGSBETATIGUNG
CILINDRITO MANDO EMBRAGUE

MODIFICA	N. ORDINAZIONE	QT.	DENOMINAZIONE	DESIGNATION	DESCRIPTION	BENENNUNG	DENOMINACIONES
	2100.81428	1	RONDELLA	RONDELLE	WASHER	SCHEIBE	ARANDELLA
	2100.81434	1	RONDELLA	RONDELLE	WASHER	SCHEIBE	ARANDELLA
	2105.02070	1	VITE	VIS	SCREW	SCHRAUBE	TORNILLO
	2105.02594	1	VITE	VIS	SCREW	SCHRAUBE	TORNILLO
	2125.20042	1	DADO	ECROU	NUT	MUTTER	TUERCA
	2125.20078	1	DADO	ECROU	NUT	MUTTER	TUERCA
	2145.16526	1	RONDELLA	RONDELLE	WASHER	SCHEIBE	ARANDELLA
	10548.12050.04/04	1	PISTONCINO	PISTON	PISTON	KOLBEN	PISTON
	10548.12050.04/07	1	VITE SPURGO	VIS DE PURGE	BLEEDER SCREW	ABLASSCHRAUBE	TORNILLO DE PURGA
	10548.12050.04/11	1	CAPPUCCIO	CAPUCHON	BOOT	KAPPE	CAPUCHON
	11600.12050.07	1	CILINDRETTO BREMBO	CYLINDRE	CYLINDER	NEHMERZYLINDER	CILINDRITO
	11600.12050.07/13	1	MOLLA	RESSORT HELIC.CYLIND	HELICAL SPRING	SCHRAUBENFEDER	MUELLE HELICOIDAL
	11600.12050.07/14	1	PUNTALE	TIGE DE POUSSEE	PUSH ROD	DRUCKSTANGE	PUNTAL
	11600.12050.07/17	1	GR.REVISIONE	COLLECTION-REPARATIO	OVERHAUL KIT	GRUPPE REPARATUR	GRUPO REVISION

1ª EDIZIONE 1974 APRILE
1re EDITION AVRIL
1st EDITION APRIL
1. AUSGABE APRIL
1ª EDICION ABRIL

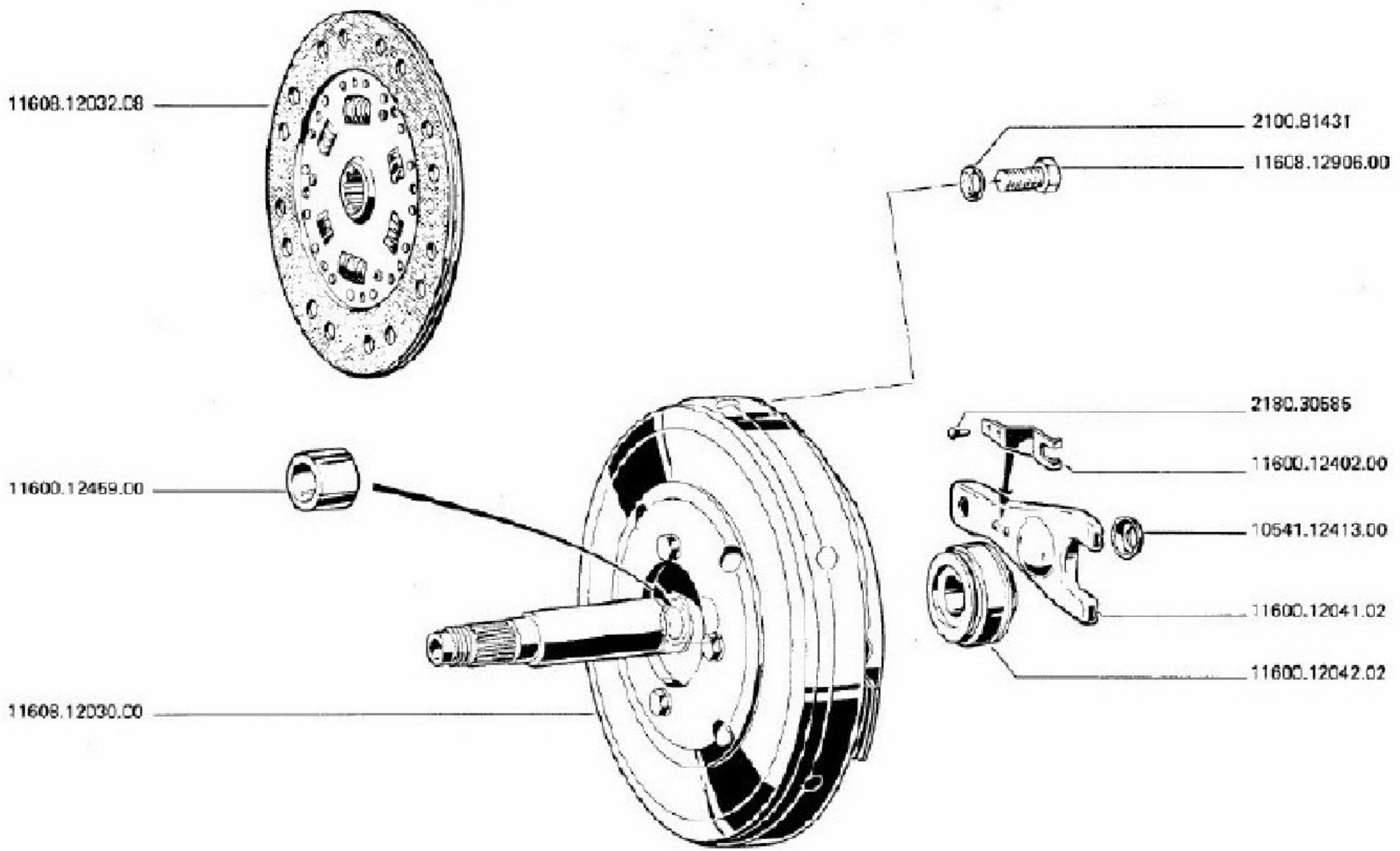

TAV. 11.50/0

FRIZIONE
EMBRAYAGE
CLUTCH
KUPPLUNG
EMBRAGUE

MODIFICA	N. ORDINAZIONE	QT.	DENOMINAZIONE	DESIGNATION	DESCRIPTION	BENENNUNG	DENOMINACIONES
	2100.61431	6	RONDELLA	RONDELLE	WASHER	SCHEIBE	ARANDELLA
	2180.30585	2	RIVETTO	RIVET	RIVET	NIET	RIVETE
	10541.12413.00	1	RONDELLA GOMMA	RONDELLE	WASHER	SCHEIBE	ARANDELLA
	11600.12041.02	1	FORCELLA	FOURCHETTE DEBRAYAGE	CLUTCH FORK	AUSRUCKGABEL	HORQUILLA EMBRAGUE
	11600.12042.02	1	SPINGIDISCO	BUTEE D EMBRAYAGE	THROWOUT BEARING	AUSRUECKLAGER	EMPUJADISCO
	11600.12402.00	1	MOLLA	RESSOR D EMBRAYAGE	CLUTCH SPRING	KUPPLUNGSDRUCKFEDER	MUELLE DEL EMBRAGUE
	11600.12459.00	1	BOCCOLA	BAGUE	BEARING	LAGERBUESCHSE	CASQUILLO
	11608.12030.00	1	FRIZIONE COMPL.	EMBRAYAGE	CLUTCH	KUPPLUNG	EMBRAGUE
	11608.12032.00	1	DISCO CONDOTTO	DISQUE D EMBRAYAGE	DRIVEN PLATE	KUPPLUNGSSCHEIBE	CONDUCTO
	11608.12906.00	6	VITE	VIS	SCREW	SCHRAUBE	TORNILLO

PARTICOLARI FRIZIONE
DETAIL DE L'EMBRAYAGE
CLUTCH COMPONENTS
EINZELTEILE DER KUPPLUNG
DETALLES EMBRAGUE

TAV. 11.51

1ª	EDIZIONE	APRILE	1974
1re	EDITION	AVRIL	
1st	EDITION	APRIL	
1.	AUSGABE	APRIL	
1ra	EDICION	ABRIL	

DETAILS NO. AGGIORNAMENTI

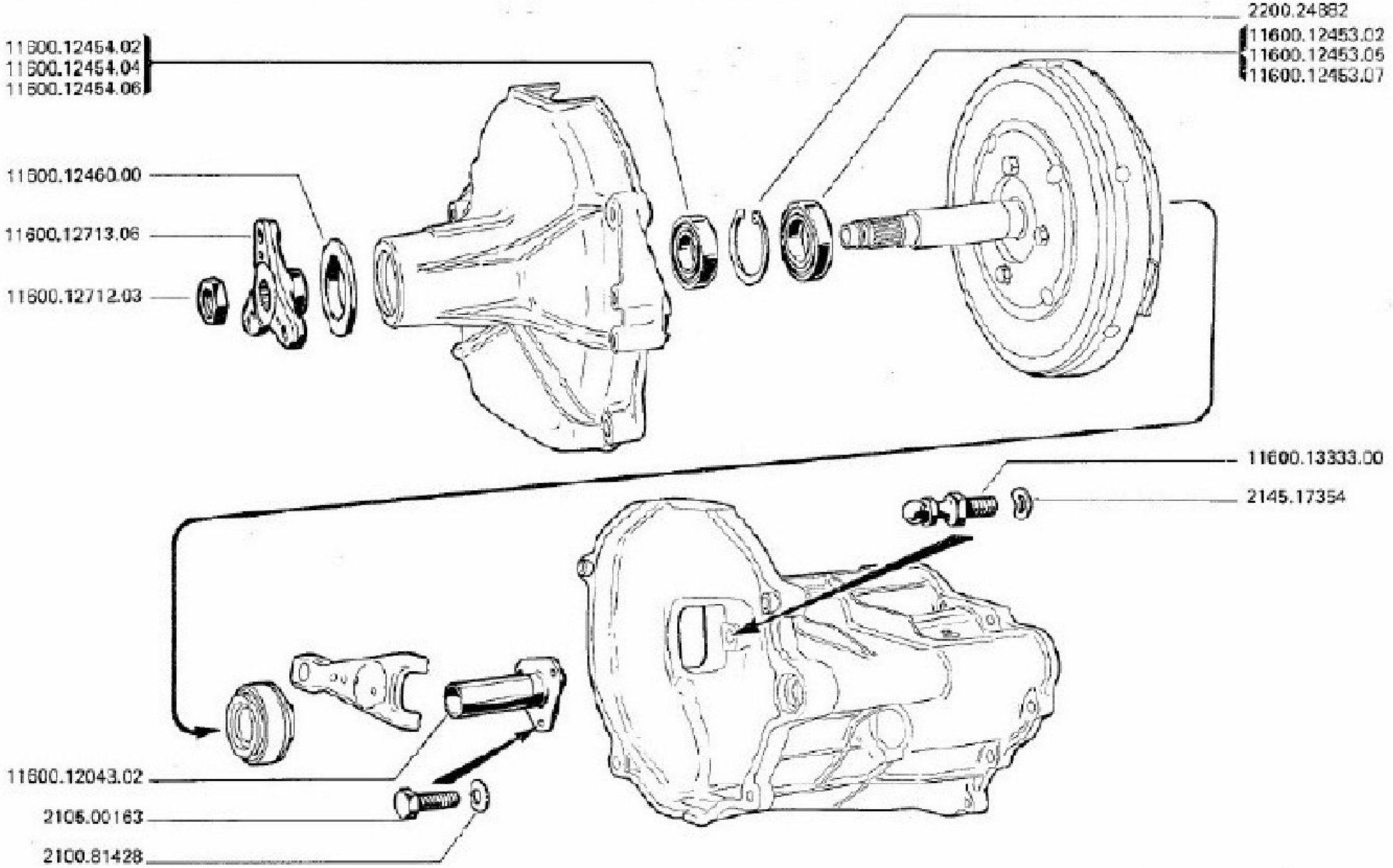

TAV. 11.51/0

PARTICOLARI FRIZIONE
DETAILS DE L EMBRAYAGE
CLUTCH COMPONENTS
EINZELTEILE DER KUPPLUNG
DETALLES EMBRAGUE

MODIFICA	N. ORDINAZIONE		QT.	DENOMINAZIONE	DESIGNATION	DESCRIPTION	BENENNUNG	DENOMINACION
	2100.81428		3	RONDELLA	RONDELLE	WASHER	SCHEIBE	ARANDELLA
	2105.00163		3	VITE	VIS	SCREW	SCHRAUBE	TORNILLO
	2145.17354		1	RONDELLA	RONDELLE	WASHER	SCHEIBE	ARANDELLA
	2200.24882		1	ANELLO	JONC DE RETENUE	RETAINER RING	SPRENGRING	ANILLO ELASTICO
	11600.12043.02		1	SUPPORTO	SUPPORT	SUPPORT	LAGERUNG	SOPORTE
	11600.12453.02	*	1	CUSCINETTO	ROULEMENT A BILLES	BALL BEARING	KUGELLAGER	COJINETE DE BOLAS
	11600.12453.05	*	1	CUSCINETTO	ROULEMENT A BILLES	BALL BEARING	KUGELLAGER	COJINETE DE BOLAS
	11600.12453.07	*	1	CUSCINETTO	ROULEMENT A BILLES	BALL BEARING	KUGELLAGER	COJINETE DE BOLAS
	11600.12454.02	*	1	CUSCINETTO	ROULEMENT A BILLES	BALL BEARING	KUGELLAGER	COJINETE DE BOLAS
	11600.12454.04	*	1	CUSCINETTO	ROULEMENT A BILLES	BALL BEARING	KUGELLAGER	COJINETE DE BOLAS
	11600.12454.06	*	1	CUSCINETTO	ROULEMENT A BILLES	BALL BEARING	KUGELLAGER	COJINETE DE BOLAS
	11600.12460.00		1	ANELLO	BAGUE	RING	RING	ANILLO
	11600.12712.03		1	DADO	ECROU	NUT	MUTTER	TUERCA
	11600.12713.06		1	FORCELLA	FOURCHETTE	FORK	GABEL	HORQUILLA
	11600.13333.00		1	PERNO	EMBOUT DE ROTULE	BALL PIN	KUGELBOLZEN	EJE DE ROTULA

* ALTERNATIVA ALTERNATIVE ALTERNATIVE WAHLWEISE ALTERNATIVA

1ª EDIZIONE 1ère EDITION 1st EDITION 1. AUSGABE 1ª EDICIÓN — APRILE AVRIL APRIL APRIL ABRIL — 1974

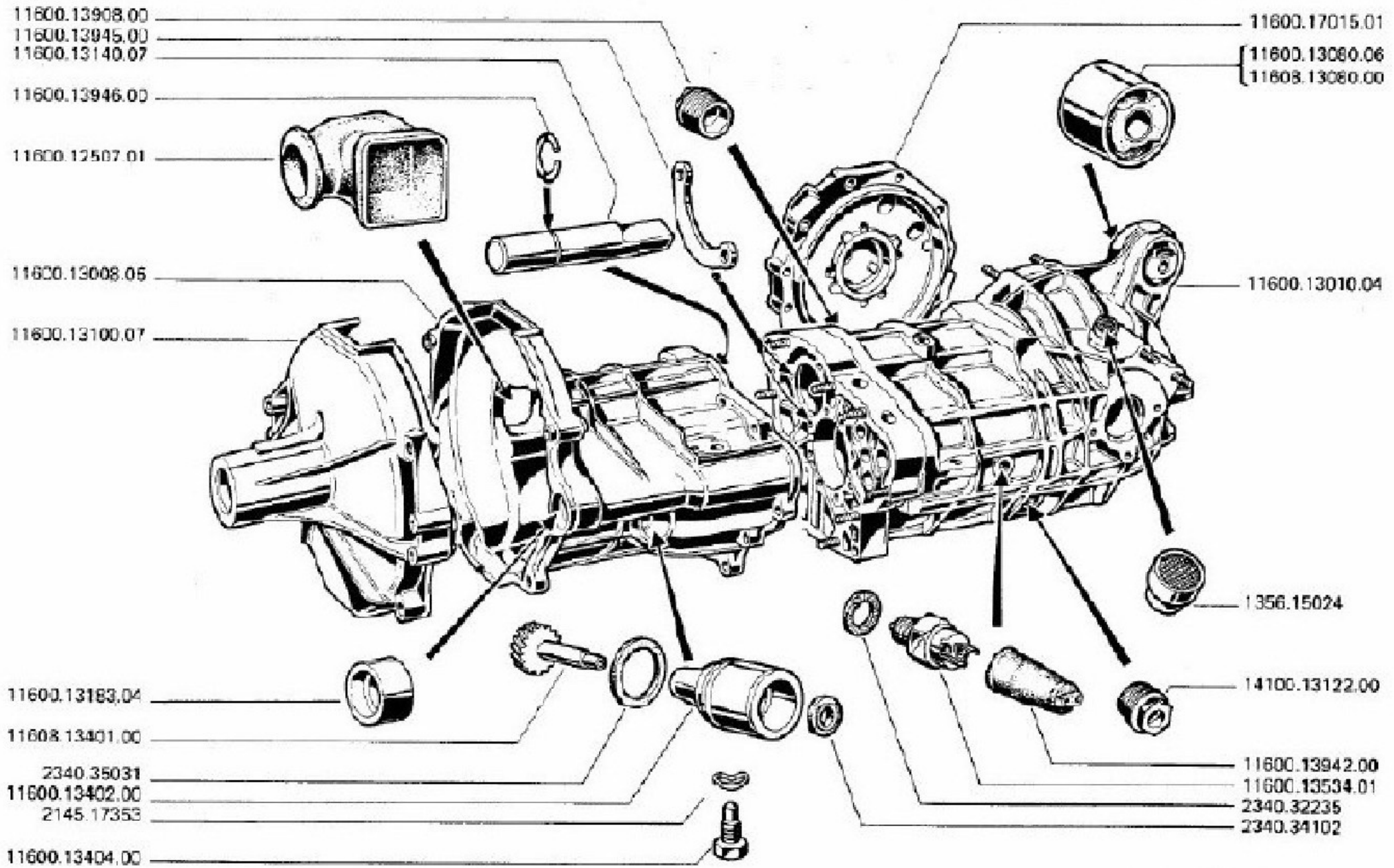

TAV. 12.00/0 CAMBIO E DIFFERENZIALE, SCATOLE E COPERCHI
BOITE ET DIFFERENTIEL, CARTERS ET COUVERCLES
TRANSMISSION-AND-DIFFERENTIAL UNIT CASING AND COVERS
WECHSEL-UND AUSGLEICHGETRIEBE, GEHAUSE UND DECKEL
CAMBIO Y DIFERENCIAL, CAJA Y TAPAS

MODIFICA	N. ORDINAZIONE		QT.	DENOMINAZIONE	DÉSIGNATION	DESCRIPTION	BENENNUNG	DENOMINACIONES
	1356.15024		1	TAPPO SFIATO	BOUCHON FILETE	THREAD PLUG	GEWINDESTOPFEN	TAPON ROSCADO
	2145.17353		1	RONDELLA	RONDELLE	WASHER	SCHEIBE	ARANDELLA
	2340.32235		1	GUARNIZIONE	JOINT D ETANCHEITE	SEAL	DICHTUNG	GUARNICION
	2340.34102		1	PARAOLIO	PARE-HUILE	OIL SEAL	OELDICHTRING	GUARNIC.RETENC.ACEIT
	2340.35031		1	ANELLO	BAGUE	RING	RING	ANILLO
	11600.12507.01		1	CAPPUCCIO	CAPUCHON PROTECTEUR	PROTECTIVE CAP	SCHUTZKAPPE	CASQUILLO PROTECTOR
	11600.13008.09		1	SCATOLA FRIZ.CAMBIO	CARTER BOITE VITESSE	TRANSMISSION CASE	GETRIEBEGEHAEUSE	CAJA DE CAMBIO
	11600.13010.04		1	SCATOLA CAMBIO PONTE	BOITIER DIFFERENTIEL	DIFFERENTIAL CASE	DIFFERENTIALGEHAUSE	CARTER DIFERENCIAL
	11600.13080.06	*	1	SILENTBLOC	SILENTBLOC	SILENTBLOCK	SILENTBLOCK	SILENTBLOC
	11600.13100.07		1	COPERCHIO FRIZIONE	COUVERCLE EMBRAYAGE	CLUTCH COVER	KUPPLUNGSDECKEL	TAPA DEL EMBRAGUE
	11600.13140.07		1	ALBERINO	AXE	SPINDLE	WELLE	EJE
	11600.13183.04		1	BOCCOLA	BAGUE	BUSHING	BUECHSE	CASQUILLO
	11600.13402.00		1	SUPPORTO	SUPPORT	SUPPORT	LAGERUNG	SOPORTE
	11600.13404.00		1	VITE	VIS	SCREW	SCHRAUBE	TORNILLO
	11600.13534.01		1	INTERRUTTORE R.M.	INTERRUPTEUR DE STOP	BRAKE SLOP SWITCH	BREMSLICHTSCHALTER	INTER.SENAL STOP
	11600.13908.00		1	TAPPO	BOUCHON FILETE	THREAD PLUG	GEWINDESTOPFEN	TAPON ROSCADO
	11600.13942.00		1	CAPPUCCIO	CAPUCHON PROTECTEUR	PROTECTIVE CAP	SCHUTZKAPPE	CASQUILLO PROTECTOR
	11600.13945.00		1	PIASTRINA	PLAQUETTE	PLATE	PLAETTCHEN	PLAQUITA
	11600.13946.00		1	ANELLO DI FERMO	ARRETOIR	LOCKRING	ANSCHLAG	TOPE
	11600.17015.01		1	COPERCHIO SUPPORTO	COUVERCLE DU CARTER	TRANSMISSION COVER	GETRIEBE DECKEL	TAPA DEL CAMBIO
	11608.13080.00	*	1	SILENTBLOC	SILENTBLOC	SILENTBLOCK	SILENTBLOCK	SILENTBLOC
	11608.13401.00		1	ALBERINO	AXE	SPINDLE	WELLE	EJE
	14100.13122.00		1	TAPPO MAGNETICO	BOUCHON DE VIDANGE	DRAIN PLUG	ABLASSTOPFEN	TAPON DE VACIADO

* ALTERNATIVA ALTERNATIVE ALTERNATIVE WAHLWEISE ALTERNATIVA

BULLONERIA DEL CAMBIO DI VELOCITA'
BOULONNERIE DE BOITE DE VITESSES
GEARBOX HARDWARE
SCHRAUBEN U. MUTTERN F. WECHSELGETRIEBE
BULONERIA DEL CAMBIO DE VELOCIDADES

TAV. 12.02

1ª	EDIZIONE	1974	APRILE	DATA ULTIMO AGGIORNAMENTO
1ère	EDITION		AVRIL	
1st	EDITION		APRIL	
1.	AUSGABE		APRIL	
1ª	EDICION		ABRIL	

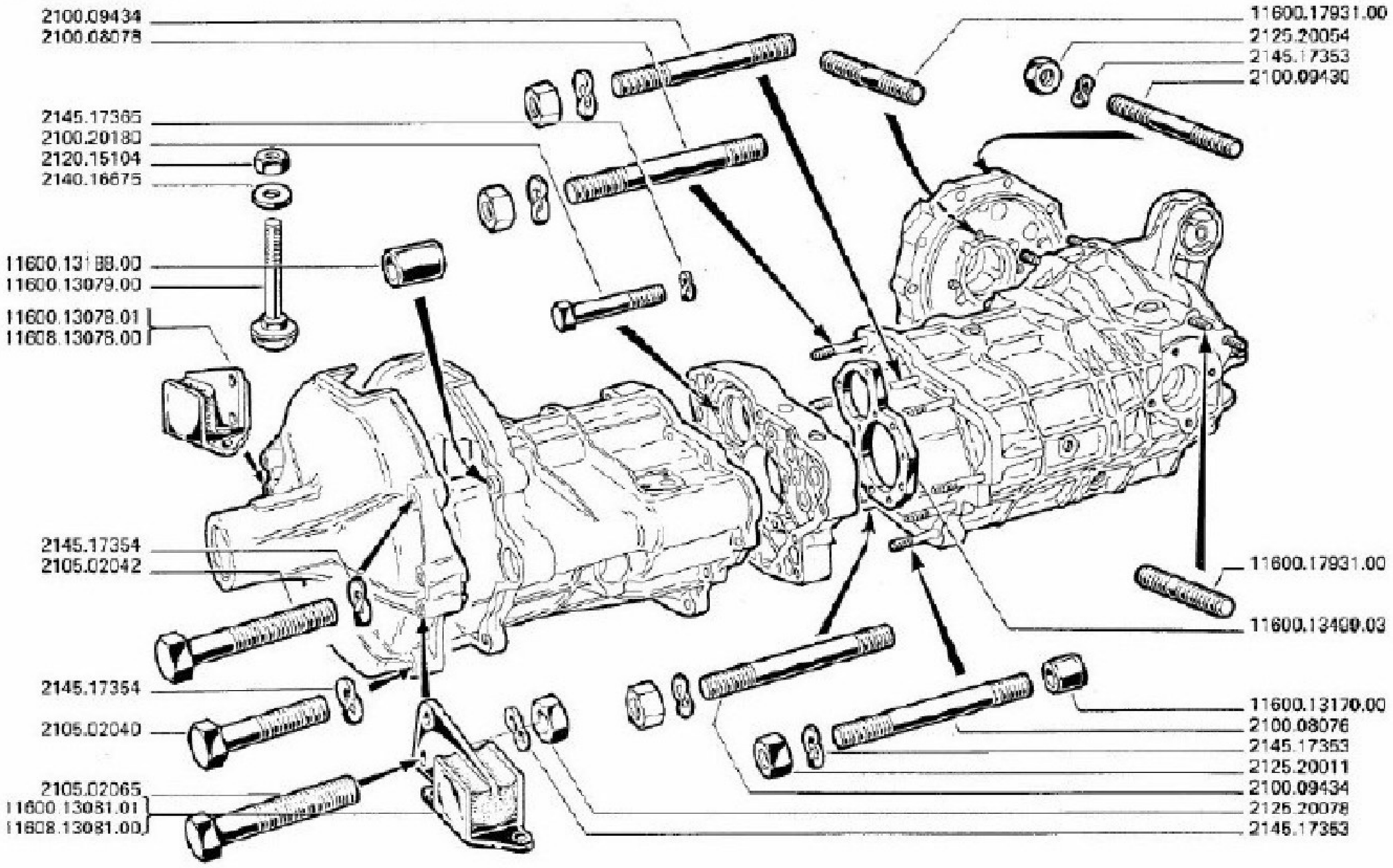

TAV. 12.02/0

BULLONERIA DEL CAMBIO DI VELOCITA
BOULONNERIE DE BOITE DE VITESSES
GEARBOX HARDWARE
SCHRAUBEN U. MUTTERN F. WECHSELGETRIEBE
BULONERIA DEL CAMBIO DE VELOCIDADES

MODIFICA	N. ORDINAZIONE	QT.	DENOMINAZIONE	DÉSIGNATION	DESCRIPTION	BENENNUNG	DENOMINACIONES
	2100.08076	1	PRIGIONIERO	GOUJON	STUD	STIFTSCHRAUBE	PRISIONERO
	2100.08078	1	PRIGIONIERO	GOUJON	STUD	STIFTSCHRAUBE	PRISIONERO
	2100.09430	12	PRIGIONIERO	GOUJON	STUD	STIFTSCHRAUBE	PRISIONERO
	2100.09434	7	PRIGIONIERO	GOUJON	STUD	STIFTSCHRAUBE	PRISIONERO
	2100.20180	10	VITE	VIS	SCREW	SCHRAUBE	TORNILLO
	2105.02040	2	VITE	VIS	SCREW	SCHRAUBE	TORNILLO
	2105.02042	2	VITE	VIS	SCREW	SCHRAUBE	TORNILLO
	2105.02065	3	VITE	VIS	SCREW	SCHRAUBE	TORNILLO
	2120.15104	1	DADO	ECROU	NUT	MUTTER	TUERCA
	2125.20011	9	DADO	ECROU	NUT	MUTTER	TUERCA
	2125.20054	12	DADO	ECROU	NUT	MUTTER	TUERCA
	2125.20078	3	DADO	ECROU	NUT	MUTTER	TUERCA
	2140.16675	1	RONDELLA	RONDELLE	WASHER	SCHEIBE	ARANDELLA
	2145.17353	24	RONDELLA	RONDELLE	WASHER	SCHEIBE	ARANDELLA
	2145.17354	4	RONDELLA	RONDELLE	WASHER	SCHEIBE	ARANDELLA
	2145.17365	10	RONDELLA	RONDELLE	WASHER	SCHEIBE	ARANDELLA
	11600.13078.01	* 1	TASSELLO ELASTICO D.	TAMPON	BUFFER	ZWISCHENSTUECK	TOPE
	11600.13079.00	1	TAMPONE	BUTOIR PARE-CHOC	BUFFER STOP	PUFFER	CONTRATOPE
	11600.13081.01	* 1	TASSELLO ELASTICO S.	TAMPON	BUFFER	ZWISCHENSTUECK	TOPE
	11600.13170.00	4	BUSSOLA	BAGUE	BUSHING	HUELSE	BUJE
	11600.13188.00	2	GRANO	BOULON DE CENTRAGE	DOWEL BOLT	ZENTRIERSTIFT	PERNO DE CENTRAJE

BULLONERIA DEL CAMBIO DI VELOCITA'
BOULONNERIE DE BOITE DE VITESSES
GEARBOX HARDWARE
SCHRAUBEN U. MUTTERN F. WECHSELGETRIEBE
BULONERIA DEL CAMBIO DE VELOCIDADES

TAV. 12.02

1 EDIZIONE / EDITION / EDITION / AUSGABE / EDICION 1974 APRILE / AVRIL / APRIL / APRIL / ABRIL

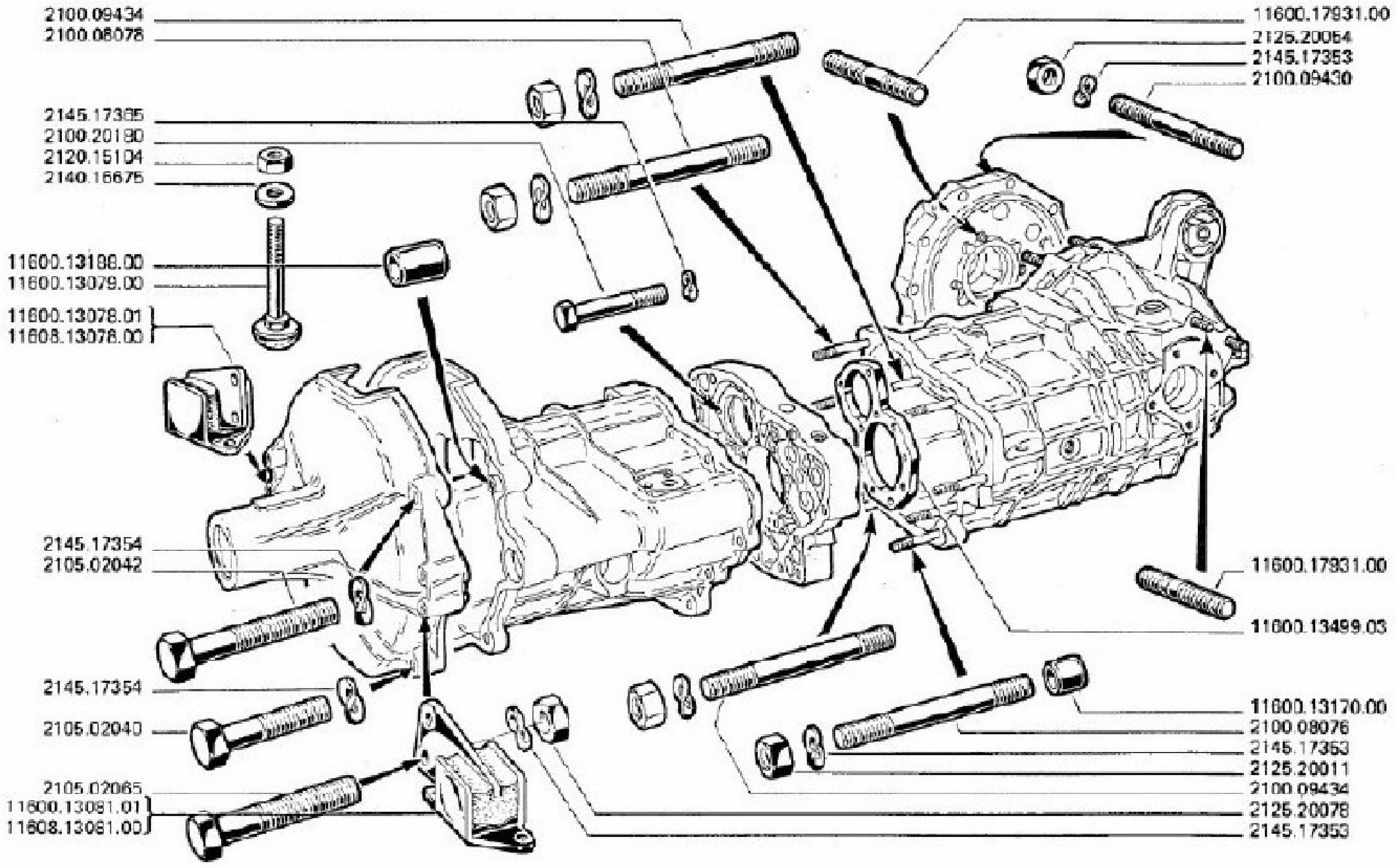

Alfetta GT

TAV. 12.02/0

BULLONERIA DEL CAMBIO DI VELOCITA
BOULONNERIE DE BOITE DE VITESSES
GEARBOX HARDWARE
SCHRAUBEN U. MUTTERN F. WECHSELGETRIEBE
BULONERIA DEL CAMBIO DE VELOCIDADES

MODIFICA	N. ORDINAZIONE		QT.	DENOMINAZIONE	DÉSIGNATION	DESCRIPTION	BENENNUNG	DENOMINACIONES
	11600.13499.03		1	PIASTRA	SUPPORT DE PALIER	BEARING BRACKET	LAGERSTUETZE	SOPORTE COJINETE
	11600.17931.00		4	PRIGIONIERO	GOUJON	STUD	STIFTSCHRAUBE	PRISIONERO
	11608.13078.00	*	1	TASSELLO ELASTICO D.	TAMPON	BUFFER	ZWISCHENSTUECK	TOPE
	11608.13081.00	*	1	TASSELLO ELASTICO S.	TAMPON	BUFFER	ZWISCHENSTUECK	TOPE

* ALTERNATIVA ALTERNATIVE ALTERNATIVE WAHLWEISE ALTERNATIVA

ALBERO PRIMARIO
ARBRE PRIMAIRE
MAINSHAFT
HAUPTWELLE
EJE PRIMARIO

TAV. 12.12

1a	EDIZIONE	1974	APRILE
1re	EDITION		AVRIL
1st	EDITION		APRIL
1.	AUSGABE		APRIL
1a	EDICION		APRIL

DATA DI STAMPA / DATE D'IMPRESSION / DATE OF PRINTING / DRUCKDATUM / FECHA DE IMPRESION

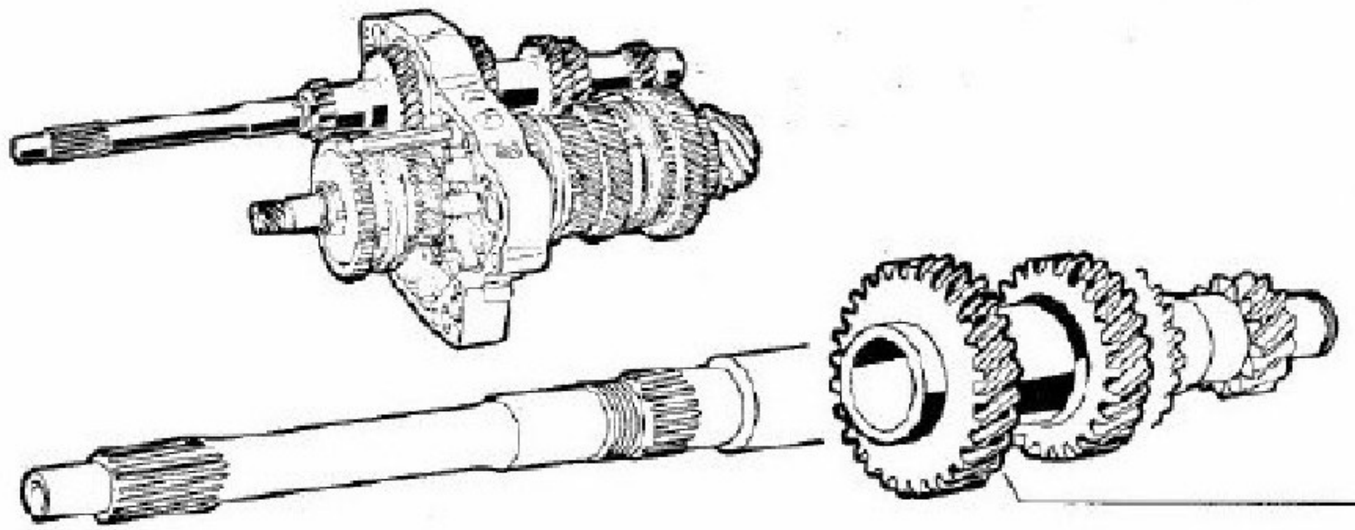

TAV. 12.12/0

ALBERO PRIMARIO
ARBRE PRIMAIRE
MAINSHAFT
HAUPTWELLE
EJE PRIMARIO

NOTIFICA	N. ORDINAZIONE		QT.	DENOMINAZIONE	DÉSIGNATION	DESCRIPTION	BENENNUNG	DENOMINACIONES
	11600.13028.04		1	ALBERO PRIMARIO	ARBRE PRIMAIRE	MAINSHAFT	HAUPTWELLE	EJE PRIMARIO
	11600.13206.02		1	INGRANAGGIO 3A-4A	PIGNON ARBRE PRINAIR	INLET SHAFT ASSY	VORGELEGERAD ANTRIEB	PINON PRIN.ENGR.CONS
	11600.13224.01	*	1	CUSCINETTO	ROULEMENT AIGUILLES	NEEDLE BEARING	NADELLAGER	COJINETE DE AGUJAS
	11600.13224.02	*	1	CUSCINETTO	ROULEMENT AIGUILLES	NEEDLE BEARING	NADELLAGER	COJINETE DE AGUJAS
	11600.13224.03	*	1	CUSCINETTO	ROULEMENT AIGUILLES	NEEDLE BEARING	NADELLAGER	COJINETE DE AGUJAS
	11600.13247.00	*	1	CUSCINETTO	JOINT METALLIQUE	METAL GASKET	METALLGELENK	JUNTA METALICA
	11600.13247.02	*	1	CUSCINETTO	JOINT METALLIQUE	METAL GASKET	METALLGELENK	JUNTA METALICA
	11600.13301.15		1	INGRANAGGIO 5A-RM	PIGNON ARBRE PRINAIR	INLET SHAFT ASSY	VORGELEGERAD ANTRIEB	PINON PRIN.ENGR.CONS
	11600.13420.02		1	RONDELLA	RONDELLE	WASHER	SCHEIBE	ARANDELLA
	11600.13421.01		1	RONDELLA	RONDELLE	WASHER	SCHEIBE	ARANDELLA
	11600.13498.00	*	1	ANELLO TENUTA	JOINT	SEAL	DICHTRING	JUNTA
	11600.13498.02	*	1	ANELLO TENUTA	JOINT	SEAL	DICHTRING	JUNTA
	11600.13586.05		1	DADO	ECROU	NUT	MUTTER	TUERCA
	11600.13589.01		1	ANELLO ELASTICO	JONC DE RETENUE	RETAINER RING	SPRENGRING	ANILLO ELASTICO
	11600.13594.02	*	1	BOCCOLA	BAGUE	BUSHING	BUECHSE	CASQUILLO
	11600.13594.03	*	1	BOCCOLA	BAGUE	BUSHING	BUECHSE	CASQUILLO

* ALTERNATIVA ALTERNATIVE ALTERNATIVE WAHLWEISE ALTERNATIVA

RUOTISMI ALBERO SECONDARIO
PIGNONNERIE ARBRE SECONDAIRE
LAYSHAFT GEARS
RADSATZ DER VORGELEGEWELLE
JUEGO ENGRANAJES EJE SECUNDARIO

TAV. 12.16

1 EDIZIONE / EDITION / EDITION / AUSGABE / EDICION 1974 APRILE / AVRIL / APRIL / APRIL / ABRIL

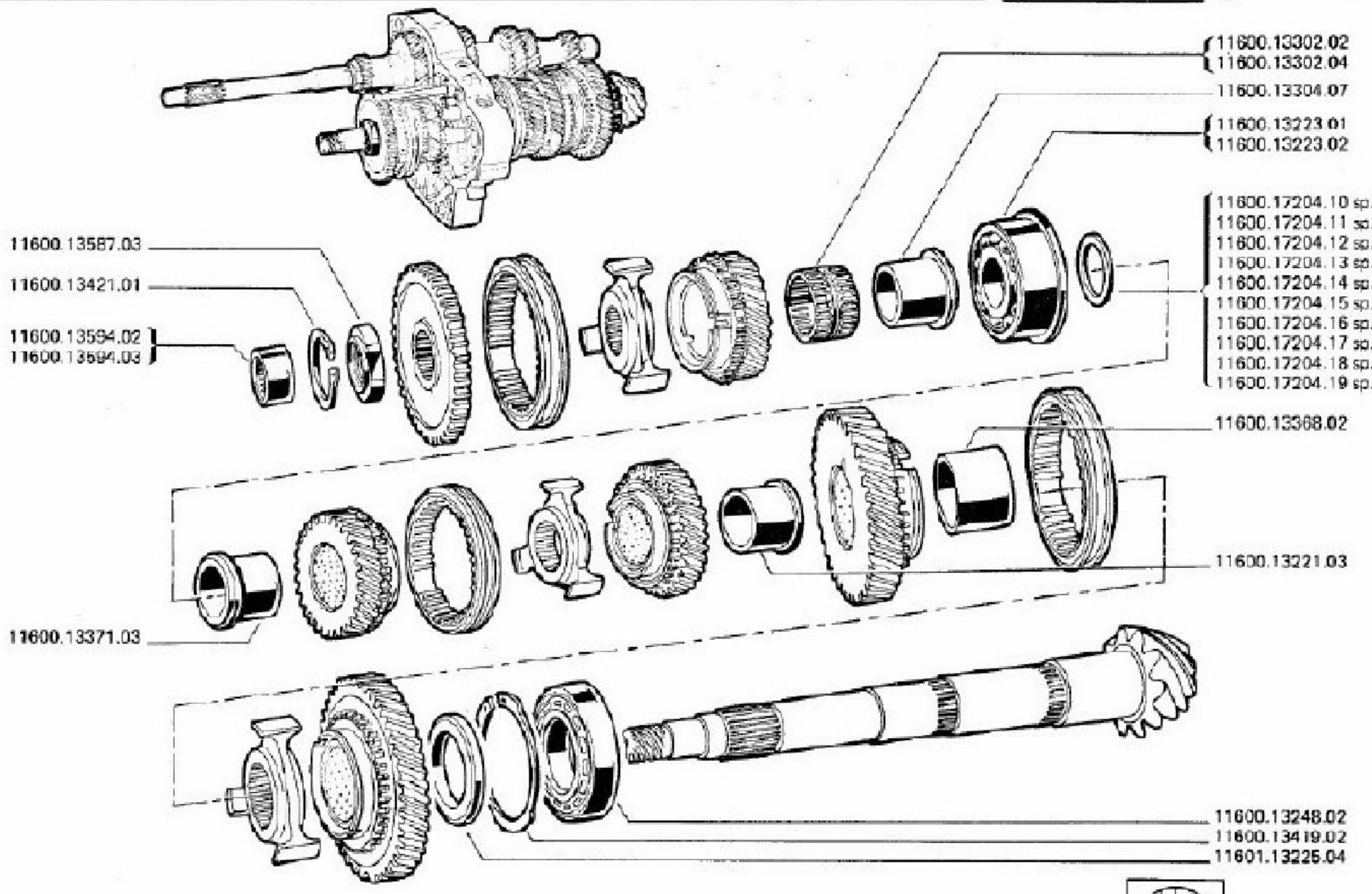

TAV. 12.1670

RUOTISMI ALBERO SECONDARIO
PIGNONNERIE ARBRE SECONDAIRE
LAYSHAFT GEARS
RADSATZ DER VORGELEGEWELLE
JUEGO ENGRANAJES EJE SECUNDARIO

MODIFICA	N. ORDINAZIONE		QT.	DENOMINAZIONE	DESIGNATION	DESCRIPTION	BENENNUNG	DENOMINACIONES
	11600.13221.03		1	DISTANZIALE 3A	ENTRETOISE	SPACER	ABSTANDSTUECK	SEPARADOR
	11600.13223.01	*	1	CUSCINETTO	ROULEMENT	BEARING	LAGER	COJINETE
	11600.13223.02	*	1	CUSCINETTO	ROULEMENT	BEARING	LAGER	COJINETE
	11600.13248.02		1	CUSCINETTO	ROULEMENT	BEARING	LAGER	COJINETE
	11600.13302.02	*	1	GABBIA A RULLINI	CAGE A AIGUILLES	GAGED ROLLER	ROLLENLAGERKAFIG	JAULA CON RODILLOS
	11600.13302.04	*	1	GABBIA A RULLINI	CAGE A AIGUILLES	GAGED ROLLER	ROLLENLAGERKAFIG	JAULA CON RODILLOS
	11600.13304.07		1	DISTANZIALE 5A	ENTRETOISE	SPACER	ABSTANDSTUECK	SEPARADOR
	11600.13368.02		1	DISTANZIALE 2A	ENTRETOISE	SPACER	ABSTANDSTUECK	SEPARADOR
	11600.13371.03		1	DISTANZIALE 4A	ENTRETOISE	SPACER	ABSTANDSTUECK	SEPARADOR
	11600.13419.02		1	ANELLO SPALLAMENTO	BAGUE	RING	RING	ANILLO
	11600.13421.01		1	ANELLO SPALLAMENTO	RONDELLE	WASHER	SCHEIBE	ARANDELLA
	11600.13587.03		1	DADO	ECROU	NUT	MUTTER	TUERCA
	11600.13594.02	*	1	BOCCOLA	BAGUE	BUSHING	BUECHSE	CASQUILLO
	11600.13594.03	*	1	BOCCOLA	BAGUE	BUSHING	BUECHSE	CASQUILLO
	11600.17204.10		0	RASAMENTO SP. 0,08	BAGUE	SHIM	AUSGLEICH	ALISAMENTO
	11600.17204.11		0	RASAMENTO SP. 1,60	BAGUE	SHIM	AUSGLEICH	ALISAMENTO
	11600.17204.12		0	RASAMENTO SP. 1,65	BAGUE	SHIM	AUSGLEICH	ALISAMENTO
	11600.17204.13		0	RASAMENTO SP. 1,70	BAGUE	SHIM	AUSGLEICH	ALISAMENTO
	11600.17204.14		0	RASAMENTO SP. 1,75	BAGUE	SHIM	AUSGLEICH	ALISAMENTO
	11600.17204.15		0	RASAMENTO SP. 1,80	BAGUE	SHIM	AUSGLEICH	ALISAMENTO
	11600.17204.16		0	RASAMENTO SP. 1,85	BAGUE	SHIM	AUSGLEICH	ALISAMENTO

RUOTISMI ALBERO SECONDARIO
PIGNONNERIE ARBRE SECONDAIRE
LAYSHAFT GEARS
RADSATZ DER VORGELEGEWELLE
JUEGO ENGRANAJES EJE SECUNDARIO

TAV. 12.16

1ª	EDIZIONE	1974	APRILE
1st	EDITION		AVRIL
1st	EDITION		APRIL
	AUSGABE		APRIL
1ª	EDICION		ABRIL

DATA ULTIMO AGGIORNAMENTO

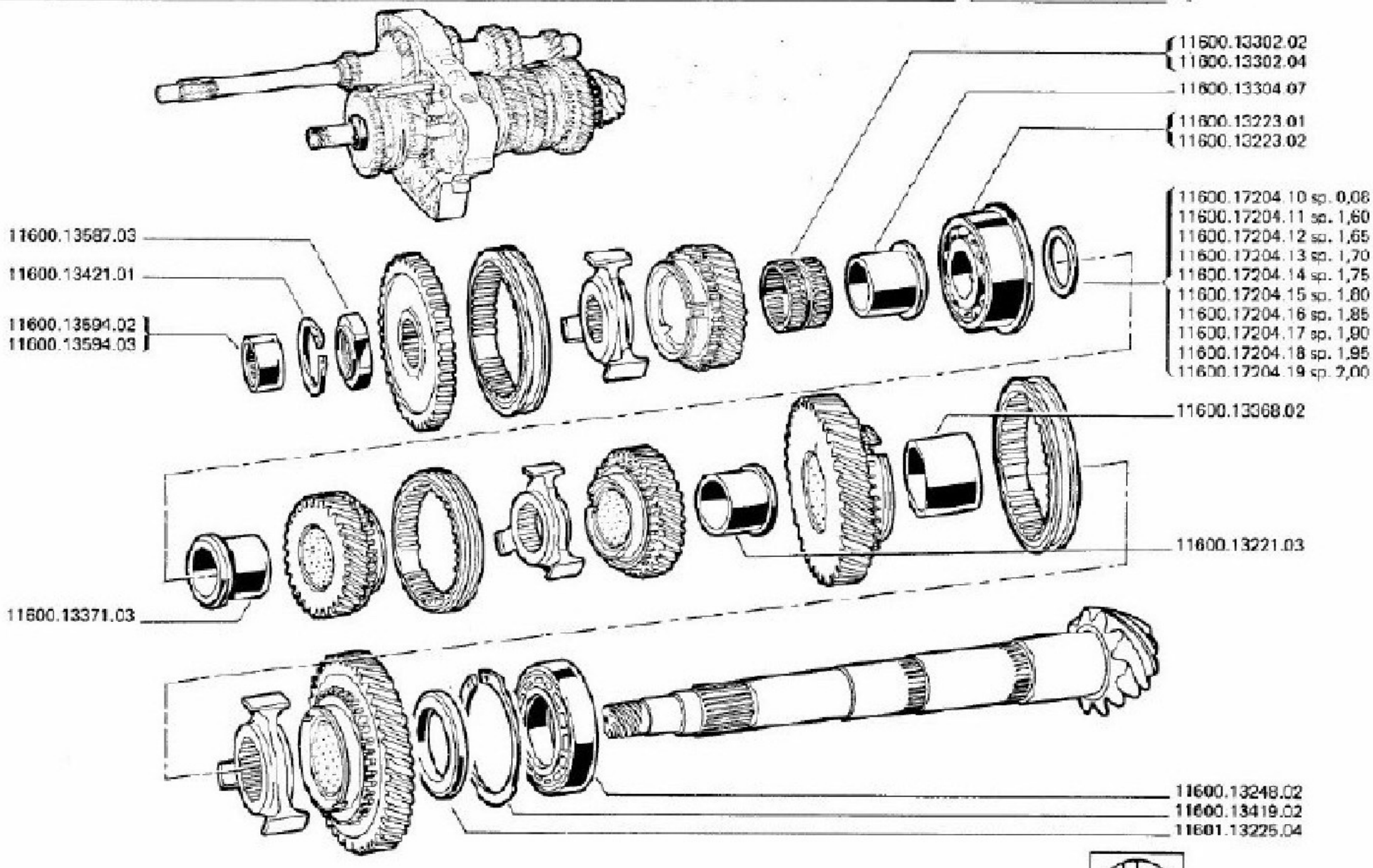

TAV. 12.16/0

RUOTISMI ALBERO SECONDARIO
PIGNONNERIE ARBRE SECONDAIRE
LAYSHAFT GEARS
RADSATZ DER VORGELEGEWELLE
JUEGO ENGRANAJES EJE SECUNDARIO

MODIFICA	N. ORDINAZIONE	Qt.	DENOMINAZIONE	DÉSIGNATION	DESCRIPTION	BENENNUNG	DENOMINACIONES
	11600.17204.17	0	RASAMENTO SP. 1,90	BAGUE	SHIM	AUSGLEICH	ALISAMENTO
	11600.17204.18	0	RASAMENTO SP. 1,95	BAGUE	SHIM	AUSGLEICH	ALISAMENTO
	11600.17204.19	0	RASAMENTO SP. 2,00	BAGUE	SHIM	AUSGLEICH	ALISAMENTO
	11601.13225.04	1	DISTANZIALE 1A	ENTRETOISE	SPACER	ABSTANDSTUECK	SEPARADOR

* ALTERNATIVA ALTERNATIVE ALTERNATIVE WAHLWEISE ALTERNATIVA

RUOTISMI ALBERO SECONDARIO
PIGNONNERIE ARBRE SECONDAIRE
LAYSHAFT GEARS
RADSATZ DER VORGELEGEWELLE
JUEGO ENGRANAJES EJE SECUNDARIO

TAV. 12.16/1

1ª	EDIZIONE	APRILE	1974	AGGIORNAMENTO
1re	EDITION	AVRIL		
1st	EDITION	APRIL		
1.	AUSGABE	APRIL		
1ra	EDICION	ABRIL		

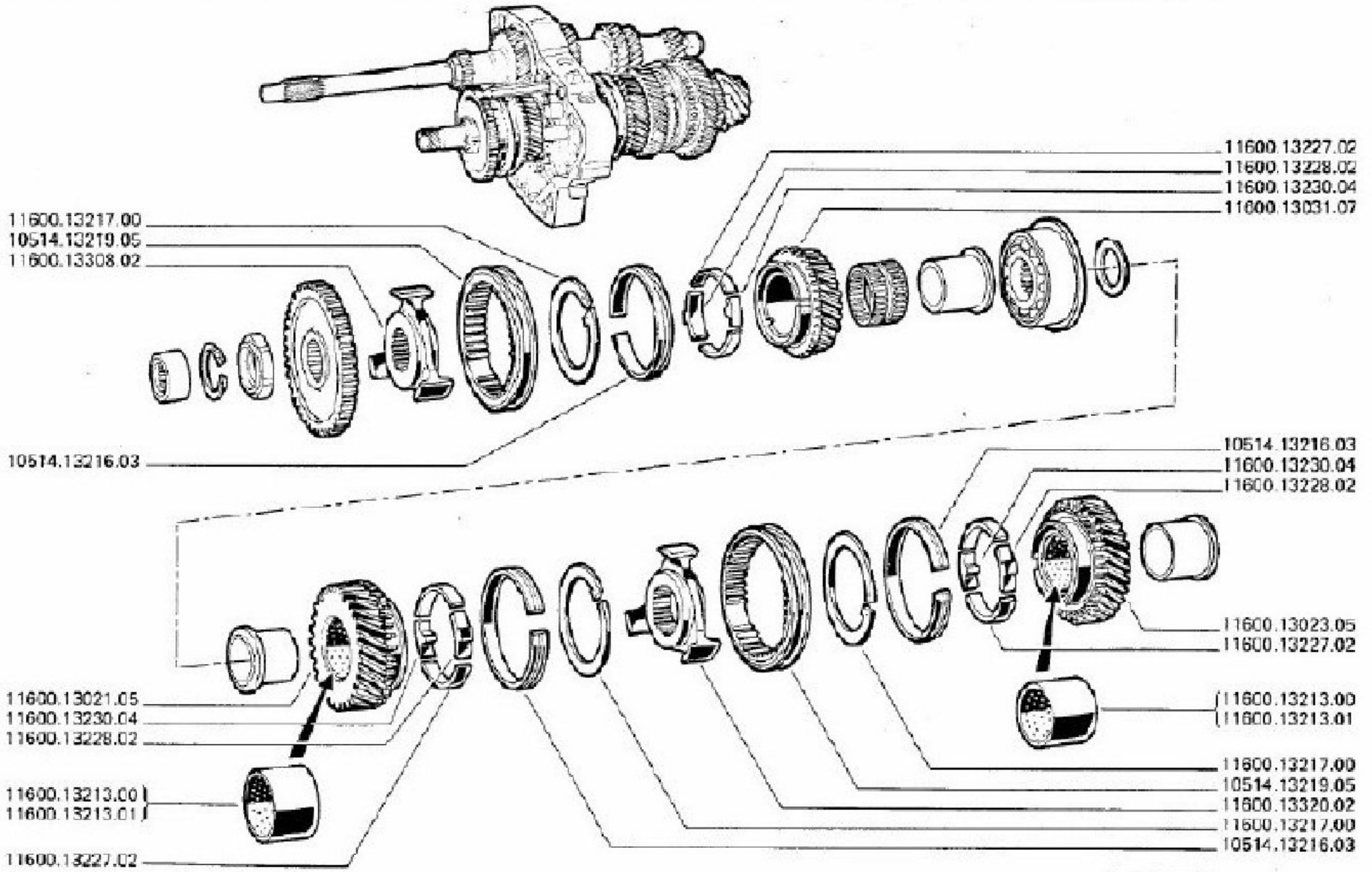

N. 6449

Alfetta GT

TAV. 12.16/1

RUOTISMI ALBERO SECONDARIO
PIGNONNERIE ARBRE SECONDAIRE
LAYSHAFT GEARS
RADSATZ DER VORGELEGEWELLE
JUEGO ENGRANAJES EJE SECUNDARIO

MODIFICA	N. ORDINAZIONE	QT.	DENOMINAZIONE	DESIGNATION	DESCRIPTION	BENENNUNG	DENOMINACIONES
	10514.13216.03	3	ANELLO SINCRONIZZ.	ANNEAU SYNCHRONISAT.	SYNCHRONIZING RING	SYNCHRONRING	ANILLO SINCRONIZACIO
	10514.13219.05	2	MANICOTTO	BALADEUR	SLEEVE	SCHALTMUFFE	MANGUITO
	11600.13021.05	1	INGRANAGGIO 4A	PIGNON	GEAR	ZAHNRAD	ENGRANAJE
	11600.13023.05	1	INGRANAGGIO 3A	PIGNON	GEAR	ZAHNRAD	ENGRANAJE
	11600.13031.07	1	INGRANAGGIO 5A	PIGNON	GEAR	ZAHNRAD	ENGRANAJE
	11600.13213.00 *	2	BOCCOLA	BAGUE	BUSHING	BUECHSE	CASQUILLO
	11600.13213.01 *	2	BOCCOLA	BAGUE	BUSHING	BUECHSE	CASQUILLO
	11600.13217.00	3	ANELLO SICUREZZA	ARRETOIR	LOCKRING	SICHERUNGSRING	ANILLO DE FRENO
	11600.13227.02	6	NASTRO	SANGLE	STRAP	BAND	BANDA
	11600.13228.02	3	SETTORE ARRESTO	SECTEUR DENTE ARRET	KNOTCHED LOCKING QUA	FESTSTELLSEGMENT	SECTOR DE MANIOBRA
	11600.13230.04	3	SETTORE RIFERIMENTO	SECTEUR	QUADRANT	SPERRSTEIN	SECTOR
	11600.13308.02	1	MOZZO 5A	MOYEU	HUB	NABE	CUBO
	11600.13320.02	1	MOZZO 3A-4A	MOYEU	HUB	NABE	CUBO

* ALTERNATIVA ALTERNATIVE ALTERNATIVE WAHLWEISE ALTERNATIVA

RUOTISMI **ALBERO SECONDARIO**
PIGNONNERIE ARBRE SECONDAIRE
LAYSHAFT GEARS
RADSATZ DER VORGELEGEWELLE
JUEGO ENGRANAJES EJE SECUNDARIO

TAV. 12.16/2

1ª	EDIZIONE	1974	APRILE
1re	EDITION		AVRIL
1st	EDITION		APRIL
1.	AUSGABE		APRIL
1ra	EDICION		APRIL

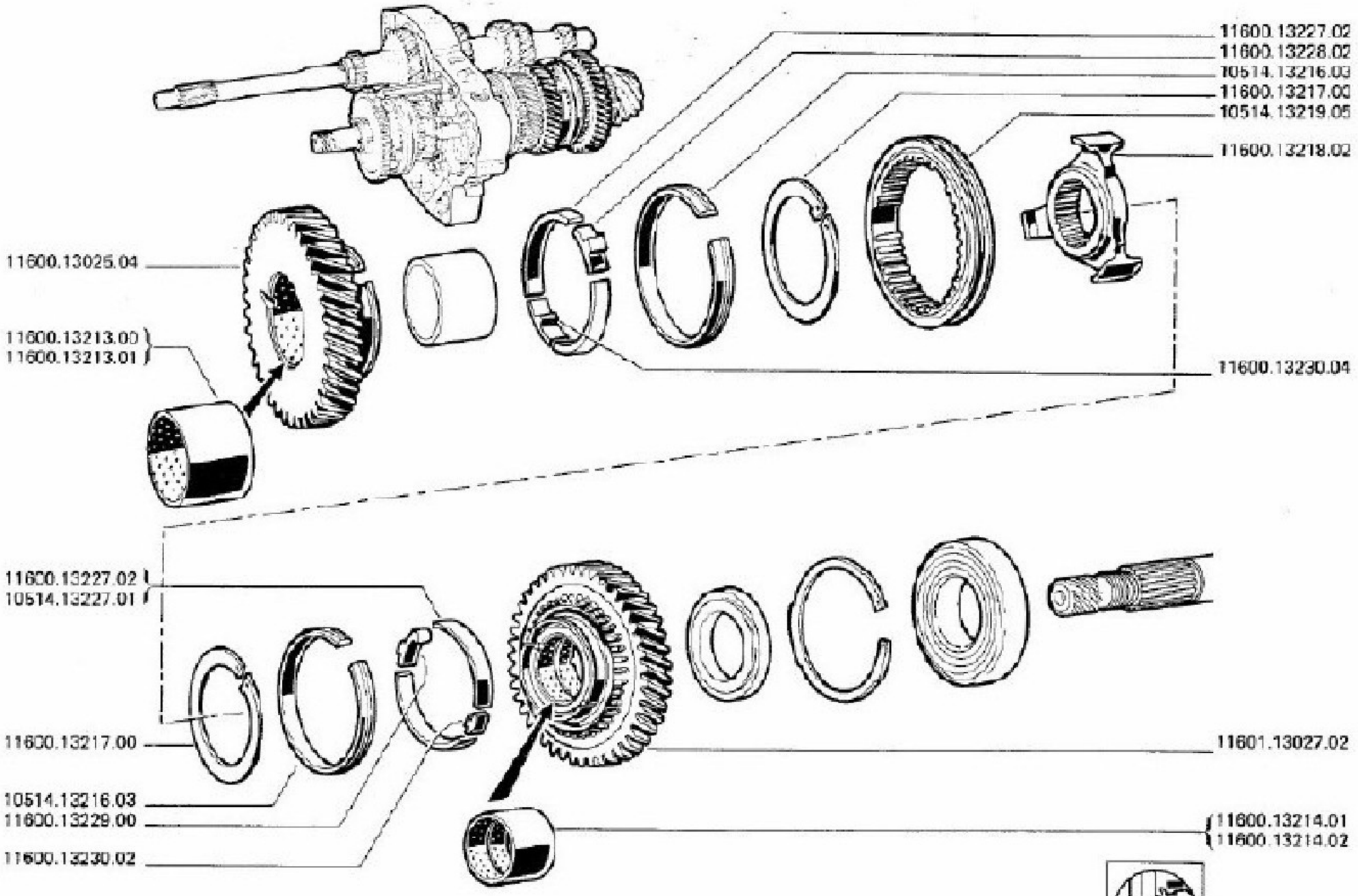

TAV. 12.16/2

RUOTISMI ALBERO SECONDARIO
PIGNONNERIE ARBRE SECONDAIRE
LAYSHAFT GEARS
RADSATZ DER VORGELEGEWELLE
JUEGO ENGRANAJES EJE SECUNDARIO

MODIFICA	N. ORDINAZIONE		QT.	DENOMINAZIONE	DESIGNATION	DESCRIPTION	BENENNUNG	DENOMINACIONES
	10514.13216.03		2	ANELLO SINCRONIZZ.	ANNEAU SYNCHRONISAT.	SYNCHRONIZING RING	SYNCHRONRING	ANILLO SINCRONIZACIO
	10514.13219.05		1	MANICOTTO	BALADEUR	SLEEVE	SCHALTMUFFE	MANGUITO
	10514.13227.01		1	NASTRO	SANGLE	STRAP	BAND	BANDA
	11600.13025.04		1	INGRANAGGIO 2A	PIGNON	GEAR	ZAHNRAD	ENGRANAJE
	11600.13213.00	*	1	BOCCOLA INGR. 2A	BAGUE	BUSHING	BUECHSE	CASQUILLO
	11600.13213.01	*	1	BOCCOLA INGR. 2A	BAGUE	BUSHING	BUECHSE	CASQUILLO
	11600.13214.01	*	1	BOCCOLA INGR. 1A	BAGUE	BUSHING	BUECHSE	CASQUILLO
	11600.13214.02	*	1	BOCCOLA INGR. 1A	BAGUE	BUSHING	BUECHSE	CASQUILLO
	11600.13217.00		2	ANELLO SICUREZZA	ARRETOIR	LOCKRING	SICHERUNGSRING	ANILLO DE FRENO
	11600.13218.02		1	MOZZO 1A-2A	MOYEU	HUB	NABE	CUBO
	11600.13227.02		3	NASTRO	SANGLE	STRAP	BAND	BANDA
	11600.13228.02		1	SETTORE ARRESTO 2A	SECTEUR DENTE ARRET	KNOTCHED LOCKING QUA	FESTSTELLSEGMENT	SECTOR DE MANIOBRA
	11600.13229.00		1	SETTORE ARRESTO 1A	SECTEUR DENTE ARRET	KNOTCHED LOCKING QUA	FESTSTELLSEGMENT	SECTOR DE MANIOBRA
	11600.13230.02		1	SETTORE RIFERIMENTO	SECTEUR	QUADRANT	SPERRSTEIN	SECTOR
	11600.13230.04		1	SETTORE RIFERIMENTO	SECTEUR	QUADRANT	SPERRSTEIN	SECTOR
	11601.13027.02		1	INGRANAGGIO 1A	PIGNON	GEAR	ZAHNRAD	ENGRANAJE

* ALTERNATIVA ALTERNATIVE ALTERNATIVE WAHLWEISE ALTERNATIVA

RUOTISMI R.M.
PIGNONNERIE DE MARCHE ARRIERE
REVERSE GEARS
RADSATZ DES RÜCKWÄRTSGANGES
JUEGO ENGRANAJES MARCHA ATRAS

TAV. 12.17

1°	EDIZIONE	APRILE	1974
1ère	EDITION	AVRIL	
1st	EDITION	APRIL	
1.	AUSGABE	APRIL	
1ª	EDICION	ABRIL	

DATA DI INIZIO UTILIZZAZIONE

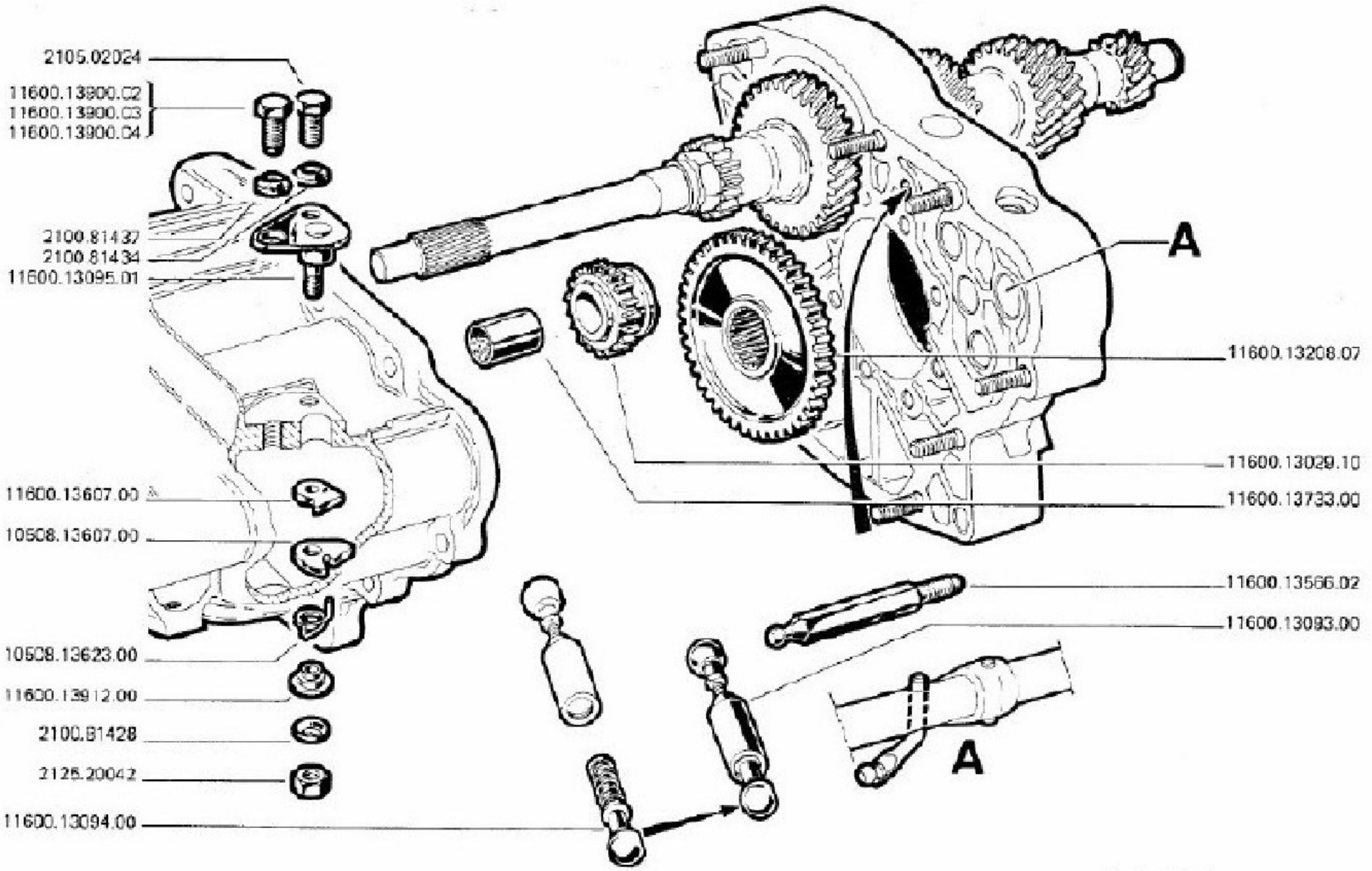

N. 6431

Alfetta GT

TAV. 12.17/0

ROUTISMI R.M.
PIGNONNERIE DE MARCHE ARRIERE
REVERSE GEARS
RADSATZ DES RUCKWARTSGANGES
JUEGO ENGRANAJES MARCHA ATRAS

MODIFICA	N. ORDINAZIONE	QT.	DENOMINAZIONE	DESIGNATION	DESCRIPTION	BENENNUNG	DENOMINACIONES
	2100.81428	1	RONDELLA	RONDELLE	WASHER	SCHEIBE	ARANDELLA
	2100.81434	1	RONDELLA	RONDELLE	WASHER	SCHEIBE	ARANDELLA
	2100.81437	1	RONDELLA	RONDELLE	WASHER	SCHEIBE	ARANDELLA
	2105.02024	1	VITE	VIS	SCREW	SCHRAUBE	TORNILLO
	2125.20042	1	DADO	ECROU	NUT	MUTTER	TUERCA
	10508.13607.00	1	LEVA	LEVIER	LEVER	HEBEL	PALANCA
	10508.13623.00	1	MOLLA	RESSORT	SPRING	FEDER	MUELLE
	11600.13029.10	1	INGR. SCORREVOLE	PIGNON BALADEUR	SLIDING GEAR	SCHIEBERAD	CORREDIZO
	11600.13093.00	1	TIRANTE ELASTICO	BIELLETTE	ROD	ZUGSTANGE	TIRANTE
	11600.13094.00	1	PERNO COMPL.	AXE	PIVOT PIN	ZAPFEN	PERNO
	11600.13095.01	1	SUPPORTO	SUPPORT	SUPPORT	LAGERUNG	SOPORTE
	11600.13208.07	1	INGRANAGGIO RM	PIGNON	GEAR	ZAHNRAD	ENGRANAJE
	11600.13566.02	1	TIRANTE	BIELLETTE	ROD	ZUGSTANGE	TIRANTE
	11600.13607.00	1	LEVA	LEVIER	LEVER	HEBEL	PALANCA
	11600.13733.00	1	BOCCOLA	BAGUE	BUSHING	BUECHSE	CASQUILLO
	11600.13900.03	* 1	VITE	VIS	SCREW	SCHRAUBE	TORNILLO
	11600.13900.04	* 1	VITE	VIS	SCREW	SCHRAUBE	TORNILLO
	11600.13912.00	1	PERNO	AXE	PIVOT PIN	ZAPFEN	PERNO

* ALTERNATIVA ALTERNATIVE ALTERNATIVE WAHLWEISE ALTERNATIVA

COMANDI INTERNI DEL CAMBIO
COMMANDE INTERIEURE DE BOITE DE VITESSES
GEARBOX INTERNAL CONTROL
INNERE GETRIEBESCHALTUNG
MANDOS INTERNOS DEL CAMBIO

TAV. 12.20

1	EDIZIONE	1974	APRILE
	EDITION		AVRIL
	EDITION		APRIL
	AUSGABE		APRIL
	EDICION		ABRIL

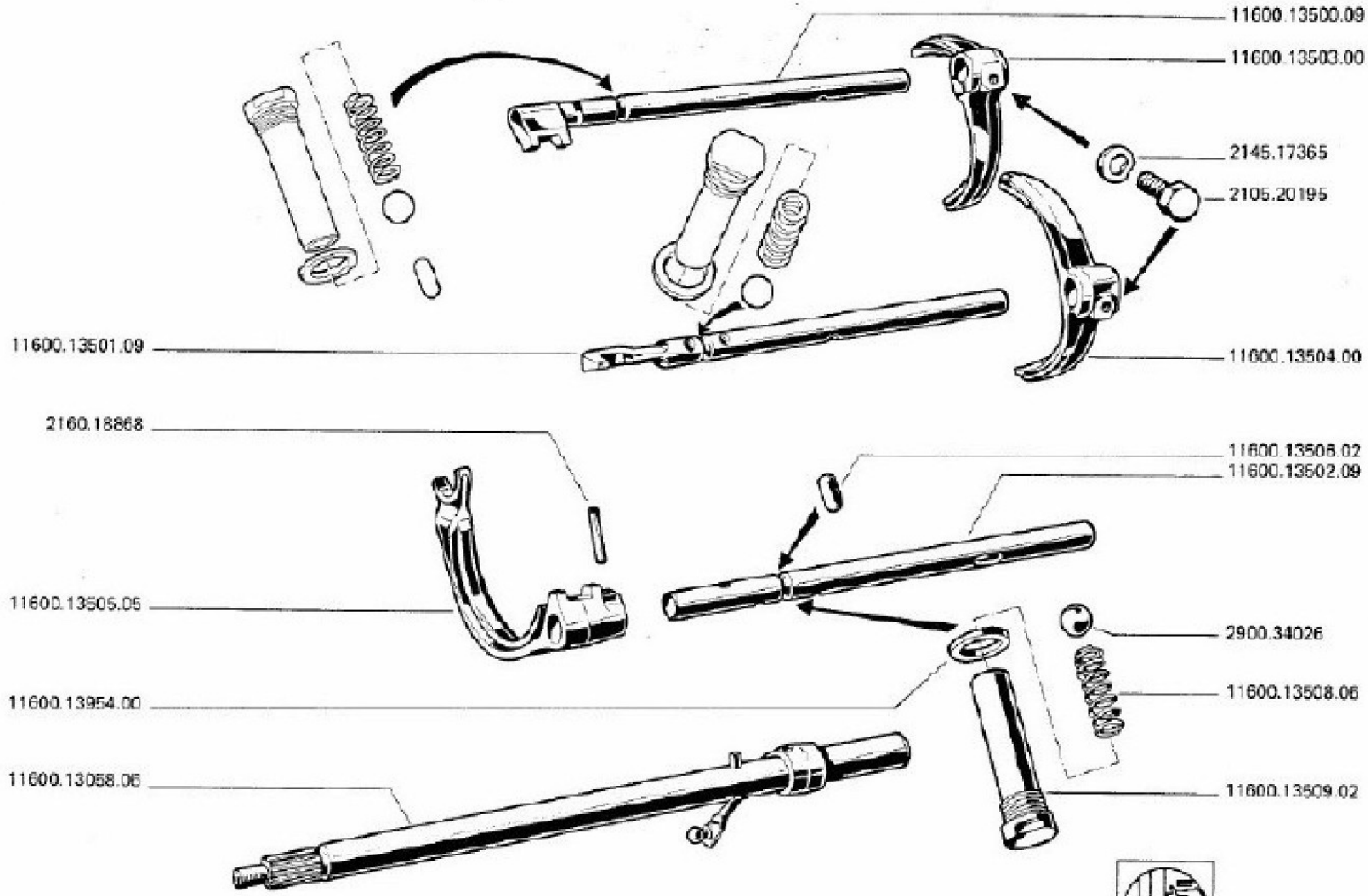

N. 6448

Alfetta GT

TAV. 12.2070

COMANDI INTERNI DEL CAMBIO
COMMANDE INTERIEURE DE BOITE DE VITESSES
GEARBOX INTERNAL CONTROL
INNERE GETRIEBESCHALTUNG
MANDOS INTERNOS DEL CAMBIO

MODIFICA	N. ORDINAZIONE	QT.	DENOMINAZIONE	DESIGNATION	DESCRIPTION	BENENNUNG	DENOMINACIONES
	2105.20195	2	VITE	VIS	SCREW	SCHRAUBE	TORNILLO
	2145.17365	2	RONDELLA	RONDELLE	WASHER	SCHEIBE	ARANDELLA
	2160.18868	1	SPINA	BROCHE	PIN	STIFT	ESPINA
	2900.34026	3	SFERA	BILLE	BALL	KUGEL	ESFERA
	11600.13058.06	1	ASTA SELEZIONE MARCE	DOIGT DE COMMANDE	STRIKER ROD	SCHALTSTANGE	VARILLA DE CAMBIO
	11600.13500.09	1	ASTA 1A-2A	DOIGT DE COMMANDE	STRIKER ROD	SCHALTSTANGE	VARILLA DE CAMBIO
	11600.13501.09	1	ASTA 3A-4A	DOIGT DE COMMANDE	STRIKER ROD	SCHALTSTANGE	VARILLA DE CAMBIO
	11600.13502.09	1	ASTA 5A-RM	DOIGT DE COMMANDE	STRIKER ROD	SCHALTSTANGE	VARILLA DE CAMBIO
	11600.13503.00	1	FORCELLA 1A-2A	FOURCHETTE	FORK	GABEL	HORQUILLA
	11600.13504.00	1	FORCELLA 3A-4A	FOURCHETTE	FORK	GABEL	HORQUILLA
	11600.13505.05	1	FORCELLA 5A-RM	FOURCHETTE	FORK	GABEL	HORQUILLA
	11600.13506.02	2	NOTTOLINO SICUREZZA	AXE	PIN	KLINKE	PESTILLO
	11600.13508.06	3	MOLLA	RESSORT	SPRING	FEDER	MUELLE
	11600.13509.02	3	TAPPO	BOUCHON	PLUG	VERSCHLUSSCHRAUBE	TAPON
	11600.13954.00	3	GUARNIZIONE	JOINT	GASKET	DICHTUNG	JUNTA

PARTICOLARI COMANDO INTERNO CAMBIO
DETAIL DE LA COMMANDE INTERIEURE DE BOITE DE VITESSES
GEARBOX CONTROL DETAILS
EINZELTEILE DER INNEREN GETRIEBESCHALTUNG
DETALLE MANDO INTERIOR CAMBIO

TAV. 12.21

1ª	EDIZIONE	1974	APRILE
1ère	EDITION		AVRIL
1st	EDITION		APRIL
1ª	AUSGABE		APRIL
1ra	EDICION		ABRIL

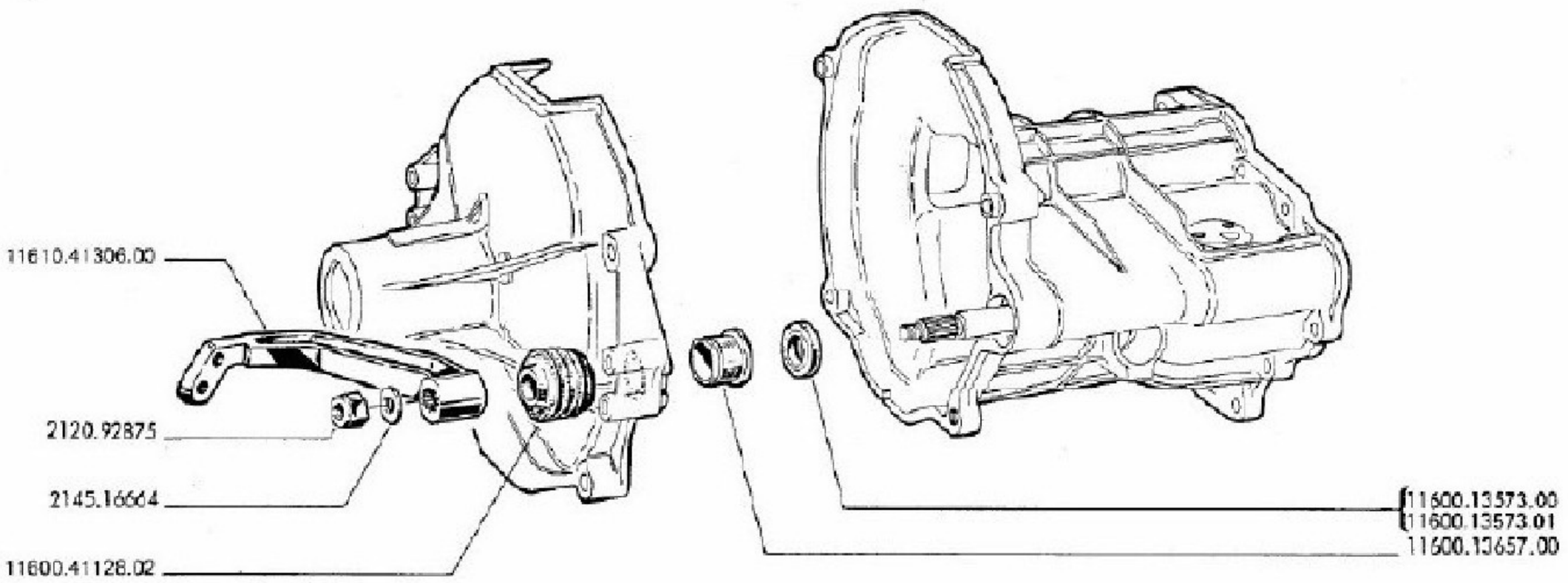

TAV. 12.21/0

PARTICOLARI COMANDO INTERNO CAMBIO
DETAIL DE COMMANDE INTERIEURE DE BOITE DE VITESSES
GEARBOX CONTROL DETAILS
EINZELTEILE DER INNEN GETRIEBESCHALTUNG
DETALLE MANDO INTERIOR CAMBIO

MODIFICA	N. ORDINAZIONE		QT.	DENOMINAZIONE	DESIGNATION	DESCRIPTION	BENENNUNG	DENOMINACIONES
	2120.92875		1	DADO	ECROU	NUT	MUTTER	TUERCA
	2145.16664		1	RONDELLA	RONDELLE	WASHER	SCHEIBE	ARANDELLA
	11600.13573.00	*	1	ANELLO TENUTA	JOINT	SEAL	DICHTRING	JUNTA
	11600.13573.01	*	1	ANELLO TENUTA	JOINT	SEAL	DICHTRING	JUNTA
	11600.13657.00		1	BOCCOLA	BAGUE	BUSHING	BUECHSE	CASQUILLO
	11600.41128.02		1	SOFFIETTO	SOUFFLET	BELLOWS	BALG	FUELLE
	11610.41306.00		1	LEVA	LEVIER	LEVER	HEBEL	PALANCA

* ALTERNATIVA ALTERNATIVE ALTERNATIVE WAHLWEISE ALTERNATIVA

LEVA COMANDO CAMBIO
LEVIER DE CHANGEMENT DE VITESSES
GEARSHIFT LEVER
GETRIEBESCHALTHEBEL
PALANCA ACCIONAMIENTO CAMBIO

TAV. 12.22

1ª	EDIZIONE	1974	APRILE
1ère	EDITION		AVRIL
1st	EDITION		APRIL
1.	AUSGABE		APRIL
1ª	EDICION		ABRIL

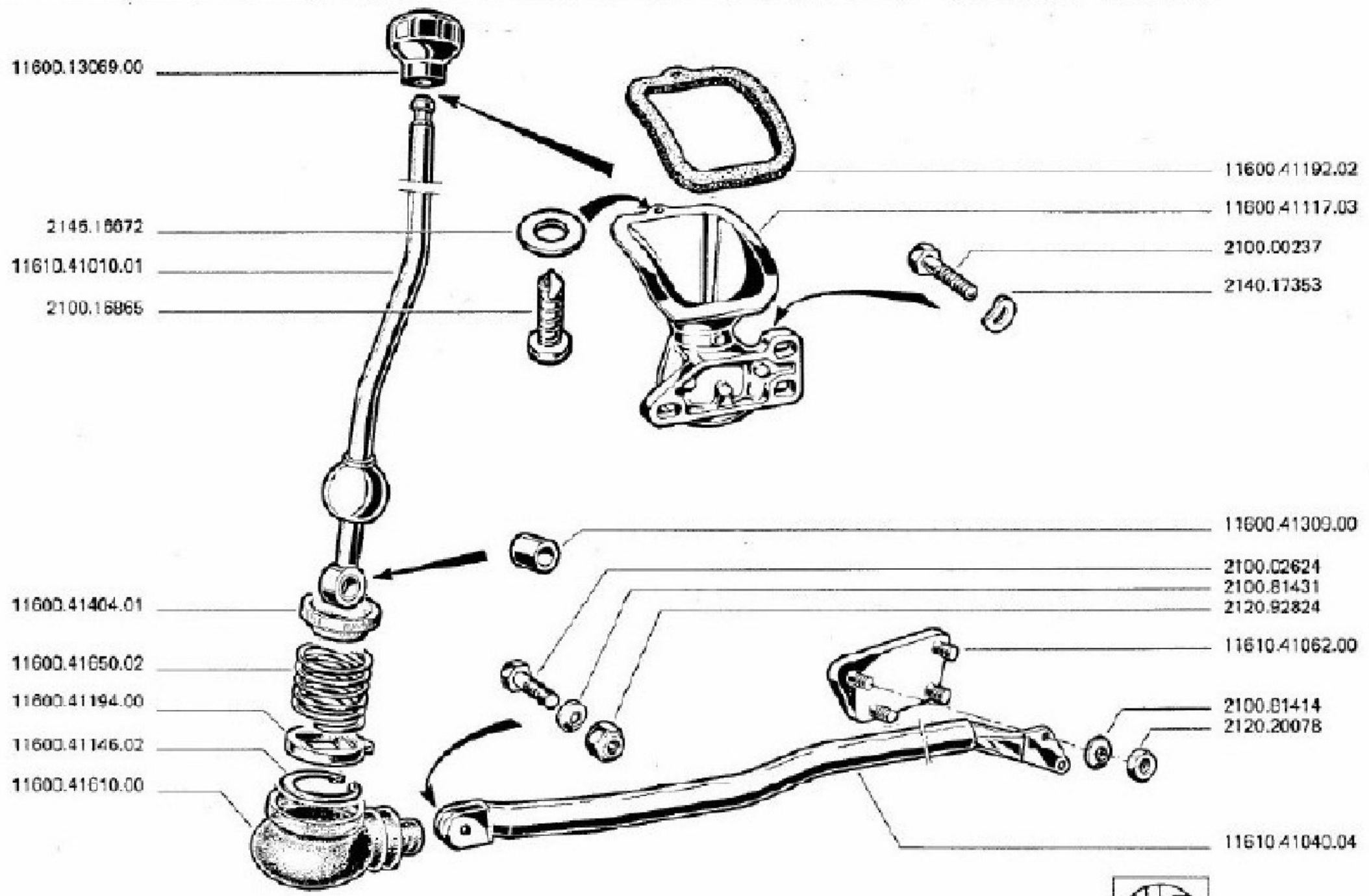

TAV. 12.22/0

LEVA COMANDO CAMBIO
LEVIER DE CHANGEMENT DE VITESSES
GEARSHIFT LEVER
GETRIEBESCHALTHEBEL
PALANCA ACCIONAMIENTO CAMBIO

MODIFICA	N. ORDINAZIONE	QT.	DENOMINAZIONE	DESIGNATION	DESCRIPTION	BENENNUNG	DENOMINACIONES
	2100.00237	3	VITE	VIS	SCREW	SCHRAUBE	TORNILLO
	2100.02624	1	VITE	VIS	SCREW	SCHRAUBE	TORNILLO
	2100.16865	1	VITE	VIS	SCREW	SCHRAUBE	TORNILLO
	2100.81414	4	RONDELLA	RONDELLE	WASHER	SCHEIBE	ARANDELLA
	2100.81431	1	RONDELLA	RONDELLE	WASHER	SCHEIBE	ARANDELLA
	2120.20078	4	DADO	ECROU	NUT	MUTTER	TUERCA
	2120.92824	1	DADO	ECROU	NUT	MUTTER	TUERCA
	2140.17353	3	RONDELLA	RONDELLE	WASHER	SCHEIBE	ARANDELLA
	2145.16672	1	RONDELLA	RONDELLE	WASHER	SCHEIBE	ARANDELLA
	11600.13069.00	1	PONELLO	BOUTON	KNOB	KNOPF	LLAVE
	11600.41117.03	1	SUPPORTO	SUPPORT	SUPPORT	LAGERUNG	SOPORTE
	11600.41146.02	1	ANELLO ELASTICO	JONC DE RETENUE	RETAINER RING	SPRENGRING	ANILLO ELASTICO
	11600.41192.02	1	GUARNIZIONE	JOINT	GASKET	DICHTUNG	JUNTA
	11600.41194.00	1	RONDELLA	RONDELLE	WASHER	SCHEIBE	ARANDELLA
	11600.41309.00	1	BOCCOLA	BAGUE	BUSHING	BUECHSE	CASQUILLO
	11600.41404.01	1	SEDE PER LEVA	SIEGE	SEAT	SITZ	SEDE
	11600.41610.00	1	SOFFIETTO	SOUFFLET	BELLOWS	BALG	FUELLE
	11600.41650.02	1	MOLLA	RESSORT	SPRING	FEDER	MUELLE
	11610.41010.01	1	LEVA	LEVIER	LEVER	HEBEL	PALANCA
	11610.41040.04	1	ASTA	DOIGT DE COMMANDE	STRIKER ROD	SCHALTSTANGE	VARILLA DE CAMBIO
	11610.41062.00	1	GIUNTO ELASTICO	JOINT ELASTIQUE	FLEXIBLE JOINT	FEDERKUPPLUNG	JUNTO ELASTICO

1ª EDIZIONE APRILE
1ère EDITION AVRIL
1st EDITION APRIL
1. AUSGABE APRIL
1ra EDICION ABRIL
1974
AGGIORNAMENTO

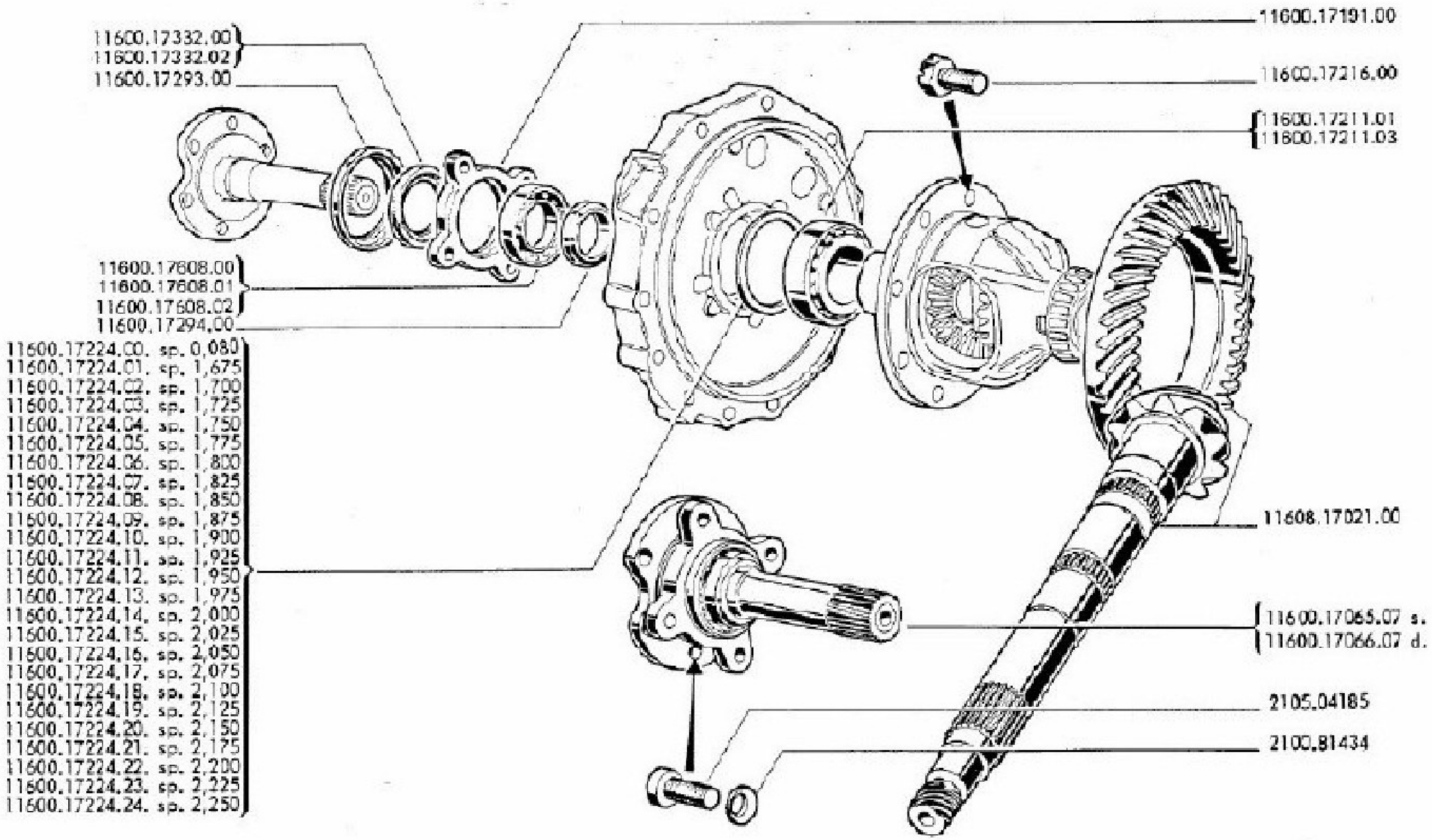

TAV. 14.10/0

RUOTISMI DEL PONTE
MECANISME DU PONT
DIFFERENTIAL GEARS
RADSATZ DER HINTERACHSE
MECANISMO DEL PUENTE

MODIFICA	N. ORDINAZIONE		QT.	DENOMINAZIONE	DESIGNATION	DESCRIPTION	BENENNUNG	DENOMINACIÓNES
	2100.81434		8	RONDELLA	RONDELLE	WASHER	SCHEIBE	ARANDELLA
	2105.04185		8	VITE	VIS	SCREW	SCHRAUBE	TORNILLO
	11600.17065.07		1	ALBERO PONTE S.	ARBRE	SHAFT	WELLE	ARBOL
	11600.17066.07		1	ALBERO PONTE D.	ARBRE	SHAFT	WELLE	ARBOL
	11600.17191.00		2	COPERCHIETTO	COUVERCLE	COVER	DECKEL	TAPA
	11600.17211.01	*	2	CUSCINETTO	ROULEMENT	BEARING	LAGER	COJINETE
	11600.17211.03	*	2	CUSCINETTO	ROULEMENT	BEARING	LAGER	COJINETE
	11600.17216.00		8	VITE	VIS	SCREW	SCHRAUBE	TORNILLO
	11600.17224.00		0	RASAMENTO SP. 0,080	BAGUE	SHIM	AUSGLEICH	ALISAMENTO
	11600.17224.01		0	RASAMENTO SP. 1,675	BAGUE	SHIM	AUSGLEICH	ALISAMENTO
	11600.17224.02		0	RASAMENTO SP. 1,700	BAGUE	SHIM	AUSGLEICH	ALISAMENTO
	11600.17224.03		0	RASAMENTO SP. 1,725	BAGUE	SHIM	AUSGLEICH	ALISAMENTO
	11600.17224.04		0	RASAMENTO SP. 1,750	BAGUE	SHIM	AUSGLEICH	ALISAMENTO
	11600.17224.05		0	RASAMENTO SP. 1,775	BAGUE	SHIM	AUSGLEICH	ALISAMENTO
	11600.17224.06		0	RASAMENTO SP. 1,800	BAGUE	SHIM	AUSGLEICH	ALISAMENTO
	11600.17224.07		0	RASAMENTO SP. 1,825	BAGUE	SHIM	AUSGLEICH	ALISAMENTO
	11600.17224.08		0	RASAMENTO SP. 1,850	BAGUE	SHIM	AUSGLEICH	ALISAMENTO
	11600.17224.09		0	RASAMENTO SP. 1,875	BAGUE	SHIM	AUSGLEICH	ALISAMENTO
	11600.17224.10		0	RASAMENTO SP. 1,900	BAGUE	SHIM	AUSGLEICH	ALISAMENTO
	11600.17224.11		0	RASAMENTO SP. 1,925	BAGUE	SHIM	AUSGLEICH	ALISAMENTO
	11600.17224.12		0	RASAMENTO SP. 1,950	BAGUE	SHIM	AUSGLEICH	ALISAMENTO

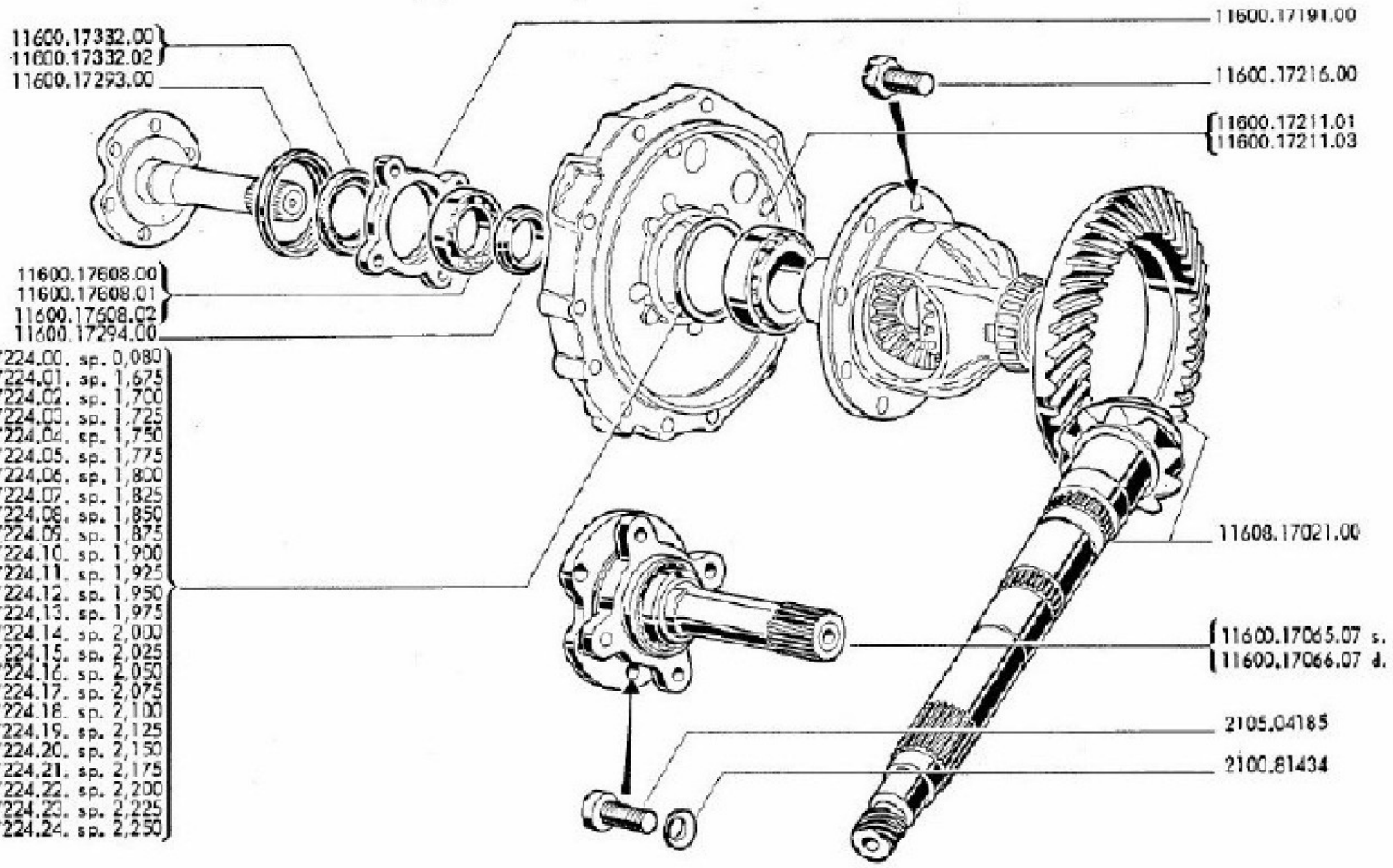
11600.17332.00
11600.17332.02
11600.17293.00
11600.17608.00
11600.17608.01
11600.17608.02
11600.17294.00
11600.17224.00. sp. 0,080
11600.17224.01. sp. 1,675
11600.17224.02. sp. 1,700
11600.17224.03. sp. 1,725
11600.17224.04. sp. 1,750
11600.17224.05. sp. 1,775
11600.17224.06. sp. 1,800
11600.17224.07. sp. 1,825
11600.17224.08. sp. 1,850
11600.17224.09. sp. 1,875
11600.17224.10. sp. 1,900
11600.17224.11. sp. 1,925
11600.17224.12. sp. 1,950
11600.17224.13. sp. 1,975
11600.17224.14. sp. 2,000
11600.17224.15. sp. 2,025
11600.17224.16. sp. 2,050
11600.17224.17. sp. 2,075
11600.17224.18. sp. 2,100
11600.17224.19. sp. 2,125
11600.17224.20. sp. 2,150
11600.17224.21. sp. 2,175
11600.17224.22. sp. 2,200
11600.17224.23. sp. 2,225
11600.17224.24. sp. 2,250
11600.17191.00
11600.17216.00
11600.17211.01
11600.17211.03
11608.17021.00
11600.17065.07 s.
11600.17066.07 d.
2105.04185
2100.81434

TAV. 14.10/0

RUOTISMI DEL PONTE
MECANISME DU PONT
DIFFERENTIAL GEARS
RADSATZ DER HINTERACHSE
MECANISMO DEL PUENTE

MODIFICA	N. DRDINAZIONE		QT.	DENOMINAZIONE	DESIGNATION	DESCRIPTION	BENENNUNG	DENOMINACIÓN
	11600.17224.13		0	RASAMENTO SP. 1,975	BAGUE	SHIM	AUSGLEICH	ALISAMENTO
	11600.17224.14		0	RASAMENTO SP. 2,000	BAGUE	SHIM	AUSGLEICH	ALISAMENTO
	11600.17224.15		0	RASAMENTO SP. 2,025	BAGUE	SHIM	AUSGLEICH	ALISAMENTO
	11600.17224.16		0	RASAMENTO SP. 2,050	BAGUE	SHIM	AUSGLEICH	ALISAMENTO
	11600.17224.17		0	RASAMENTO SP. 2,075	BAGUE	SHIM	AUSGLEICH	ALISAMENTO
	11600.17224.18		0	RASAMENTO SP. 2,100	BAGUE	SHIM	AUSGLEICH	ALISAMENTO
	11600.17224.19		0	RASAMENTO SP. 2,125	BAGUE	SHIM	AUSGLEICH	ALISAMENTO
	11600.17224.20		0	RASAMENTO SP. 2,150	BAGUE	SHIM	AUSGLEICH	ALISAMENTO
	11600.17224.21		0	RASAMENTO SP. 2,175	BAGUE	SHIM	AUSGLEICH	ALISAMENTO
	11600.17224.22		0	RASAMENTO SP. 2,200	BAGUE	SHIM	AUSGLEICH	ALISAMENTO
	11600.17224.23		0	RASAMENTO SP. 2,225	BAGUE	SHIM	AUSGLEICH	ALISAMENTO
	11600.17224.24		0	RASAMENTO SP. 2,250	BAGUE	SHIM	AUSGLEICH	ALISAMENTO
	11600.17293.00		2	ANELLO PARASPRUZZI	BAGUE	RING	RING	ANILLO
	11600.17294.00		2	GHIERA	ECROU A ENCOCHES	RING NUT	RINGMUTTER	ARANDELA
	11600.17332.00	*	2	ANELLO TENUTA	JOINT	SEAL	DICHTRING	JUNTA
	11600.17332.02	*	2	ANELLO TENUTA	JOINT	SEAL	DICHTRING	JUNTA
	11600.17608.00	*	2	CUSCINETTO	ROULEMENT	BEARING	LAGER	COJINETE
	11600.17608.01	*	2	CUSCINETTO	ROULEMENT	BEARING	LAGER	COJINETE
	11600.17608.02	*	2	CUSCINETTO	ROULEMENT	BEARING	LAGER	COJINETE
	11608.1702L.00		1	COPPIA CONICA 10/41	ENTRAINEMENT CONIQUE	BEVEL DRIVE	KEGELRADGETRIEBE	PAREJA CONICA

* ALTERNATIVA — ALTERNATIVE — ALTERNATIVE — WAHLWEISE — ALTERNATIVA

SCATOLA DIFFERENZIALE
BOITIER DE DIFFERENTIEL
DIFFERENTIAL CASE
AUSGLEICHGETRIEBEGEHÄUSE
CAJA DIFERENCIAL

TAV. 14.30

1ª	EDIZIONE	1974	APRILE
1st	EDITION		APRIL
1re	EDITION		APRIL
1.	AUSGABE		APRIL
1ra	EDICION		ABRIL

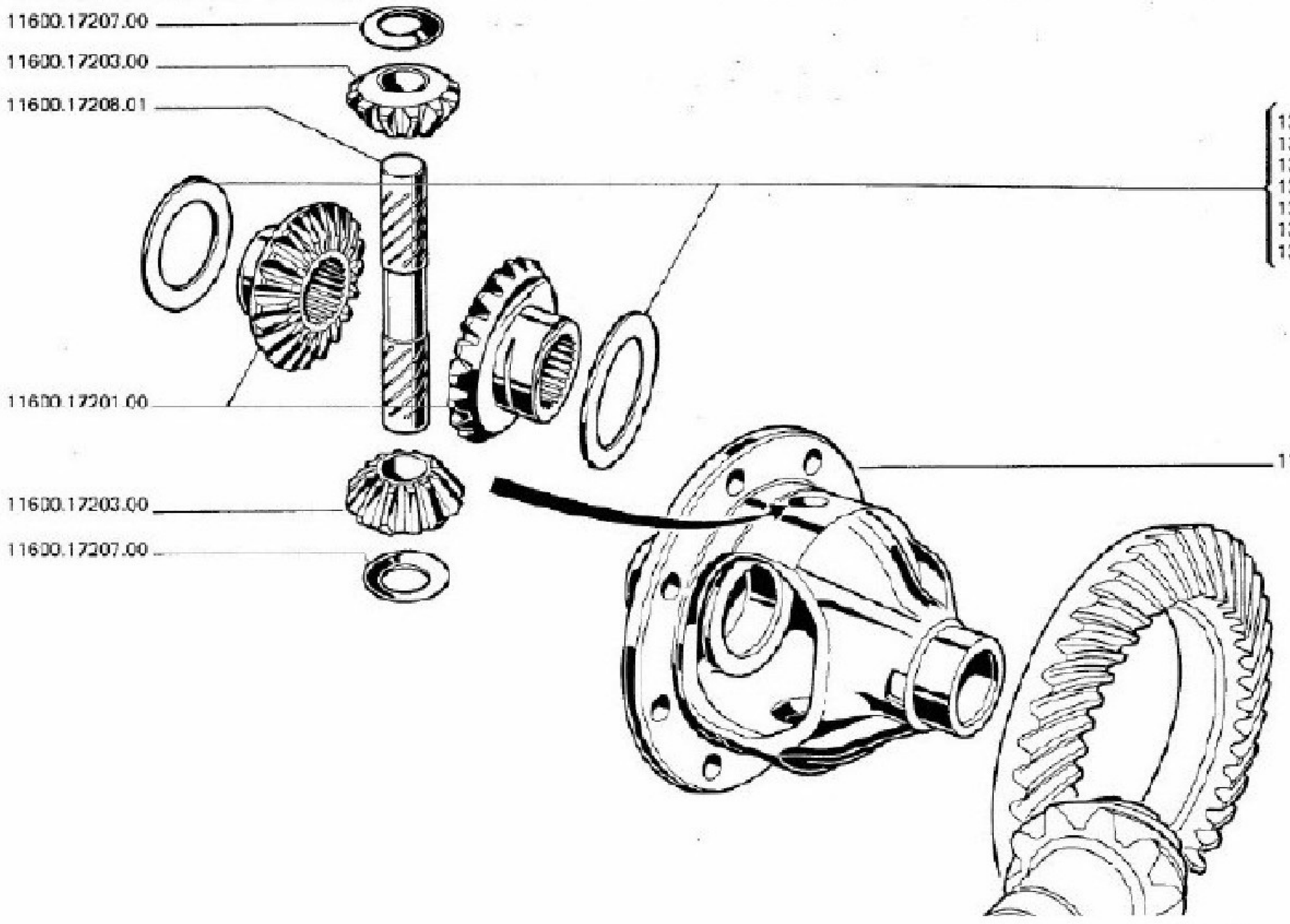

TAV. 14.30/0

SCATOLA DIFFERENZIALE
BOITIER DE DIFFERENTIEL
DIFFERENTIAL CASE
AUSGLEICHGETRIEBEGEHAUSE
CAJA DIFERENCIAL

MODIFICA	N. ORDINAZIONE	QT.	DENOMINAZIONE	DESIGNATION	DESCRIPTION	BENENNUNG	DENOMINACIONES
	1356.31004	0	RASAMENTO SP. 1,65	BAGUE	SHIM	AUSGLEICH	ALISAMENTO
	1356.31004 01	0	RASAMENTO SP. 1,60	BAGUE	SHIM	AUSGLEICH	ALISAMENTO
	1356.31004 02	0	RASAMENTO SP. 1,70	BAGUE	SHIM	AUSGLEICH	ALISAMENTO
	1356.31004 03	0	RASAMENTO SP. 1,55	BAGUE	SHIM	AUSGLEICH	ALISAMENTO
	1356.31004 04	0	RASAMENTO SP. 1,40	BAGUE	SHIM	AUSGLEICH	ALISAMENTO
	1356.31004 05	0	RASAMENTO SP. 1,45	BAGUE	SHIM	AUSGLEICH	ALISAMENTO
	1356.31004 06	0	RASAMENTO SP. 1,50	BAGUE	SHIM	AUSGLEICH	ALISAMENTO
	11600.17200.02	1	SCATOLA	CARTER	CASING	GEHAEUSE	CAJA
	11600.17201.00	2	PLANETARIO	PLANETAIRE	PLANET GEAR	SONNENRAD	PLANETARIO
	11600.17203.00	2	SATELLITE	SATELLITE	SUN GEAR	PLANETENRAD	SATELITE
	11600.17207.00	2	RONDELLA	RONDELLE	WASHER	SCHEIBE	ARANDELLA
	11600.17208.01	1	PERNO	AXE	PIVOT PIN	ZAPFEN	PERNO

1ª EDIZIONE APRILE 1974
1ère EDITION AVRIL
1st EDITION APRIL
1. AUSGABE APRIL
1ra EDICION ABRIL
DATA ALL'ORIGINALE

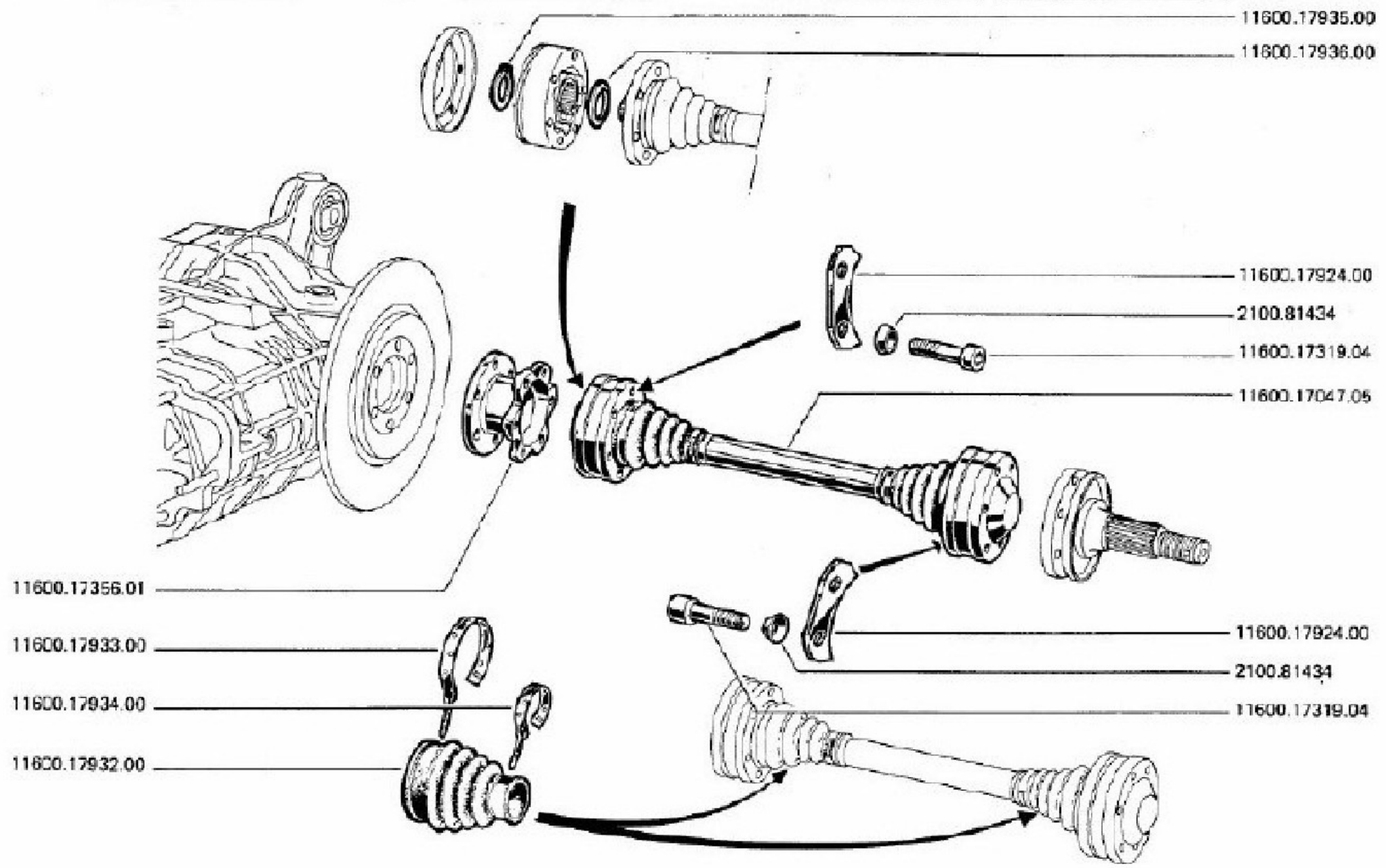

TAV. 14.40/0

SEMIALBERI DIFFERENZIALE
ARBRES DE ROUES
AXLE SHAFTS
HINTERACHSWELLEN
SEMIEJES DIFERENCIAL

MODIFICA	N. ORDINAZIONE	QT.	DENOMINAZIONE	DESIGNATION	DESCRIPTION	BENENNUNG	DENOMINACIONES
	2100.81434	24	RONDELLA	RONDELLE	WASHER	SCHEIBE	ARANDELLA
	11600.17047.05	2	SEMIASSE	ARBRE DE ROUE	AXLE SHAFT	HINTERACHSWELLE	SEMIEJE
	11600.17319.04	24	VITE	VIS	SCREW	SCHRAUBE	TORNILLO
	11600.17356.01	2	FLANGIA	BRIDE	FLANGE	FLANSCH	BRIDA
	11600.17924.00	12	PIASTRINA	PLAQUETTE	PLATE	PLAETTCHEN	PLAQUITA
	11600.17932.00	4	SOFFIETTO	SOUFFLET	BELLOWS	BALG	FUELLE
	11600.17933.00	4	FASCETTA	PATTE DE FIXATION	CLAMP	SCHELLE	ABRAZADERA
	11600.17934.00	4	FASCETTA	PATTE DE FIXATION	CLAMP	SCHELLE	ABRAZADERA
	11600.17935.00	4	ANELLO DI SICUREZZA	ARRETOIR	LOCKRING	SICHERUNGSRING	ANILLO DE FRENO
	11600.17936.00	4	MOLLA A TAZZA	RESSORT	SPRING	FEDER	MUELLE

TUBAZIONI PER COMANDO IDRAULICO FRENI
CANALISATIONS DE FREIN HYDRAULIQUE
HYDRAULIC BRAKE PIPING
BREMSLEITUNGEN
TUBERIAS PARA ACCIONAMIENTO HIDRAULICO FRENOS

TAV. 21.01

1 EDIZIONE / EDITION / EDITION / AUSGABE / EDICION 1974 APRILE / APRIL / APRIL / APRIL / ABRIL

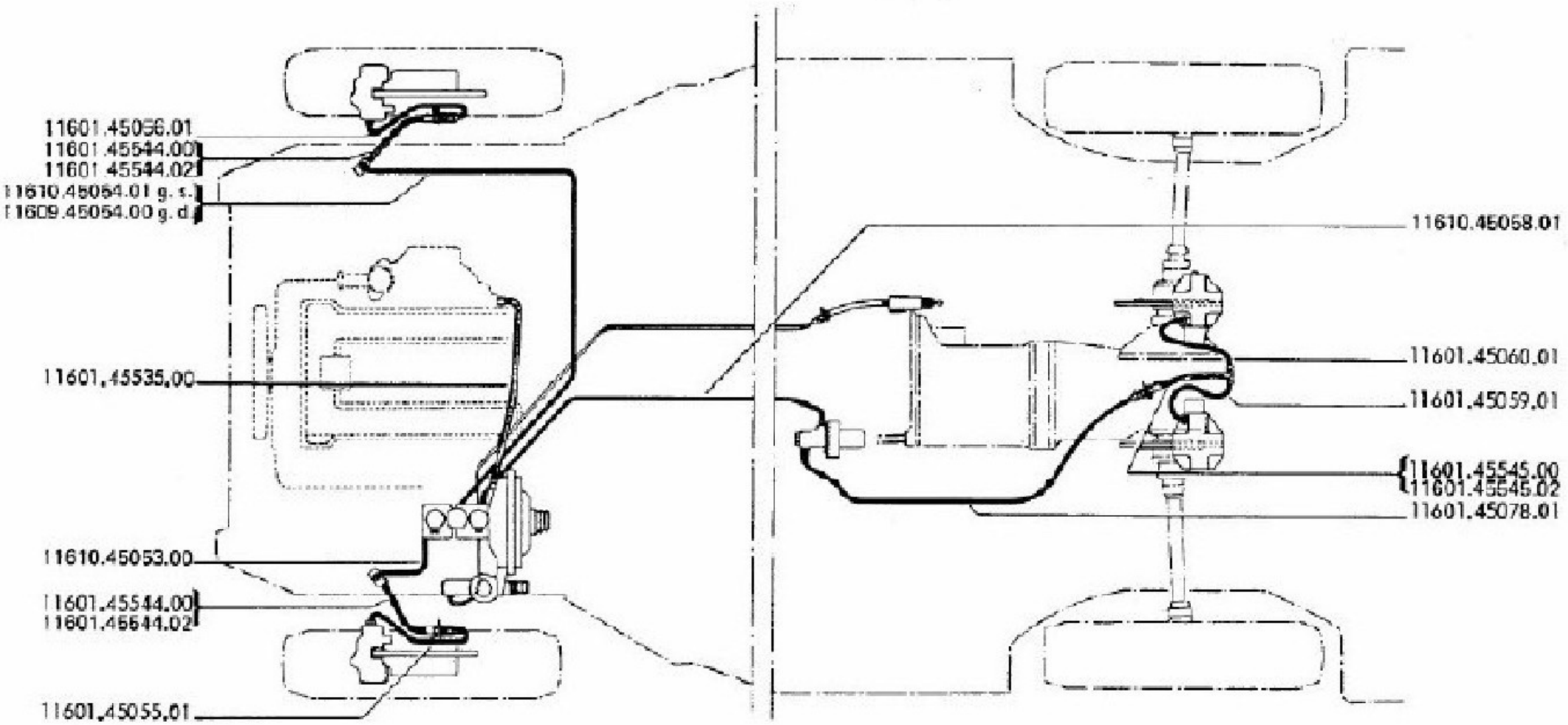

TAV. 21.0170

TUBAZIONI PER COMANDO IDRAULICO FRENI
CANALISATIONS DE FREIN HYDRAULIQUE
HYDRAULIC BRAKE PIPING
BREMSLEITUNGEN
TUBERIAS PARA ACCIONAMIENTO HIDRAULICO FRENOS

MODIFICA	N. ORDINAZIONE		QT.	DENOMINAZIONE	DESIGNATION	DESCRIPTION	BENENNUNG	DENOMINACION
	11601.45055.01		1	TUBO A PINZA ANT.S.	TUBE	PIPE	ROHR	TUBO
	11601.45056.01		1	TUBO A PINZA ANT.D.	TUBE	PIPE	ROHR	TUBO
	11601.45059.01		1	TUBO A PINZA POST.S.	TUBE	PIPE	ROHR	TUBO
	11601.45060.01		1	TUBO A PINZA POST.D.	TUBE	PIPE	ROHR	TUBO
	11601.45078.01		1	TUBO DAL LIMITATORE	TUBE	PIPE	ROHR	TUBO
	11601.45535.00		1	TUBO DAL SERVOFRENO	TUBE	PIPE	ROHR	TUBO
	11601.45544.00	*	2	FLESSIBILE ANT.	CABLE	WIRE	ZUGDRAHT	BOWDEN
	11601.45544.02	*	2	FLESSIBILE ANT.	CABLE	WIRE	ZUGDRAHT	BOWDEN
	11601.45545.00	*	1	FLESSIBILE POST.	CABLE	WIRE	ZUGDRAHT	BOWDEN
	11601.45545.02	*	1	FLESSIBILE POST.	CABLE	WIRE	ZUGDRAHT	BOWDEN
	11609.45054.00	.	1	TUBO AL FLESS.D.	TUYAU	HOSE	SCHLAUCH	MANGA
	11610.45053.00		1	TUBO AL FLESS.S.	TUYAU	HOSE	SCHLAUCH	MANGA
	11610.45054.01	G	1	TUBO AL FLESS.D.	TUYAU	HOSE	SCHLAUCH	MANGA
	11610.45058.01		1	TUBO AL LIMITATORE	TUBE	PIPE	ROHR	TUBO

* ALTERNATIVA — ALTERNATIVE — ALTERNATIVE — WAHLWEISE — ALTERNATIVA
. PER G.D.
G PER G.S.

PARTICOLARI DEL COMANDO IDRAULICO FRENI
DETAIL DE LA COMMANDE HYDRAULIQUE DE FREINS
COMPONENTS OF BRAKE HYDRAULIC SYSTEM
EINZELTEILE DER HYDR. BREMSBETÄTIGUNG
PIEZAS DEL ACCIONAMIENTO FRENOS

TAV. 21.02

1ª EDIZIONE 1974 APRILE
1ère EDITION AVRIL
1st EDITION APRIL
1. AUSGABE APRIL
1ª EDICION ABRIL

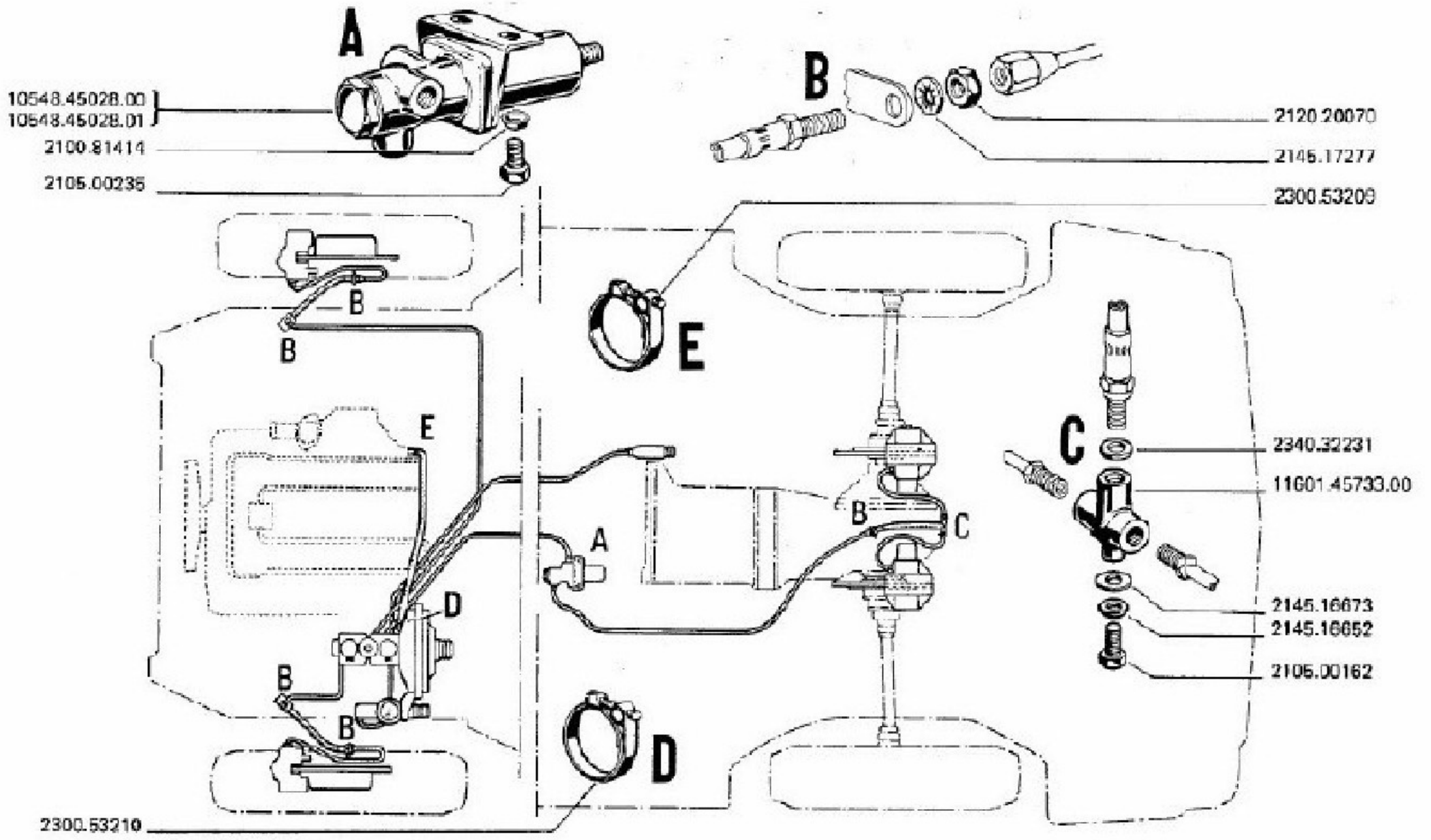

TAV. 21.02/0

PARTICOLARI DEL COMANDO IDRAULICO FRENI
DETAIL DE LA COMMANDE HYDRAULIQUE DE FREINS
COMPONENTS OF BRAKE HYDRAULIC SYSTEM
EINZELTEILE DER HYDR. BREMSBETATIGUNG
PIEZAS DEL ACCIONAMIENTO FRENOS

MODIFICA	N. ORDINAZIONE		QT.	DENOMINAZIONE	DÉSIGNATION	DESCRIPTION	BENENNUNG	DENOMINACIONES
	2100.81414		2	RONDELLA	RONDELLE	WASHER	SCHEIBE	ARANDELLA
	2105.00162		1	VITE	VIS	SCREW	SCHRAUBE	TORNILLO
	2105.00235		2	VITE	VIS	SCREW	SCHRAUBE	TORNILLO
	2120.20070		5	DADO	ECROU	NUT	MUTTER	TUERCA
	2145.16652		1	RONDELLA	RONDELLE	WASHER	SCHEIBE	ARANDELLA
	2145.16673		1	RONDELLA	RONDELLE	WASHER	SCHEIBE	ARANDELLA
	2145.17277		5	RONDELLA	RONDELLE	WASHER	SCHEIBE	ARANDELLA
	2300.53209		1	FASCETTA	PATTE DE FIXATION	CLAMP	SCHELLE	ABRAZADERA
	2300.53210		1	FASCETTA	PATTE DE FIXATION	CLAMP	SCHELLE	ABRAZADERA
	2340.32231		1	GUARNIZIONE	JOINT	GASKET	DICHTUNG	JUNTA
	10548.45028.00	*	1	LIMITATORE FRENATA	LIMITEUR DE FREINAGE	PRESSURE REGULATOR	BEGRENZER	LIMITADOR
	10548.45028.01	*	1	LIMITATORE FRENATA	LIMITEUR DE FREINAGE	PRESSURE REGULATOR	BEGRENZER	LIMITADOR
	11601.45733.00		1	RACCORDO	RACCORD	UNION	VERTEILER	RACOR

* ALTERNATIVA ALTERNATIVE ALTERNATIVE WAHLWEISE ALTERNATIVA

GRUPPO SERVOFRENO-POMPA
ENSEMBLE SERVO-FREIN/MAITRE-CYLINDRE
MASTER CYLINDER/BOOSTER UNIT
BREMSVERSTÄRKER-HAUPTBREMSZYLINDER EINHEIT
GRUPO SERVOFRENO-BOMBA

ATE

TAV. 21.10

1	EDIZIONE	1974	APRILE
	EDITION		AVRIL
	EDITION		APRIL
	AUSGABE		APRIL
	EDICION		ABRIL

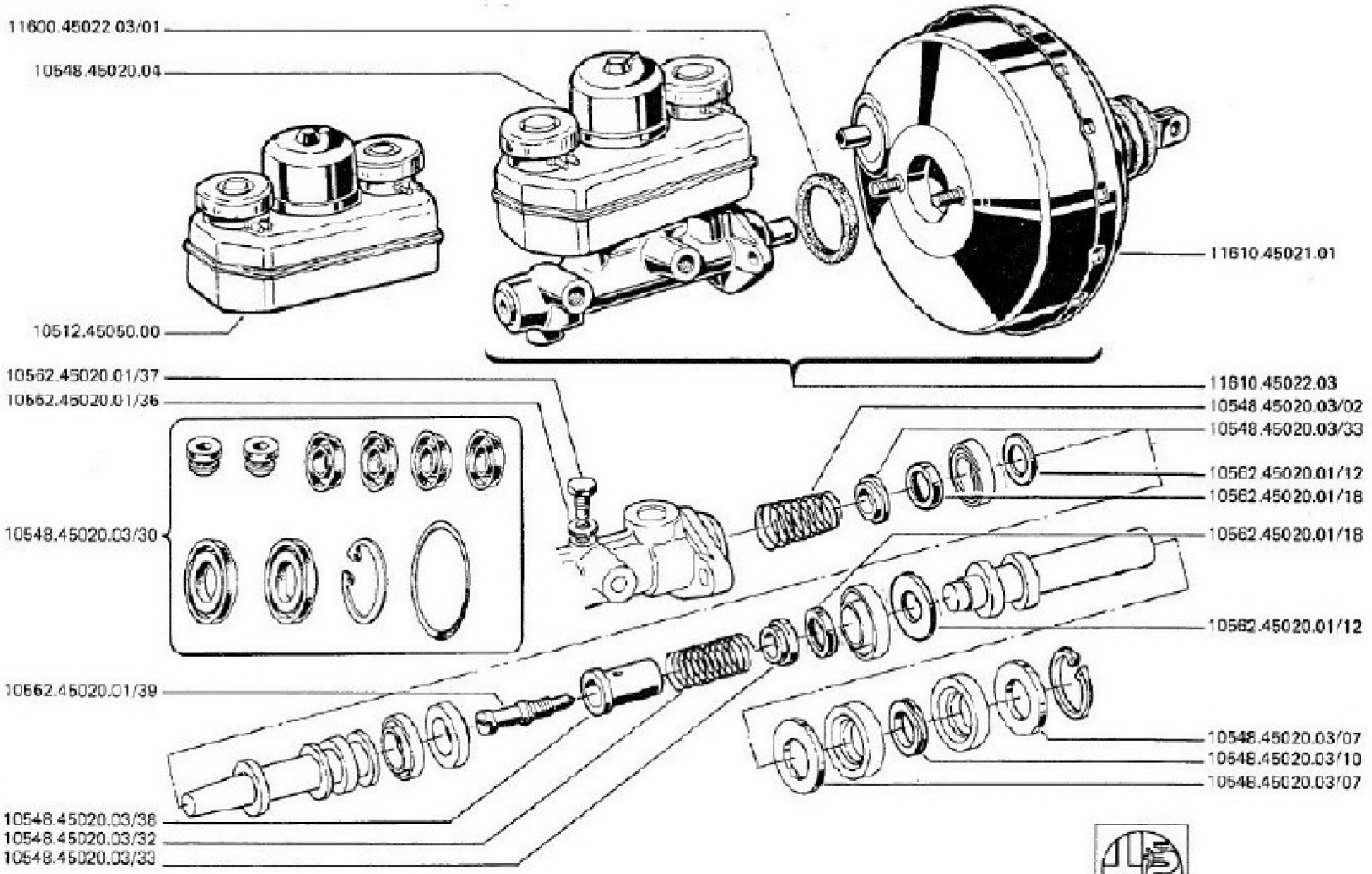

Alfetta GT

TAV. 21.10/0 GRUPPO SERVOFRENO-POMPA-ATE
ENSEMBLE SERVO-FREIN MAITRE-CYLINDRE
MASTER CYLINDER/BOOSTER UNIT
BREMSVERSTARKER - HAUPTBREMSZYLINDER EINHEIT
GRUPO SERVOFRENO-BOMBA

MODIFICA	N. ORDINAZIONE	QT.	DENOMINAZIONE	DESIGNATION	DESCRIPTION	BENENNUNG	DENOMINACIONES
	10512.45050.00	1	SERBATOIO OLIO	RESERVOIR	TANK	BEHAELTER	DEPOSITO
	10548.45020.03/02	1	MOLLA	RESSORT DE RAPPEL	PULL OFF SPRING	RUECKHOLFEDER	MUELLE DE RETROCESO
	10548.45020.03/07	2	RONDELLA	RONDELLE	WASHER	SCHEIBE	ARANDELLA
	10548.45020.03/10	1	ANELLO	BAGUE	RING	RING	ANILLO
	10548.45020.03/30	1	GRUPPO REVISIONE	COLLECTION-REPARATIO	OVERHAUL KIT	GRUPPE REPARATUR	GRUPO REVISION
	10548.45020.03/32	1	MOLLA	RESSORT DE RAPPEL	PULL OFF SPRING	RUECKHOLFEDER	MUELLE DE RETROCESO
	10548.45020.03/33	2	ANELLO APPOGGIO MOLL	COUPELLE DE RESSORT	SPRING SEAT	FEDERHALTERING	ANILLO APOYAMUELLE
	10548.45020.03/38	1	BOCCOLA	BAGUE	BUSHING	BUECHSE	CASQUILLO
	10549.45020.04	1	POMPA CON SERBATOIO	MAITRE-CYLINDRE	MASTER CYLINDER	HAUPTBREMSZYLINDER	BOMBA DE FRENOS
	10562.45020.01/12	2	RONDELLA	RONDELLE	WASHER	SCHEIBE	ARANDELLA
	10562.45020.01/18	2	SCODELLINO	COUPELLE	CUP	TELLER	CAZOLETA
	10562.45020.01/36	1	GUARNIZIONE	JOINT D ETANCHEITE	SEAL	DICHTUNG	GUARNICION
	10562.45020.01/37	1	TAPPO	BOUCHON	PLUG	VERSCHLUSSCHRAUBE	TAPON
	10562.45020.01/39	1	VITE	VIS	SCREW	SCHRAUBE	TORNILLO
	11600.45022.03/01	1	ANELLO TENUTA	JOINT	SEAL	DICHTRING	JUNTA
	11610.45021.01	1	SERVOFRENO	SERVO-FREIN	BRAKESERVO	BREMSVERSTAERKER	SERVOFRENO
	11610.45022.03	1	SERVOFRENO-POMPA	MAITRE CYLIND.-SERVO	CYLINDER-BOOSTER UNI	BREMSVERST. EINHEIT	SERVOFRENO-BOMBA

GRUPPO SERVOFRENO - POMPA
ENSEMBLE SERVO-FREIN/MAITRE-CYLINDRE
MASTER CYLINDER/BOOSTER UNIT
BREMSVERSTÄRKER-HAUPTBREMSZYLINDER-EINHEIT
GRUPO SERVOFRENO - BOMBA

BONALDI

TAV. 21.12

1°	EDIZIONE	1974	APRILE
1re	EDITION		AVRIL
1st	EDITION		APRIL
1.	AUSGABE		APRIL
1ª	EDICION		ABRIL

DATA EDIZIONE / EDITION DATE / ERSCHEINUNGSDATUM / FECHA EDICION

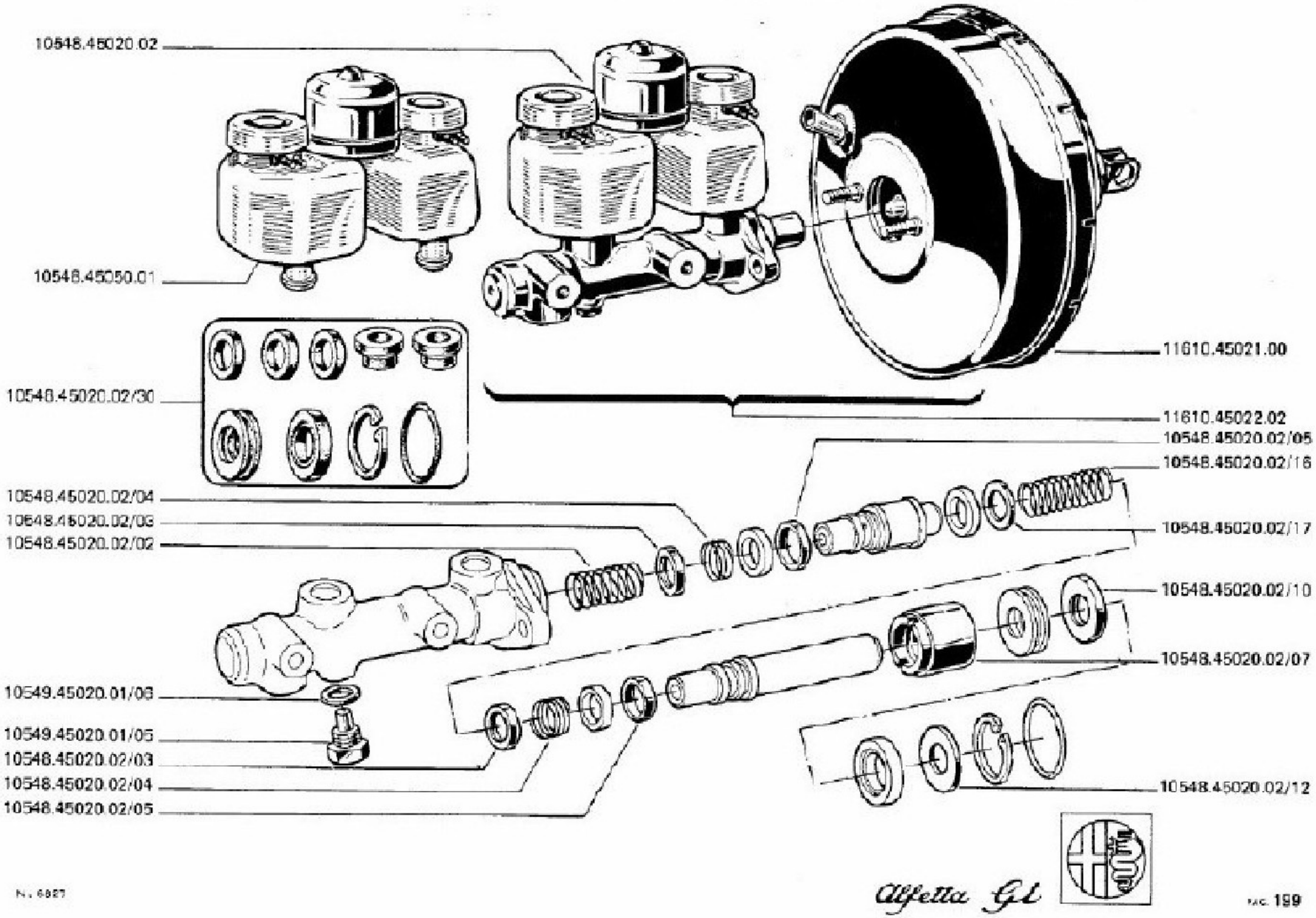

TAV. 21.12/0

GRUPPO SERVOFRENO-POMPA-BONALDI
ENSEMBLE SERVO-FREIN/MAITRE-CYLINDRE
MASTER CYLINDER/BOOSTER UNIT
BREMSVERSTARKER - HAUPTBREMSZYLINDER EINHEIT
GRUPO SERVOFRENO-BOMBA

MODIFICA	N. CODIFICAZIONE	QT.	DENOMINAZIONE	DESIGNATION	DESCRIPTION	BENENNUNG	DENOMINACIONES
	10548.45020.02	1	POMPA CON SERBATOIO	MAITRE-CYLINDRE	MASTER CYLINDER	HAUPTBREMSZYLINDER	BOMBA DE FRENOS
	10548.45020.02/02	1	MOLLA	RESSORT DE RAPPEL	PULL OFF SPRING	RUECKHOLFEDER	MUELLE DE RETROCESO
	10548.45020.02/03	2	SCODELLINO	COUPELLE	CUP	TELLER	CAZOLETA
	10548.45020.02/04	2	MOLLA	RESSORT DE RAPPEL	PULL OFF SPRING	RUECKHOLFEDER	MUELLE DE RETROCESO
	10548.45020.02/05	2	DISTANZIALE	ENTRETOISE	SPACER	ABSTANDSTUECK	SEPARADOR
	10548.45020.02/07	1	BOCCOLA	BAGUE	BUSHING	BUECHSE	CASQUILLO
	10548.45020.02/10	1	RONDELLA	RONDELLE	WASHER	SCHEIBE	ARANDELLA
	10548.45020.02/12	1	RONDELLA	RONDELLE	WASHER	SCHEIBE	ARANDELLA
	10548.45020.02/16	1	MOLLA	RESSORT DE RAPPEL	PULL OFF SPRING	RUECKHOLFEDER	MUELLE DE RETROCESO
	10548.45020.02/17	1	RONDELLA	RONDELLE	WASHER	SCHEIBE	ARANDELLA
	10548.45020.02/30	1	GRUPPO REVISIONE	COLLECTION-REPARATIO	OVERHAUL KIT	GRUPPE REPARATUR	GRUPO REVISION
	10548.45050.01	1	SERBATOIO OLIO	RESERVOIR	TANK	BEHAELTER	DEPOSITO
	10549.45020.01/05	1	TAPPO	BOUCHON	PLUG	VERSCHLUSSCHRAUBE	TAPON
	10549.45020.01/06	1	GUARNIZIONE	JOINT D ETANCHEITE	SEAL	DICHTUNG	GUARNICION
	11610.45021.00	1	SERVOFRENO	SERVO-FREIN	BRAKESERVO	BREMSVERSTAERKER	SERVOFRENO
	11610.45022.02	1	SERVOFRENO-POMPA	MAITRE CYLIND.-SERVO	CYLINDER-BOOSTER UNI	BREMSVERST. EINHEIT	SERVOFRENO-BOMBA

PARTICOLARI DEL SERBATOIO FRENI
DETAIL DU RESERVOIR D'ALIMENTATION
RESERVOIR HARDWARE
EINZELTEILE DES AUSGLEICHBEHÄLTERS
PIEZAS DEL DEPOSITO ALIMENTACION

ATE

TAV. 21.30

1	ª EDIZIONE	1974	APRILE
	ère EDITION		AVRIL
	ST EDITION		APRIL
	- AUSGABE		APRIL
	ª EDICION		ABRIL

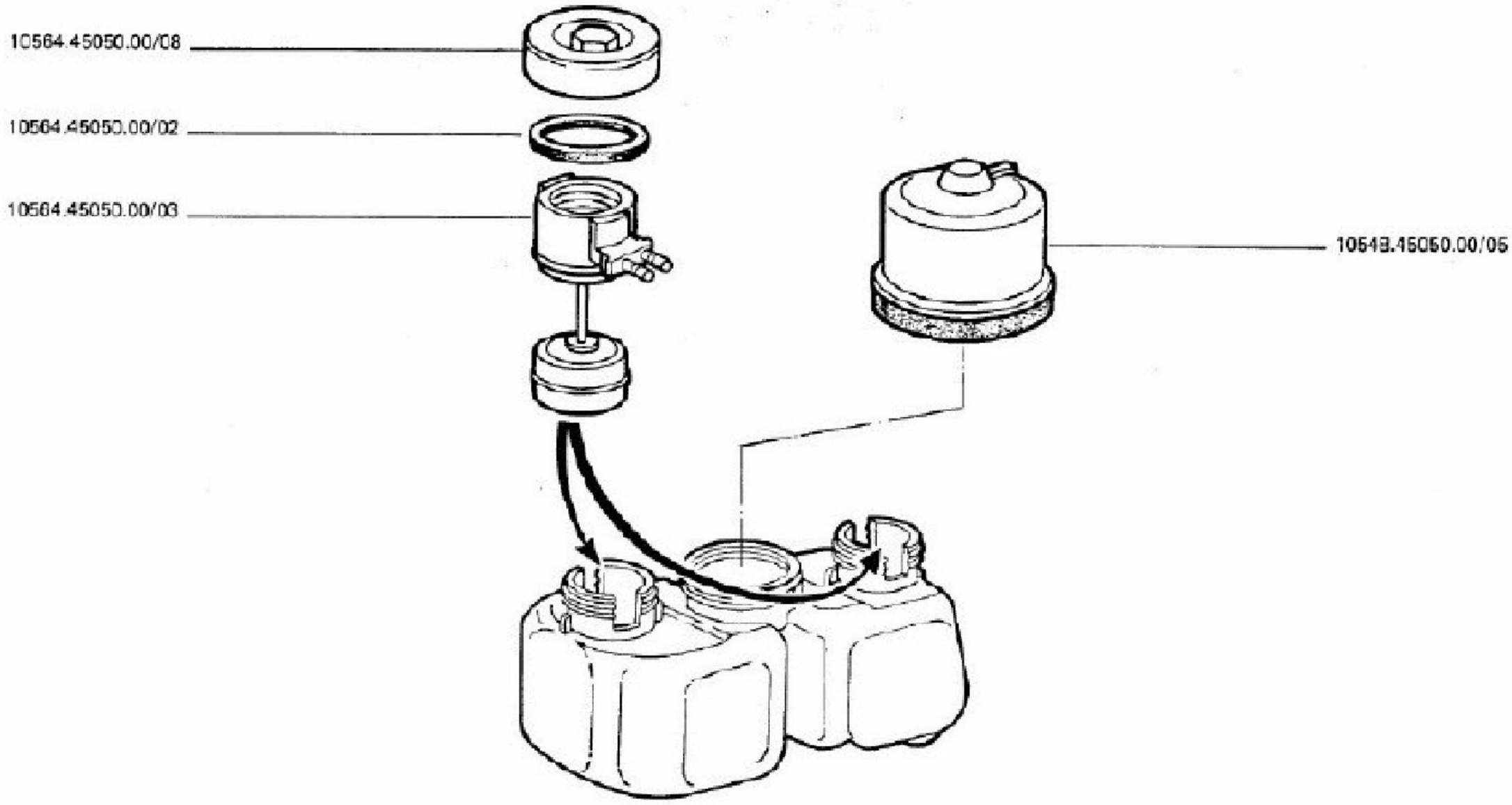

TAV. 21.30/0

PARTICOLARI DEL SERBATOIO FRENI-ATE
DETAIL DU RESERVOIR D ALIMENTATION
RESERVOIR HARDWARE
EINZELTEILE DES AUSGLEICHBEHAELTERS
PIEZAS DEL DEPOSITO ALIMENTACION

MODIFICA	N. ORDINAZIONE	QT.	DENOMINAZIONE	DÉSIGNATION	DESCRIPTION	BENENNUNG	DENOMINACIONES
	10548.45050.00/05	1	TAPPO	BOUCHON	PLUG	VERSCHLUSSCHRAUBE	TAPON
	10564.45050.00/02	2	GUARNIZIONE	JOINT	GASKET	DICHTUNG	JUNTA
	10564.45050.00/03	2	TRASMETTITORE	CONTACTEUR	SENDER UNIT	GEBER	TRANSMISOR
	10564.45050.00/08	2	TAPPO	BOUCHON	PLUG	VERSCHLUSSCHRAUBE	TAPON

PARTICOLARI DEL SERBATOIO FRENI
DETAIL DU RESERVOIR D'ALIMENTATION
RESERVOIR HARDWARE
EINZELTEILE DES AUSGLEICHBEHÄLTERS
PIEZAS DEL DEPOSITO ALIMENTACION

BONALDI

TAV. 21.31

1ª	EDIZIONE	1974	APRILE
1re	EDITION		AVRIL
1st	EDITION		APRIL
-	AUFLAGE		APRIL
1ra	EDICION		ABRIL

DATA DELL'ERRATA AGGIORNAMENTO

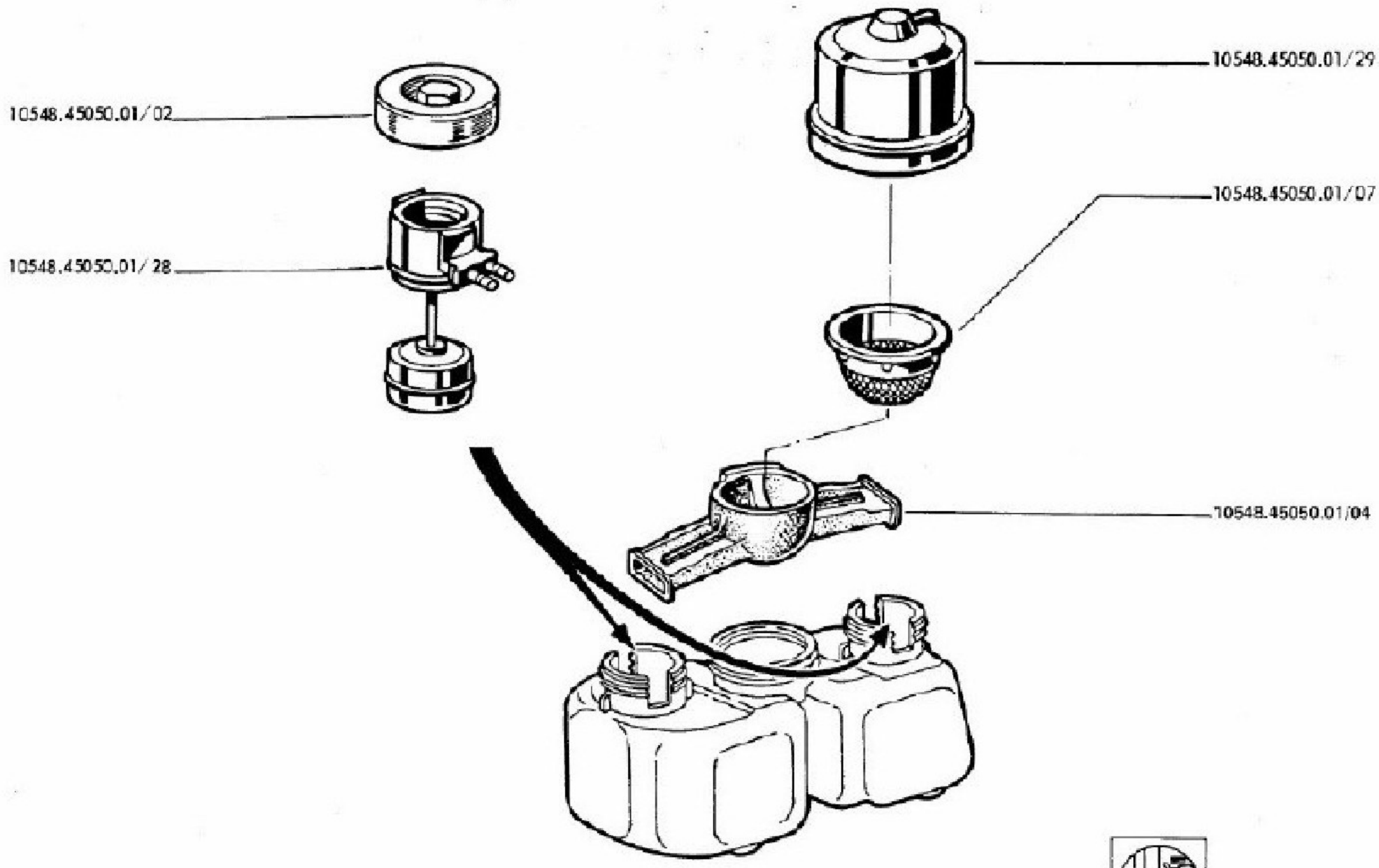

TAV. 21.31/0 PARTICOLARI DEL SERBATOIO FRENI - BONALDI
DETAIL DU RESERVOIR D ALIMENTATION
RESERVOIR HARDWARE
EINZELTEILE DES AUSGLEICHBEHAELTERS
PIEZAS DEL DEPOSITO ALIMENTACION

MODIFICA	N. ORDINAZIONE	QT.	DENOMINAZIONE	DESIGNATION	DESCRIPTION	BENENNUNG	DENOMINACIONES
	10548.45050.01/02	2	TAPPO	BOUCHON	PLUG	VERSCHLUSSCHRAUBE	TAPON
	10548.45050.01/04	1	DEVIATORE OLIO	REPARTITEUR	EQUALISER	FLUSSIGKEITSVERTEILE	DEVIADOR ACEITE
	10548.45050.01/07	1	FILTRO OLIO	FILTRE	FILTER	FILTER	FILTRO
	10548.45050.01/28	2	TRASMETTITORE	CONTACTEUR	SENDER UNIT	GEBER	TRANSMISOR
	10548.45050.01/29	1	TAPPO	BOUCHON	PLUG	VERSCHLUSSCHRAUBE	TAPON

SERVOFRENO PER VETT. G.D.
SERVO-FREIN VOIT. D.A.D.
BRAKE BOOSTER FOR R.H.D. CARS
BREMSVERSTAERKER ZYLINDER F. RL
SERVOFRENO PARA AUTOMOV. G.D.

ATE

TAV. 21.40

1°	EDIZIONE	APRILE	1974
1ère	EDITION	AVRIL	
1st	EDITION	APRIL	
1.	AUSGABE	APRIL	
1ª	EDICION	ABRIL	

11609.45020.01

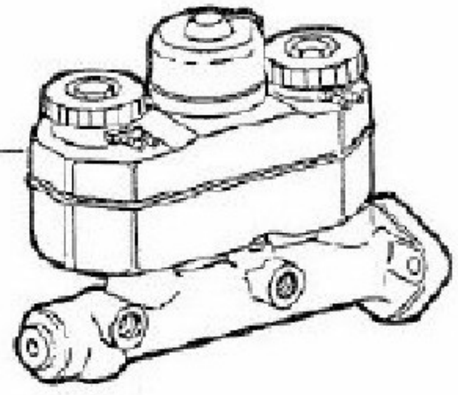

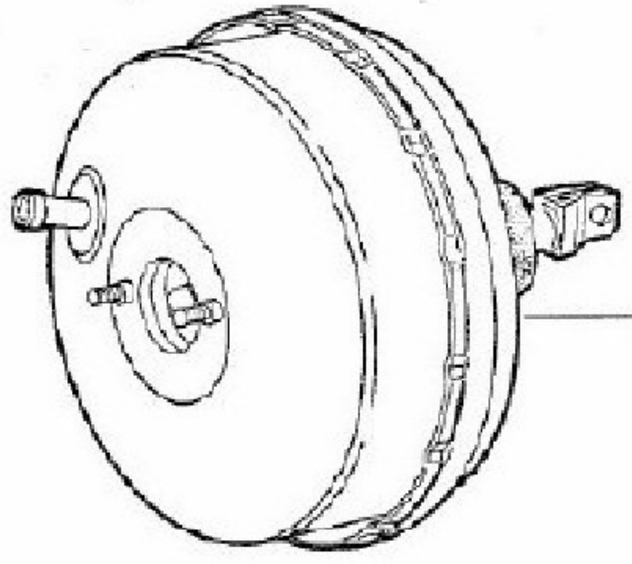

11610.45021.01

11609.45022.01

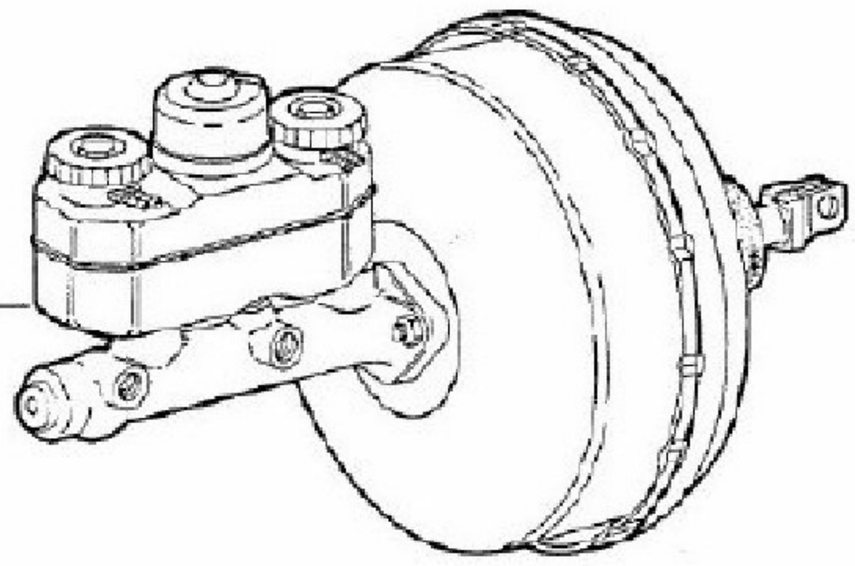

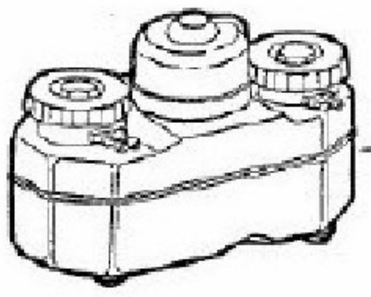

10612.45050.00

Alfetta GT

TAV. 21.40/0

SERVOFRENO PER VETT. G.D.- ATE
SERVO-FREIN VOIT. D.A D.
BRAKE BOOSTER FOR R.H.D. CARS
BREMSVERSTAERKER ZYLINDER F.RL
SERVOFRENO PARA AUTOMOV.G.D.

MODIFICA	N. ORDINAZIONE	QT.	DENOMINAZIONE	DESIGNATION	DESCRIPTION	BENENNUNG	DENOMINACIONES
	10512.45050.00	1	SERBATOIO OLIO	RESERVOIR	TANK	BEHAELTER	DEPOSITO
	11609.45020.01	1	POMPA CON SERBATOIO	MAITRE-CYLINDRE	MASTER CYLINDER	HAUPTBREMSZYLINDER	BOMBA DE FRENOS
	11609.45022.01	1	SERVOFRENO POMPA	MAITRE CYLIND.-SERVO	CYLINDER-BOOSTER UNI	BREMSVERST. EINHEIT	SERVOFRENO-BOMBA
	11610.45021.01	1	SERVOFRENO	SERVO-FREIN	BRAKESERVO	BREMSVERSTAERKER	SERVOFRENO

SERVOFRENO PER VETT. G.D.
SERVO-FREIN VÖT. D.A D.
BRAKE BOOSTER FOR R.H.D. CARS
BREMSVERSTAERKER ZYLINDER F.RL
SERVOFRENO PARA AUTOMOV G.D.

BENDITALIA

TAV. 21.41

1ª	EDIZIONE	1974	APRILE
1st	EDITION		AVRIL
1st	EDITION		APRIL
1.	AUSGABE		APRIL
1ª	EDICION		ABRIL

DATA ULTIMI AGGIORNAMENTI

11609.45020.03



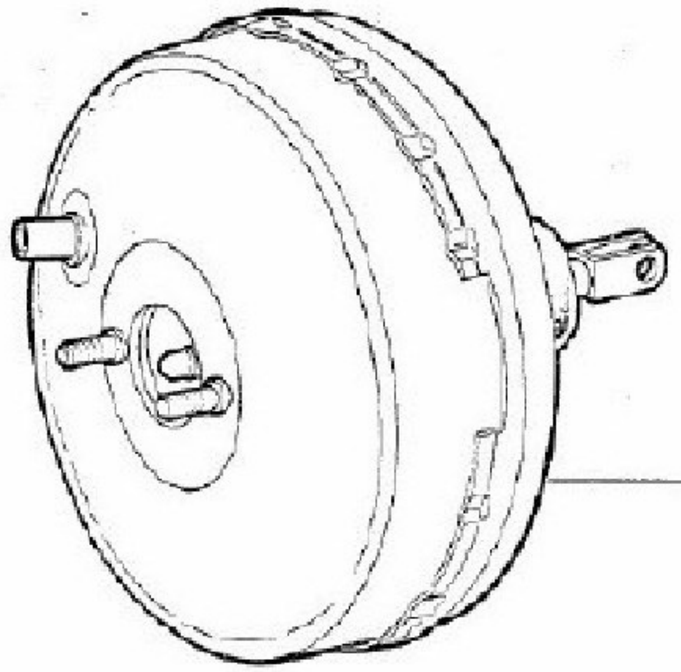

11610.45021.00

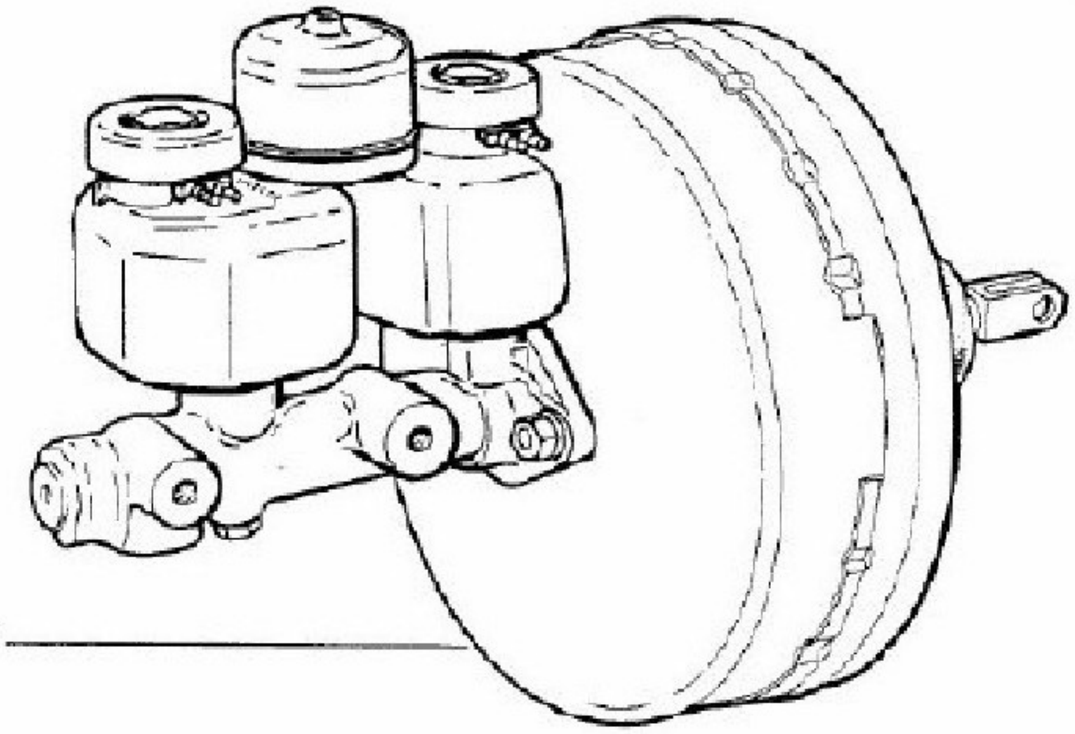

11609.45022.00

10548.45050.01

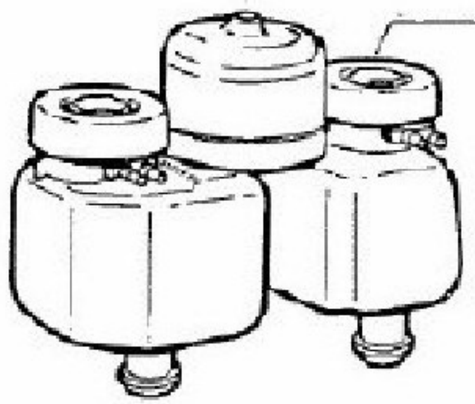

TAV. 21.41/0

SERVOFRENO PER VETT. G.D.- BENDITALIA
SERVO-FREIN VOT. D.A D.
BRAKE BOOSTER FOR R.H.D. CARS
BREMSVERSTAERKER ZYLINDER F.RL
SERVOFRENO PARA AUTOMOV G.D.

MODIFICA	N. ORDINAZIONE	QT.	DENOMINAZIONE	BESIGNATION	DESCRIPTION	BENENNUNG	DENOMINACION
	10548.45050.01	1	SERBATOIO OLIO	RESERVOIR	TANK	BEHAELTER	DEPOSITO
	11609.45020.03	1	POMPA CON SERBATOIO	MAITRE-CYLINDRE	MASTER CYLINDER	HAUPTBREMSZYLINDER	BOMBA DE FRENOS
	11609.45022.00	1	SERVOFRENO POMPA	MAITRE CYLIND.-SERVO	CYLINDER-BOOSTER UNI	BREMSVERST. EINHEIT	SERVOFRENO-BOMBA
	11610.45021.00	1	SERVOFRENO	SERVO-FREIN	BRAKESERVO	BREMSVERSTAERKER	SERVOFRENO

DISCHI E PARATIE PER FRENI ANTERIORI
DISQUES ET DEFLECTEURS DE FREINS AVANT
DISCS AND SHIELDS FOR FRONT BRAKES
BREMSSCHEIBEN UND SCHUTZBLECHE FÜR VORDERRADBREMSE
DISCOS Y DEFLECTORES PARA FRENOS ANTERIORES

TAV. 21.50

1	EDIZIONE	1974	APRILE
	EDITION		AVRIL
	EDITION		APRIL
	AUSGABE		APRIL
	EDICION		ABRIL

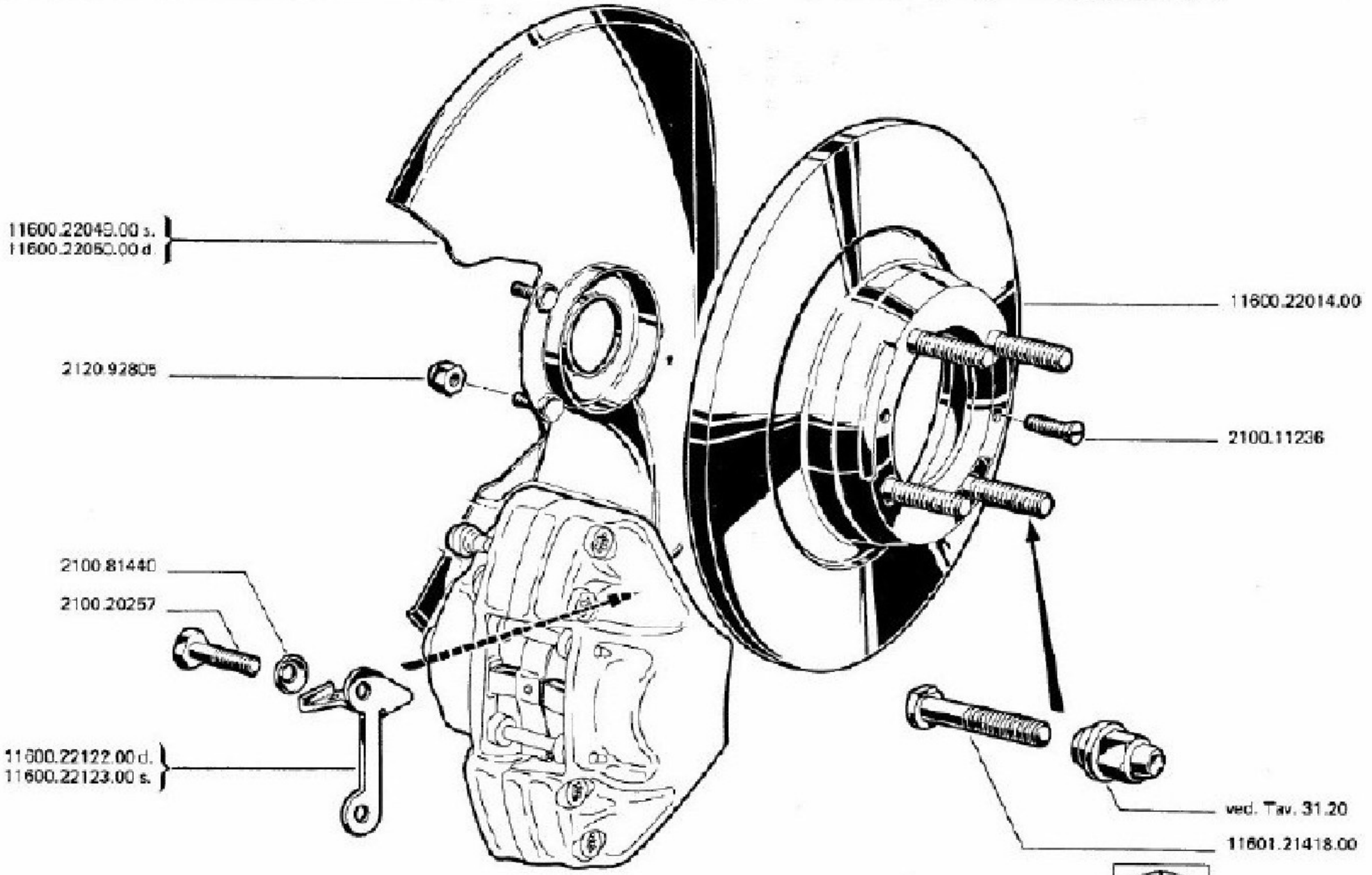

N. 6464

Alfetta GT

TAV. 21.50/0

DISCHI E PARATIE PER FRENI ANTERIORI
DISQUES ET DEFLECTEURS DE FREINS AVANT
DISCS AND SHIELDS FOR FRONT BRAKES
BREMSSCHEIBEN UND SCHUTZBLECHE FUR VORDERRADBREMSE
DISCOS Y DEFLECTORES PARA FRENOS ANTERIORES

MODIFICA	N. CRONACCIONE	QT.	DENOMINAZIONE	DESIGNATION	DESCRIPTION	BENENNUNG	DENOMINACIONES
	2100.11236	4	VITE	VIS	SCREW	SCHRAUBE	TORNILLO
	2100.20257	4	VITE	VIS	SCREW	SCHRAUBE	TORNILLO
	2100.81440	4	RONDELLA	RONDELLE	WASHER	SCHEIBE	ARANDELLA
	2120.92805	6	DADO	ECROU	NUT	MUTTER	TUERCA
	11600.22014.00	2	DISCO FRENI	DISQUE DE FREIN	BRAKE DISC	BREMSSCHEIBE	DISCO FRENOS
	11600.22049.00	1	PARATIA S.	CLOISON	BULKEAD	TRENNWAND	SEPARADOR
	11600.22050.00	1	PARATIA D.	CLOISON	BULKEAD	TRENNWAND	SEPARADOR
	11600.22122.00	1	STAFFA PER FLESS.D.	ETRIER-SUPPORT	BRACKET	HALTERBUEGEL	ESTRIBO
	11600.22123.00	1	STAFFA PER FLESS.S.	ETRIER-SUPPORT	BRACKET	HALTERBUEGEL	ESTRIBO
	11601.21418.00	8	VITE	VIS	SCREW	SCHRAUBE	TORNILLO

PINZA PER FRENI ANTERIORI
ETRIER DE FREINS AVANT
CALIPER FOR FRONT BRAKES
FESTSATTEL FÜR VORDERRADBREMSE
PINZA PARA FRENOS ANTERIORES

ATE

TAV. 21.51

1°	EDIZIONE	APRILE	1974
1ère	EDITION	AVRIL	
1st	EDITION	APRIL	
1.	AUSGABE	APRIL	
1ª	EDICION	ABRIL	

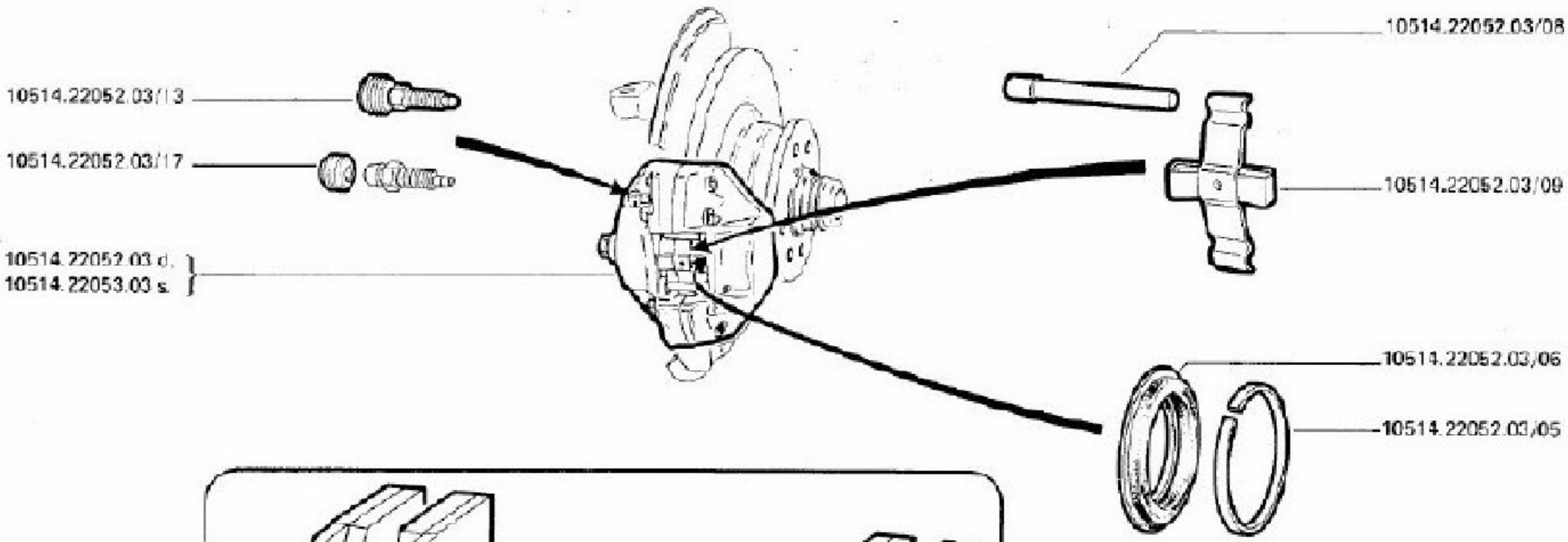

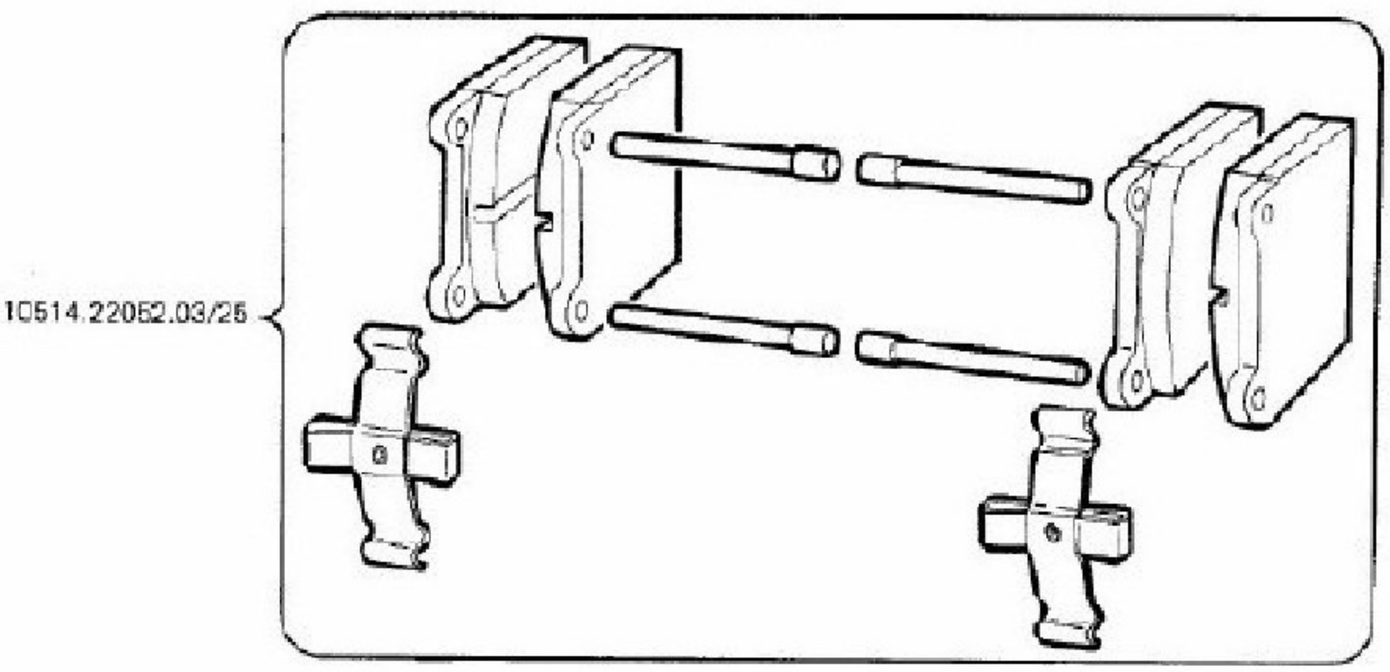

TAV. 21.51/0 PINZA PER FRENI ANTERIORI-ATE
ETRIER DE FREINS AVANT
CALIPER FOR FRONT BRAKES
FESTSATTEL FUER VORDERRADBREMSE
PINZA PARA FRENOS ANTERIORES

MODIFICA	N. ORDINAZIONE	QT.	DENOMINAZIONE	DESIGNATION	DESCRIPTION	BENENNUNG	DENOMINACIONES
	10514.22052.03	1	PINZA D. COMPL.	ETRIER DE FREIN	CALIPER	FESTSATTEL	PINZA
	10514.22052.03/05	4	ANELLO DI FERMO	ARRETOIR	LOCKRING	ANSCHLAG	TOPE
	10514.22052.03/06	4	PROTEZIONE	PROTECTEUR	PROTECTION	SCHUTZ	PROTECCION
	10514.22052.03/08	4	PERNO	AXE	PIVOT PIN	ZAPFEN	PERNO
	10514.22052.03/09	2	CROCIERA ELASTICA	CROISILLON	TRUNNION	KREUZGELENK	CRUCERO
	10514.22052.03/13	2	VITE SPURGO	VIS DE PURGE	BLEEDER SCREW	ABLASSCHRAUBE	TORNILLO DE PURGA
	10514.22052.03/17	2	PARAPOLVERE	CACHE-POUSSIERE	DUST COVER	STAUBSCHUTZ	GUARDAPOLVO
	10514.22052.03/25	1	SERIE PATTINI	COLLECTION PATINS	SET OF FRICTION PADS	BREMSBELAGSATZ	SERIE PATINES
	10514.22053.03	1	PINZA S. COMPL.	ETRIER DE FREIN	CALIPER	FESTSATTEL	PINZA

DISCHI E PARATIE PER FRENI POSTERIORI
DISQUES ET DEFLECTEURS DE FREINS ARRIERE
DISCS AND SHIELDS FOR REAR BRAKES
BREMSSCHEIBEN UND SCHUTZBLECHE FÜR HINTERRADBREMSE
DISCOS Y DEFLECTORES PARA FRENOS POSTERIORES

TAV. 21.60

1ª	EDIZIONE	APRILE	1974
1ère	EDITION	AVRIL	
1st	EDITION	APRIL	
-	AUSGABE	APRIL	
1ª	EDICION	ABRIL	

DATA ULTIMO AGGIORNAMENTO

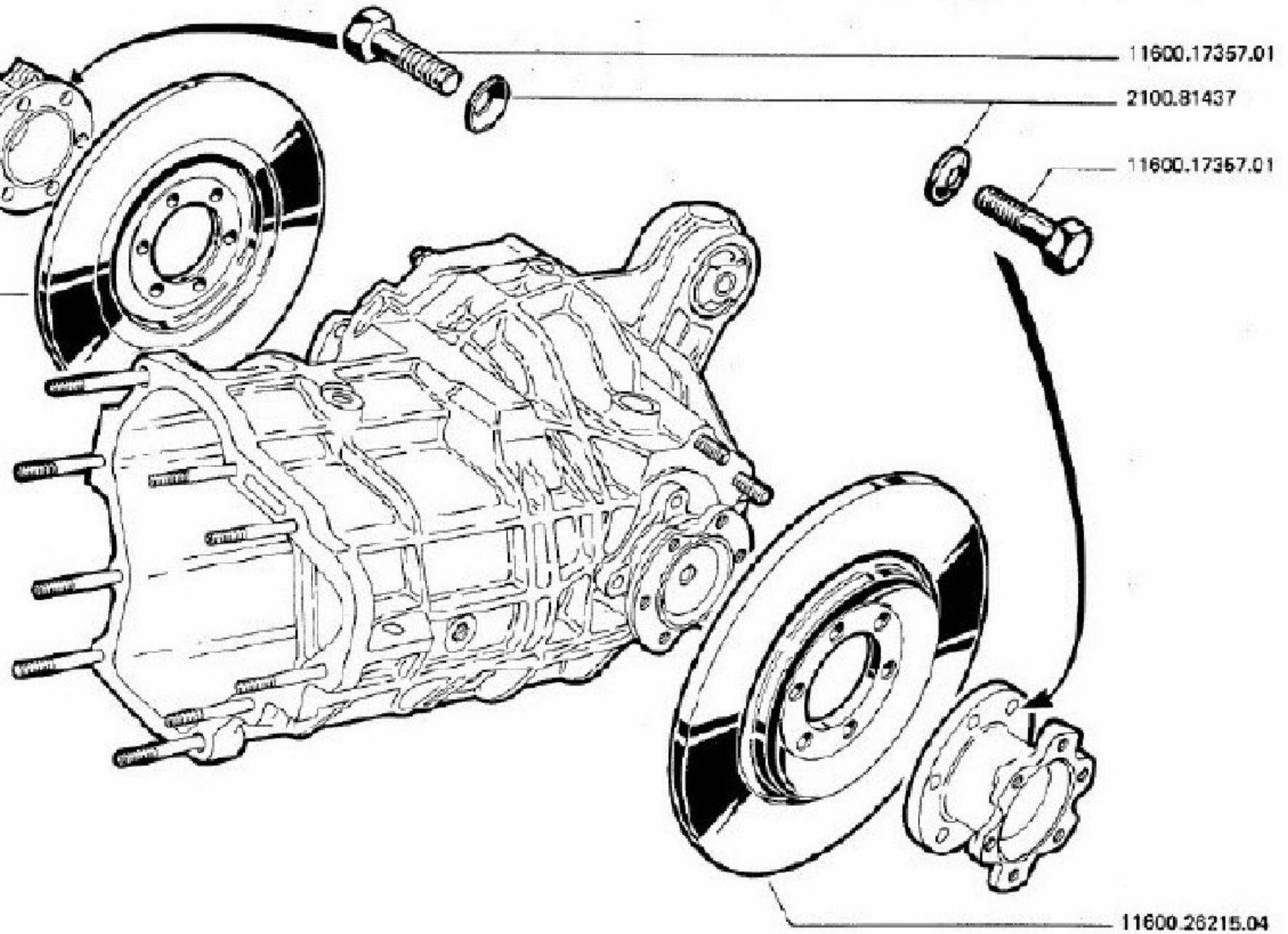

TAV. 21.60/0 DISCHI E PARATIE PER FRENI POSTERIORI
DISQUES ET DEFLECTEURS DE FREINS ARRIERE
DISCS AND SHIELDS FOR REAR BRAKES
BREMSSCHEIBEN UND SCHUTZBLECHE FUER HINTERRADBREMSE
DISCOS Y DEFLECTORES PARA FRENOS POSTERIORES

MODIFICA	N. ORDINAZIONE	QT.	DENOMINAZIONE	DESIGNATION	DESCRIPTION	BENENNUNG	DENOMINACIONES
	2100.81437	12	RONDELLA	RONDELLE	WASHER	SCHEIBE	ARANDELLA
	11600.17357.01	12	VITE	VIS	SCREW	SCHRAUBE	TORNILLO
	11600.26215.04	2	DISCO FRENI	DISQUE DE FREIN	BRAKE DISC	BREMSSCHEIBE	DISCO FRENOS

PINZA PER FRENI POSTERIORI
ETRIER DE FREINS ARRIERE
CALIPER FOR REAR BRAKES
FESTSATTEL FÜR HINTERRADBREMSE
PINZA PARA FRENOS POSTERIORES

ATE

TAV. 21.61

1	EDIZIONE	1974	APRILE
	EDITION		AVRIL
	EDITION		APRIL
	AUSGABE		APRIL
	EDICION		ABRIL

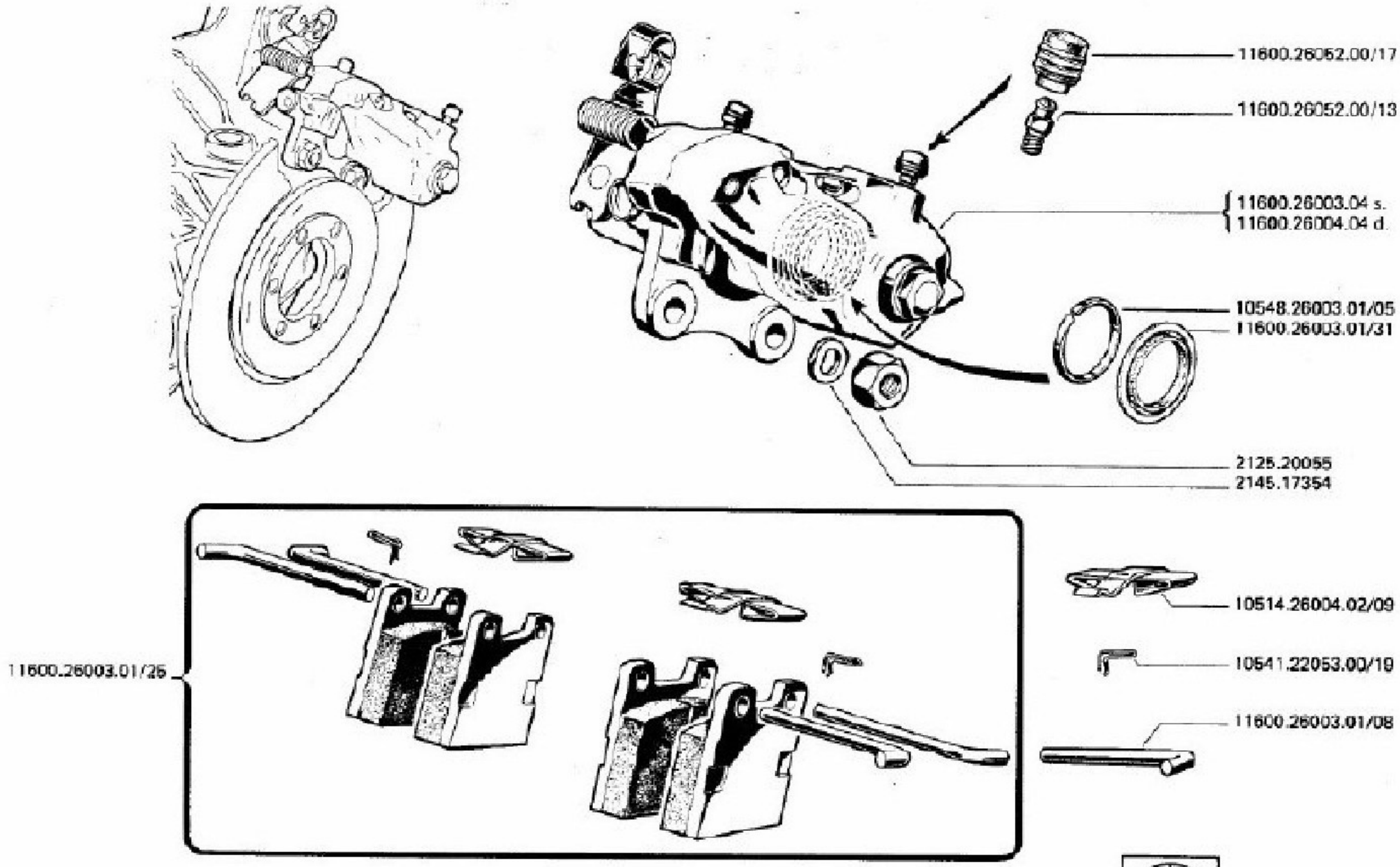

TAV. 21.61/0 PINZA PER FRENI POSTERIORI - ATE
ETRIER DE FREINS ARRIERE
CALIPER FOR REAR BRAKES
FESTSATTEL FUR HINTERRADBREMSE
PINZA PARA FRENOS POSTERIORES

MODIFICA	N. ORDINAZIONE	QT.	DENOMINAZIONE	DESIGNATION	DESCRIPTION	BENENNUNG	DENOMINACIONES
	2125.20055	4	DADO	ECROU	NUT	MUTTER	TUERCA
	2145.17354	4	RONDELLA	RONDELLE	WASHER	SCHEIBE	ARANDELLA
	10514.26004.02/09	2	CROCIERA ELASTICA	CROISILLON	TRUNNION	KREUZGELENK	CRUCERO
	10541.22053.00/19	4	MOLLETTA	AGRAFE	CLIP	KLEMMSTUECK	MUELLECITO
	10548.26003.01/05	4	ANELLO DI FERMO	ARRETOIR	LOCKRING	ANSCHLAG	TOPE
	11600.26003.01/08	4	PERNO	AXE	PIVOT PIN	ZAPFEN	PERNO
	11600.26003.01/25	1	SERIE PATTINI	COLLECTION PATINS	SET OF FRICTION PADS	BREMSBELAGSATZ	SERIE PATINES
	11600.26003.01/31	4	PROTEZIONE	PROTECTEUR	PROTECTION	SCHUTZ	PROTECCION
	11600.26003.04	1	PINZA S. COMPL.	ETRIER DE FREIN	CALIPER	FESTSATTEL	PINZA
	11600.26004.04	1	PINZA D. COMPL.	ETRIER DE FREIN	CALIPER	FESTSATTEL	PINZA
	11600.26052.00/13	4	VITE SPURGO	VIS DE PURGE	BLEEDER SCREW	ABLASSCHRAUBE	TORNILLO DE PURGA
	11600.26052.00/17	4	PARAPOLVERE	CACHE-POUSSIERE	DUST COVER	STAUBSCHUTZ	GUARDAPOLVO

LEVA COMANDO FRENO A MANO
LEVIER DE FREIN A MAIN
HANDBRAKE LEVER
STOCKHANDBREMSE
PALANCA MANDO FRENO DE MANO

TAV. 21.71

1ª	EDIZIONE	1974	APRILE	
1st	EDITION		APRIL	
1re	EDITION		APRIL	
1.	AUSGABE		APRIL	
1ª	EDICION		ABRIL	

DATA ULTIMO AGGIORNAMENTO

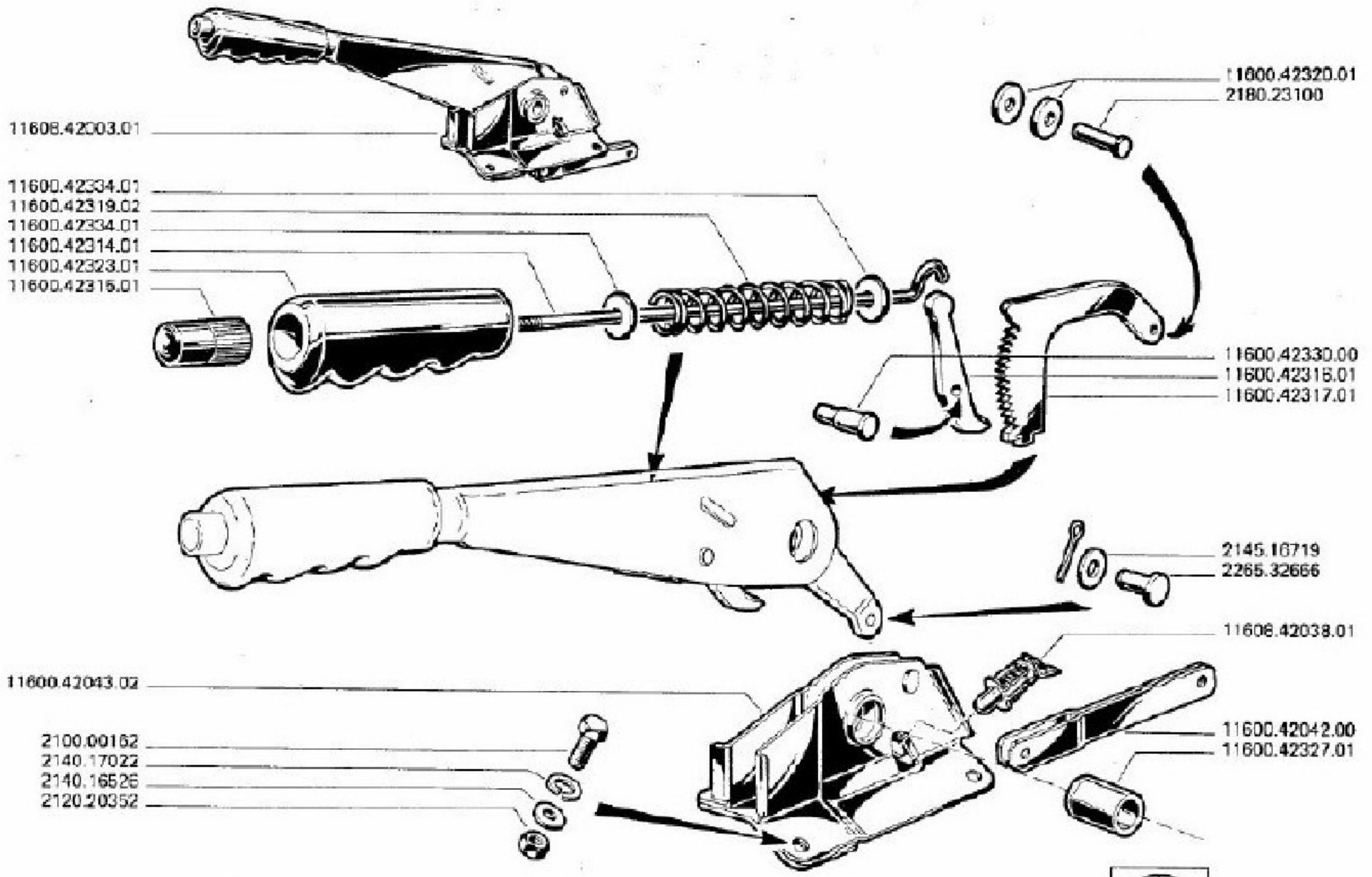

N. 0436

Alfetta GT

TAV. 21.71/0

LEVA COMANDO FRENO A MANO
LEVIER DE FREIN A MAIN
HANDBRAKE LEVER
STOCKHANDBREMSE
PALANCA MANDO FRENO DE MANO

MODIFICA	N. ORDINAZIONE	QT.	DENOMINAZIONE	DÉSIGNATION	DESCRIPTION	BENENNUNG	DENOMINACIONES
	2100.00162	4	VITE	VIS	SCREW	SCHRAUBE	TORNILLO
	2120.20352	4	DADO	ECROU	NUT	MUTTER	TUERCA
	2140.16526	4	RONDELLA	RONDELLE	WASHER	SCHEIBE	ARANDELLA
	2140.17022	4	RONDELLA	RONDELLE	WASHER	SCHEIBE	ARANDELLA
	2145.16719	1	RONDELLA	RONDELLE	WASHER	SCHEIBE	ARANDELLA
	2180.23100	1	RIBATTINO	RIVET	RIVET	NIET	REMACHE
	2265.32666	1	PERNETTO	AXE	PIN	ZAEPFCHEN	PASADOR
	11600.42042.00	1	TIRANTE	BIELLETTE	ROD	ZUGSTANGE	TIRANTE
	11600.42043.02	1	SUPPORTO	SUPPORT	SUPPORT	LAGERUNG	SOPORTE
	11600.42316.01	1	ASTINA	TIGE	ROD	STANGE	ASTA
	11600.42315.01	1	PULSANTE	BOUTON-POUSSOIR	PUSH BUTTON	DRUCKKNOPF	PULSANTE
	11600.42316.01	1	SALTARELLO	DENT	LUG	KLAUE	DIENTE
	11600.42317.01	1	SETTORE DENTATO	SECTEUR DENTE ARRET	KNOTCHED LOCKING QUA	FESTSTELLSEGMENT	SECTOR DE MANIOBRA
	11600.42319.02	1	MOLLA	RESSORT	SPRING	FEDER	MUELLE
	11600.42320.01	2	DISTANZIALE	ENTRETOISE	SPACER	ABSTANDSTUECK	SEPARADOR
	11600.42323.01	1	IMPUGNATURA	POIGNEE	HANDLE	GRIFF	EMPUNADURA
	11600.42327.01	1	PERNO	AXE	PIVOT PIN	ZAPFEN	PERNO
	11600.42330.00	1	PERNETTO	AXE	PIN	ZAEPFCHEN	PASADOR
	11600.42334.01	2	RONDELLA	RONDELLE	WASHER	SCHEIBE	ARANDELLA
	11608.42003.01	1	LEVA COMPLETA	LEVIER	LEVER	HEBEL	PALANCA
	11608.42038.01	1	INTERRUTTORE	INTERRUPTEUR	SWITCH	SCHALTER	INTERRUPTOR

CAVI COMANDO FRENO A MANO
CABLES DE COMMANDE DU FREIN A MAIN
HANDBRAKE CABLES
HANDBREMSEILZUG
CABLES MANDO FRENO DE MANO

TAV. 21.72

1ª	EDIZIONE	1974	APRILE
1st	EDITION		AVRIL
1st	EDITION		APRIL
1.	AUSGABE		APRIL
1ª	EDICIÓN		ABRIL

DATA REVISIONE / REVISION DATE / REVISIONSDATUM / FECHA REVISIÓN

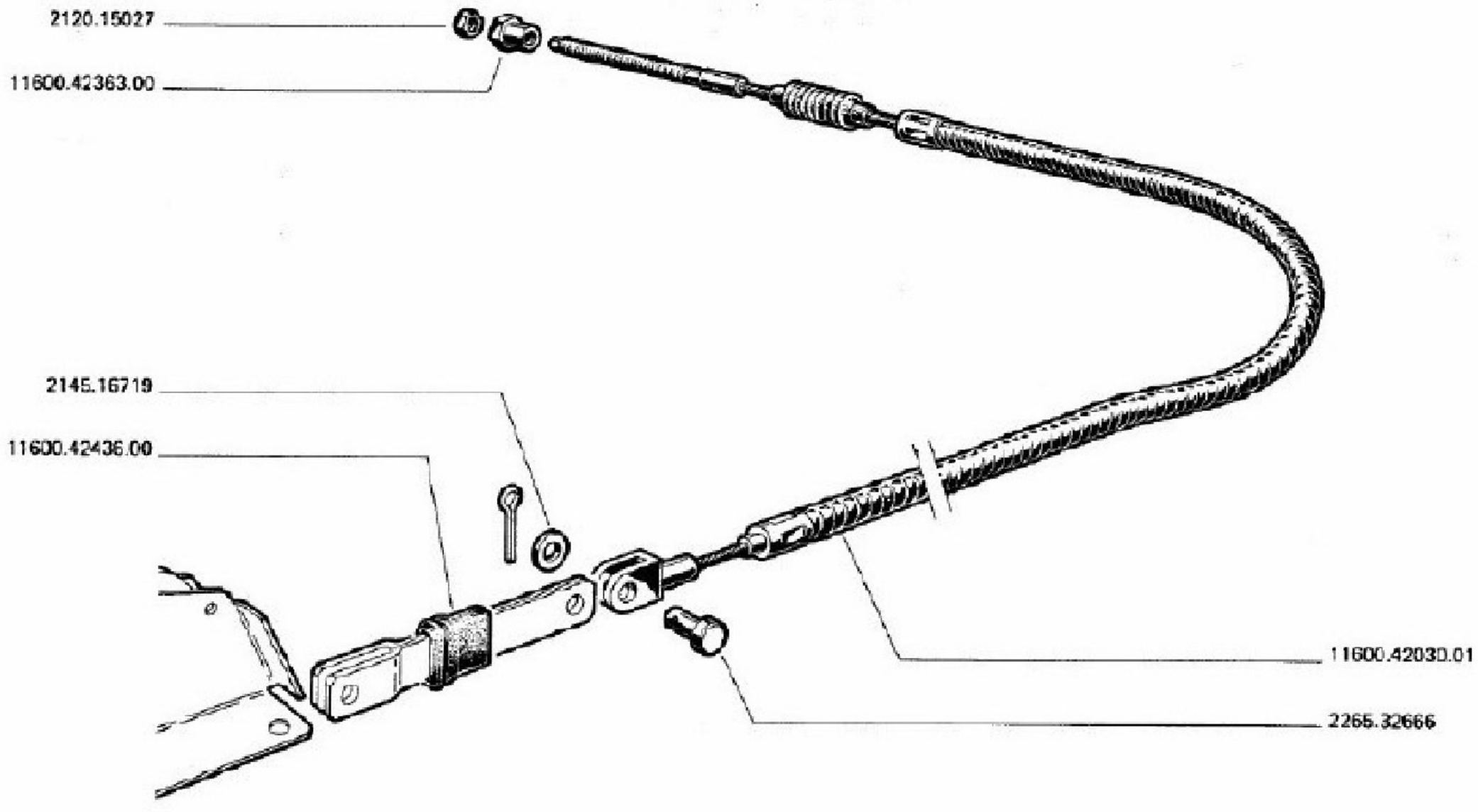

TAV. 21.72/0

CAVI COMANDO FRENO A MANO
CABLES DE COMMANDE DU FREIN A MAIN
HANDBRAKE CABLES
HANDBREMSEILZUG
CABLES MANDO FRENO DE MANO

MODIFICA	N. ORDINAZIONE	QT.	DENOMINAZIONE	DÉSIGNATION	DESCRIPTION	BENENNUNG	DENOMINACIONES
	2120.15027	1	DADO	ECROU	NUT	MUTTER	TUERCA
	2145.16719	1	RONDELLA	RONDELLE	WASHER	SCHEIBE	ARANDELLA
	2265.32666	1	PERNETTO	AXE	PIN	ZAEPFCHEN	PASADOR
	11600.42030.01	1	FLESSIBILE	CABLE	WIRE	ZUGDRAHT	BOWDEN
	11600.42363.00	1	DADO	ECROU	NUT	MUTTER	TUERCA
	11600.42436.00	1	TAPPO	BOUCHON	PLUG	VERSCHLUSSCHRAUBE	TAPON

PEDALI COMANDO FRENI E FRIZIONE (per vetture g. s.)
PEDALES DE FREIN ET EMBRAYAGE (voitures direction à gauche)
BRAKE AND CLUTCH PEDALS (for L.H.D. cars)
FUSSHEBELWERK (F.LL.)
PEDALES MANDO FRENOS Y EMBRAGUE (para automov. g. izq.)

TAV. 21.81

1ª EDIZIONE APRILE 1974
1ère EDITION AVRIL
1st EDITION APRIL
1. AUSGABE APRIL
1ª EDICION ABRIL

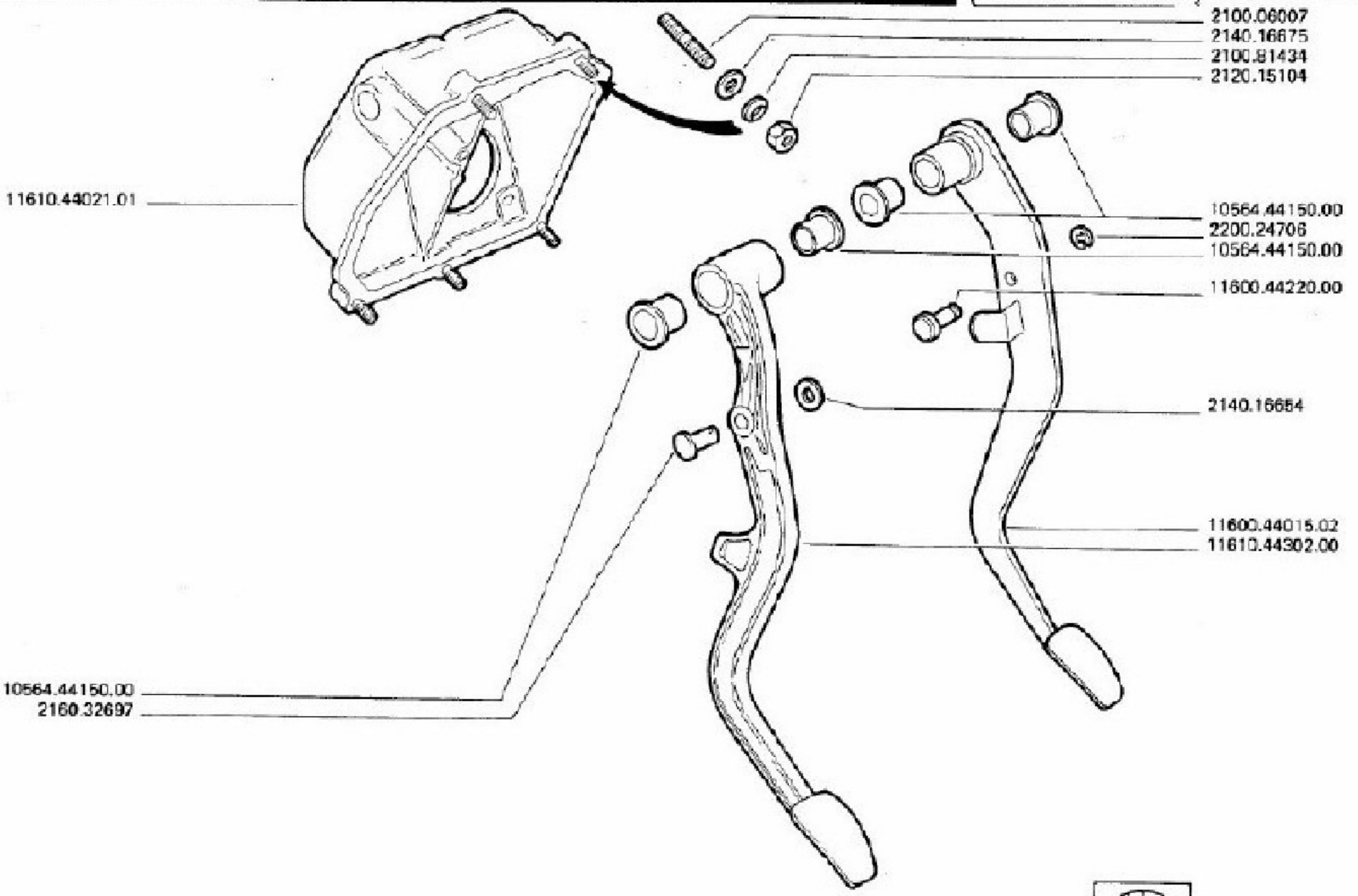

TAV. 21.81/0

PEDALI COMANDO FRENI E FRIZIONE PER VETT. G. S.
PEDALES DE FREIN ET EMBRAYAGE VOIT.O.A G.
BRAKE AND CLUTCH PEDALS FOR L.H.D.CARS
FUSSNEBELWERK F.LL
PEDALES MANDO FRENOS Y EMBRAGUE PARA AUTOMOV.G.IZQ.

MODIFICA	N. ORDINAZIONE	QT.	DENOMINAZIONE	DÉSIGNATION	DESCRIPTION	BENENNUNG	DENOMINACIONES
	2100.06007	5	PRIGIONIERO	GOUJON	STUD	STIFTSCHRAUBE	PRISIONERO
	2100.81434	5	RONDELLA	RONDELLE	WASHER	SCHEIBE	ARANDELLA
	2120.15104	5	DADO	ECROU	NUT	MUTTER	TUERCA
	2140.16654	1	RONDELLA	RONDELLE	WASHER	SCHEIBE	ARANDELLA
	2140.16675	5	RONDELLA	RONDELLE	WASHER	SCHEIBE	ARANDELLA
	2160.32697	1	PERNO	AXE	PIVOT PIN	ZAPFEN	PERNO
	2200.24706	1	ANELLO ELASTICO	JONC DE RETENUE	RETAINER RING	SPRENGRING	ANILLO ELASTICO
	10564.44150.00	4	BOCCOLA	BAGUE	BUSHING	BUECHSE	CASQUILLO
	11600.44015.02	1	PEDALE FRENO	PEDALE DE FREIN	BRAKE PEDAL	BREMSPEDAL	PEDAL DE FRENO
	11600.44220.00	1	PERNO	AXE	PIVOT PIN	ZAPFEN	PERNO
	11610.44021.01	1	SUPPORTO	SUPPORT	SUPPORT	LAGERUNG	SOPORTE
	11610.44302.00	1	PEDALE FRIZIONE	PEDALE D EMBRAYAGE	CLUTCH PEDAL	KUPPLUNGSPEDAL	PEDAL DE EMBRAGUE

PARTICOLARI COMANDO FRENI E FRIZIONE (per vetture g. s.)
DETAIL DE LA COMMANDE DE FREIN ET EMBRAYAGE (voitures direction à gauche)
BRAKE AND CLUTCH PEDAL HARDWARE (for L.H.D. cars)
EINZELTEILE DER BREMS U. KUPPLUNGSBETÄTIGUNG (F.LL)
PIEZAS MANDO FRENOS Y EMBRAGUE (para automov. g. izq.)

TAV. 21.82

1ª	EDIZIONE	1974	APRILE	
1ª	EDITION		AVRIL	
1st	EDITION		APRIL	
1.	AUSGABE		APRIL	
1ª	EDICION		ABRIL	

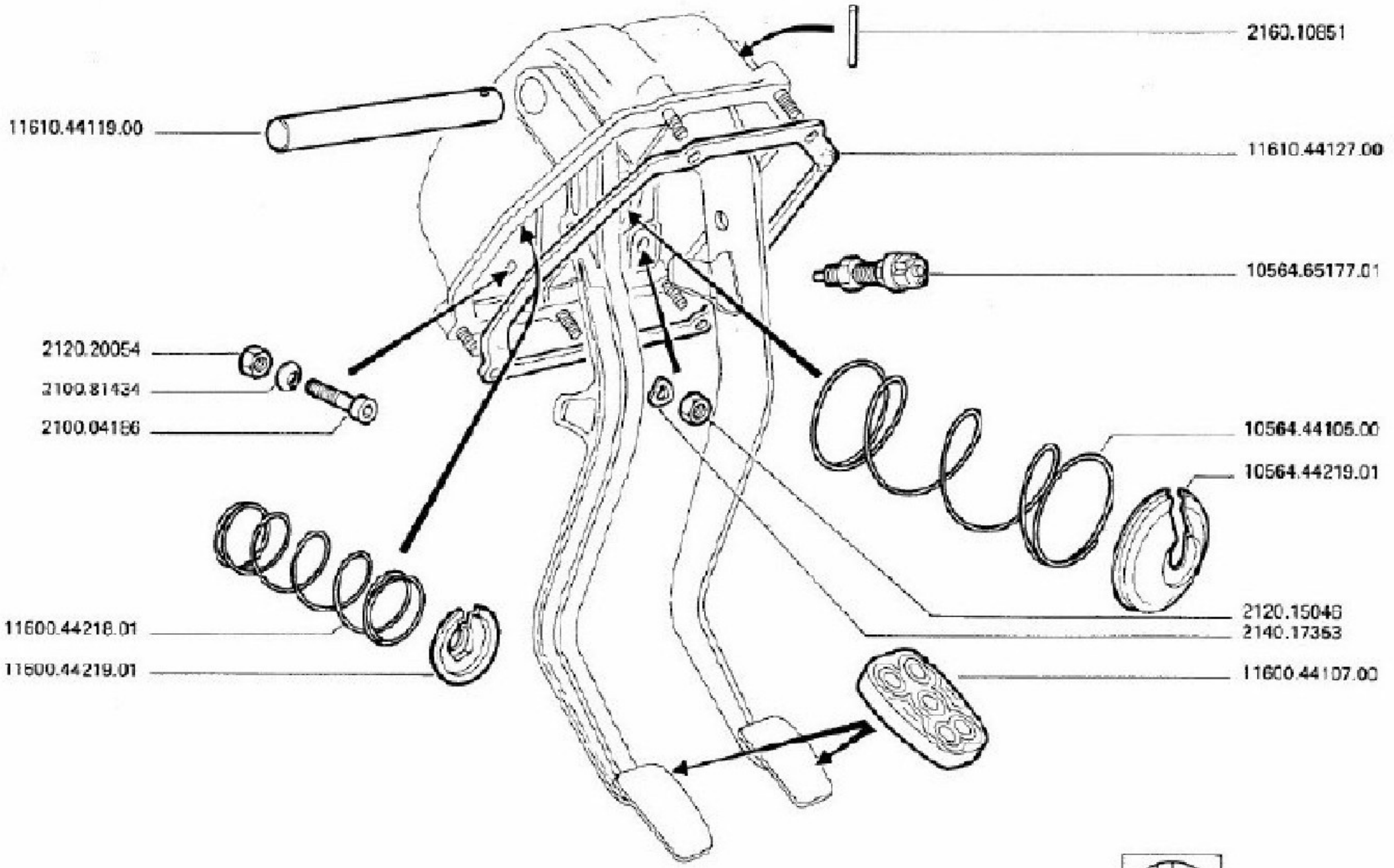

TAV. 21.8270

PARTICOLARI COMANDO FRENI E FRIZIONE PER VETT. G.S.
DETAIL DE LA COMMANDE DE FREIN ET EMBRAYAGE VOIT. D. A G.
BRAKE AND CLUTCH PEDAL HARDWARE FOR L.H.D.CARS
EINZELTEILE DER BREMS U. KUPPLUNGSBETATIGUNG F.LL
PIEZAS MANDO FRENOS Y EMBRAGUE PARA AUTOMOV. G. IZQ.

MODIFICA	N. CODIFICAZIONE	QT.	DENOMINAZIONE	DÉSIGNATION	DESCRIPTION	BEZEICHNUNG	DENOMINACIONES
	2100.04186	2	VITE	VIS	SCREW	SCHRAUBE	TORNILLO
	2100.81434	2	RONDELLA	RONDELLE	WASHER	SCHEIBE	ARANDELLA
	2120.15046	4	DADO	ECROU	NUT	MUTTER	TUERCA
	2120.20054	2	DADO	ECROU	NUT	MUTTER	TUERCA
	2140.17353	4	RONDELLA	RONDELLE	WASHER	SCHEIBE	ARANDELLA
	2160.10851	1	SPINA	BROCHE	PIN	STIFT	ESPINA
	10564.44105.00	1	MOLLA PEDALE FRENO	RESSORT D ARRET	STOP SPRING	SPERRFEDER	RESORTE DE PARADA
	10564.44219.01	1	SCODELLINO	COUPELLE	CUP	TELLER	CAZOLETA
	10564.65177.01	1	INTERRUTTORE STOP	INTERRUPTEUR	SWITCH	SCHALTER	INTERRUPTOR
	11600.44107.00	2	COPRIPEDALE	COUVRE-PEDALES	PEDAL COVER	PEDALBELAG	CUBREPEDAL
	11600.44213.01	1	MOLLA PEDALE FRIZION	RESSOR D EMBRAYAGE	CLUTCH SPRING	KUPPLUNGSDRUCKFEDER	MUELLE DEL EMBRAGUE
	11600.44219.01	1	SCODELLINO	COUPELLE	CUP	TELLER	CAZOLETA
	11610.44119.00	1	PERNO	AXE	PIVOT PIN	ZAPFEN	PERNO
	11610.44127.00	1	GUARNIZIONE	JOINT	GASKET	DICHTUNG	JUNTA

PEDALI COMANDO FRENI E FRIZIONE PER VETT. G.D.
PEDALES DE FREIN ET EMBRAYAGE VOIT. D. A D.
BRAKE AND CLUTCH PEDALS FOR R.H.D. CARS
FUSSHEBELWERK F.RL
PEDALES MANDO FRENOS Y EMBRAGUE PARA AUTOMOV. G.D.

TAV. 21.83

1°	EDIZIONE	APRILE	1974
1ère	EDITION	APRIL	
1st	EDITION	APRIL	
1.	AUSGABE	APRIL	
1ª	EDICION	ABRIL	

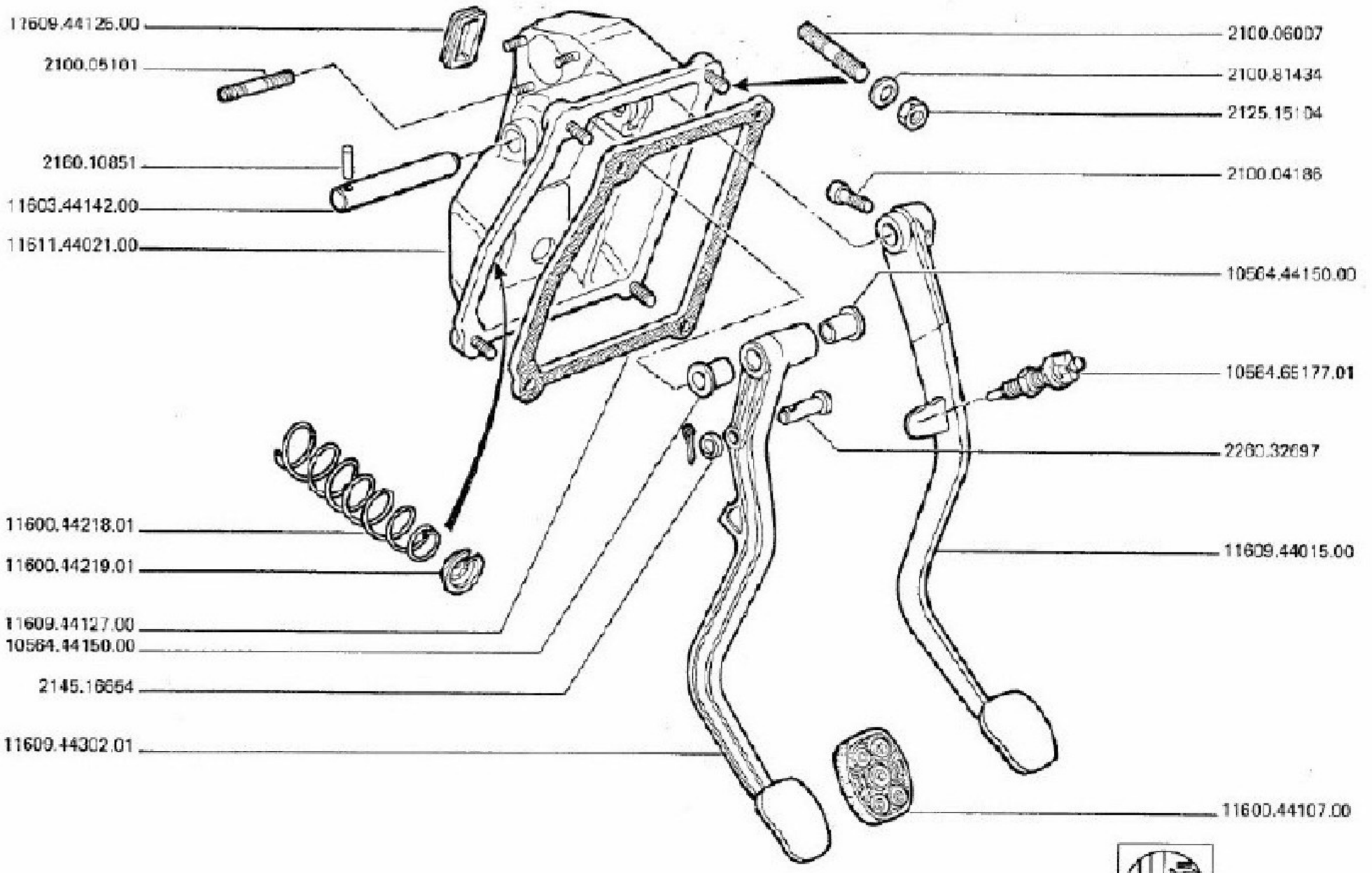

Alfetta Gt

TAV. 21.83/0

PEDALI COMANDO FRENI E FRIZIONE PER VETT.G.D.
PEDALES DE FREIN ET EMBRAYAGE VOIT.D. A D.
BRAKE AND CLUTCH PEDALS FOR R.H.D.CARS
FUSSHEBELWERK F.RL
PEDALES MANDO FRENOS Y EMBRAGUE PARA AUTOMOV. G.D.

MODIFICA	N. ORDINAZIONE	QT.	DENOMINAZIONE	DESIGNATION	DESCRIPTION	BEZEICHNUNG	DENOMINACIONES
	2100.04186	1	VITE	VIS	SCREW	SCHRAUBE	TORNILLO
	2100.05101	3	PRIGIONIERO	GOUJON	STUD	STIFTSCHRAUBE	PRISIONERO
	2100.06007	4	PRIGIONIERO	GOUJON	STUD	STIFTSCHRAUBE	PRISIONERO
	2100.81434	4	RONDELLA	RONDELLE	WASHER	SCHEIBE	ARANDELLA
	2125.15104	4	DADO	ECROU	NUT	MUTTER	TUERCA
	2145.16654	1	RONDELLA	RONDELLE	WASHER	SCHEIBE	ARANDELLA
	2160.30851	1	SPINA	BROCHE	PIN	STIFT	ESPINA
	2260.32697	1	PERNO	AXE	PIVOT PIN	ZAPFEN	PERNO
	10564.44150.00	2	BOCCOLA	BAGUE	BUSHING	BUECHSE	CASQUILLO
	10564.65177.01	1	INTERRUTTORE STOP	INTERRUPTEUR	SWITCH	SCHALTER	INTERRUPTOR
	11600.44107.00	1	COPRIPEDALE	COUVRE-PEDALES	PEDAL COVER	PEDALBELAG	CUBREPEDAL
	11600.44218.01	1	MOLLA PEDALE FRIZION	RESSOR D EMBRAYAGE	CLUTCH SPRING	KUPPLUNGSDRUCKFEDER	MUELLE DEL EMBRAGUE
	11600.44219.01	1	SCODELLINO	COUPELLE	CUP	TELLER	CAZOLETA
	11603.44142.00	1	PERNO	AXE	PIVOT PIN	ZAPFEN	PERNO
	11609.44015.00	1	PEDALE FRENO	PEDALE DE FREIN	BRAKE PEDAL	BREMSPEDAL	PEDAL DE FRENO
	11609.44125.00	1	TAPPO	BOUCHON	PLUG	VERSCHLUSSCHRAUBE	TAPON
	11609.44127.00	1	GUARNIZIONE	JOINT	GASKET	DICHTUNG	JUNTA
	11609.44302.01	1	PEDALE FRIZIONE	PEDALE D EMBRAYAGE	CLUTCH PEDAL	KUPPLUNGSPEDAL	PEDAL DE EMBRAGUE
	11611.44021.00	1	SUPPORTO PEDALI	SUPPORT	SUPPORT	LAGERUNG	SOPORTE

PARTICOLARI COMANDO FRENI E FRIZIONE PER VETT. G.D.
DETAIL DE LA COMMANDE DE FREIN ET EMBRAYAGE VOIT. D.A.D.
BRAKE AND CLUTCH PEDAL HARDWARE FOR R.H.D. CARS
EINZELTEILE DER BREMS U. KUPPLUNGSBETATIGUNG F.R.L
PIEZAS MANDO FRENOS Y EMBRAGUE PARA AUTOMOV. G.D.

TAV. 21.84

1ª	EDIZIONE	1974	APRILE
2nd	EDITION		AVRIL
3rd	EDITION		APRIL
	AUSGABE		APRIL
4ta	EDICION		ABRIL

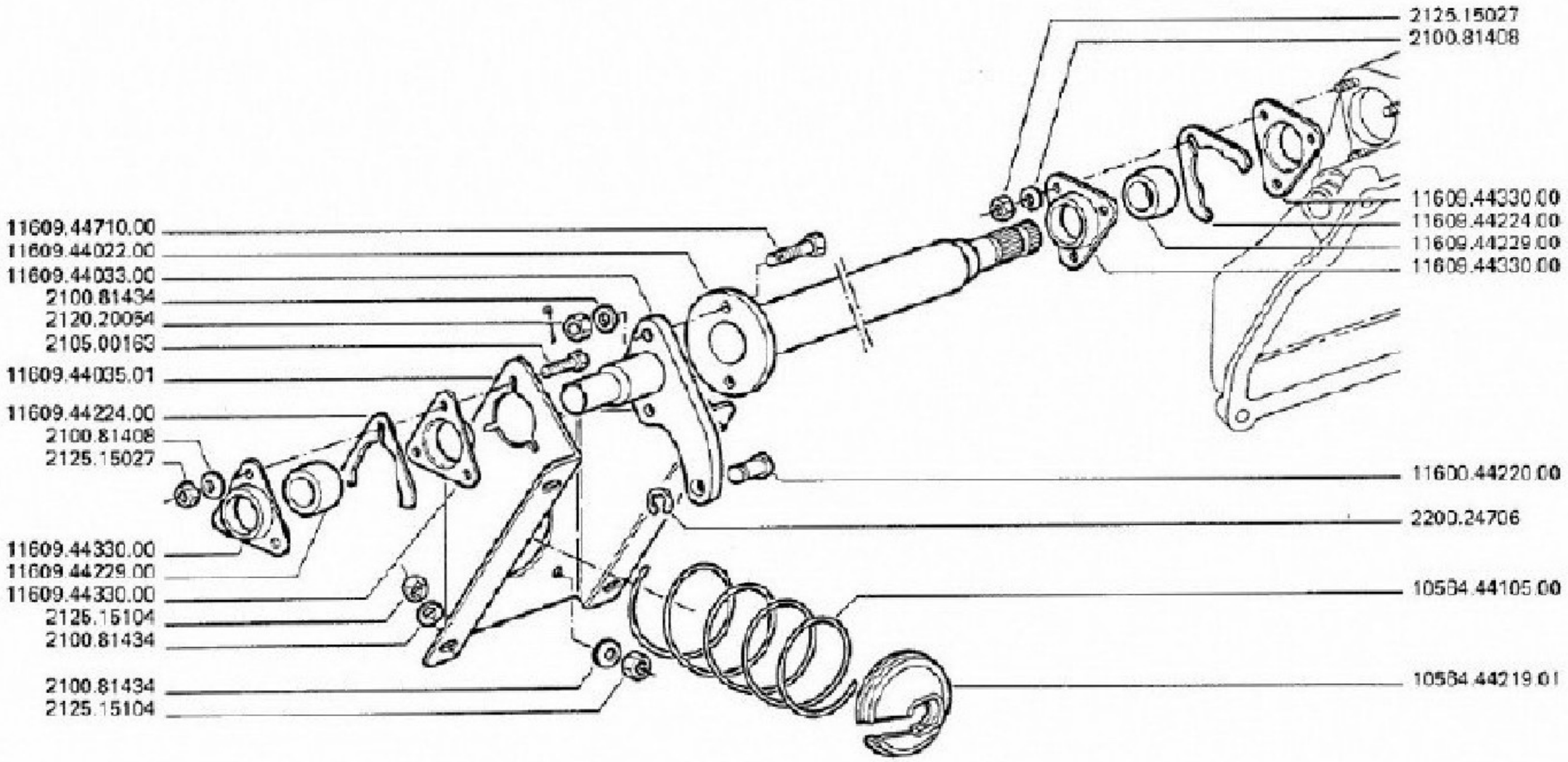

TAV. 21.84/0

PARTICOLARI COMANDO FRENI E FRIZIONE PER VETT. G.D.
DETAIL DE LA COMMANDE DE FREIN ET EMBRAYAGE VOIT. D.A D.
BRAKE AND CLUTCH PEDAL HARDWARE FOR R.H.D. CARS
EINZELTEILE DER BREMS U. KUPPLUNGSBETATIGUNG F.RL
PIEZAS MANDO FRENOS Y EMBRAGUE PARA AUTOMOV. G.D.

MODIFICA	N. ORDINAZIONE	QT.	DENOMINAZIONE	DESIGNATION	DESCRIPTION	BENENNUNG	DENOMINACIONES
	2100.81408	6	RONDELLA	RONDELLE	WASHER	SCHEIBE	ARANDELLA
	2100.81434	10	RONDELLA	RONDELLE	WASHER	SCHEIBE	ARANDELLA
	2105.00163	3	VITE	VIS	SCREW	SCHRAUBE	TORNILLO
	2120.20084	2	DADO	ECROU	NUT	MUTTER	TUERCA
	2125.15027	6	DADO	ECROU	NUT	MUTTER	TUERCA
	2125.15104	8	DADO	ECROU	NUT	MUTTER	TUERCA
	2200.24706	1	ANELLO ELASTICO	JONC DE RETENUE	RETAINER RING	SPRENGRING	ANILLO ELASTICO
	10564.44105.00	1	MOLLA PEDALE FRENO	RESSORT D ARRET	STOP SPRING	SPERRFEDER	RESORTE DE PARADA
	10564.44219.01	1	SCODELLINO	COUPELLE	CUP	TELLER	CAZOLETA
	11600.44220.00	1	PERNO	AXE	PIVOT PIN	ZAPFEN	PERNO
	11609.44022.00	1	ALBERO RINVIO	ARBRE	SHAFT	WELLE	ARBOL
	11609.44033.00	1	LEVA RINVIO	LEVIER	LEVER	HEBEL	PALANCA
	11609.44035.01	1	SUPPORTO SERVOFRENO	SUPPORT	SUPPORT	LAGERUNG	SOPORTE
	11609.44224.00	0	SPESSORE	CALE	SPACER	BEILAGE	ESPESOR
	11609.44229.00	2	SFERA	BILLE	BALL	KUGEL	ESFERA
	11609.44330.00	4	SUPPORTO	SUPPORT	SUPPORT	LAGERUNG	SOPORTE
	11609.44710.00	2	VITE	VIS	SCREW	SCHRAUBE	TORNILLO

MOZZI DELLE RUOTE ANTERIORI
MOYEUX DE ROUES AVANT
FRONT WHEEL HUBS
RADNABEN DER VORDERRÄDER
CUBOS DE LAS RUEDAS DELANTERAS

TAV. 31.00

1ª	EDIZIONE	1974	APRILE	DATA DELL'ULTIMO AGGIORNAMENTO
1ère	EDITION		AVRIL	
1st	EDITION		APRIL	
1.	AUSGABE		APRIL	
1ª	EDICION		ABRIL	

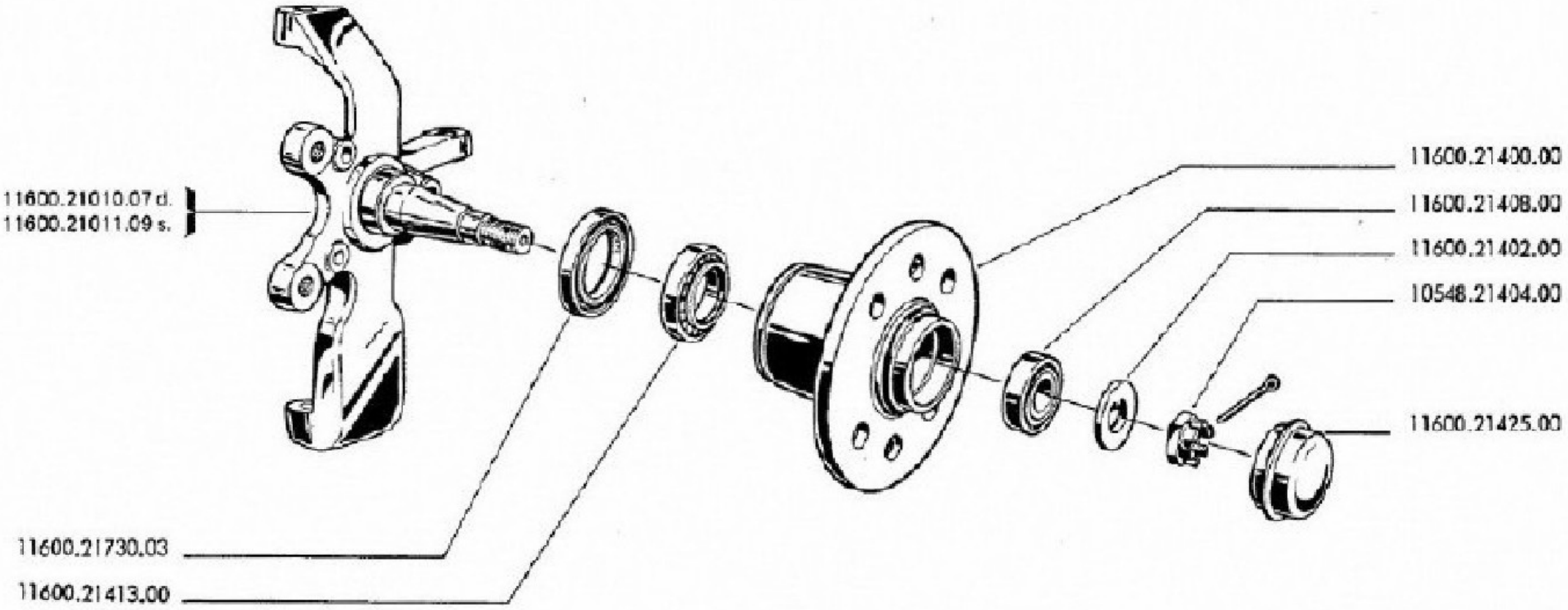

TAV. 31.00/0

MOZZI DELLE RUOTE ANTERIORI
MOYEUX DE ROUES AVANT
FRONT WHEEL HUBS
RADNABEN DER VORDERRADER
CUBOS DE LAS RUEDAS DELANTERAS

MODIFICA	N. ORDINAZIONE	QT.	DENOMINAZIONE	DESIGNATION	DESCRIPTION	BENENNUNG	DENOMINACIONES
	10548.21404.00	2	DADO	ECROU	NUT	MUTTER	TUERCA
	11600.21010.07	1	FUSO SNODO D.	FUSEE	STEERING KNUCKLE	ACHSSCHENKEL	MANGUETA
	11600.21011.09	1	FUSO SNODO S.	FUSEE	STEERING KNUCKLE	ACHSSCHENKEL	MANGUETA
	11600.21400.00	2	MOZZO DELLA RUOTA	MOYEU DE ROUE	WHEEL HUB	RADNABE	CUBO DE RUEDA
	11600.21402.00	2	RONDELLA	RONDELLE	WASHER	SCHEIBE	ARANDELLA
	11600.21408.00	2	CUSCINETTO ANT.	ROULEMENT	BEARING	LAGER	COJINETE
	11600.21413.00	2	CUSCINETTO POST.	ROULEMENT	BEARING	LAGER	COJINETE
	11600.21425.00	2	SCODELLINO	COUPELLE	CUP	TELLER	CAZOLETA
	11600.21738.03	2	ANELLO TENUTA	JOINT	SEAL	DICHTRING	JUNTA

LEVERAGGI DELLA SOSPENSIONE ANTERIORE
FUSEES, BRAS ET ARTICULATIONS DE SUSPENSION AVANT
FRONT SUSPENSION ARMS
HEBELN DER VORDERRADAUFHÄNGUNG
PALANQUETAS DE LA SUSPENSION ANTERIOR

TAV. 31.01

1	EDIZIONE	1974	APRILE	
	EDITION		AVRIL	
	EDITION		APRIL	
	AUSGABE		APRIL	
	EDICION		ABRIL	

11600.21257.00
11600.21286.00
11600.21289.00
2125.15526
11600.21287.00
11600.21288.02
11600.21263.02
11600.21256.00
11600.21038.01 d.
11600.21039.01 s.
2129.92856
2145.16678
11600.21327.00
11600.21323.01
11600.21342.00
2100.20254
2120.92865
11600.21020.04 d.
11600.21037.04 s.
11600.21258.00

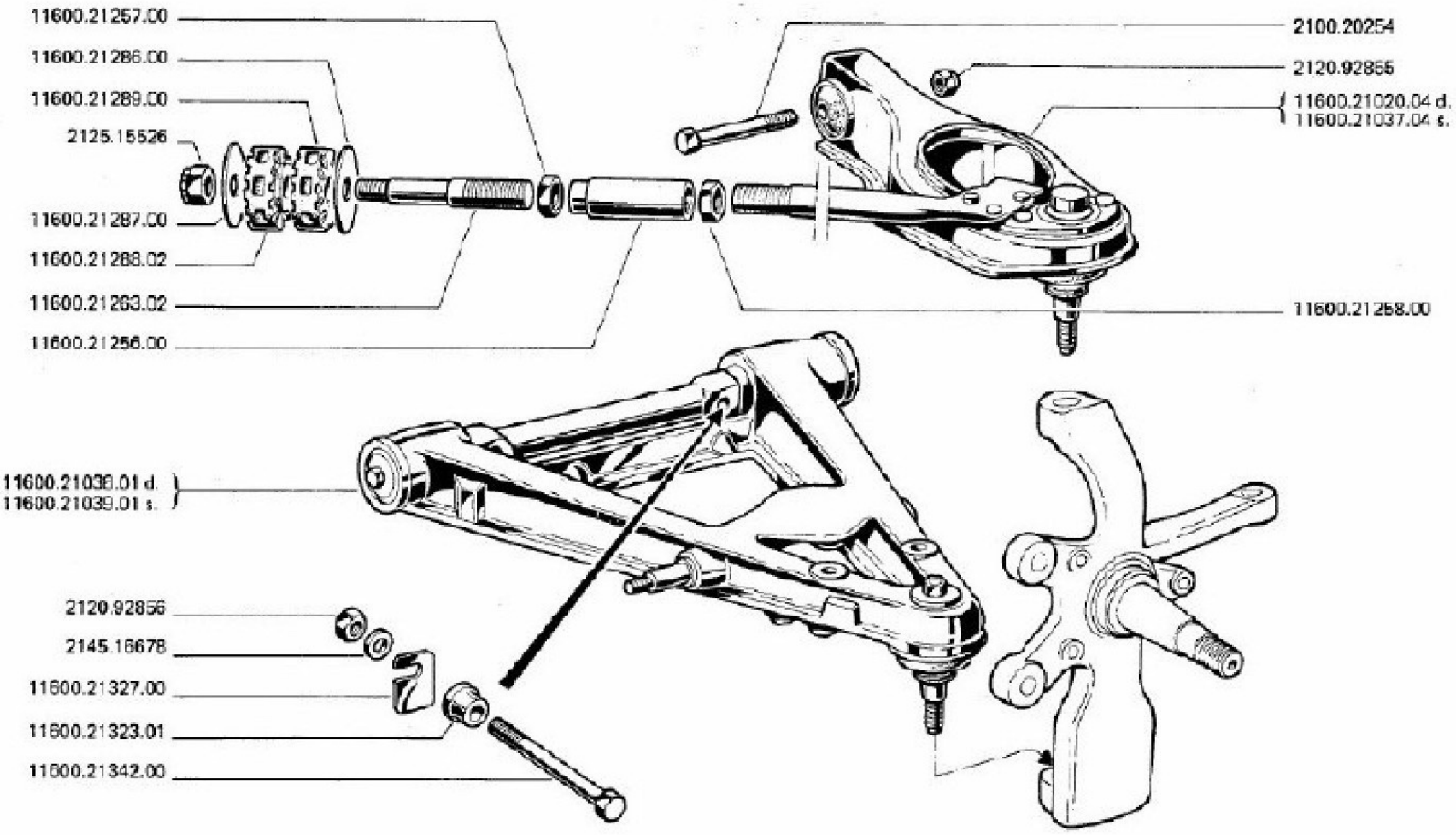

TAV. 31.01/0 LEVERAGGI DELLA SOSPENSIONE ANTERIORE
FUSEES, BRAS ET ARTICULATIONS DE SOSPENSION AVANT
FRONT SUSPENSION ARMS
HEBELN DER VORDERRADAUFHANGUNG
PALANQUETAS DE LA SUSPENSION ANTERIOR

MODIFICA	N. ORDINAZIONE	QT.	DENOMINAZIONE	BEZEICHNUNG	DESCRIPTION	BENENNUNG	DENOMINACIONES
	2100.20254	2	VITE	VIS	SCREW	SCHRAUBE	TORNILLO
	2120.92855	2	DADO	ECROU	NUT	MUTTER	TUERCA
	2120.92856	4	DADO	ECROU	NUT	MUTTER	TUERCA
	2125.15526	2	DADO	ECROU	NUT	MUTTER	TUERCA
	2145.16678	4	RONDELLA	RONDELLE	WASHER	SCHEIBE	ARANDELLA
	11600.21020.04	1	LEVA SUP. D.	LEVIER	LEVER	HEBEL	PALANCA
	11600.21037.04	1	LEVA SUP. S.	LEVIER	LEVER	HEBEL	PALANCA
	11600.21038.01	1	LEVA INF. D.	LEVIER	LEVER	HEBEL	PALANCA
	11600.21039.01	1	LEVA INF. S.	LEVIER	LEVER	HEBEL	PALANCA
	11600.21256.00	2	BOCCOLA	BAGUE	BUSHING	BUECHSE	CASQUILLO
	11600.21257.00	2	DADO S.	ECROU	NUT	MUTTER	TUERCA
	11600.21258.00	2	DADO D.	ECROU	NUT	MUTTER	TUERCA
	11600.21263.02	2	PERNO	AXE	PIVOT PIN	ZAPFEN	PERNO
	11600.21286.00	2	RONDELLA	RONDELLE	WASHER	SCHEIBE	ARANDELLA
	11600.21287.00	2	RONDELLA	RONDELLE	WASHER	SCHEIBE	ARANDELLA
	11600.21288.02	2	TAMPONE	BLOC CAOUTCHOUC	RUBBER PAD	PUFFER	TAMPON
	11600.21289.00	2	TAMPONE	BLOC CAOUTCHOUC	RUBBER PAD	PUFFER	TAMPON
	11600.21323.01	4	DISTANZIALE	ENTRETOISE	SPACER	ABSTANDSTUECK	SEPARADOR
	11600.21327.00	0	SPESSORE	CALE	SPACER	BEILAGE	ESPESOR
	11600.21342.00	4	VITE	VIS	SCREW	SCHRAUBE	TORNILLO

PARTICOLARI DEI LEVERAGGI INFERIORI SOSPENSIONE ANTERIORE
DETAIL DES BRAS INFERIEURS DE SUSPENSION AVANT
FRONT SUSPENSION LOWER ARM HARDWARE
VORDERRADAUFHÄNGUNG EINZELTEILE DER QUERLENKER UNTEN
PIEZAS DE LAS PALANQUETAS INFERIORES SUSPENSION ANTERIOR

TAV. 31.02

1ª	EDIZIONE	1974	APRILE
ère	EDITION		AVRIL
ª	EDITION		APRIL
	AUSGABE		APRIL
ª	EDICION		ABRIL

DATA DI CONSEGNA

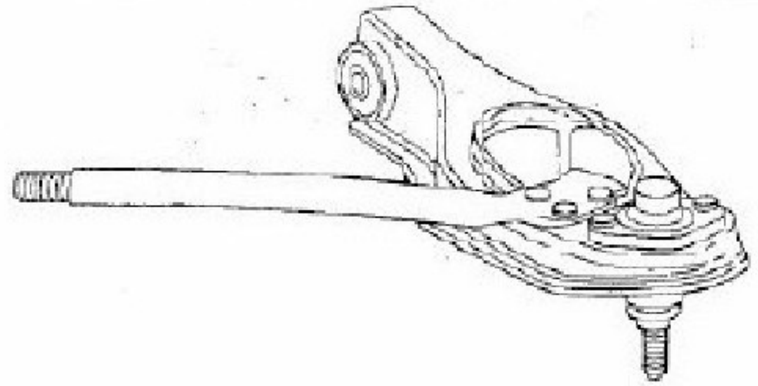

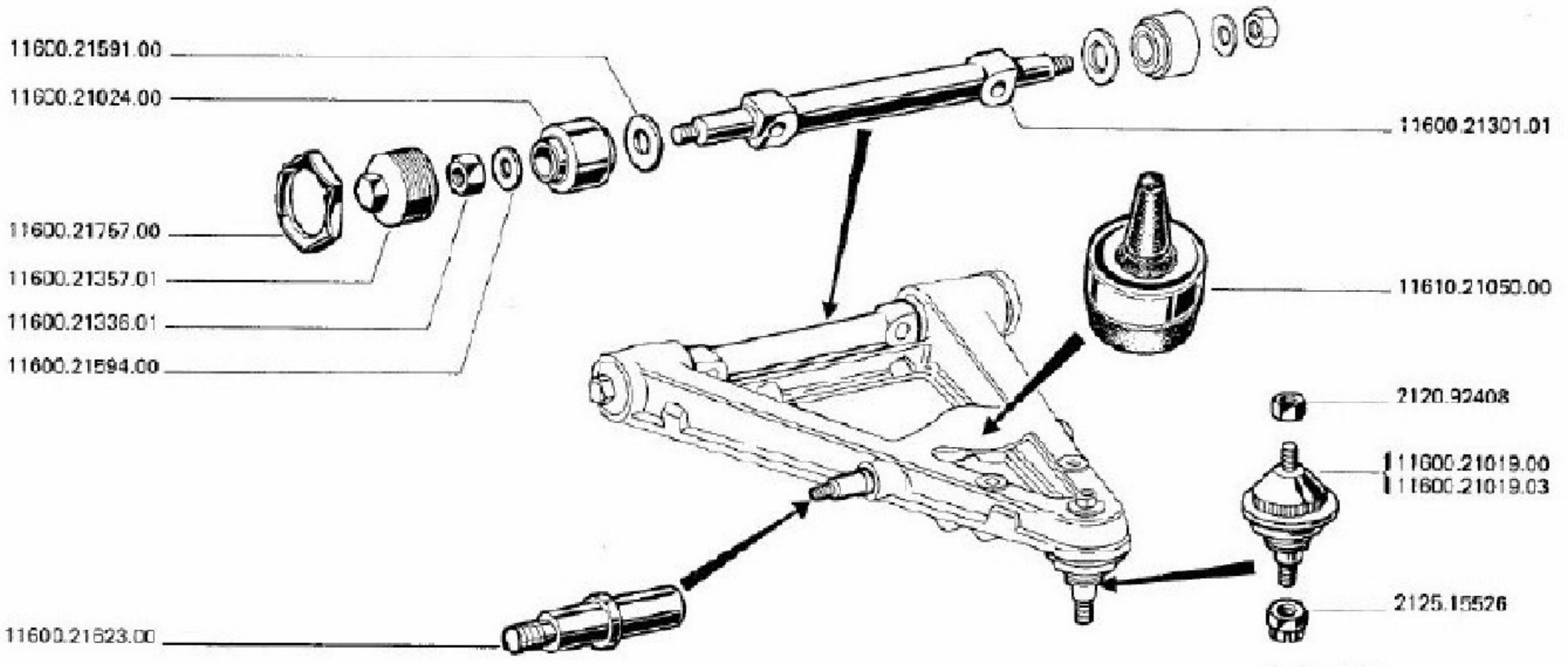

N. 5835

Alfetta GT

TAV. 31.0240

PARTICOLARI DEI LAVERAGGI INFERIORI SOSPENSIONE ANTERIORE
DETAIL DES BRAS INFERIEURS DE SUSPENSION AVANT
FRONT SUSPENSION LOWER ARM HARDWARE
VORDERRADAUFHANGUNG EINZELTEILE DER QUERLENKER UNTEN
PIEZAS DE LAS PALANQUETAS INFERIORES SUSPENSION ANTERIOR

MODIFICA	N. ORDINAZIONE	QT.	DENOMINAZIONE	DESIGNATION	DESCRIPTION	BENENNUNG	DENOMINACIONES
	2120.92408	2	DADO	ECROU	NUT	MUTTER	TUERCA
	2125.15526	2	DADO	ECROU	NUT	MUTTER	TUERCA
	11600.21019.00 *	2	SNODO	ROTULE	PACKING	GELENK	MANGUETA
	11600.21019.03 *	2	SNODO	ROTULE	PACKING	GELENK	MANGUETA
	11600.21024.00	4	BOCCOLA	BAGUE	BUSHING	BUECHSE	CASQUILLO
	11600.21301.01	2	SUPPORTO	SUPPORT	SUPPORT	LAGERUNG	SOPORTE
	11600.21336.01	4	DADO	ECROU	NUT	MUTTER	TUERCA
	11600.21357.01	2	GHIERA	ECROU A ENCOCHES	RING NUT	RINGMUTTER	ARANDELA
	11600.21591.00	4	RONDELLA	RONDELLE	WASHER	SCHEIBE	ARANDELLA
	11600.21594.00	4	RONDELLA	RONDELLE	WASHER	SCHEIBE	ARANDELLA
	11600.21623.00	2	PERNO	AXE	PIVOT PIN	ZAPFEN	PERNO
	11600.21757.00	2	DADO	ECROU	NUT	MUTTER	TUERCA
	11610.21050.00	2	TAMPONE FINE CORSA	BLOC CAOUTCHOUC	RUBBER PAD	PUFFER	TAMPON

* ALTERNATIVA ALTERNATIVE ALTERNATIVE WAHLWEISE ALTERNATIVA

PARTICOLARI DEI LEVERAGGI SUPERIORI SOSPENSIONE ANTERIORE
DETAIL DES BRAS SUPERIEURS DE SUSPENSION AVANT
FRONT SUSPENSION UPPER ARM HARDWARE
VORDERRADAUFHANGUNG EINZELTEILE DER QUERLENKER OBEN
PIEZAS DE LAS PALANQUETAS SUPERIORES SUSPENSION ANTERIOR

TAV. 31.03

1	EDIZIONE	1974	APRILE
1ª	EDITION		AVRIL
1a	EDITION		APRIL
1.	AUSGABE		APRIL
1ª	EDICION		ABRIL

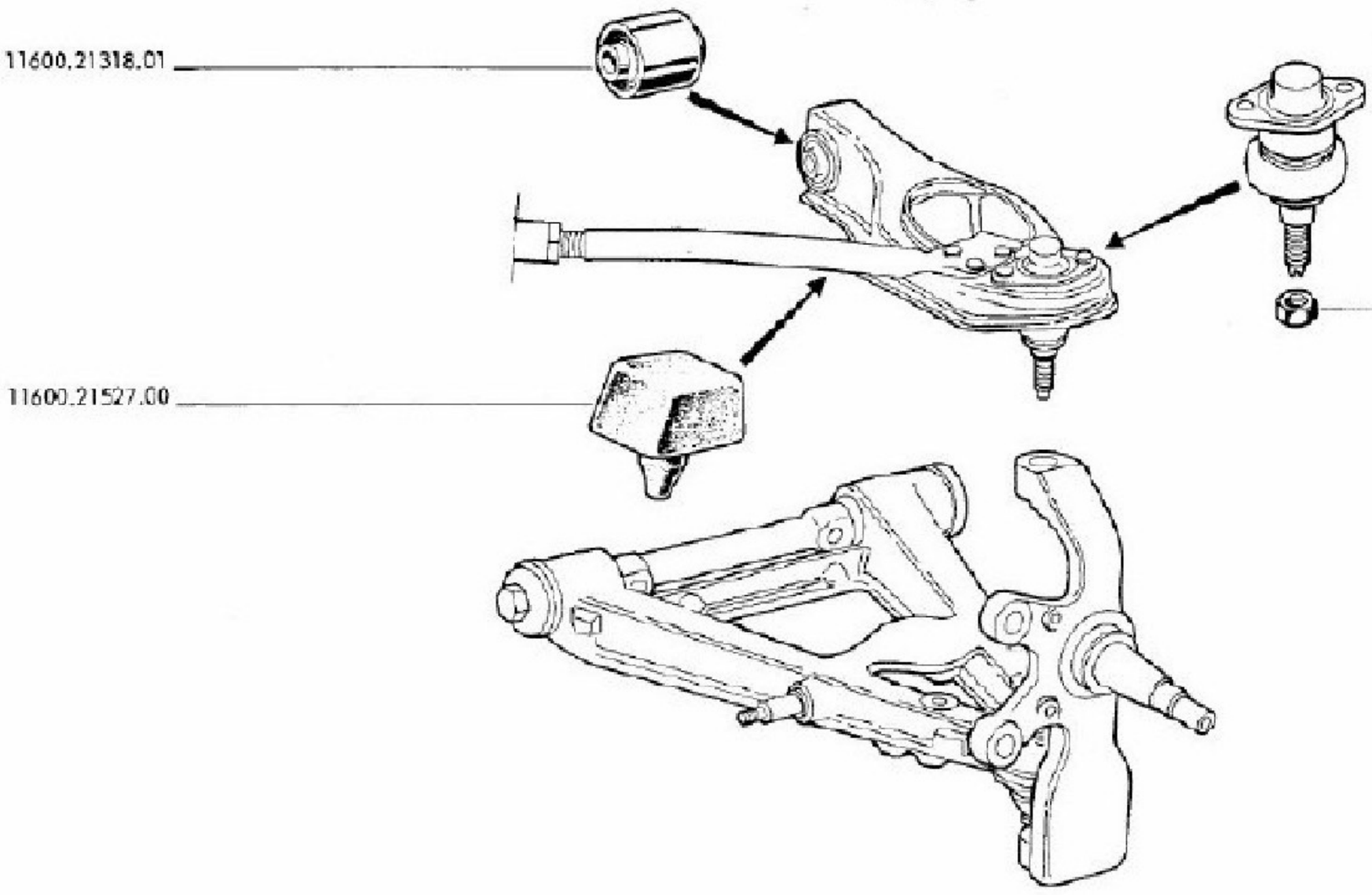

TAV. 31.03/0

PARTICOLARI DEI LAVERAGGI SUPERIORI SOSPENSIONE ANTERIORE
DETAIL DES BRAS SUPERIEURS DE SUSPENSION AVANT
FRONT SUSPENSION UPPER ARM HARDWARE
VORDERRADAUFHANGUNG EINZELTEILE DER QUERLENKER OBEN
PIEZAS DE LAS PALANQUETAS SUPERIORES SUSPENSION ANTERIOR

MODIFICA	N. ORDINAZIONE	QT.	DENOMINAZIONE	DÉSIGNATION	DESCRIPTION	BENENNUNG	DENOMINACIONES
	2120.92866	2	DADO	ECROU	NUT	MUTTER	TUERCA
	11600.21318.01	2	SILENTBLOC	SILENTBLOC	SILENTBLOCK	SILENTBLOCK	SILENTBLOC
	11600.21527.00	2	TAMPONE FINE CORSA	BLOC CAOUTCHOUC	RUBBER PAD	PUFFER	TAMPON

BARRE DI TORSIONE DELLA SOSPENSIONE ANTERIORE
BARRE DE TORSION DE SUSPENSION AVANT
FRONT SUSPENSION TORSION BARS
DREHSTÄBE DER VORDERRADAUFHÄNGUNG
BARRAS DE TORSION DE LA SUSPENSION DELANTERA

TAV. 31.05

1 EDIZIONE APRILE 1974
1 EDITION AVRIL 1974
1 EDITION APRIL 1974
1 AUSGABE APRIL 1974
1 EDICION ABRIL 1974

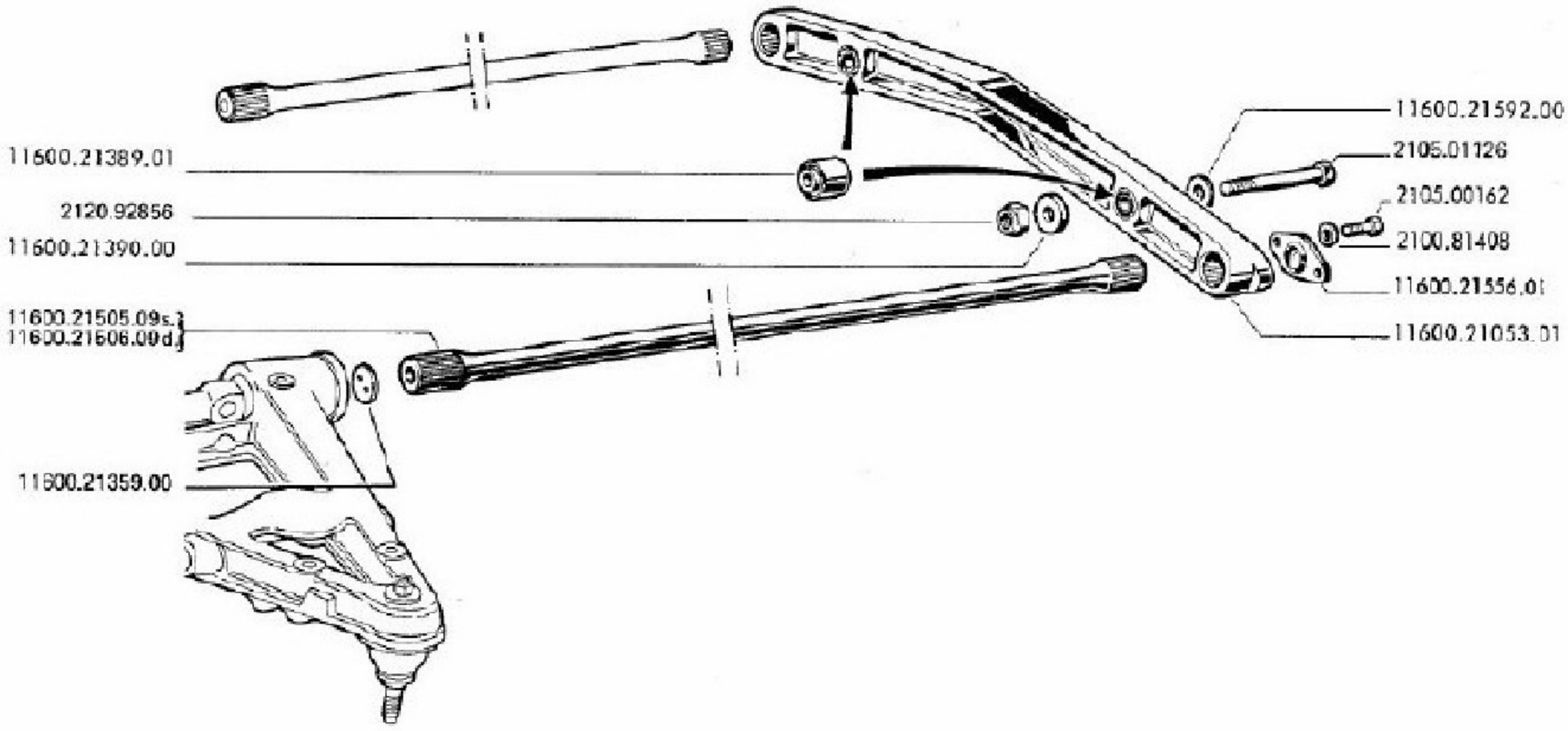

TAV. 31.05/0

BARRE DI TORSIONE DELLA SOSPENSIONE ANTERIORE
BARRE DE TORSION DE SUSPENSION AVANT
FRONT SUSPENSION TORSION BARS
DREHSTABE DER VORDERRADAUFHANGUNG
BARRAS DE TORSION DE LA SUSPENSION DELANTERA

MODIFICA	N. ORDINAZIONE	QT.	DENOMINAZIONE	DESIGNATION	DESCRIPTION	BENENNUNG	DENOMINACIONES
	2100.81408	4	RONDELLA	RONDELLE	WASHER	SCHEIBE	ARANDELLA
	2105.00162	4	VITE	VIS	SCREW	SCHRAUBE	TORNILLO
	2105.01126	2	VITE	VIS	SCREW	SCHRAUBE	TORNILLO
	2120.92856	2	DADO	ECROU	NUT	MUTTER	TUERCA
	11600.21053.01	1	TRAVERSA	TRAVERSE	CROSS MEMBER	QUERTRAEGER	TRAVESANO
	11600.21359.00	2	RONDELLA	RONDELLE	WASHER	SCHEIBE	ARANDELLA
	11600.21389.01	2	SILENTBLOC	SILENTBLOC	SILENTBLOCK	SILENTBLOCK	SILENTBLOC
	11600.21390.00	2	DISTANZIALE	ENTRETOISE	SPACER	ABSTANDSTUECK	SEPARADOR
	11600.21505.09	1	BARRA TORSIONE S.	BARRE DE TORSION	TORSION BAR	DREHSTAB	BARRA DE TORSION
	11600.21506.09	1	BARRA TORSIONE D.	BARRE DE TORSION	TORSION BAR	DREHSTAB	BARRA DE TORSION
	11600.21556.01	2	COPERCHIETTO	COUVERCLE	COVER	DECKEL	TAPA
	11600.21592.00	4	RONDELLA	RONDELLE	WASHER	SCHEIBE	ARANDELLA

AMMORTIZZATORI ANTERIORI
AMORTISSEURS AVANT
FRONT SHOCK ABSORBERS
STOSSDÄMPFER VORN
AMORTIGUADORS ANTERIORES

TAV. 31.06

1ª	EDIZIONE	1974	APRILE
1st	EDITION		AVRIL
1st	EDITION		APRIL
1.	AUSGABE		APRIL
1ª	EDICION		ABRIL

DATA ULTIMO AGGIORNAMENTO

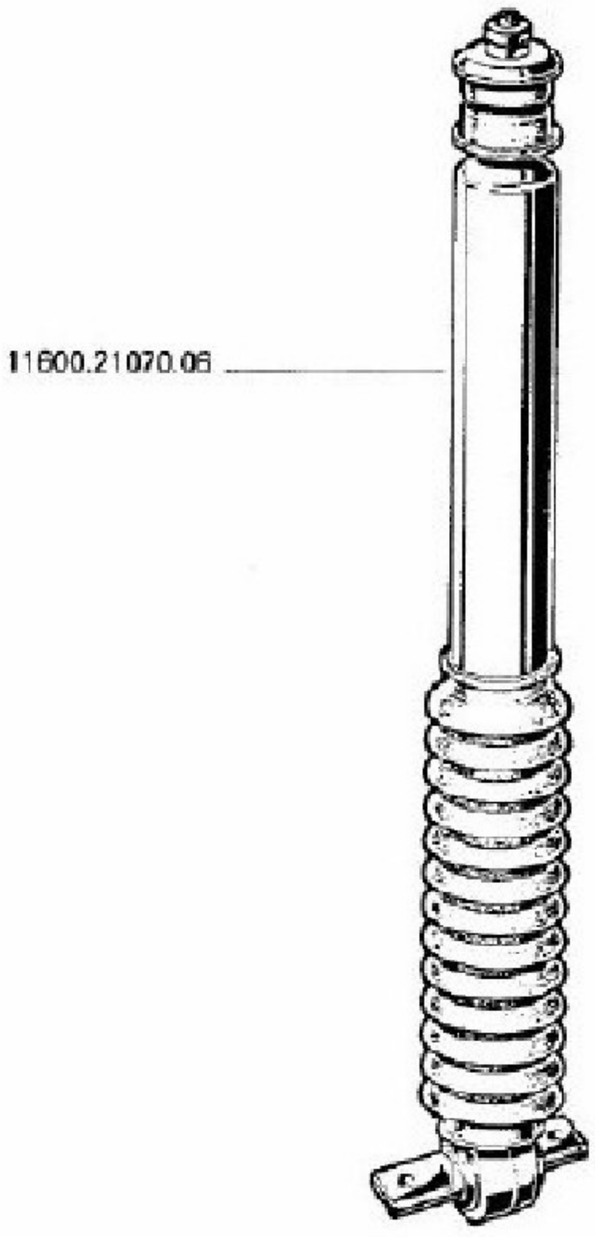

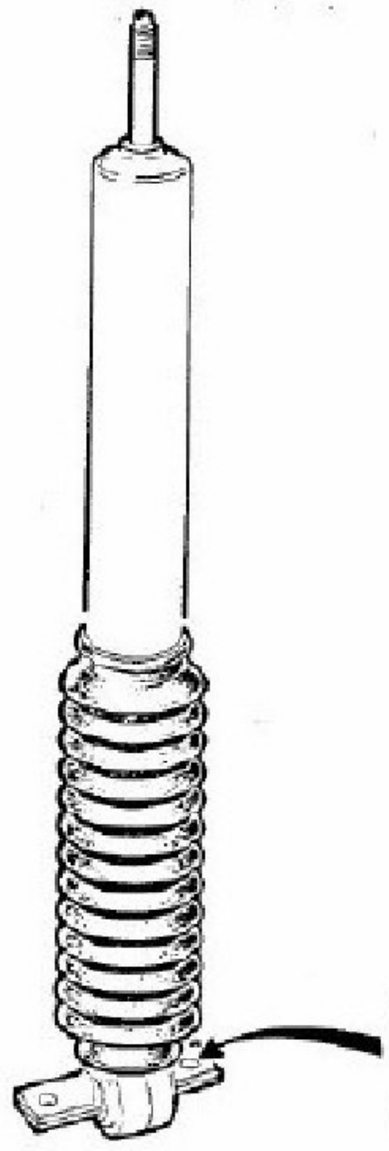

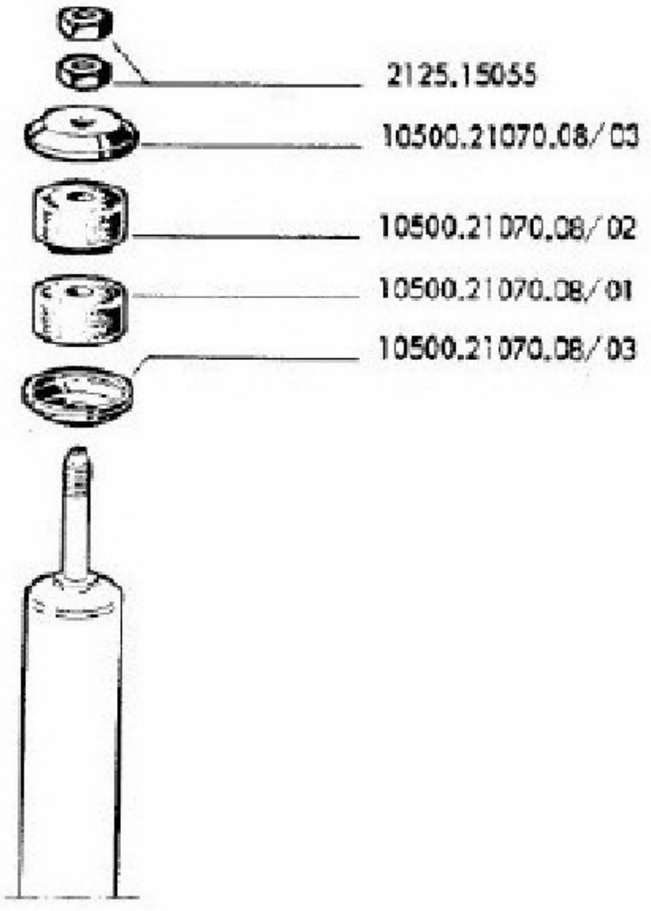

TAV. 31.06/0

AMMORTIZZATORI ANTERIORI
AMMORTISSEURS AVANT
FRONT SHOCK ABSORBERS
STOSSDAMPFER VORN
AMORTIGUADORS ANTERIORES

MODIFICA	N. ORDINAZIONE	QT.	DENOMINAZIONE	DESIGNATION	DESCRIPTION	BENENNUNG	DENOMINACIONES
	2100.81434	4	RONDELLA	RONDELLE	WASHER	SCHEIBE	ARANDELLA
	2105.02004	4	VITE	VIS	SCREW	SCHRAUBE	TORNILLO
	2125.15055	4	DADO	ECROU	NUT	MUTTER	TUERCA
	10500.21070.08/01	2	GOMMINO	CAOUTCHOUC	GROMMET	GUMMITEIL	GOMITA
	10500.21070.08/02	2	GOMMINO	CAOUTCHOUC	GROMMET	GUMMITEIL	GOMITA
	10500.21070.08/03	4	RONDELLA	RONDELLE	WASHER	SCHEIBE	ARANDELLA
	11600.21070.06	2	AMMORTIZZATORE	AMORTISSEUR	SHOCK ABSORBER	STOSSDAEMPFER	AMORTIGUADOR

BARRA STABILIZZATRICE ANTERIORE
BARRE STABILISATRICE AVANT
FRONT STABILIZER ROD
DREHSTAB VORN
BARRA ESTABILISADORA ANTERIOR

TAV. 31.07

1ª EDIZIONE 1ère EDITION 1st EDITION AUSGABE 1ª EDICION — APRILE APRIL APRIL APRIL APRIL — 1974

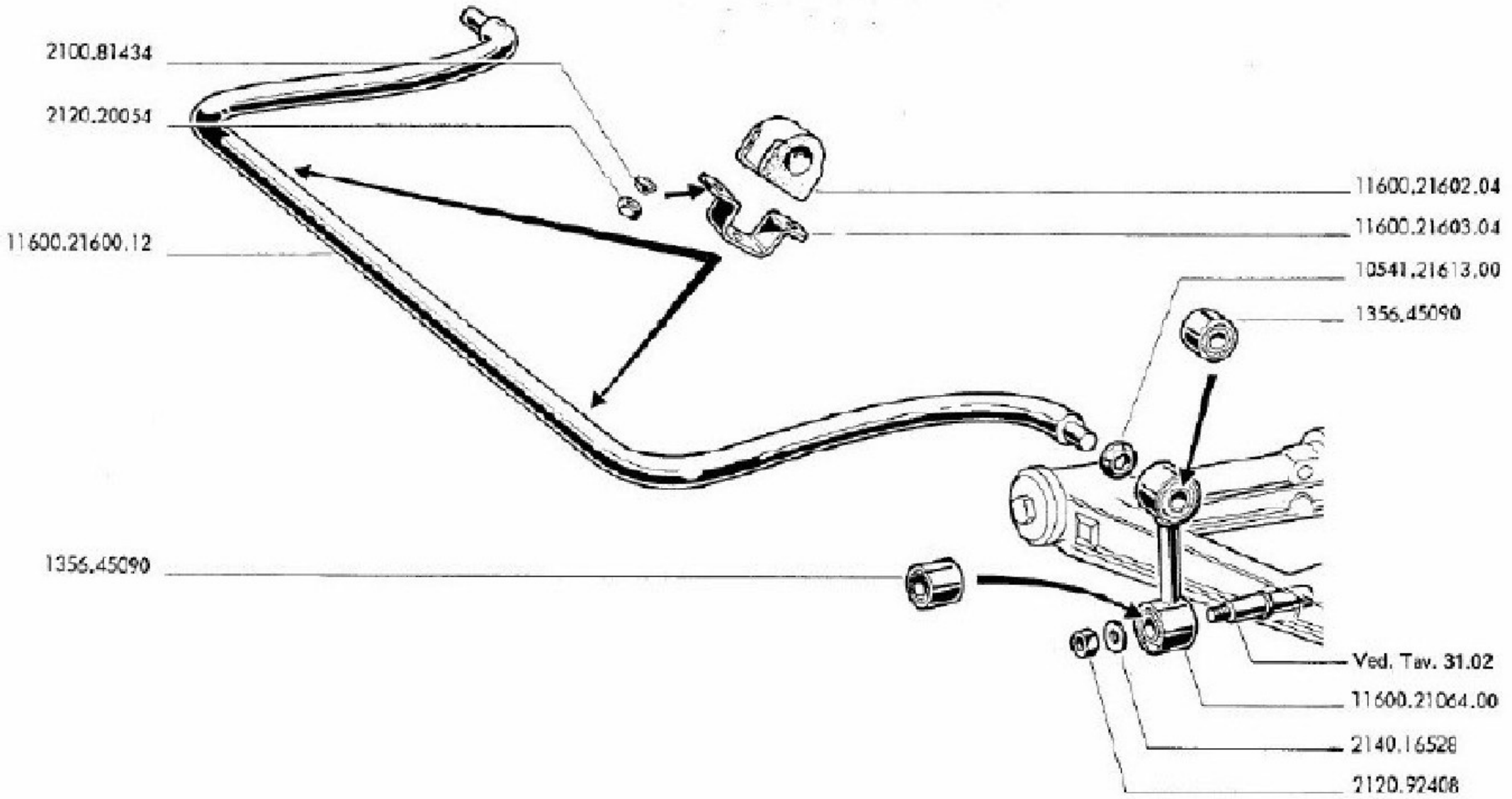

TAV. 31.07/0

BARRA STABILIZZATRICE ANTERIORE
BARRE STABILISATRICE AVANT
FRONT STABILIZER ROD
BREMSBAR VORN
BARRA ESTABILISADORA ANTERIOR

MODIFICA	N. ORDINAZIONE	QT.	DENOMINAZIONE	DESIGNATION	DESCRIPTION	BENENNUNG	DENOMINACIONES
	1356.45090	4	SILENTBLOC	SILENTBLOC	SILENTBLOCK	SILENTBLOCK	SILENTBLOC
	2100.81434	4	RONDELLA	RONDELLE	WASHER	SCHEIBE	ARANDELLA
	2120.20054	4	DADO	ECROU	NUT	MUTTER	TUERCA
	2120.92408	2	DADO	ECROU	NUT	MUTTER	TUERCA
	2140.16528	2	RONDELLA	RONDELLE	WASHER	SCHEIBE	ARANDELLA
	10541.21613.00	2	RONDELLA	RONDELLE	WASHER	SCHEIBE	ARANDELLA
	11600.21064.00	2	BIELLETTA	BIELLETTE	LINK	VERBINDUNGSARM	BIELA
	11600.21600.12	1	BARRA STABILIZZATRIC	BARRE STABILISATRICE	STABILIZER BAR	STABILISATORSTAB	BARRA ESTABILIZADORA
	11600.21602.04	2	GOMMINO	CAOUTCHOUC	GROMMET	GUMMITEIL	GOMITA
	11600.21603.04	2	SUPPORTO	SUPPORT	SUPPORT	LAGERUNG	SOPORTE

MOZZI DELLE RUOTE POSTERIORI
MOYEUX DE ROUES ARRIERE
REAR WHEEL HUBS
HINTERRADNABEN
CUBOS RUEDAS POSTERIORES

TAV. 31.10

1ª	EDIZIONE	APRILE	1974
ère	EDITION	AVRIL	
ª	EDITION	APRIL	
ª	AUSGABE	APRIL	
ª	EDICION	ABRIL	

DATA ULTIMO AGGIORNAMENTO

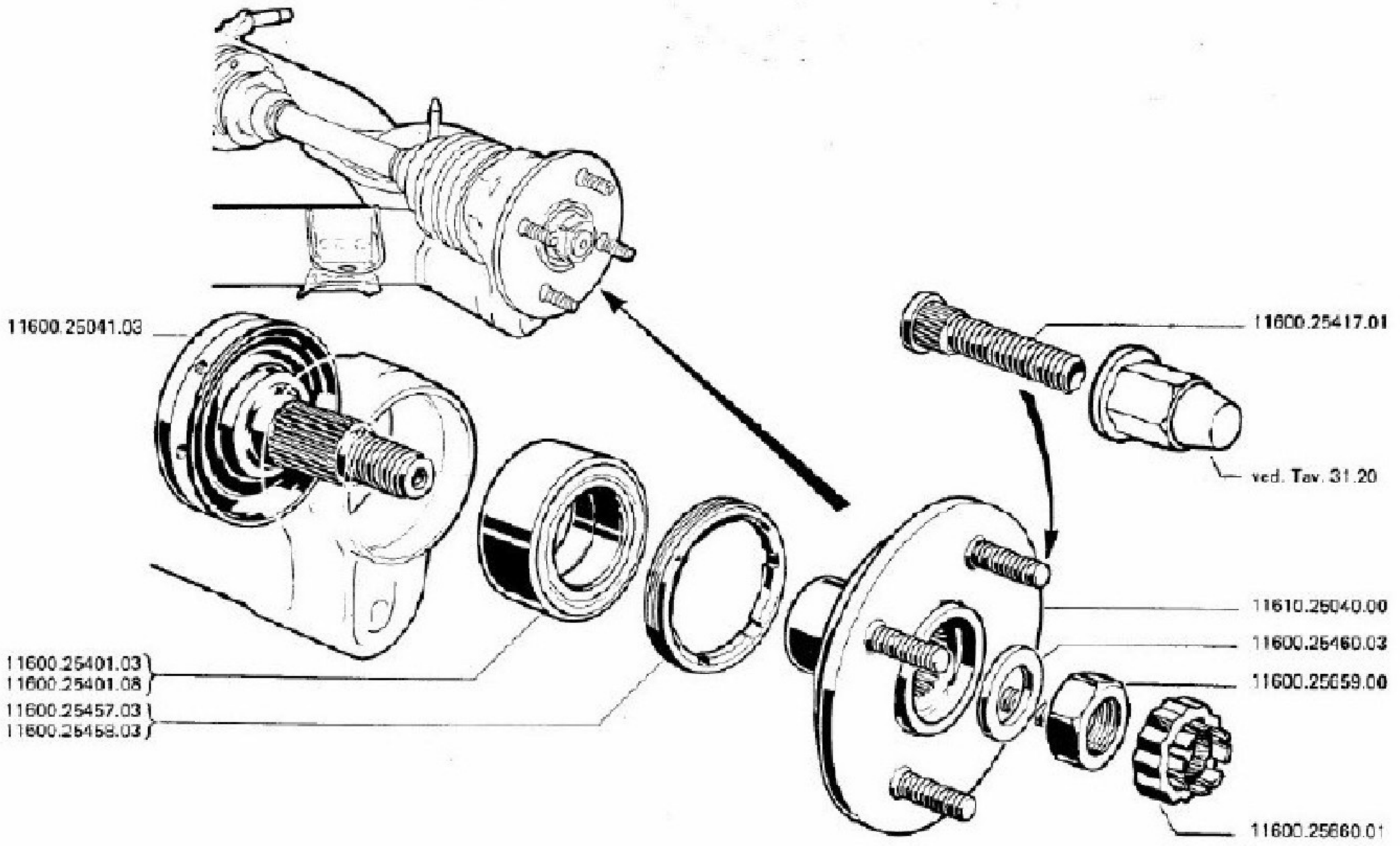

TAV. 31.10/0

MOZZI DELLE RUOTE POSTERIORI
MOYEUX DE ROUES ARRIERE
REAR WHEEL HUBS
HINTE-RADNABEN
CUBOS RUEDAS POSTERIORES

MODIFICA	N. ORDINAZIONE		QT.	DENOMINAZIONE	DESIGNATION	DESCRIPTION	BENENNUNG	DENOMINACIONES
	11600.25041.03		2	ALBERO	ARBRE	SHAFT	WELLE	ARBOL
	11600.25401.03	*	2	CUSCINETTO	ROULEMENT	BEARING	LAGER	COJINETE
	11600.25401.08	*	2	CUSCINETTO	ROULEMENT	BEARING	LAGER	COJINETE
	11600.25417.01		8	VITE	VIS	SCREW	SCHRAUBE	TORNILLO
	11600.25457.03		1	GHIERA S.	ECROU A ENCOCHES	RING NUT	RINGMUTTER	ARANDELA
	11600.25458.03		1	GHIERA D.	ECROU A ENCOCHES	RING NUT	RINGMUTTER	ARANDELA
	11600.25460.03		2	RONDELLA	RONDELLE	WASHER	SCHEIBE	ARANDELLA
	11600.25659.00		2	DADO	ECROU	NUT	MUTTER	TUERCA
	11600.25660.01		2	DADO	ECROU	NUT	MUTTER	TUERCA
	11610.25040.00		2	MOZZO	MOYEU	HUB	NABE	CUBO

* ALTERNATIVA ALTERNATIVE ALTERNATIVE WAHLWEISE ALTERNATIVA

1a EDIZIONE APRILE 1974
1ère EDITION AVRIL
1st EDITION APRIL
1. AUSGABE APRIL
1era EDICION ABRIL
DATA ULTIMO AGGIORNAMENTO

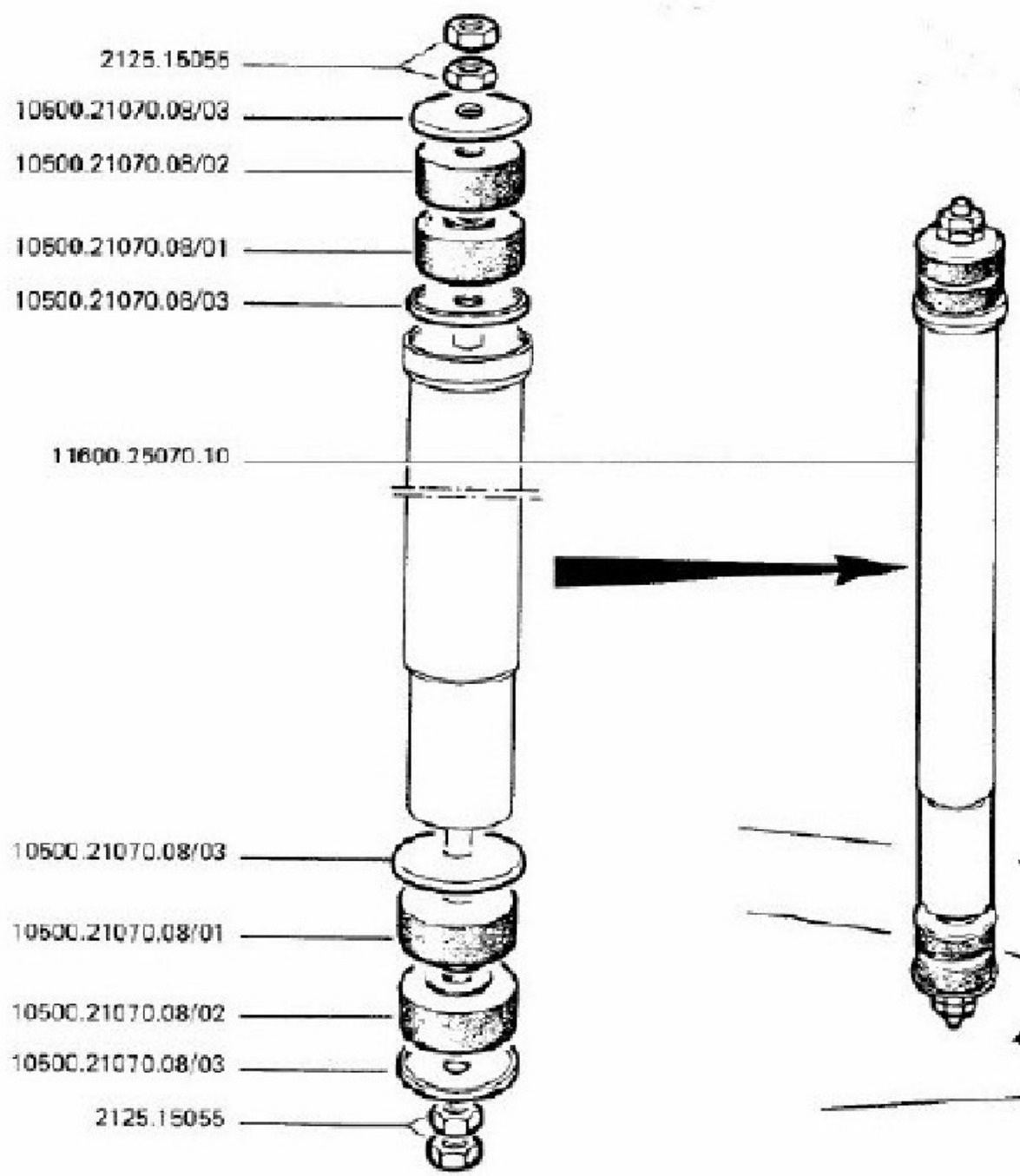

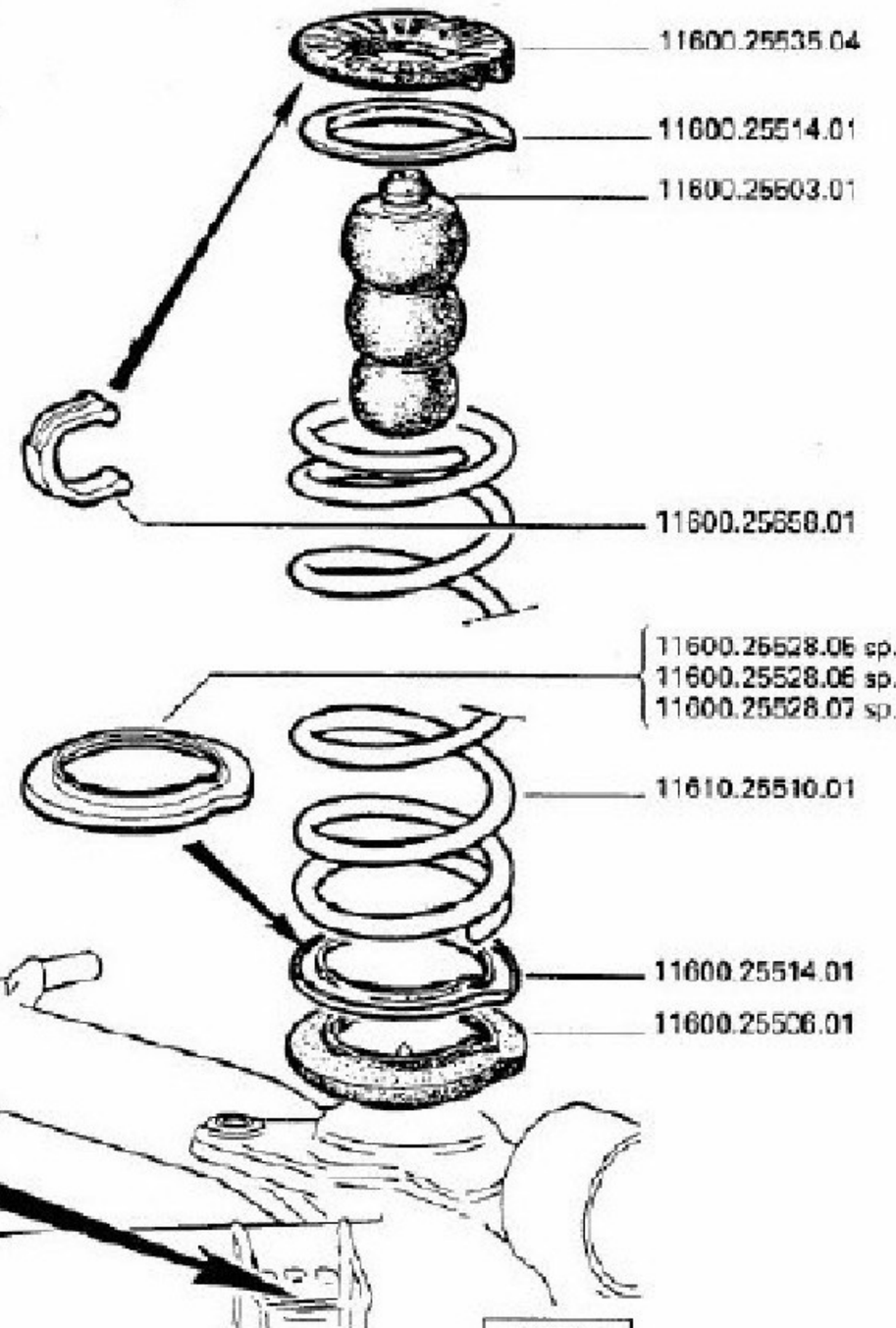

TAV. 31.11/0

SOSPENSIONE POSTERIORE
SUSPENSION ARRIERE
REAR SUSPENSION
HINTERRADAUFHANGUNG
SUSPENSION POSTERIOR

MODIFICA	N. ORDINAZIONE	QT.	DENOMINAZIONE	DÉSIGNATION	DESCRIPTION	BENENNUNG	DENOMINACIONES
	2125.15055	8	DADO	ECROU	NUT	MUTTER	TUERCA
	10500.21070.08/01	4	GOMMINO	CAOUTCHOUC	GROMMET	GUMMITEIL	GOMITA
	10500.21070.08/02	4	GOMMINO	CAOUTCHOUC	GROMMET	GUMMITEIL	GOMITA
	10500.21070.08/03	8	RONDELLA	RONDELLE	WASHER	SCHEIBE	ARANDELLA
	11600.25070.10	2	AMMORTIZZATORE	AMORTISSEUR	SHOCK ABSORBER	STOSSDAEMPFER	AMORTIGUADOR
	11600.25503.01	2	TAMPONE	BLOC CAOUTCHOUC	RUBBER PAD	PUFFER	TAMPON
	11600.25506.01	2	CUSCINO GOMMA INF.	COUSSIN	CUSHION	SITZPOLSTER	COJIN
	11600.25514.01	4	SCODELLINO	COUPELLE	CUP	TELLER	CAZOLETA
	11600.25528.05	0	SPESSORE MM. 7	CALE	SPACER	BEILAGE	ESPESOR
	11600.25528.06	0	SPESSORE MM. 14	CALE	SPACER	BEILAGE	ESPESOR
	11600.25528.07	0	SPESSORE MM. 21	CALE	SPACER	BEILAGE	ESPESOR
	11600.25535.04	2	CUSCINO GOMMA SUP.	COUSSIN	CUSHION	SITZPOLSTER	COJIN
	11600.25658.01	4	FORCELLINO	CHAPE	CLEVIS	GABEL	HORQUILLA
	11610.25510.01	2	MOLLA	RESSORT	SPRING	FEDER	MUELLE

ASSALE POSTERIORE
ESSIEU ARRIÈRE
REAR AXLE
HINTERACHSE
PUENTE POSTERIOR

TAV. 31.13

1 EDIZIONE APRILE
EDITION APRIL
EDITION APRIL
AUSGABE APRIL
EDICION APRIL
1974

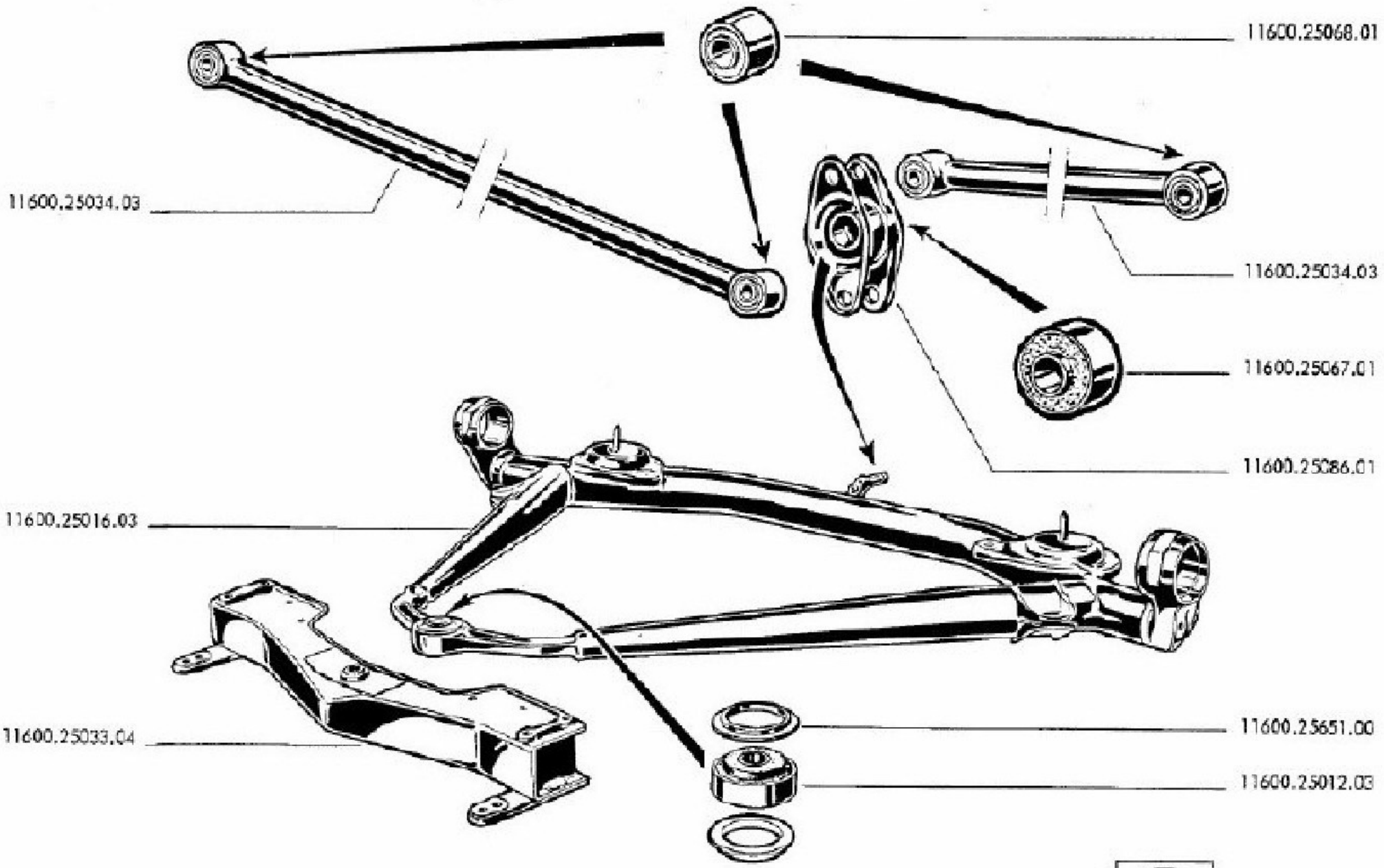

TAV. 31.13/0

ASSALE POSTERIORE
ESSIEU ARRIERE
REAR AXLE
HINTERACHSE
PUENTE POSTERIOR

MODIFICA	N. ORDINAZIONE	QT.	DENOMINAZIONE	DESIGNATION	DESCRIPTION	BENENNUNG	DENOMINACIONES
	11600.25012.03	1	SILENTBLOC ASSALE	SILENTBLOC	SILENTBLOCK	SILENTBLOCK	SILENTBLOC
	11600.25016.03	1	ASSALE	PROFILE EN T	I-BEAM AYLE	ACHSE MIT DOPPEL-T	EJE SECCION A T
	11600.25033.04	1	TRAVERSA	TRAVERSE	CROSS MEMBER	QUERTRAEGER	TRAVESANO
	11600.25034.03	2	BARRA	BARRE	BAR	STANGE	BARRA
	11600.25067.01	1	SILENTBLOC BILANCERE	SILENTBLOC	SILENTBLOCK	SILENTBLOCK	SILENTBLOC
	11600.25068.01	4	SILENTBLOC BARRA	SILENTBLOC	SILENTBLOCK	SILENTBLOCK	SILENTBLOC
	11600.25086.01	1	BILANCERE	BALANCIER	LINK	KIPPHEBEL	BALANCIN
	11600.25651.00	2	RONDELLA	RONDELLE	WASHER	SCHEIBE	ARANDELLA

PARTICOLARI E BULLONERIA ASSALE POSTERIORE
DETAIL DE L'ESSIEU ARRIERE ET BOULONNERIE
REAR AXLE DETAILS AND HARDWARE
HINTERACHSE-EINZELTEILE UND VERSCHRAUBUNGEN
DETALLE Y TORNILLERIA PUENTE POSTERIOR

TAV. 31.14

1ª	EDIZIONE	1974	APRILE
1re	EDITION		AVRIL
1st	EDITION		APRIL
1.	AUSGABE		APRIL
1ª	EDICION		ABRIL

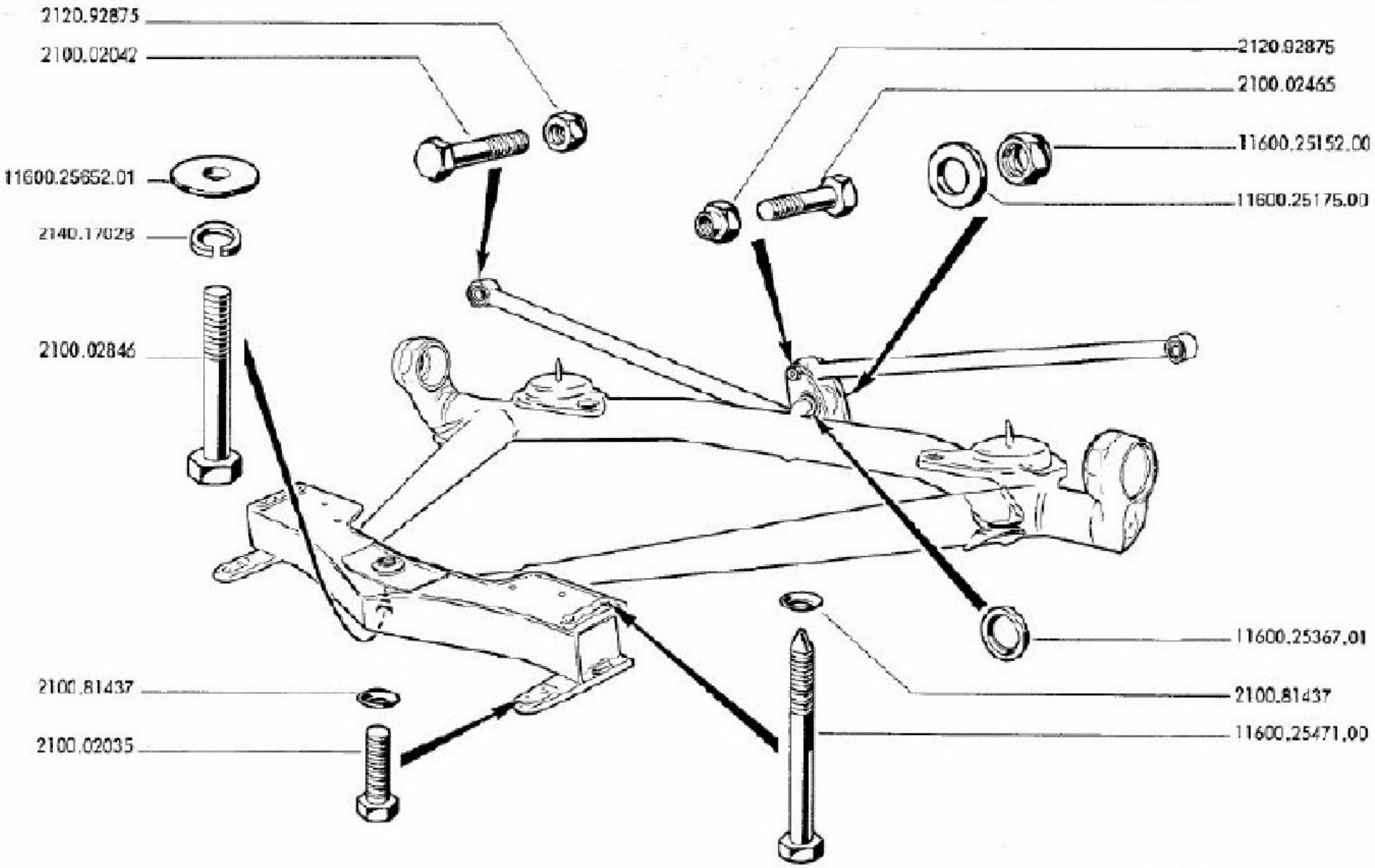

N. 6665/0

Alfetta GT

TAV. 31.14/0 PARTICOLARI E BULLONERIA ASSALE POSTERIORE
DETAIL DE L ESSIEU ARRIERE ET BOULONNERIE
REAR AXLE DETAILS AND HARDWARE
HINTERACHS-EINZELTEILE UND VERSCHRAUBUNGEN
DETALLE Y TORNILLERIA PUENTE POSTERIOR

MODIFICA	N. ORDINAZIONE	QT.	DENOMINAZIONE	DESIGNATION	DESCRIPTION	BENENNUNG	DENOMINACIONES
	2100.02035	2	VITE	VIS	SCREW	SCHRAUBE	TORNILLO
	2100.02042	2	VITE	VIS	SCREW	SCHRAUBE	TORNILLO
	2100.02465	2	VITE	VIS	SCREW	SCHRAUBE	TORNILLO
	2100.02846	1	VITE	VIS	SCREW	SCHRAUBE	TORNILLO
	2100.81437	6	RONDELLA	RONDELLE	WASHER	SCHEIBE	ARANDELLA
	2120.92875	4	DADO	ECROU	NUT	MUTTER	TUERCA
	2140.17028	1	RONDELLA	RONDELLE	WASHER	SCHEIBE	ARANDELLA
	11600.25152.00	1	DADO	ECROU	NUT	MUTTER	TUERCA
	11600.25175.00	1	RONDELLA	RONDELLE	WASHER	SCHEIBE	ARANDELLA
	11600.25367.01	1	RONDELLA	RONDELLE	WASHER	SCHEIBE	ARANDELLA
	11600.25471.00	4	VITE	VIS	SCREW	SCHRAUBE	TORNILLO
	11600.25652.01	1	DISTANZIALE	ENTRETOISE	SPACER	ABSTANDSTUECK	SEPARADOR

BARRA STABILIZZATRICE POSTERIORE
BARRE STABILISATRICE ARRIERE
REAR STABILIZER ROD
DREHSTAB HINTEN
BARRA ESTABILIZADORA POSTERIOR

TAV. 31.16

1	1ª EDIZIONE	1974	APRILE
	1ère EDITION		AVRIL
	1st EDITION		APRIL
	1. AUSGABE		APRIL
	1ra EDICION		ABRIL

DATA ULTIMO AGGIORNAMENTO

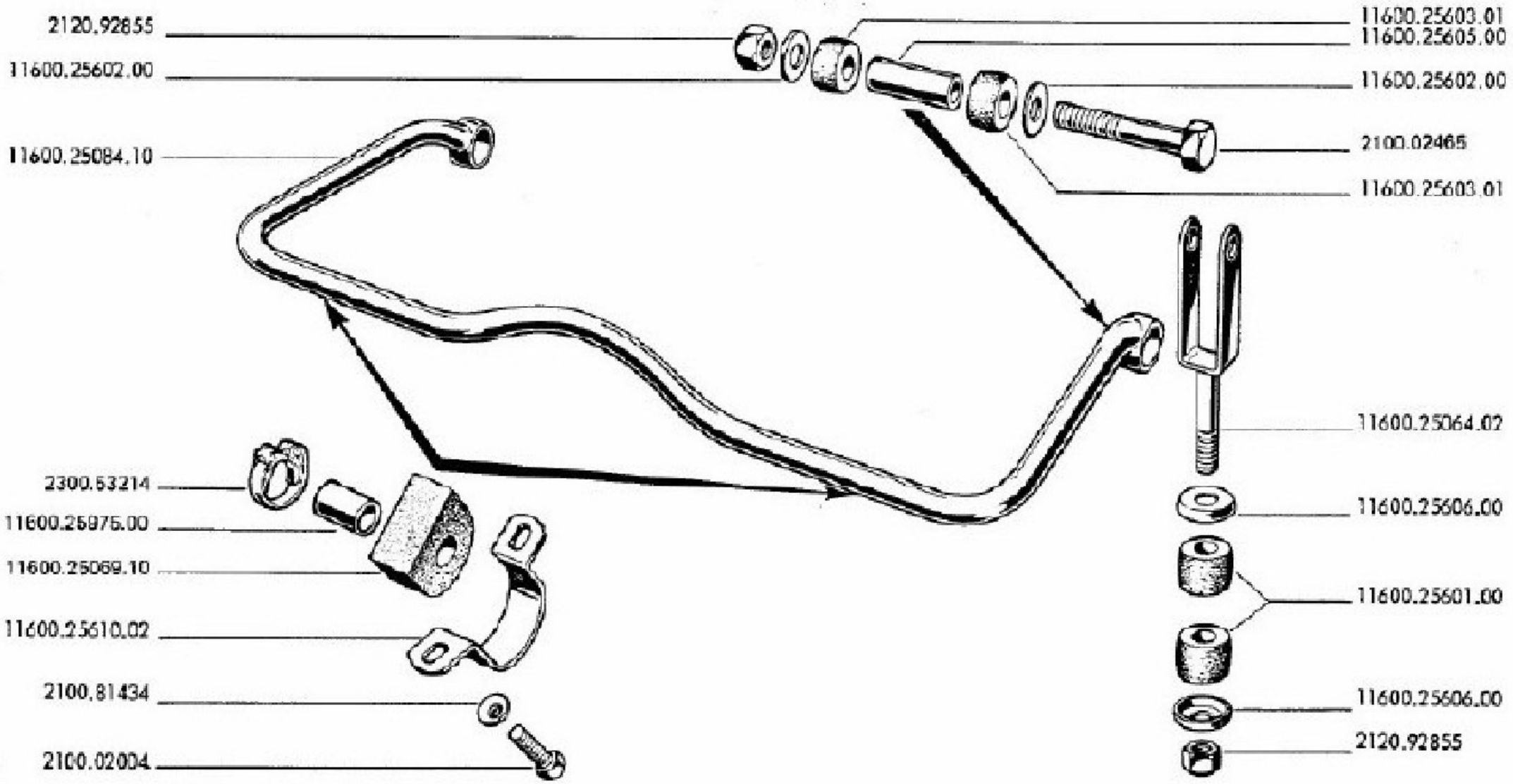

TAV. 31.16/0

BARRA STABILIZZATRICE POSTERIORE
BARRE STABILISATRICE ARRIERE
REAR STABILIZER ROD
DREHSTAB HINTEN
BARRA ESTABILIZADORA POSTERIOR

MODIFICA	N. ORDINAZIONE	QT.	DENOMINAZIONE	DESIGNATION	DESCRIPTION	BENENNUNG	DENOMINACIONES
	2100.02004	4	VITE	VIS	SCREW	SCHRAUBE	TORNILLO
	2100.02465	2	VITE	VIS	SCREW	SCHRAUBE	TORNILLO
	2100.81434	4	RONDELLA	RONDELLE	WASHER	SCHEIBE	ARANDELLA
	2120.92855	4	DADO	ECROU	NUT	MUTTER	TUERCA
	2300.53214	2	FASCETTA	PATTE DE FIXATION	CLAMP	SCHELLE	ABRAZADERA
	11600.25064.02	2	FORCELLINO	CHAPE	CLEVIS	GABEL	HORQUILLA
	11600.25069.10	2	GOMMINO	CAOUTCHOUC	GROMMET	GUMMITEIL	GOMITA
	11600.25084.10	1	BARRA STABILIZZATRIC	BARRE STABILISATRICE	STABILIZER BAR	STABILISATORSTAB	BARRA ESTABILIZADORA
	11600.25601.00	4	TAMPONE	BLOC CAOUTCHOUC	RUBBER PAD	PUFFER	TAMPON
	11600.25602.00	4	RONDELLA	RONDELLE	WASHER	SCHEIBE	ARANDELLA
	11600.25603.01	4	GOMMINO	CAOUTCHOUC	GROMMET	GUMMITEIL	GOMITA
	11600.25605.00	2	DISTANZIALE	ENTRETOISE	SPACER	ABSTANDSTUECK	SEPARADOR
	11600.25606.00	4	RONDELLA	RONDELLE	WASHER	SCHEIBE	ARANDELLA
	11600.25610.02	2	SUPPORTO	SUPPORT	SUPPORT	LAGERUNG	SOPORTE
	11600.25975.00	2	MANICOTTO	BALADEUR	SLEEVE	SCHALEMUFFE	MANGUITO

RUOTE
ROUES
WHEELS
RÄDER
RUEDAS

TAV. 31.20

1ª	EDIZIONE	APRILE	1974
1ère	EDITION	AVRIL	
1st	EDITION	APRIL	
1.	AUSGABE	APRIL	
1ra	EDICION	ABRIL	

DATA ULTIMO AGGIORNAMENTO

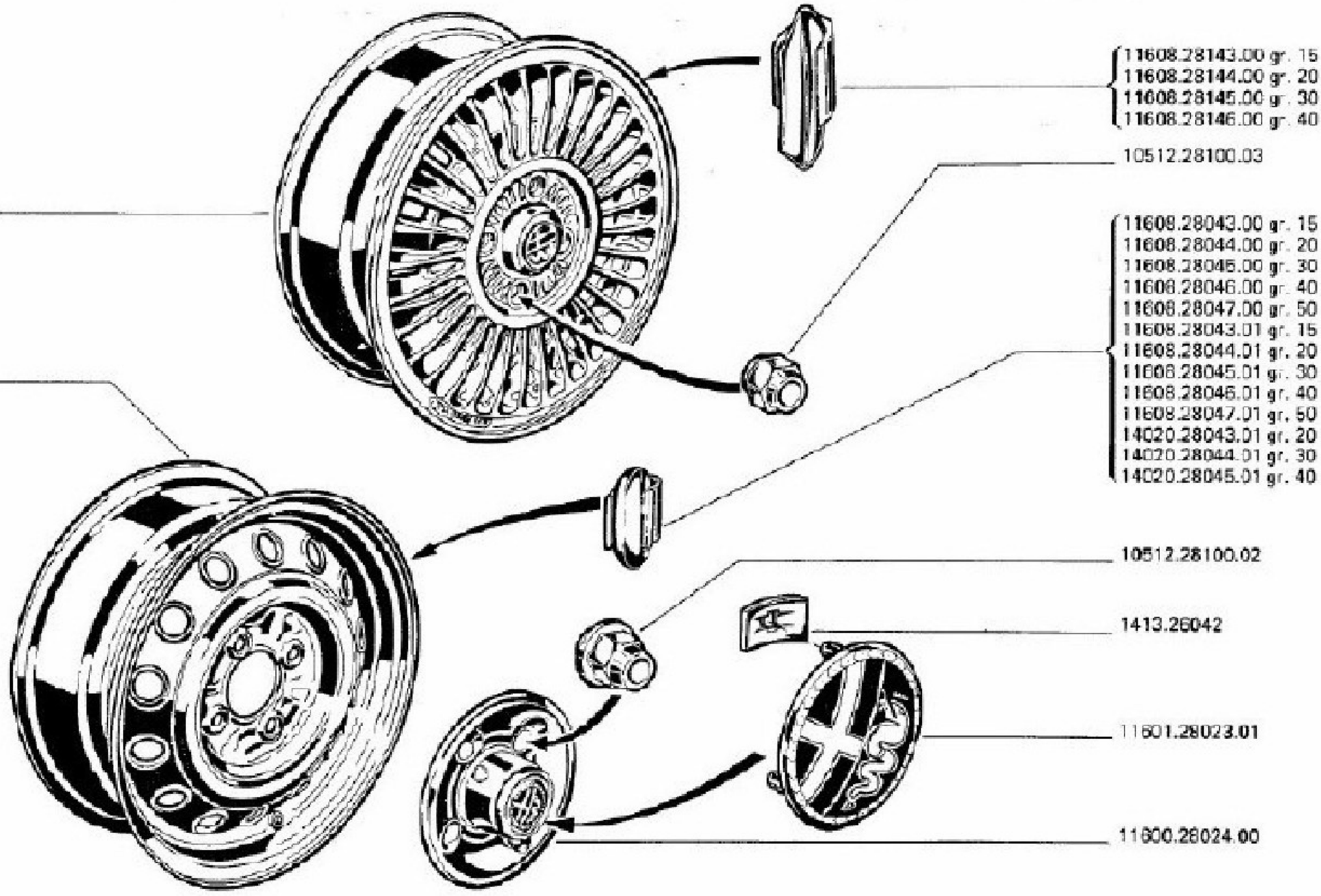

TAV. 31.20/0

RUOTE
ROUES
WHEELS
RÄDER
RUEDAS

MODIFICA	N. ORDINAZIONE		QT.	DENOMINAZIONE	DESIGNATION	DESCRIPTION	BENENNUNG	DENOMINACIONES
	1413.26042		4	MOLLETTA	AGRAFE	CLIP	KLEMMSTUECK	MUELLECITO
	10512.28100.02		16	DADO FISS. RUOTA	ECROU	NUT	MUTTER	TUERCA
	10512.28100.03	*	16	DADO FISS. RUOTA	ECROU	NUT	MUTTER	TUERCA
	11600.28010.00		5	RUOTA	ROUE	WHEEL	RAD	RUEDA
	11600.28024.00		4	COPPA PER RUOTA	ENJOLIVEUR DE ROUE	WHEEL DISC	RADZIERDECKEL	COPA RUEDA
	11601.28010.04		5	RUOTA IN LEGA	ROUE	WHEEL	RAD	RUEDA
	11601.28023.01		4	DISTINTIVO	ECUSSON	BADGE	ABZEICHEN	DISTINTIVO
	11608.28043.00	-	0	CONTRAPPESO GR. 15	CONTREPOIDS	COUNTER WEIGHT	GEGENGEWICHT	CONTRAPESO
	11608.28043.01	-	0	CONTRAPPESO GR. 15	CONTREPOIDS	COUNTER WEIGHT	GEGENGEWICHT	CONTRAPESO
	11608.28044.00	-	0	CONTRAPPESO GR. 20	CONTREPOIDS	COUNTER WEIGHT	GEGENGEWICHT	CONTRAPESO
	11608.28044.01	-	0	CONTRAPPESO GR. 20	CONTREPOIDS	COUNTER WEIGHT	GEGENGEWICHT	CONTRAPESO
	11608.28045.00	-	0	CONTRAPPESO GR. 30	CONTREPOIDS	COUNTER WEIGHT	GEGENGEWICHT	CONTRAPESO
	11608.28045.01	-	0	CONTRAPPESO GR. 30	CONTREPOIDS	COUNTER WEIGHT	GEGENGEWICHT	CONTRAPESO
	11608.28046.00	-	0	CONTRAPPESO GR. 40	CONTREPOIDS	COUNTER WEIGHT	GEGENGEWICHT	CONTRAPESO
	11608.28046.01	-	0	CONTRAPPESO GR. 40	CONTREPOIDS	COUNTER WEIGHT	GEGENGEWICHT	CONTRAPESO
	11608.28047.00	-	0	CONTRAPPESO GR. 50	CONTREPOIDS	COUNTER WEIGHT	GEGENGEWICHT	CONTRAPESO
	11608.28047.01	-	0	CONTRAPPESO GR. 50	CONTREPOIDS	COUNTER WEIGHT	GEGENGEWICHT	CONTRAPESO
	11608.28143.00	*	0	CONTRAPPESO GR. 15	CONTREPOIDS	COUNTER WEIGHT	GEGENGEWICHT	CONTRAPESO
	11608.28144.00	*	0	CONTRAPPESO GR. 20	CONTREPOIDS	COUNTER WEIGHT	GEGENGEWICHT	CONTRAPESO
	11608.28145.00	*	0	CONTRAPPESO GR. 30	CONTREPOIDS	COUNTER WEIGHT	GEGENGEWICHT	CONTRAPESO
	11608.28146.00	*	0	CONTRAPPESO GR. 40	CONTREPOIDS	COUNTER WEIGHT	GEGENGEWICHT	CONTRAPESO

TAV. 31.20

1 EDIZIONE 1974 APRILE
1 EDITION AVRIL
1 EDITION APRIL
1 AUSGABE APRIL
1 EDICION ABRIL

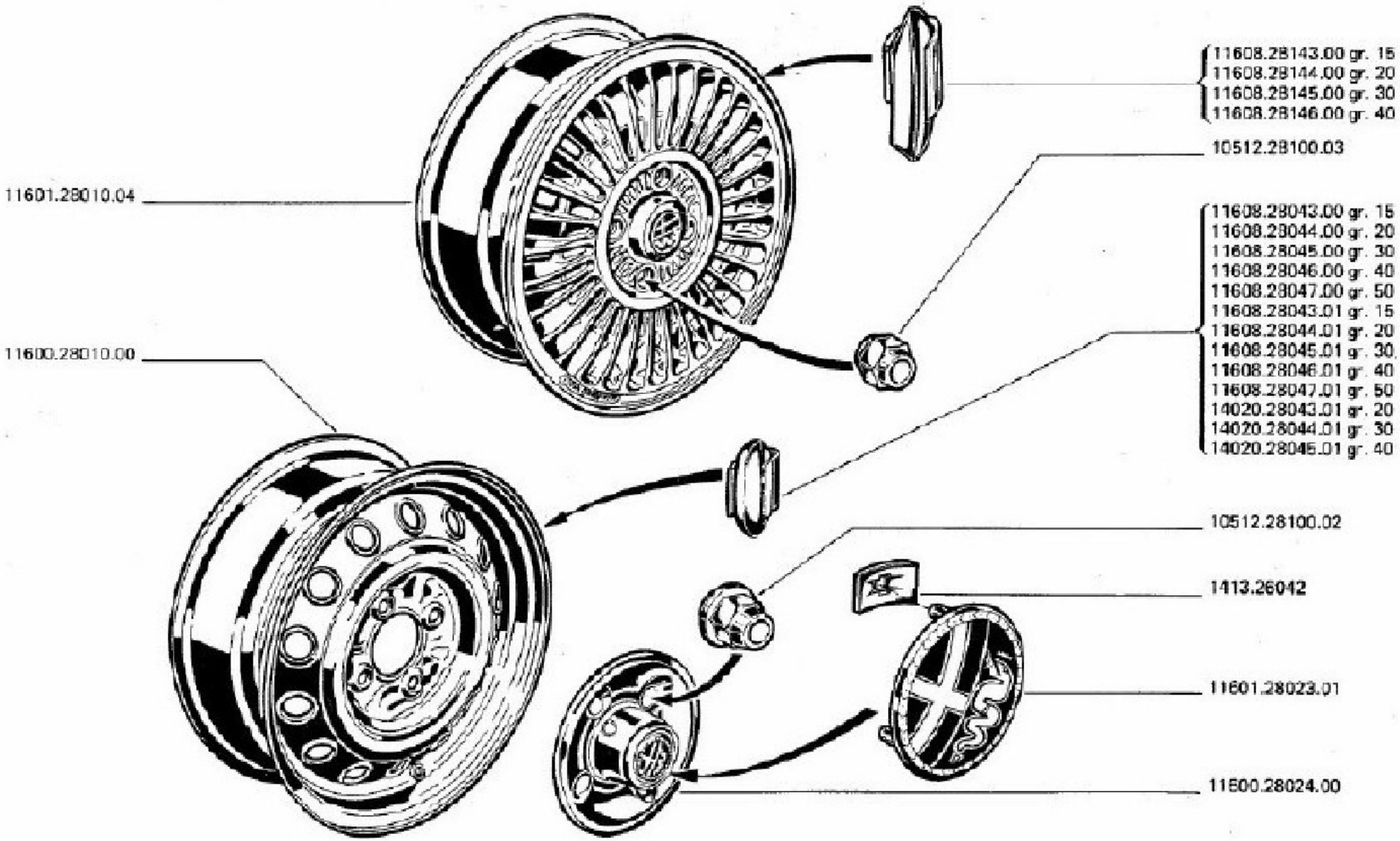

TAV. 31.20/0

RUOTE
ROUES
WHEELS
RADER
RUEDAS

MODIFICA	N. ORDINAZIONE	QT.	DENOMINAZIONE	DESIGNATION	DESCRIPTION	BEZEICHNUNG	DENOMINACIONES
	14020.28043.01 .	0	CONTRAPPESO GR. 20	CONTREPOIDS	COUNTER WEIGHT	GEGENGEWICHT	CONTRAPESO
	14020.28044.01 .	0	CONTRAPPESO GR. 30	CONTREPOIDS	COUNTER WEIGHT	GEGENGEWICHT	CONTRAPESO
	14020.28045.01 .	0	CONTRAPPESO GR. 40	CONTREPOIDS	COUNTER WEIGHT	GEGENGEWICHT	CONTRAPESO

* PER RUOTE FUSE
. ALTERNATIVA

POUR ROUE COULEE
ALTERNATIVE

FOR CAST WHELL
ALTERNATIVE

FUR GUSRAD
WAHLWEISE

PARA RUEDA FONDICIO
ALTERNATIVA

SCATOLA GUIDA
BOITIER DE DIRECTION
STEERING BOX
LENKGEHAUSE
CAJA DE DIRECCION

BURMAN

TAV. 32.01

1	EDIZIONE	APRILE	1974
ed.	EDITION	AVRIL	
st	EDITION	APRIL	
-	AUSGABE	APRIL	
ed.	EDICION	ABRIL	

DATA DELLE AGGIORNAMENTO

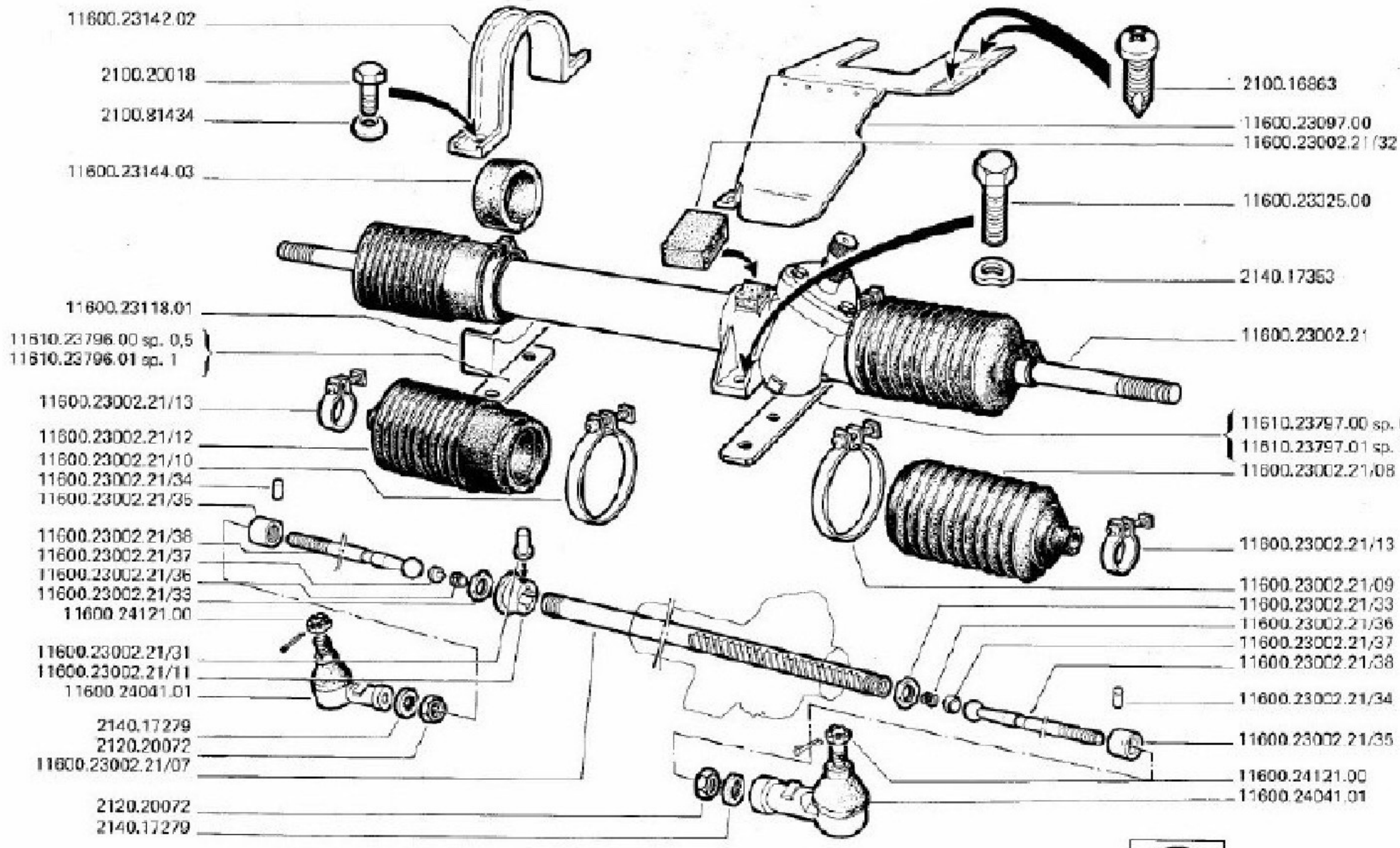

N. 7027

Alfetta GT

TAV. 32.01/0

SCATOLA GUIDA - BURMAN
BOITIER DE DIRECTION
STEERING BOX
LENKGEHAUSE
CAJA DE DIRECCION

MODIFICA	N. ORDINAZIONE	QT	DENOMINAZIONE	DESIGNATION	DESCRIPTION	BENENNUNG	DENOMINACIONES
	2100.16863	2	VITE	VIS	SCREW	SCHRAUBE	TORNILLO
	2100.20018	2	VITE	VIS	SCREW	SCHRAUBE	TORNILLO
	2100.81434	2	RONDELLA	RONDELLE	WASHER	SCHEIBE	ARANDELLA
	2120.20072	2	DADO	ECROU	NUT	MUTTER	TUERCA
	2140.17279	2	RONDELLA	RONDELLE	WASHER	SCHEIBE	ARANDELLA
	2140.17353	2	RONDELLA	RONDELLE	WASHER	SCHEIBE	ARANDELLA
	11600.23002.21	1	SCATOLA GUIDA	BOITIER DE DIRECTION	STEERING BOX ASSY	LENKGEHAEUSE	CARTER DE DIRECCION
	11600.23002.21/07	1	CREMAGLIERA	CREMAILLERE	RACK	ZAHNSTANGE	CREMALLERA
	11600.23002.21/08	1	PROTEZIONE	PROTECTEUR	PROTECTION	SCHUTZ	PROTECCION
	11600.23002.21/09	1	FASCETTA GRANDE	PATTE DE FIXATION	CLAMP	SCHELLE	ABRAZADERA
	11600.23002.21/10	1	FASCETTA GRANDE	PATTE DE FIXATION	CLAMP	SCHELLE	ABRAZADERA
	11600.23002.21/11	1	BOCCOLA	BAGUE	BUSHING	BUECHSE	CASQUILLO
	11600.23002.21/12	1	PROTEZIONE	PROTECTEUR	PROTECTION	SCHUTZ	PROTECCION
	11600.23002.21/13	2	FASCETTA PICCOLA	PATTE DE FIXATION	CLAMP	SCHELLE	ABRAZADERA
	11600.23002.21/31	1	RIVETTO	RIVET	RIVET	NIET	RIVETE
	11600.23002.21/32	1	TAMPONE	BLOC CAOUTCHOUC	RUBBER PAD	PUFFER	TAMPON
	11600.23002.21/33	2	GHIERA	ECROU A ENCOCHES	RING NUT	RINGMUTTER	ARANDELA
	11600.23002.21/34	2	SPINA	GOUPILLE CONIQUE	TAPER PIN	KEGELSTIFT	PASADOR CONICO
	11600.23002.21/35	2	SEDE SFERICO	CUVETTE DE ROTULE	BALL SEAT	KUGELSITZ	ASIENTO ESFERICO
	11600.23002.21/36	2	MOLLA	RESSORT	SPRING	FEDER	RESORTE
	11600.23002.21/37	2	GUIDAMOLLA		WINDOW GUIDE		

SCATOLA GUIDA
BOITIER DE DIRECTION
STEERING BOX
LENKGEHAUSE
CAJA DE DIRECCION

BURMAN

TAV. 32.01

1ª	EDIZIONE	1974	APRILE
1re	EDITION		AVRIL
1st	EDITION		APRIL
1.	AUSGABE		APRIL
1ra	EDICION		ABRIL

11600.23142.02
2100.20018
2100.81434
11600.23144.03
11600.23118.01
11610.23796.00 sp. 0,5
11610.23796.01 sp. 1
11600.23002.21/13
11600.23002.21/12
11600.23002.21/10
11600.23002.21/34
11600.23002.21/35
11600.23002.21/38
11600.23002.21/37
11600.23002.21/36
11600.23002.21/33
11600.24121.00
11600.23002.21/31
11600.23002.21/11
11600.24041.01
2140.17279
2120.20072
11600.23002.21/07
2120.20072
2140.17279

2100.16863
11600.23097.00
11600.23002.21/32
11600.23325.00
2140.17353
11600.23002.21
11610.23797.00 sp. 0,5
11610.23797.01 sp. 1
11600.23002.21/08
11600.23002.21/13
11600.23002.21/09
11600.23002.21/33
11600.23002.21/36
11600.23002.21/37
11600.23002.21/38
11600.23002.21/34
11600.23002.21/35
11600.24121.00
11600.24041.01

TAV. 32.0170

SCATOLA GUIDA - BURMAN
BOITIER DE DIRECTION
STEERING BOX
LENKGEHAUSE
CAJA DE DIRECCION

MODIFICA	N. ORDINAZIONE	QT.	DESIGNAZIONE	DESIGNATION	DESCRIPTION	BENENNUNG	DENOMINACIONES
	11600.23002.21/38	2	TIRANTE	BIELLETTE	ROD	ZUGSTANGE	TIRANTE
	11600.23097.00	1	PROTEZIONE	PROTECTEUR	PROTECTION	SCHUTZ	PROTECCION
	11600.23118.01	1	SPESSORE GOMMA	CALE	SPACER	BEILAGE	ESPESOR
	11600.23142.02	1	SUPPORTO	SUPPORT	SUPPORT	LAGERUNG	SOPORTE
	11600.23144.03	1	ANELLO GOMMA	BAGUE	RING	RING	ANILLO
	11600.23325.00	2	VITE	VIS	SCREW	SCHRAUBE	TORNILLO
	11600.24041.01	2	SNODO	ROTULE	PACKING	GELENK	MANGUETA
	11600.24121.00	2	DADO	ECROU	NUT	MUTTER	TUERCA
	11610.23796.00	1	SPESSORE MM.0,5	CALE	SPACER	BEILAGE	ESPESOR
	11610.23796.01	1	SPESSORE MM.1	CALE	SPACER	BEILAGE	ESPESOR
	11610.23797.00	1	SPESSORE MM.0,5	CALE	SPACER	BEILAGE	ESPESOR
	11610.23797.01	1	SPESSORE MM.1	CALE	SPACER	BEILAGE	ESPESOR

PARTICOLARI DELLA SCATOLA GUIDA
DETAIL DU BOITIER DE DIRECTION
STEERING BOX HARDWARE
EINZELTEILE DES LENKGEHAUSES
PIEZAS DE LA CAJA DE DIRECCION

BURMAN

TAV. 32.02

1ª EDIZIONE 1974 APRILE
1re EDITION 1974 AVRIL
1st EDITION 1974 APRIL
1. AUSGABE 1974 APRIL
1ª EDICION 1974 ABRIL

DATA ULTIMO AGGIORNAMENTO

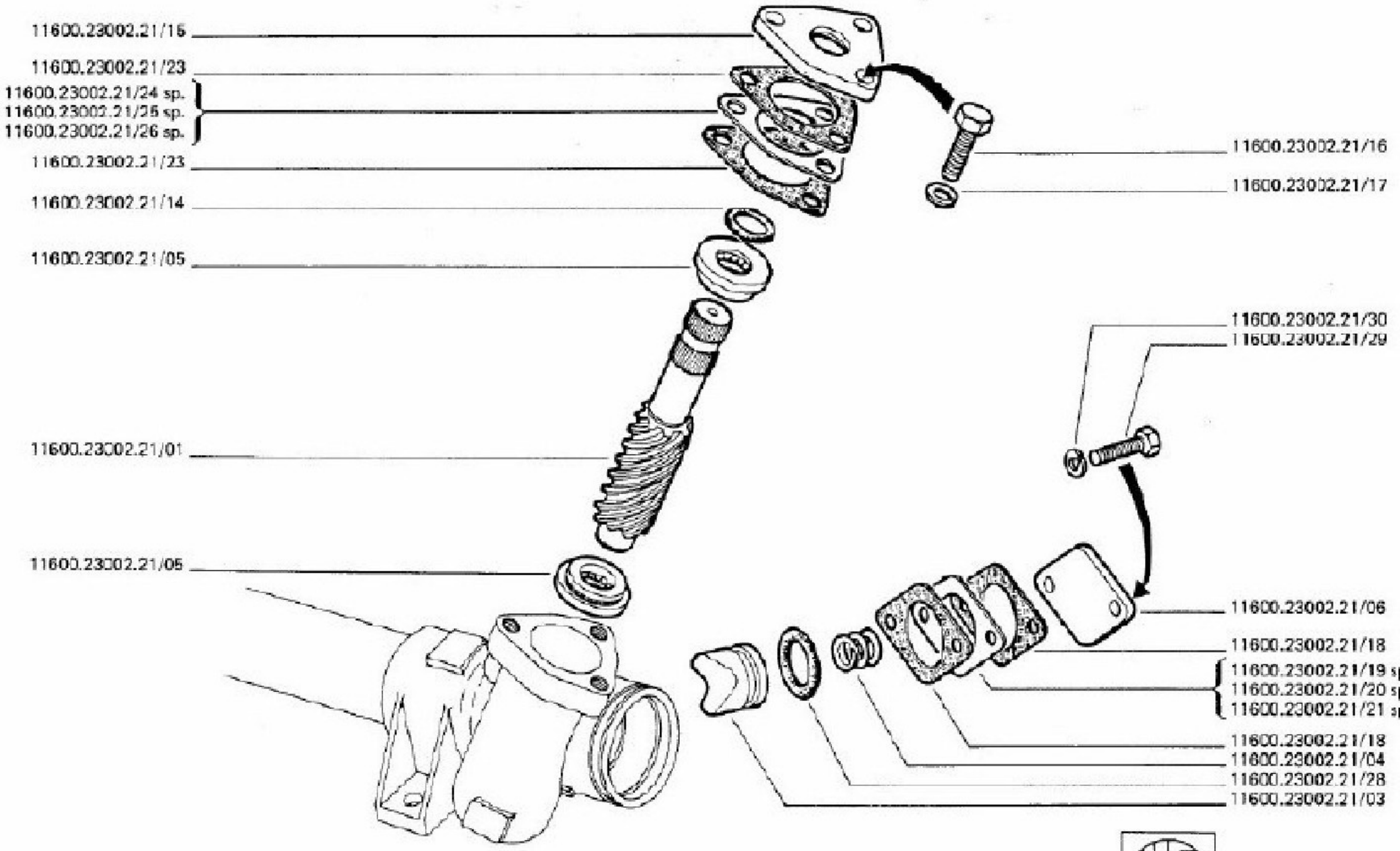

TAV. 32.02/0

PARTICOLARI DELLA SCATOLA GUIDA - BURMAN
DETAIL DU BOITIER DE DIRECTION
STEERING BOX HARDWARE
EINZELTEILE DES LENKGEHAUSES
PIEZAS DE LA CAJA DE DIRECCION

MODIFICA	N. ORDINAZIONE	QT.	DENOMINAZIONE	DESIGNATION	DESCRIPTION	BENENNUNG	DENOMINACIONES
	11600.23002.21/01	1	ALBERINO	AXE FIXE	FIXED SPINDLE	FESTER BOLZEN	EJE FIJO
	11600.23002.21/03	1	BOCCOLA	BAGUE	BUSHING	BUECHSE	CASQUILLO
	11600.23002.21/04	1	MOLLA	RESSORT	SPRING	FEDER	RESORTE
	11600.23002.21/05	2	CUSCINETTO	ROULEMENT AIGUILLES	NEEDLE BEARING	NADELLAGER	COJINETE DE AGUJAS
	11600.23002.21/06	1	COPERCHIETTO	COUVERCLE	COVER	DECKEL	TAPA
	11600.23002.21/14	1	ANELLO TENUTA	JOINT	SEAL	DICHTRING	JUNTA
	11600.23002.21/15	1	COPERCHIETTO SUP.	COUVERCLE	COVER	DECKEL	TAPA
	11600.23002.21/16	3	VITE	VIS	SCREW	SCHRAUBE	TORNILLO
	11600.23002.21/17	3	RONDELLA	RONDELLE	WASHER	SCHEIBE	ARANDELLA
	11600.23002.21/18	2	GUARNIZIONE	JOINT D ETANCHEITE	SEAL	DICHTUNG	GUARNICION
	11600.23002.21/19	1	SPESSORE MM	CALE	SPACER	BEILAGE	ESPESOR
	11600.23002.21/20	1	SPESSORE MM	CALE	SPACER	BEILAGE	ESPESOR
	11600.23002.21/21	1	SPESSORE MM	CALE	SPACER	BEILAGE	ESPESOR
	11600.23002.21/23	1	GUARNIZIONE	JOINT D ETANCHEITE	SEAL	DICHTUNG	GUARNICION
	11600.23002.21/24	2	SPESSORE MM	CALE	SPACER	BEILAGE	ESPESOR
	11600.23002.21/25	1	SPESSORE MM	CALE	SPACER	BEILAGE	ESPESOR
	11600.23002.21/26	1	SPESSORE MM	CALE	SPACER	BEILAGE	ESPESOR
	11600.23002.21/28	1	ANELLO TENUTA	JOINT	SEAL	DICHTRING	JUNTA
	11600.23002.21/29	2	VITE	VIS	SCREW	SCHRAUBE	TORNILLO
	11600.23002.21/30	2	RONDELLA	RONDELLE	WASHER	SCHEIBE	ARANDELLA

SCATOLA GUIDA
BOITIER DE DIRECTION
STEERING BOX
LENKGEHÄUSE
CAJA DE DIRECCION

2.F.

TAV. 32.03

1	ª EDIZIONE	1974	APRILE	
	ème EDITION		APRIL	
	st EDITION		APRIL	
	ª AUSGABE		APRIL	
	ma EDICION		ABRIL	

11600.23142.02
2100.20018
2100.81434
11600.23144.03
11600.23002.24 g. s.
11602.23002.02 g. d.
11600.23118.01
11610.23796.00 sp. 0,5
11610.23796.01 sp. 1
11600.23002.22/08
11600.23002.22/13
11600.23002.22/11
11600.23002.22/09
11600.24040.00
11600.24121.00
11600.24041.01
2140.17279
2120.20072

2100.16863 g. s.
11600.23097.00 g. s.
11600.23783.00
11600.23325.00
2140.17353
11610.23797.00 sp. 0,5
11610.23797.01 sp. 1
11600.23002.24/10
11600.23002.22/08
11600.23002.22/13
11600.23002.22/07 g.s.
11602.23002.02/07 g.d.
11600.23002.22/09
11600.24040.00
11600.24121.00
11600.24041.01
2140.17279

N. 5945

Alfetta GT

TAV. 32.03/0

SCATOLA GUIDA - ZF
BOITIER DE DIRECTION
STEERING BOX
LENKGEHAUSE
CAJA DE DIRECCION

MODIFICA	N. ORDINAZIONE	QT.	DENOMINAZIONE	DESIGNATION	DESCRIPTION	BENENNUNG	DENOMINACIONES
	2100.16863 *	2	VITE	VIS	SCREW	SCHRAUBE	TORNILLO
	2100.20018	2	VITE	VIS	SCREW	SCHRAUBE	TORNILLO
	2100.81434	2	RONDELLA	RONDELLE	WASHER	SCHEIBE	ARANDELLA
	2120.20072	2	DADO	ECROU	NUT	MUTTER	TUERCA
	2140.17279	2	RONDELLA	RONDELLE	WASHER	SCHEIBE	ARANDELLA
	2140.17353	2	RONDELLA	RONDELLE	WASHER	SCHEIBE	ARANDELLA
	11600.23002.22/07*	1	CREMAGLIERA	CREMAILLERE	RACK	ZAHNSTANGE	CREMALLERA
	11600.23002.22/08	2	PROTEZIONE	PROTECTEUR	PROTECTION	SCHUTZ	PROTECCION
	11600.23002.22/09	2	RONDELLA	RONDELLE	WASHER	SCHEIBE	ARANDELLA
	11600.23002.22/11	2	BOCCOLA	BAGUE	BEARING	LAGERBUESCHSE	CASQUILLO
	11600.23002.22/13	2	ANELLO	BAGUE	RING	RING	ANILLO
	11600.23002.24 *	1	SCATOLA GUIDA	BOITIER DE DIRECTION	STEERING BOX ASSY	LENKGEHAEUSE	CARTER DE DIRECCION
	11600.23002.24/10	2	ANELLO	BAGUE	RING	RING	ANILLO
	11600.23097.00 *	1	PROTEZIONE	PROTECTEUR	PROTECTION	SCHUTZ	PROTECCION
	11600.23118.01	1	SPESSORE	CALE	SPACER	BEILAGE	ESPESOR
	11600.23142.02	1	SUPPORTO	SUPPORT	SUPPORT	LAGERUNG	SOPORTE
	11600.23144.03	1	GOMMINO	BAGUE	RING	RING	ANILLO
	11600.23325.00	2	VITE	VIS	SCREW	SCHRAUBE	TORNILLO
	11600.23783.00	1	TAMPONE	BLOC CAOUTCHOUC	RUBBER PAD	PUFFER	TAMPON
	11600.24040.00	2	TIRANTE	BIELLETTE	ROD	ZUGSTANGE	TIRANTE
	11600.24041.01	2	SNODO	ROTULE	PACKING	GELENK	MANGUETA

SCATOLA GUIDA
BOITIER DE DIRECTION
STEERING BOX
LENKGEHÄUSE
CAJA DE DIRECCION

Z.F.

TAV. 32.03

1ª EDIZIONE APRILE 1974
1ère EDITION AVRIL
1st EDITION APRIL
1. AUFLAGE APRIL
1ra EDICION ABRIL

11600.23142.02
2100.20018
2100.81434
11600.23144.03
11600.23002.24 g. s.
11602.23002.02 g. d.
11600.23118.01
11610.23796.00 sp. 0,5
11610.23796.01 sp. 1
11600.23002.22/08
11600.23002.22/13
11600.23002.22/11
11600.23002.22/09
11600.24040.00
11600.24121.00
11600.24041.01
2140.17279
2120.20072

2100.16863 g. s.
11600.23097.00 g. s.
11600.23783.00
11600.23325.00
2140.17353
11610.23797.00 sp. 0,5
11610.23797.01 sp. 1
11600.23002.24/10
11600.23002.22/08
11600.23002.22/13
11600.23002.22/07 g.s.
11602.23002.02/07 g.d.
11600.23002.22/09
11600.24040.00
11600.24121.00
11600.24041.01
2140.17279

TAV. 32.03/0

SCATOLA GUIDA - ZF
BOITIER DE DIRECTION
STEERING BOX
LENKGEHAUSE
CAJA DE DIRECCION

MODIFICA	N. ORDINAZIONE	QT.	DENOMINAZIONE	DÉSIGNATION	DESCRIPTION	BENENNUNG	DENOMINACIONES
	11600.24121.00	2	DADO	ECROU	NUT	MUTTER	TUERCA
	11602.23002.02 *	1	SCATOLA GUIDA	BOITIER DE DIRECTION	STEERING BOX ASSY	LENKGEHAEUSE	CARTER DE DIRECCION
	11602.23002.02/07_	1	CREMAGLIERA	CREMAILLERE	RACK	ZAHNSTANGE	CREMALLERA
	11610.23796.00	0	SPESSORE MM. 0,5	CALE	SPACER	BEILAGE	ESPESOR
	11610.23796.01	0	SPESSORE MM. 1	CALE	SPACER	BEILAGE	ESPESOR
	11610.23797.00	0	SPESSORE MM. 0,5	CALE	SPACER	BEILAGE	ESPESOR
	11610.23797.01	0	SPESSORE MM. 1	CALE	SPACER	BEILAGE	ESPESOR

* PER G.S.
* PER G.D.

PARTICOLARI DELLA SCATOLA GUIDA
DETAIL DE LA DIRECTION
STEERING BOX HARDWARE
EINZELTEILE DES LENKGEHÄUSES
PIEZAS DE LA CAJA DE DIRECCION

Z.F.

TAV. 32.04

1ª	EDIZIONE	APRILE	1974
ère	EDITION	AVRIL	
st	EDITION	APRIL	
.	AUSGABE	APRIL	
ero	EDICIÓN	ABRIL	

DATA DELL'EVENTUALE AGGIORNAMENTO

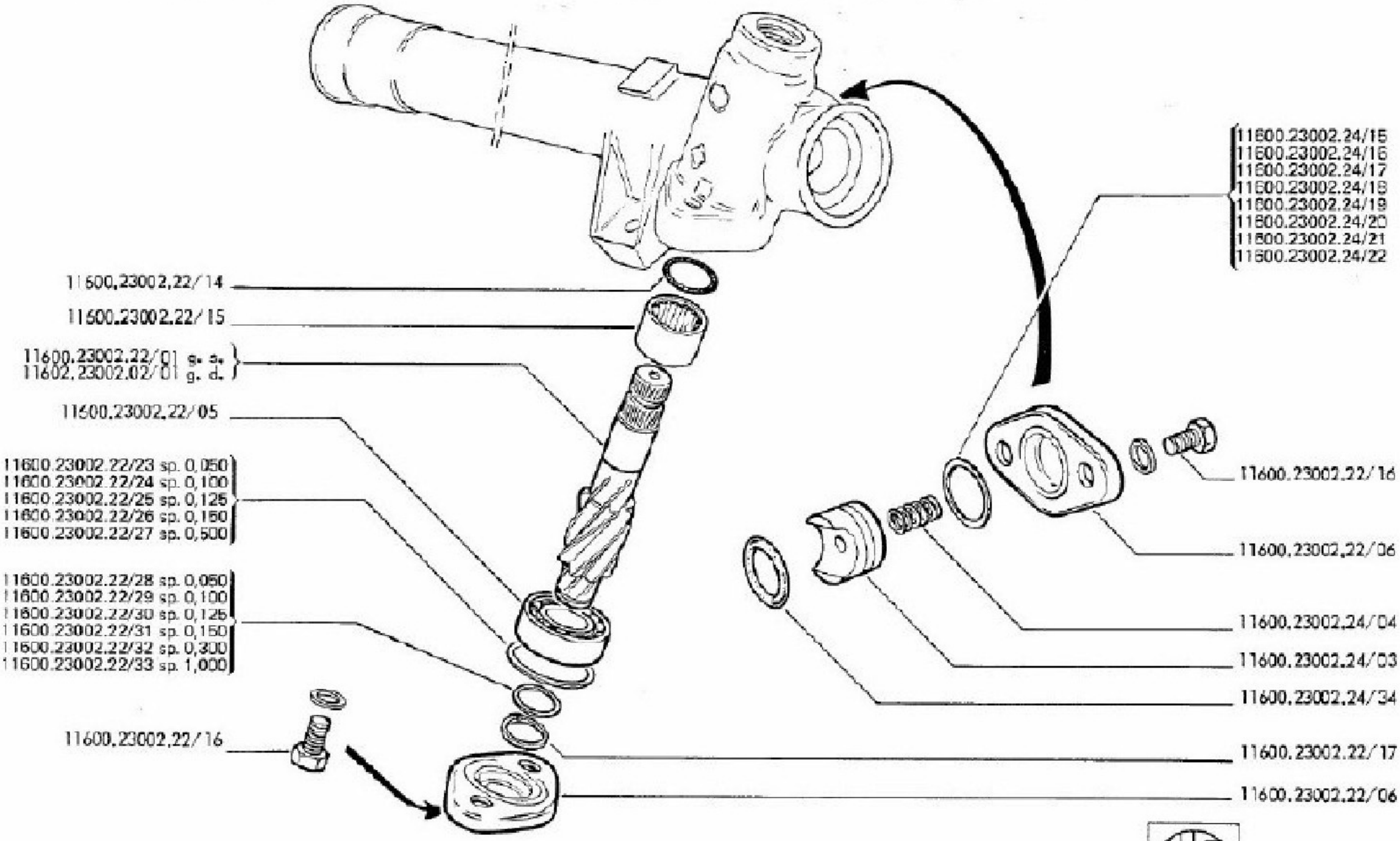

N. 6044/0

TAV. 32.04/0 PARTICOLARI DELLA SCATOLA GUIDA - ZF
DETAIL DU BOITIER DE DIRECTION
STEERING BOX HARDWARE
EINZELTEILE DES LENKGEHAUSES
PIEZAS DE LA CAJA DE DIRECCION

MODIFICA	N. ORDINAZIONE	QT.	DENOMINAZIONE	DESIGNATION	DESCRIPTION	BEZEICHNUNG	DENOMINACIONES
	11600.23002.22/01*	1	ALBERINO	AXE	SPINDLE	WELLE	EJE
	11600.23002.22/05	1	CUSCINETTO	COUSSINET DE PALIER	JOURNAL BEARING	ACHSLAGER	COJINETE LISO
	11600.23002.22/06	2	COPERCHIETTO	COUVERCLE	COVER	DECKEL	TAPA
	11600.23002.22/14	1	ANELLO TENUTA	JOINT	SEAL	DICHTRING	JUNTA
	11600.23002.22/15	1	BOCCOLA	BAGUE	BUSHING	BUECHSE	CASQUILLO
	11600.23002.22/16	4	VITE	VIS	SCREW	SCHRAUBE	TORNILLO
	11600.23002.22/17	1	ANELLO ELASTICO	CIRCLIP	CIRCLIP	SPRENGRING	CLIP
	11600.23002.22/23	0	RASAMENTO SP.0,050	BAGUE	SHIM	AUSGLEICH	ALISAMENTO
	11600.23002.22/24	0	RASAMENTO SP. 0,100	BAGUE	SHIM	AUSGLEICH	ALISAMENTO
	11600.23002.22/25	0	RASAMENTO SP. 0,125	BAGUE	SHIM	AUSGLEICH	ALISAMENTO
	11600.23002.22/26	0	RASAMENTO SP. 0,150	BAGUE	SHIM	AUSGLEICH	ALISAMENTO
	11600.23002.22/27	0	RASAMENTO SP. 0,500	BAGUE	SHIM	AUSGLEICH	ALISAMENTO
	11600.23002.22/28	0	RASAMENTO SP. 0,050	BAGUE	SHIM	AUSGLEICH	ALISAMENTO
	11600.23002.22/29	0	RASAMENTO SP. 0,100	BAGUE	SHIM	AUSGLEICH	ALISAMENTO
	11600.23002.22/30	0	RASAMENTO SP. 0,125	BAGUE	SHIM	AUSGLEICH	ALISAMENTO
	11600.23002.22/31	0	RASAMENTO SP. 0,150	BAGUE	SHIM	AUSGLEICH	ALISAMENTO
	11600.23002.22/32	0	RASAMENTO SP. 0,300	BAGUE	SHIM	AUSGLEICH	ALISAMENTO
	11600.23002.22/33	0	RASAMENTO SP. 1,000	BAGUE	SHIM	AUSGLEICH	ALISAMENTO
	11600.23002.24/03	1	BOCCOLA	BAGUE	BUSHING	BUECHSE	CASQUILLO
	11600.23002.24/04	1	MOLLA	RESSORT	SPRING	FEDER	RESORTE
	11600.23002.24/15	0	RASAMENTO SP.	BAGUE	SHIM	AUSGLEICH	ALISAMENTO

PARTICOLARI DELLA SCATOLA GUIDA
DETAIL DE LA DIRECTION
STEERING BOX HARDWARE
EINZELTEILE DES LENKGEHÄUSES
PIEZAS DE LA CAJA DE DIRECCION

Z.F.

TAV. 32.04

1ª	EDIZIONE	1974	APRILE	DATA ULTIMO AGGIORNAMENTO
2ª	EDITION		AVRIL	
3ª	EDITION		APRIL	
4ª	AUSGABE		APRIL	
5ª	EDICION		ABRIL	

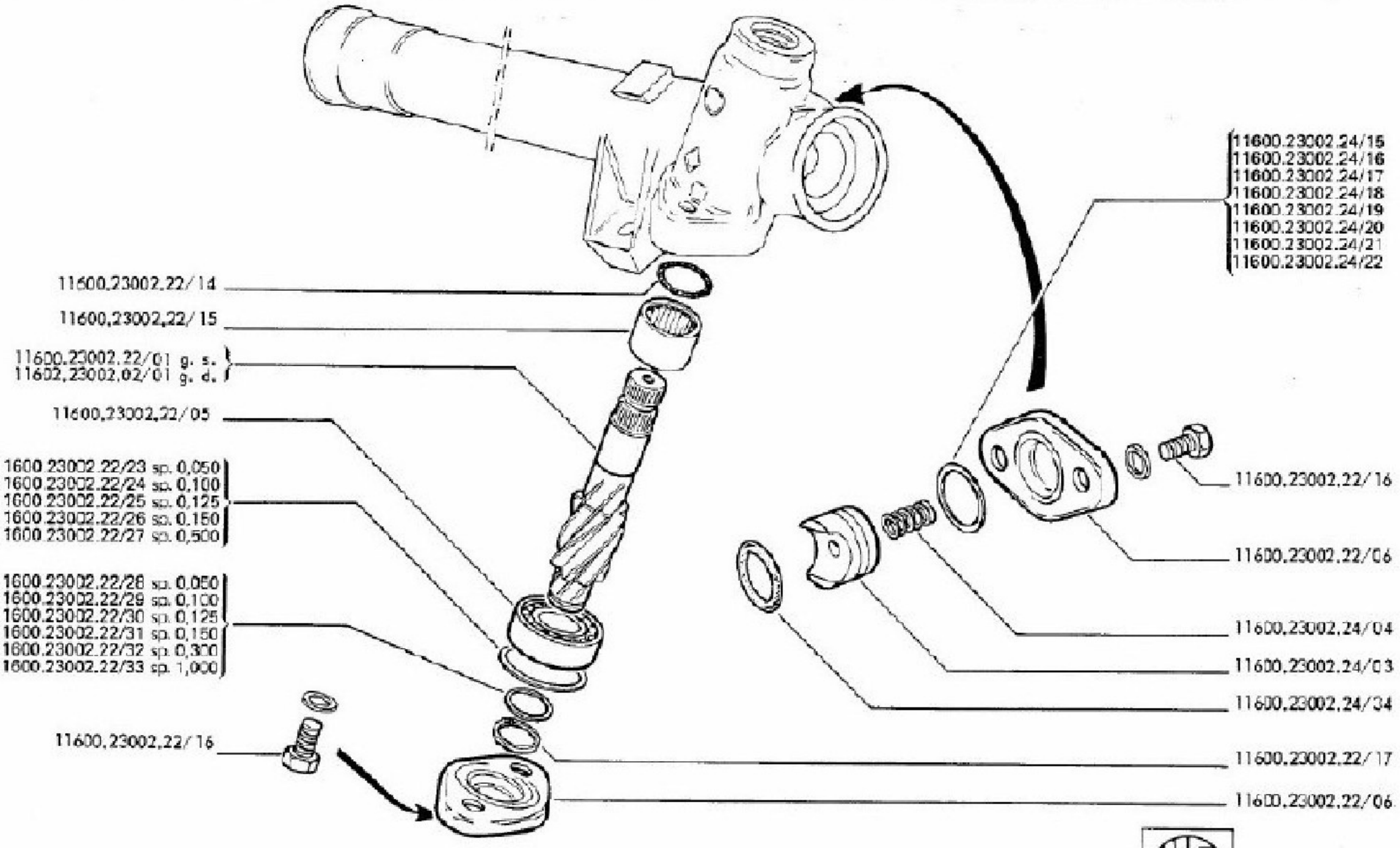

N. 5044/0

Alfetta GT

TAV. 32.04/0 PARTICOLARI DELLA SCATOLA GUIDA - ZF
DETAIL DU BOITIER DE DIRECTION
STEERING BOX HARDWARE
EINZELTEILE DES LENKGEHAUSES
PIEZAS DE LA CAJA DE DIRECCION

MODIFICA	N. ORDINAZIONE	QT.	DENOMINAZIONE	DESIGNATION	DESCRIPTION	BENENNUNG	DENOMINACIONES
	11600.23002.24/16	0	RASAMENTO SP.	BAGUE	SHIM	AUSGLEICH	ALISAMENTO
	11600.23002.24/17	0	RASAMENTO SP.	BAGUE	SHIM	AUSGLEICH	ALISAMENTO
	11600.23002.24/18	0	RASAMENTO SP.	BAGUE	SHIM	AUSGLEICH	ALISAMENTO
	11600.23002.24/19	0	RASAMENTO SP.	BAGUE	SHIM	AUSGLEICH	ALISAMENTO
	11600.23002.24/20	0	RASAMENTO SP.	BAGUE	SHIM	AUSGLEICH	ALISAMENTO
	11600.23002.24/21	0	RASAMENTO SP.	BAGUE	SHIM	AUSGLEICH	ALISAMENTO
	11600.23002.24/22	0	RASAMENTO SP.	BAGUE	SHIM	AUSGLEICH	ALISAMENTO
	11600.23002.24/34	1	ANELLO OR	JOINT	SEAL	DICHTRING	JUNTA
	11602.23002.02/01.	1	ALBERINO	AXE	SPINDLE	WELLE	EJE

* PER G.S.
. PER G.D.

VOLANTE GUIDA E GRUPPO COMANDI
VOLANT DE DIRECTION ET COMODO
STEERING WHEEL & SWITCH UNIT
LENKRAD UND KOMBI-INSTRUMENT
VOLANTE GUIA Y GRUPO MANDOS

TAV. 32.10

1ª	EDIZIONE	1974	APRILE	DATA REVISIONE / AGGIORNAMENTO
1st	EDITION		AVRIL	
1st	EDITION		APRIL	
1.	AUSGABE		APRIL	
1ª	EDICION		ABRIL	

2100.13274
11600.23196.00
2100.81405
2120.15026
11610.23101.00 g. s.
11611.23101.00 g. d.
11610.23102.00
2100.04111
2100.04119
11608.23577.00
11608.23084.00
11608.23571.00
11608.23572.00
11608.23747.00

11608.23052.02 g. s.
11601.23052.00 g. d. S-N-
2120.20073
2140.16810
11610.23070.00 g. s.
11608.23070.00 g. d.
11610.23070.01 g. s.
11611.23070.00 g. d.
11608.23578.00
11608.23062.00
11608.23057.00
11608.23072.00
11608.23701.00

N. 5983

Alfetta GT

TAV. 32.10/0

VOLANTE GUIDA E GRUPPO COMANDI
VOLANT DE DIRECTION ET COMODO
STEERING WHEEL & SWITCH UNIT
LENKRAD UND KOMBI-INSTRUMENT
VOLANTE GUIA Y GRUPO MANDOS

MODIFICA	N. ORDINAZIONE	QT.	DENOMINAZIONE	DESIGNATION	DESCRIPTION	BEMENNUNG	DENOMINACIONES
	2100.04111	3	VITE	VIS	SCREW	SCHRAUBE	TORNILLO
	2100.04119	2	VITE	VIS	SCREW	SCHRAUBE	TORNILLO
	2100.13274	2	VITE	VIS	SCREW	SCHRAUBE	TORNILLO
	2100.81405	2	RONDELLA	RONDELLE	WASHER	SCHEIBE	ARANDELLA
	2120.15026	2	DADO	ECROU	NUT	MUTTER	TUERCA
	2120.20073	1	DADO	ECROU	NUT	MUTTER	TUERCA
	2140.14810	1	RONDELLA	RONDELLE	WASHER	SCHEIBE	ARANDELLA
	11600.23196.00	1	ANELLO GOMMA	JOINT	SEAL	DICHTRING	JUNTA
	11601.23052.00	1	VOLANTE G.D.	VOLANT	STEERING WHEEL	LENKRAD	VOLANTE
	11608.23052.02	1	VOLANTE G.S.	VOLANT	STEERING WHEEL	LENKRAD	VOLANTE
	11608.23057.00	1	COPRIMOZZO	ENJOLIVEUR	HUB CAP	NABENKAPPE	CUBRECUBO
	11608.23062.00	1	COPRIRAZZE	COUVRE-BRANCHES	SPOKE COVER	LENKRADBELAG	CUBRERRAYOS
	11608.23072.00	3	PULSANTE	BOUTON-POUSSOIR	PUSH BUTTON	DRUCKKNOPF	PULSANTE
	11608.23084.00	1	COPRIMOZZO INF.	ENJOLIVEUR	HUB CAP	NABENKAPPE	CUBRECUBO
	11608.23571.00	1	ANELLO SPES.GOMMA	JOINT	SEAL	DICHTRING	JUNTA
	11608.23572.00	1	RONDELLA	RONDELLE	WASHER	SCHEIBE	ARANDELLA
	11608.23577.00	3	VITE	VIS	SCREW	SCHRAUBE	TORNILLO
	11608.23578.00	3	VITE	VIS	SCREW	SCHRAUBE	TORNILLO
	11608.23701.00	3	MOLLETTA	AGRAFE	CLIP	KLEMMSTUECK	MUELLECITO
	11608.23747.00	1	ANELLO ELASTICO	JONC DE RETENUE	RETAINER RING	SPRENGRING	ANILLO ELASTICO
	11609.23070.00	1	DEVIOGUIDA G.D.	COMMUTATEUR	SWITCH UNIT	LICHT SCHALTER	COMMUTADOR

VOLANTE GUIDA E GRUPPO COMANDI
VOLANT DE DIRECTION ET COMODO
STEERING WHEEL & SWITCH UNIT
LENKRAD UND KOMBI-INSTRUMENT
VOLANTE GUIA Y GRUPO MANDOS

TAV. 32.10

1a	EDIZIONE	1974	APRILE
1ere	EDITION		ANRIL
1ste	EDITION		APRIL
1.	AUSGABE		APRIL
1era	EDICION		ABRIL

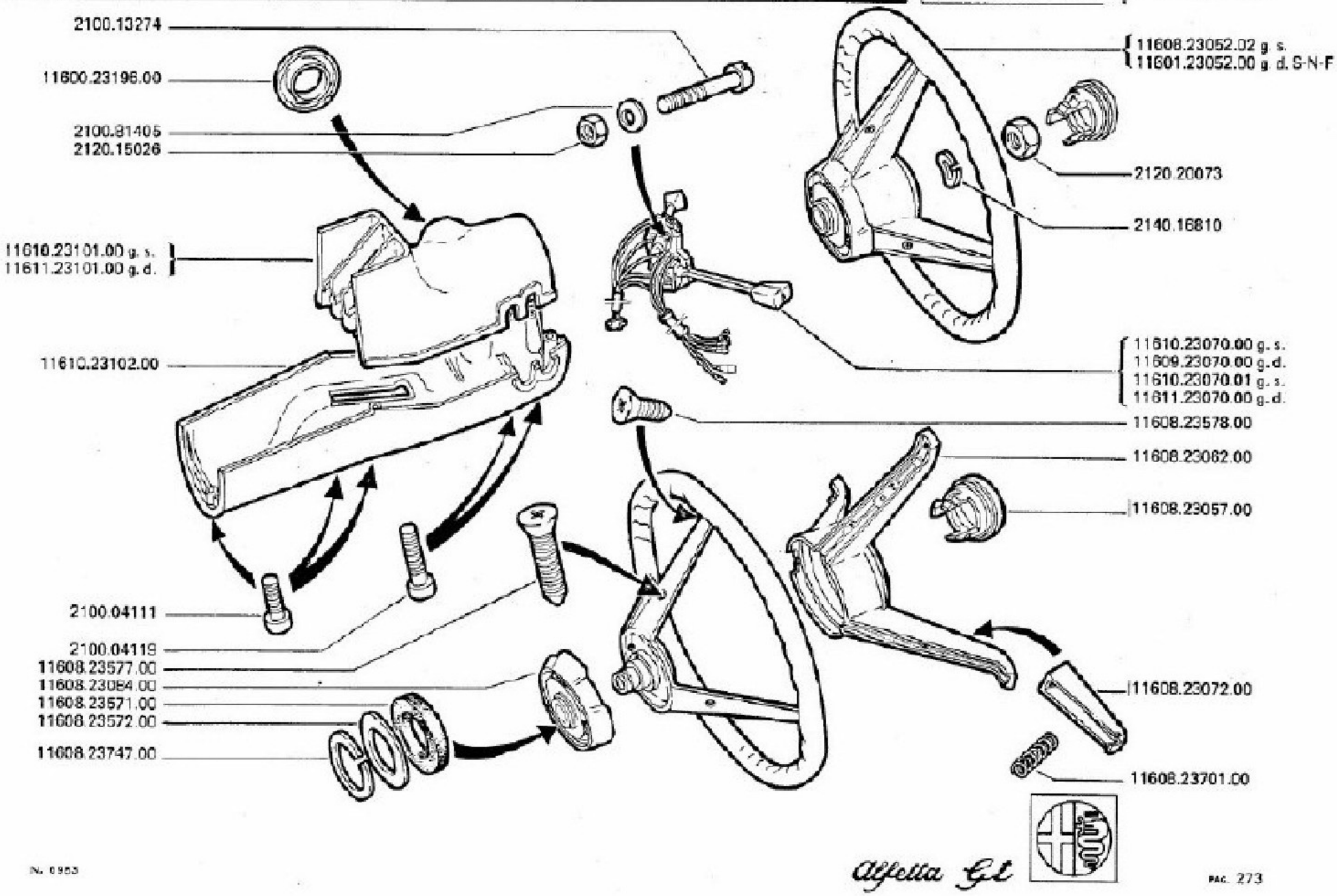

TAV. 32.10/0

VOLANTE GUIDA E GRUPPO COMANDI
VOLANT DE DIRECTION ET COMODO
STEERING WHEEL & SWITCH UNIT
LENKRAD UND KOMBI-INSTRUMENT
VOLANTE GUIA Y GRUPO MANDOS

MODIFICA	N. ORDINAZIONE	QT.	DENOMINAZIONE	DESIGNATION	DESCRIPTION	BENENNUNG	DENOMINACIONES
	11610.23070.00 .	1	DEVIOGUIDA G.S.	COMMUTATEUR	SWITCH UNIT	LICHT SCHALTER	COMMUTADOR
	11610.23070.01 .	1	DEVIOGUIDA G.S.	COMMUTATEUR	SWITCH UNIT	LICHT SCHALTER	COMMUTADOR
	11610.23101.00	1	SEMISCATOLA SUP.G.S.	DEMI-COQUILLE	HALF JACKET	GEHAEUSEHAELFTE	SEMICARTER
	11610.23102.00	1	SEMISCATOLA INF.	DEMI-COQUILLE	HALF JACKET	GEHAEUSEHAELFTE	SEMICARTER
	11611.23070.00 .	1	DEVIOGUIDA G.D.	COMMUTATEUR	SWITCH UNIT	LICHT SCHALTER	COMMUTADOR
	11611.23101.00	1	SEMISCATOLA SUP.G.D.	DEMI-COQUILLE	HALF JACKET	GEHAEUSEHAELFTE	SEMICARTER

* S-N-F
. ALTERNATIVA ALTERNATIVE ALTERNATIVE WAHLWEISE ALTERNATIVA

SUPPORTO E PIANTONE GUIDA
SUPPORT ET COLONNE DE DIRECTION
STEERING COLUMN & BRACKET
LAGERBOCK UND LENKSTÜTZROHR
SOPORTE Y COLUMNA GUIA

TAV. 32.11

1ª	EDIZIONE	APRILE	1974	DATA AGGIORNAMENTO
1ère	EDITION	AVRIL		
1st	EDITION	APRIL		
1.	AUSGABE	APRIL		
1era	EDICION	ABRIL		

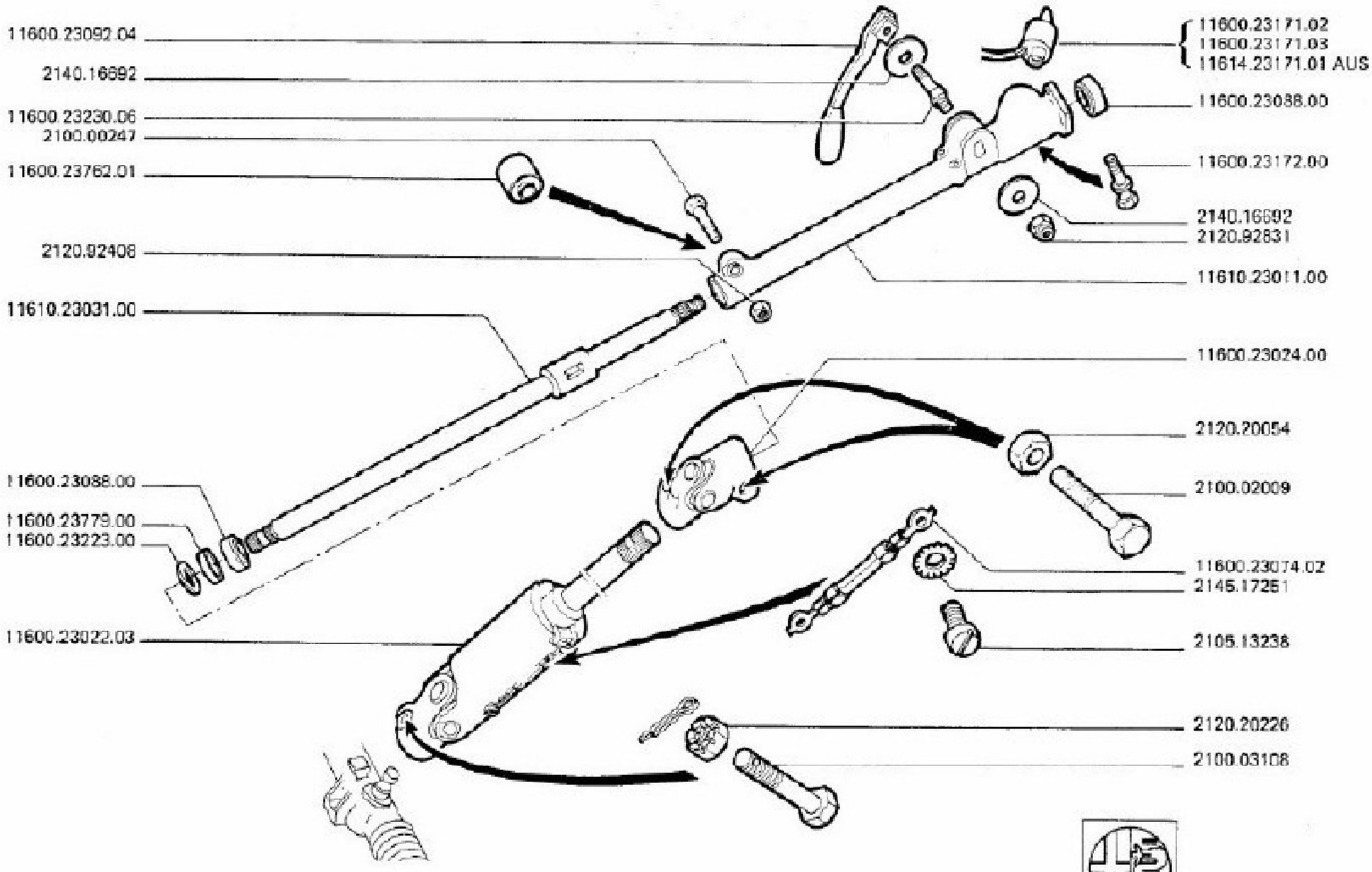

TAV. 32.1170

SUPPORTO E PIANTONE GUIDA
SUPPORT ET COLONNE DE DIRECTION
STEERING COLUMN & BRACKET
LAGERBOCK UND LENKSTUTZROHR
SOPORTE Y COLUMNA GUIA

NODITICA	N. ORDINAZIONE	QT.	DENOMINAZIONE	DESIGNATION	DESCRIPTION	BENENNUNG	DENOMINACIONES
	2100.00247	1	VITE	VIS	SCREW	SCHRAUBE	TORNILLO
	2100.02009	2	VITE	VIS	SCREW	SCHRAUBE	TORNILLO
	2100.03108	1	VITE	VIS	SCREW	SCHRAUBE	TORNILLO
	2105.13238	2	VITE	VIS	SCREW	SCHRAUBE	TORNILLO
	2120.20054	2	DADO	ECROU	NUT	MUTTER	TUERCA
	2120.20226	1	DADO	ECROU	NUT	MUTTER	TUERCA
	2120.92408	1	DADO	ECROU	NUT	MUTTER	TUERCA
	2120.92831	1	DADO	ECROU	NUT	MUTTER	TUERCA
	2140.16692	2	RONDELLA	RONDELLE	WASHER	SCHEIBE	ARANDELLA
	2145.17251	2	RONDELLA	RONDELLE	WASHER	SCHEIBE	ARANDELLA
	11600.23022.03	1	ALBERINO	AXE	SPINDLE	WELLE	EJE
	11600.23024.00	1	SNODO	ROTULE	PACKING	GELENK	MANGUETA
	11600.23074.02	1	CAVO MASSA	CABLE DE MASSE	EARTH CABLE	MASSEKABEL	CABLE DE MASA
	11600.23088.00	2	BOCCOLA	BAGUE	BEARING	LAGERBUESCHSE	CASQUILLO
	11600.23092.04	1	LEVA	LEVIER	LEVER	HEBEL	PALANCA
	11600.23171.02	1	BLOCCASTERZO SIPEA	ANTIVOL	STEERING BLOCK	LENKSCHLOSS	BLOQUEADIRECCION
	11600.23171.03	1	BLOCCASTERZO NEIMAN	ANTIVOL	STEERING BLOCK	LENKSCHLOSS	BLOQUEADIRECCION
	11600.23172.00	1	VITE	VIS	SCREW	SCHRAUBE	TORNILLO
	11600.23223.00	2	RONDELLA	RONDELLE	WASHER	SCHEIBE	ARANDELLA
	11600.23230.06	1	PERNO	AXE	PIVOT PIN	ZAPFEN	PERNO
	11600.23762.01	1	SILENTBLOC	SILENTBLOC	SILENTBLOCK	SILENTBLOCK	SILENTBLOC

SUPPORTO E PIANTONE GUIDA
SUPPORT ET COLONNE DE DIRECTION
STEERING COLUMN & BRACKET
LAGERBOCK UND LENKSTÜTZROHR
SOPORTE Y COLUMNA GUIA

TAV. 32.11

1ª	EDIZIONE	APRILE	1974	
1st	EDITION	AVRIL		
1st	EDITION	APRIL		
1.	AUSGABE	APRIL		
1ª	EDICION	ABRIL		

DATA REVISIONE / REVISION DATE / REVISIONSDATUM / FECHA REVISION

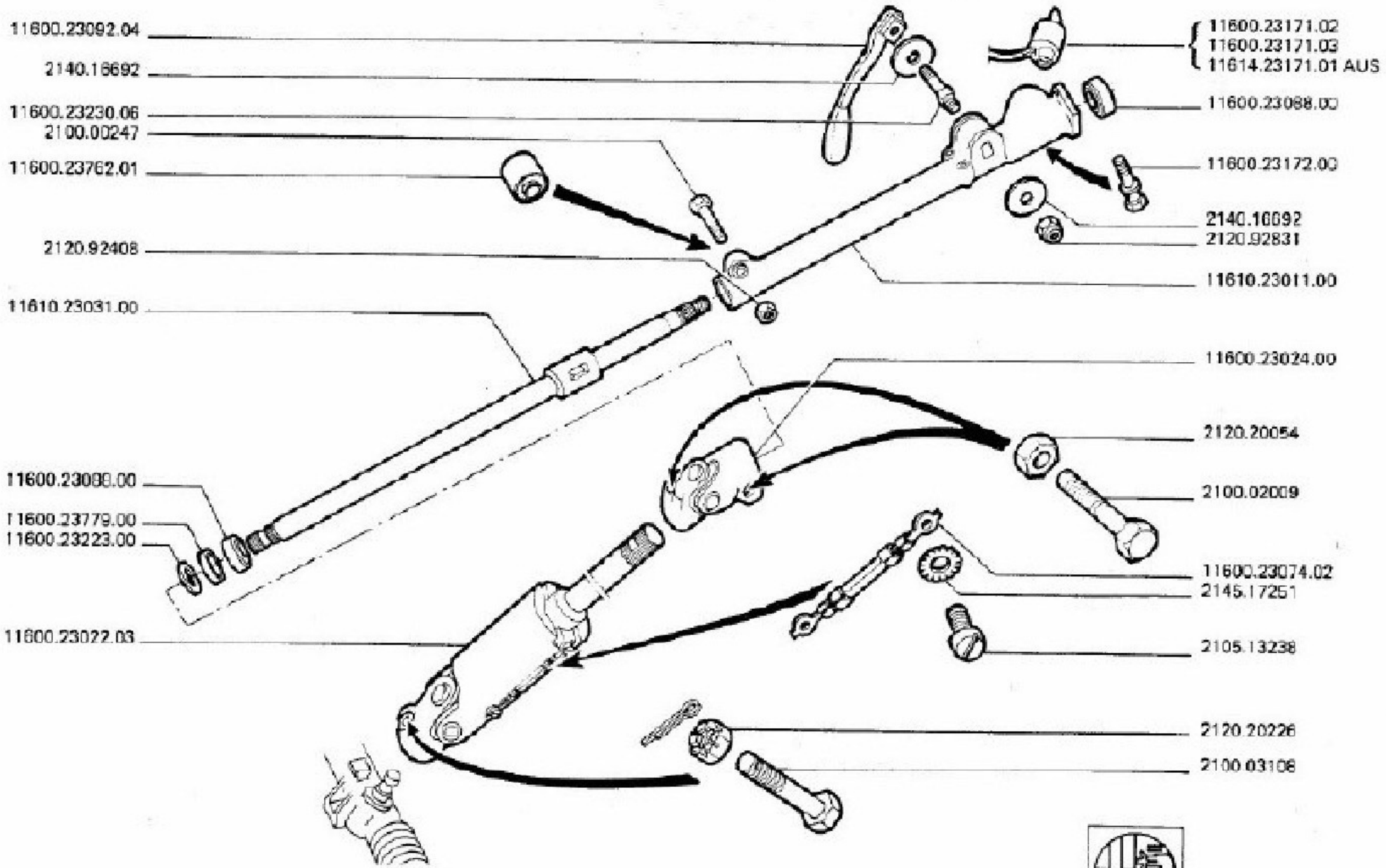

N. 6950

Alfetta GT

TAV. 32.11/D

SUPPORTO E PIANTONE GUIDA
SUPPORT ET COLONNE DE DIRECTION
STEERING COLUMN & BRACKET
LAGERBOCK UND LENKSTUTZROHR
SOPORTE Y COLUMNA GUIA

MODIFICA	N. ORDINAZIONE	QT.	DENOMINAZIONE	DÉSIGNATION	DESCRIPTION	BENENNUNG	DENOMINACIONES
	11600.23779.00	1	COPERCHIETTO	COUVERCLE	COVER	DECKEL	TAPA
	11610.23011.00	1	SUPPORTO	SUPPORT	SUPPORT	LAGERUNG	SOPORTE
	11610.23031.00	1	PIANTONE GUIDA	COLONNE DE DIRECTION	STEERING COLUMN	LENKSPINDELROHR	BARRA DE DIRECCION
	11614.23171.01	* 1	BLOCCASTERZO SIPEA	ANTIVOL	STEERING BLOCK	LENKSCHLOSS	BLOQUEADIRECCION

* DA

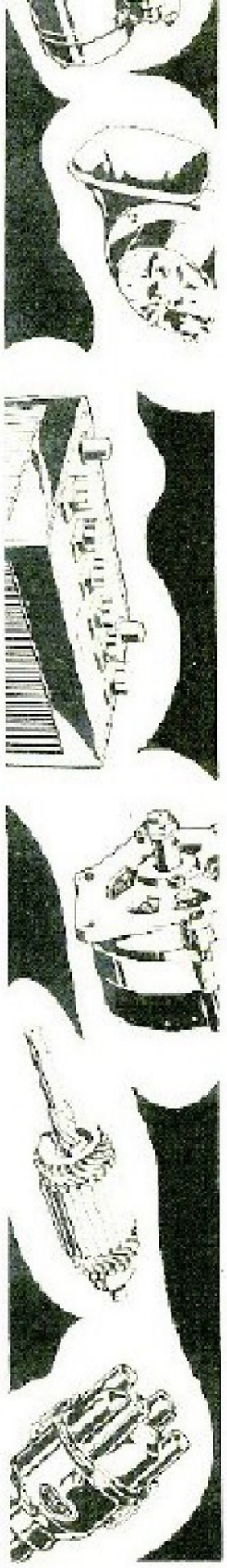

ÉQUIPEMENT ÉLECTRIQUE
ELECTRICAL UNITS
ELEKTRISCHE ANLAGE
GRUPOS ELECTRICOS

GRUPPI ELETTRICI

INDICE DELLE TAVOLE
REPERTOIRE DES PLANCHES
INDEX OF TABLES
TAFELVERZEICHNIS
INDICE DE LAMINAS

DENOMINAZIONE	DESIGNATION	DESCRIPTION	BENENNUNG	DENOMINACIONES	TAV	PAG
PARTICOLARI DEL DISTRIBUTORE-BOBINA CAVI E CANDELE	DETAIL DU DISTRIBUTEUR D ALLUMAGE - BOBINE CABLAGES ET BOUGIES	DISTRIBUTOR PARTS-COIL - CABLES AND SPARK PLUGS -	EINZELTEILE DES ZUNDVERTEILERS ZUNDSPULE-U.LEITUNGEN	PIEZAS DEL DISTRIBUIDOR-BOBINA CABLES Y BUJIAS	41.10/0	283
GRUPPO PROTEZIONI DISTRIBUTORE E BOBINA	COLLECTION DE PROTECTEURS DE DISTRIBUTEUR ET DE BOBINE	DISTRIBUTOR & COIL PROTECTION UNIT	SCHUTZVERKLEIDUNGSSATZ ZUNDVERTEILER UND ZUNDSPULE	JUEGO DE PROTECCIONES DISTRIBUIDOR Y BOBINA	41.11/0	285
DISTRIBUTORE - BOSCH	DISTRIBUTEUR D ALLUMAGE	DISTRIBUTOR	ZUNDVERTEILER	DISTRIBUIDOR	41.21/0	287
DISTRIBUTORE - MARELLI	DISTRIBUTEUR D ALLUMAGE	DISTRIBUTOR	ZUNDVERTEILER	DISTRIBUIDOR	41.23/0	289
MOTORINO D AVVIAMENTO - BOSCH	DEMARREUR	STARTING MOTOR	ANLASSER	MOTOR DE ARRANQUE	42.01/0	291
PARTICOLARI DEL MOTORINO AVVIAMENTO -BOSCH-	DETAIL DU DEMARREUR	STARTING MOTOR COMPONENTS	EINZELTEILE DES ANLASSERS	PIEZAS DEL MOTOR DE ARRANQUE	42.02/0	293
PARTICOLARI DEL MOTORINO AVVIAMENTO -BOSCH-	DETAIL DU DEMARREUR	STARTING MOTOR COMPONENTS	EINZELTEILE DES ANLASSERS	PIEZAS DEL MOTOR DE ARRANQUE	42.02/1	295
MOTORINO AVVIAMENTO -PARIS RHONE-	DEMARREUR	STARTING MOTOR	ANLASSER	MOTOR DE ARRANQUE	42.05/0	297
ALTERNATORE - BOSCH	ALTERNATEUR	ALTERNATOR	ALTERNATOR	ALTERNADOR	43.01/0	299

DENOMINAZIONE	DESIGNATION	DESCRIPTION	BENENNUNG	DENOMINACIONES	TAV	PAG
PARTICOLARI DELL ALTERNATORE - BOSCH	DETAIL DE ALTERNATEUR	ALTERNATOR COMPONENTS	EINZELTEILE DES ALTERNATORS	PIEZAS DEL ALTERNADOR	43.02/0	301
PARTICOLARI DELL ALTERNATORE - BOSCH	DETAIL DE ALTERNATEUR	ALTERNATOR COMPONENTS	EINZELTEILE DES ALTERNATORS	PIEZAS DEL ALTERNADOR	43.02/1	303
PARTICOLARI DELL ALTERNATORE - BOSCH	DETAIL DE ALTERNATEUR	ALTERNATOR COMPONENTS	EINZELTEILE DES ALTERNATORS	PIEZAS DEL ALTERNADOR	43.02/2	305
ALTERNATORE -MARCHAL-	ALTERNATEUR	ALTERNATOR	ALTERNATOR	ALTERNADOR	43.07/0	307
ALTERNATORE -MARCHAL-	ALTERNATEUR	ALTERNATOR	ALTERNATOR	ALTERNADOR	43.07/1	311
ALTERNATORE -MARCHAL-	ALTERNATEUR	ALTERNATOR	ALTERNATOR	ALTERNADOR	43.07/2	313
ALTERNATORE -PARIS RHONE-	ALTERNATEUR	ALTERNATOR	ALTERNATOR	ALTERNADOR	43.08/0	315
PROIETTORE	PROJECTEUR	HEADLAMP	SCHEINWERFER	PROYECTOR	44.09/0	317
FANALINO ANTERIORE	LANTERNE AVANT	FRONT PARKING LIGHT	VORDERE BLINK - STANDLEUCHTE	LAMPARA ANTERIOR	44.53/0	319
FANALINO POSTERIORE	LANTERNE ARRIERE	TAIL LIGHT	RECKLEUCHTE	LAMPARA POSTERIOR	44.63/0	321
FANALINO LATERALE	CLIGNOTANT LATERAL	SIDE DIRECTIONAL LIGHT	SEITLICHE BLINKLEUCHTE	LAMPARA LATERAL	44.72/0	323

DENOMINAZIONE	DESIGNATION	DESCRIPTION	BENENNUNG	DENOMINACIONES	TAV	PAG
FANALINO ILLUMINAZIONE TARGA	ECLAIREUR DE PLAQUE DE POLICE	LICENSE PLATE LIGHT	KENNZEICHENLEUCHTE	LAMPARA MATRICULA	44.82/0	325
TERGICRISTALLO - BOSCH	ESSUIE-GLACE	WINDSHIELD WIPER	SCHEIBENWISCHER	LIMPIA PARABRISAS	45.01/0	327
PARTICOLARI DEL TERGICRISTALLO - BOSCH	DETAIL DE L ESSUIE-GLACE	WINDSHIELD WIPER COMPONENTS	EINZELTEILE DES SCHEIBENWISCHERS	PIEZAS DEL LIMPIA PARABRISAS	45.02/0	329
TERGICRISTALLO - MARELLI	ESSUIE-GLACE	WINDSHIELD WIPER	SCHEIBENWISCHER	LIMPIA PARABRISAS	45.07/0	331
PARTICOLARI DEL TERGICRISTALLO - MARELLI	DETAIL DE L ESSUIE-GLACE	WINDSHIELD WIPER COMPONENTS	EINZELTEILE DES SCHEIBENWISCHERS	PIEZAS DEL LIMPIA PARABRISAS	45.08/0	333
ACCESSORI VARI DELL IMPIANTO ELETTRICO	ACCESSOIRES DE L EQUIPEMENT ELECTRIQUE	MISCELLANEOUS ELECTRICAL EQUIPMENT	EINZELTEILE DER ELEKTR. AUSRUSTUNG	ACCESSORIOS DE LA INSTALACION ELECTRICA	46.00/0	335
CAVI PER IMPIANTO ELETTRICO	CABLES ELECTRIQUES	ELECTRICAL CABLES	ELEKTRISCHE LEITUNGEN	CABLES ELECTRICOS	46.10/0	339
FISSAGGI VARI PER IMPIANTO ELETTRICO	FIXATION DE SYSTEME ELECTRIQUE	ELECTRICAL SYSTEM FASTENERS	BEFESTIGUNGSTEILE DER ELEKTRISCHEN ANGLAGE	FIJACION CABLES ELECTRICOS	46.20/0	341
CAVI PER IMPIANTO ELETTRICO - FORNITI A METRI -	CABLES ELECTRIQUES - LIVRE PAR METRES -	ELECTRICAL CABLES SUPPLIED BY LENGTH	ELEKTRISCHE LEITUNGEN - VON LAUFENDEN METER ERHALTLICH -	CABLES ELECTRICOS QUE SE SUMINISTRAN POR METROS	46.30/0	343
TUBI IN ROTOLI - Forniti a cm.	TUBE EN ROULEAU - Vente au cm.	REELED HOSES - Supplied by cm.	ROHR AUFGEROLLT - Lieferung cm.	TUBOS EN ENROLLADOS - Vendidos por cm.	49.00/0	344

Distribuzione Alfa GT

PARTICOLARI DEL DISTRIBUTORE - BOBINA - CAVI E CANDELE
DETAIL DU DISTRIBUTEUR D'ALLUMAGE - BOBINE - CABLAGES ET BOUGIES
DISTRIBUTORS PARTS - COIL - CABLES AND SPARK PLUGS
EINZELTEILE VON ZÜNDVERTEILER ZÜNDSPULE - U. LEITUNGEN
PIEZAS DEL DISTRIBUIDOR - BOBINA CABLES Y BUJIAS

TAV. 41.10

1ª EDIZIONE APRILE 1974
1st EDITION APRIL 1974
1ère EDITION AVRIL 1974
AUSGABE APRIL 1974
1ª EDICION ABRIL 1974

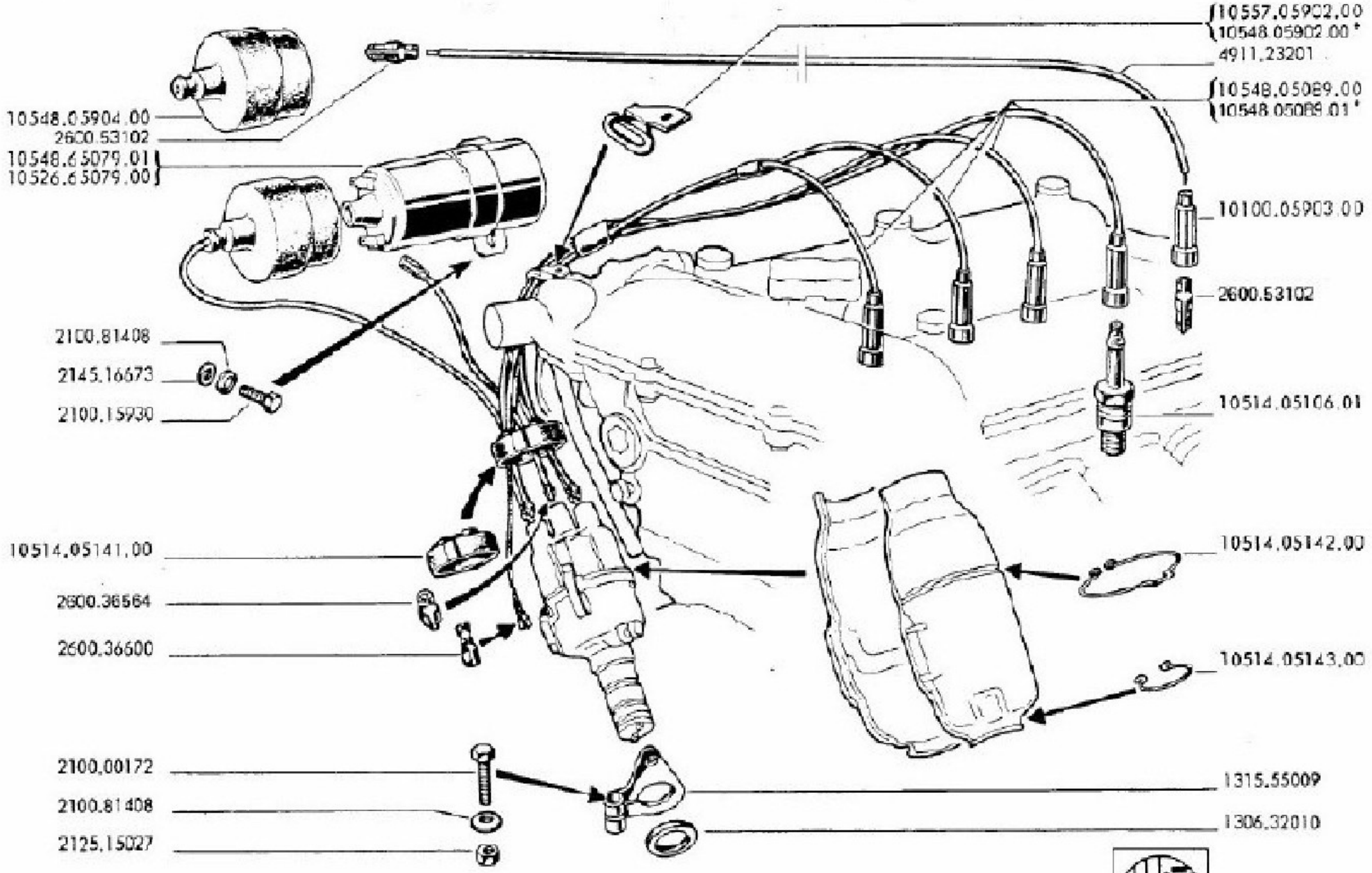

N. 6914

Alfetta GT

TAV. 41.10/0 PARTICOLARI DEL DISTRIBUTORE - BOBINA -CAVI E CANDELE
DETAIL DU DISTRIBUTEUR D ALLUMAGE-BOBINE-CABLAGES ET BOUGIES
DISTRIBUTOR PARTS-COIL-CABLES AND SPARK PLUGS
EINZELTEILE DES ZUNDVERTEILERS ZUNDSPULE-U.LEITUNGEN
PIEZAS DEL DISTRIBUIDOR-BOBINA CABLES Y BUJIAS

MODIFICA	N. ORDINAZIONE	QT.	DENOMINAZIONE	DESIGNATION	DESCRIPTION	BENENNUNG	DENOMINACION
	1306.32010	1	ANELLO TENUTA	BAGUE	RING	RING	ANILLO
	1315.55009	1	PIASTRA	PLAQUE	PLATE	PLATTE	PLACA
	2100.00172	1	VITE	VIS	SCREW	SCHRAUBE	TORNILLO
	2100.15930	2	VITE	VIS	SCREW	SCHRAUBE	TORNILLO
	2100.81408	3	RONDELLA	RONDELLE	WASHER	SCHEIBE	ARANDELLA
	2125.15027	1	DADO	ECROU	NUT	MUTTER	TUERCA
	2145.15673	2	RONDELLA	RONDELLE	WASHER	SCHEIBE	ARANDELLA
	2600.36564	1	TERMINALI CAVI AT	FICHE	TERMINAL	ENDSTUECK	TERMINAL
	2600.36600	2	TERMINALE CAVI BT	FICHE	TERMINAL	ENDSTUECK	TERMINAL
	2600.59102	9	TERMINALE CAVI	FICHE	TERMINAL	ENDSTUECK	TERMINAL
	4911.23201	0	CAVO AT	CABLE SECONDAIRE	SECONDARY CABLE	KABEL SEKUNDAERSTRON	CABLE SECUNDARIO
	10100.05903.00	4	CAPPUCCIO	CAPUCHON	BOOT	KAPPE	CAPUCHON
	10514.05106.01	4	CANDELA LODGE 2HL	BOUGIE	SPARK PLUG	ZUENDKERZE	BUJIA
	10514.05141.00	1	CAPPUCCIO DISTRIB.	CAPUCHON	BOOT	KAPPE	CAPUCHON
	10514.05142.00	1	ANELLO ELASTICO SUP.	SEGMENT SUPERIEUR	COMPRESSION RING	KOMPRESSIONSRING	ANILLO SUPERIOR
	10514.05143.00	1	ANELLO ELASTICO INF.	SEGMENT INTERMEDIAIR	OIL SCRAPER RING	VERDICHTUNGSRING	ANILLO INTERMEDIO
	10526.65079.00	1	BOBINA BOSCH	BOBINE	COIL	ZUENDSPULE	BOBINA
	10548.05089.00	1	GRUPPO CAVI	COLLECTION DE CABLES	CABLE SET	GRUPPE KABEL	GRUPO CABLES
	10548.05089.01	* 1	GRUPPO CAVI	COLLECTION DE CABLES	CABLE SET	GRUPPE KABEL	GRUPO CABLES
	10548.05902.00	* 1	SQUADRETTA	GOUSSET	BRACKET	WINKELSTUECK	ESCUADRITA
	10548.05904.00	1	CAPPUCCIO BOBINA	CAPUCHON	BOOT	KAPPE	CAPUCHON
	10548.65079.01	1	BOBINA MARELLI	BOBINE	COIL	ZUENDSPULE	BOBINA
	10557.05902.00	1	SQUADRETTA	GOUSSET	BRACKET	WINKELSTUECK	ESCUADRITA

* PER ESPORTAZIONE POUR EXPORTATION FOR EXPORT FUR EXPORT PARA EXPORTACION

GRUPPO PROTEZIONI DISTRIBUTORE E BOBINA
COLLECTION DE PROTECTEURS DE DISTRIBUTEUR ET DE BOBINE
DISTRIBUTOR & COIL PROTECTION UNIT
SCHUTZVERKLEIDUNGSSATZ ZÜNDVERTEILER UND ZÜNDSPULE
JUEGO DE PROTECCIONES DISTRIBUIDOR Y BOBINA

TAV. 41.11

1 EDIZIONE APRILE 1974
ème EDITION AVRIL
st EDITION APRIL
. AUSGABE APRIL
ma EDICIÓN ABRIL

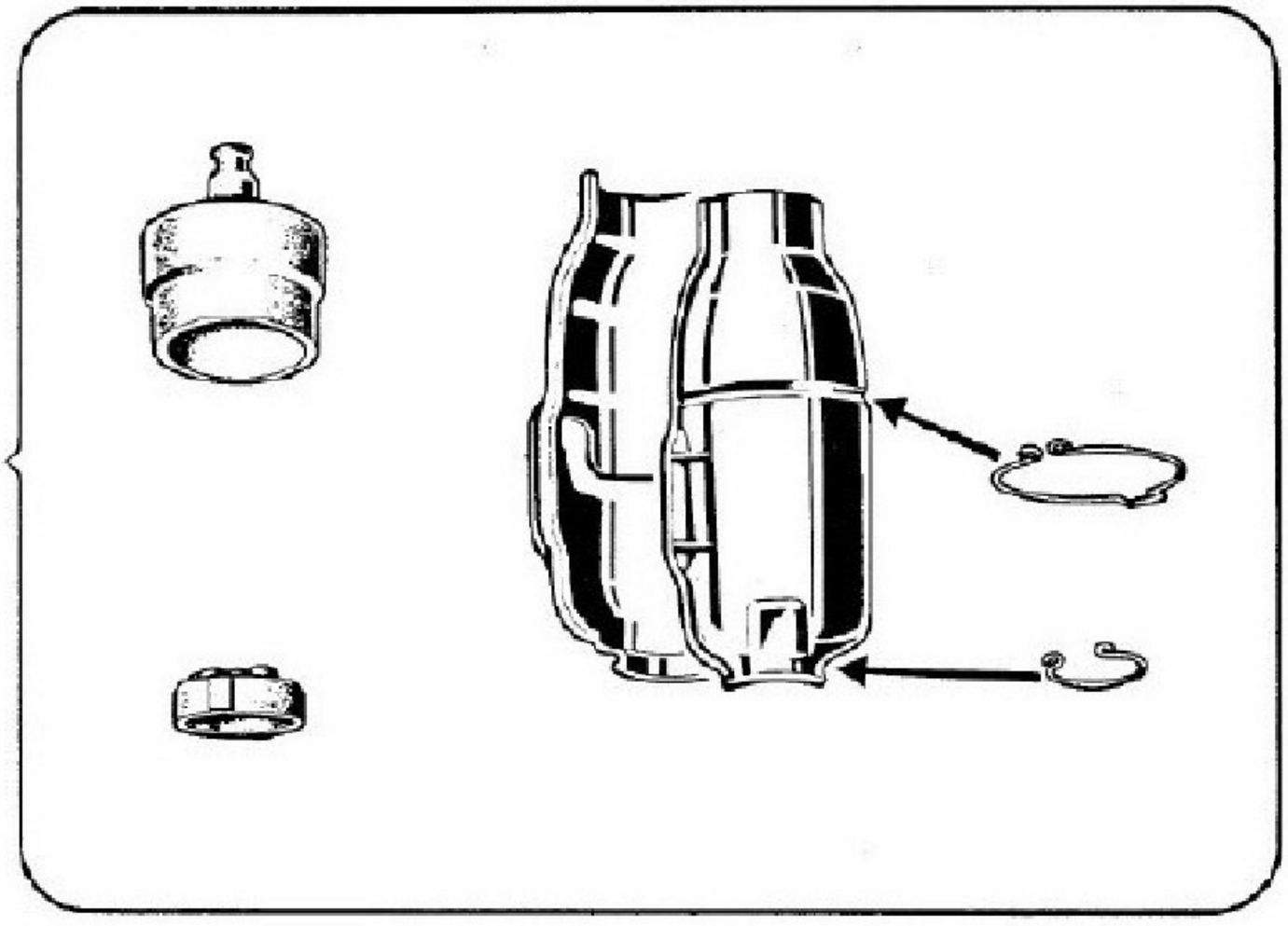

10526.05920.00
11500.05920.00

TAV. 41-11/0

GRUPPO PROTEZIONE DISTRIBUTORE E BOBINA
COLLECTION DE PROTECTEURS DE DISTRIBUTEUR ET DE BOBINE
DISTRIBUTOR & COIL PROTECTION UNIT
SCHUTZVERKLEIDUNGSSATZ ZUNDVERTEILER UND ZUNDSPULE
JUEGO DE PROTECCIONES DISTRIBUIDOR Y BOBINA

MODIFICA	N. ORDINAZIONE	QT.	DENOMINAZIONE	DESIGNATION	DESCRIPTION	BENENNUNG	DENOMINACIONES
	10526.05920.00	1	GR.PROTEZIONE BOSCH	PROTECTEUR	PROTECTION	SCHUTZ	PROTECCION
	11500.05920.00	1	GR.PROTEZIONE MARELL	PROTECTEUR	PROTECTION	SCHUTZ	PROTECCION

DISTRIBUTORE
DISTRIBUTEUR D'ALLUMAGE
DISTRIBUTOR
ZÜNDVERTEILER
DISTRIBUIDOR

BOSCH

TAV. 41.21

1ª	EDIZIONE	1974	APRILE
1ère	EDITION		AVRIL
1st	EDITION		APRIL
1ª	EDICAO		APRIL
1ra	EDICION		ABRIL

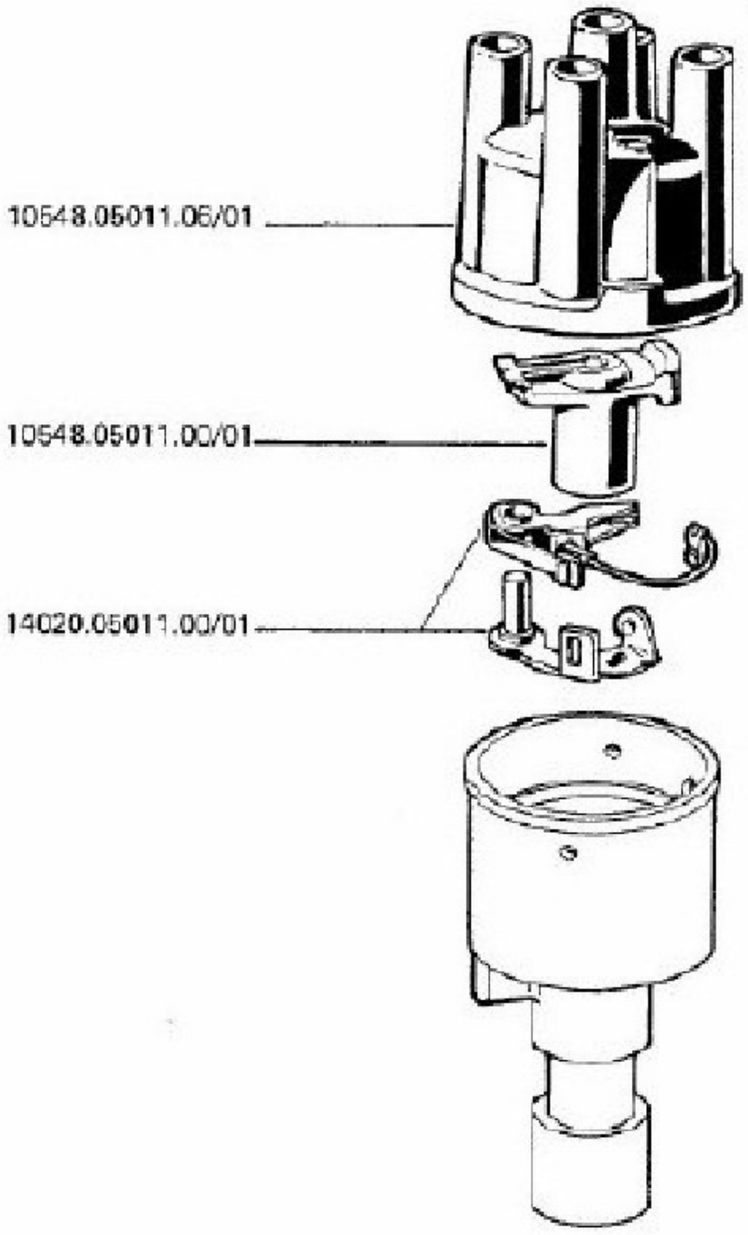

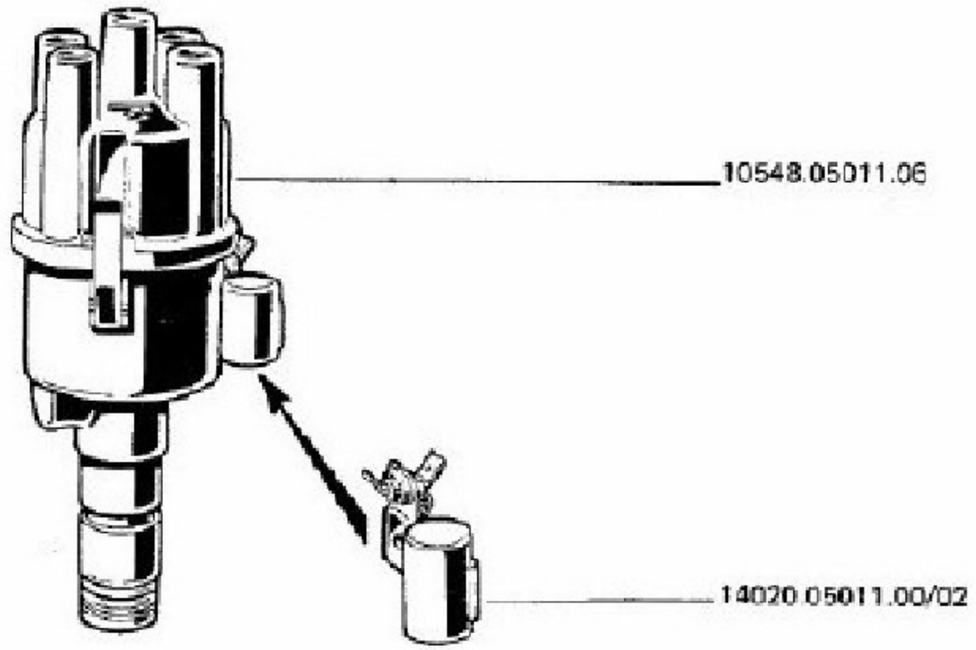

TAV. 41.21/0

DISTRIBUTORE - BOSCH
DISTRIBUTEUR D ALLUMAGE
DISTRIBUTOR
ZUNDVERTEILER
DISTRIBUIDOR

MODIFICA	N. ORDINAZIONE	QT.	DENOMINAZIONE	DÉSIGNATION	DESCRIPTION	BENENNUNG	DENOMINACIONES
	10548.0501L.00/01	1	SPAZZOLA	ROTOR DISTRIBUTEUR	DISTRIBUTOR ROTOR	VERTEILEREINGER	ROTOR DEL DISTRIBUID
	10548.0501L.06	1	DISTRIBUTORE COMPL.	DISTRIBUTEUR ALLUMAG	IGNITION DISTRIBUTOR	VERTEILER	DISTRIBUIDOR ENCEND.
	10548.0501L.06/01	1	CALOTTA	CHAPEAU DISTRIBUTEUR	CAP	VERTEILERKAPPE	CUPULA
	14020.0501L.00/01	1	SERIE CONTATTI	COLLECTION CONTACTS	SET OF CONTACTS	KONTAKTSATZ	SERIE CONTACTOS
	14020.0501L.00/02	1	CONDENSATORE	CONDENSATEUR	CONDENSER	KONDENSATOR	CONDENSADOR

DISTRIBUTORE
DISTRIBUTEUR D'ALLUMAGE
DISTRIBUTOR
ZÜNDVERTEILER
DISTRIBUIDOR

MARELLI

TAV. 41.23

1ª EDIZIONE APRILE
1ère EDITION AVRIL
1st EDITION APRIL
1. AUFLAGE APRIL
1ª EDICION ABRIL 1974

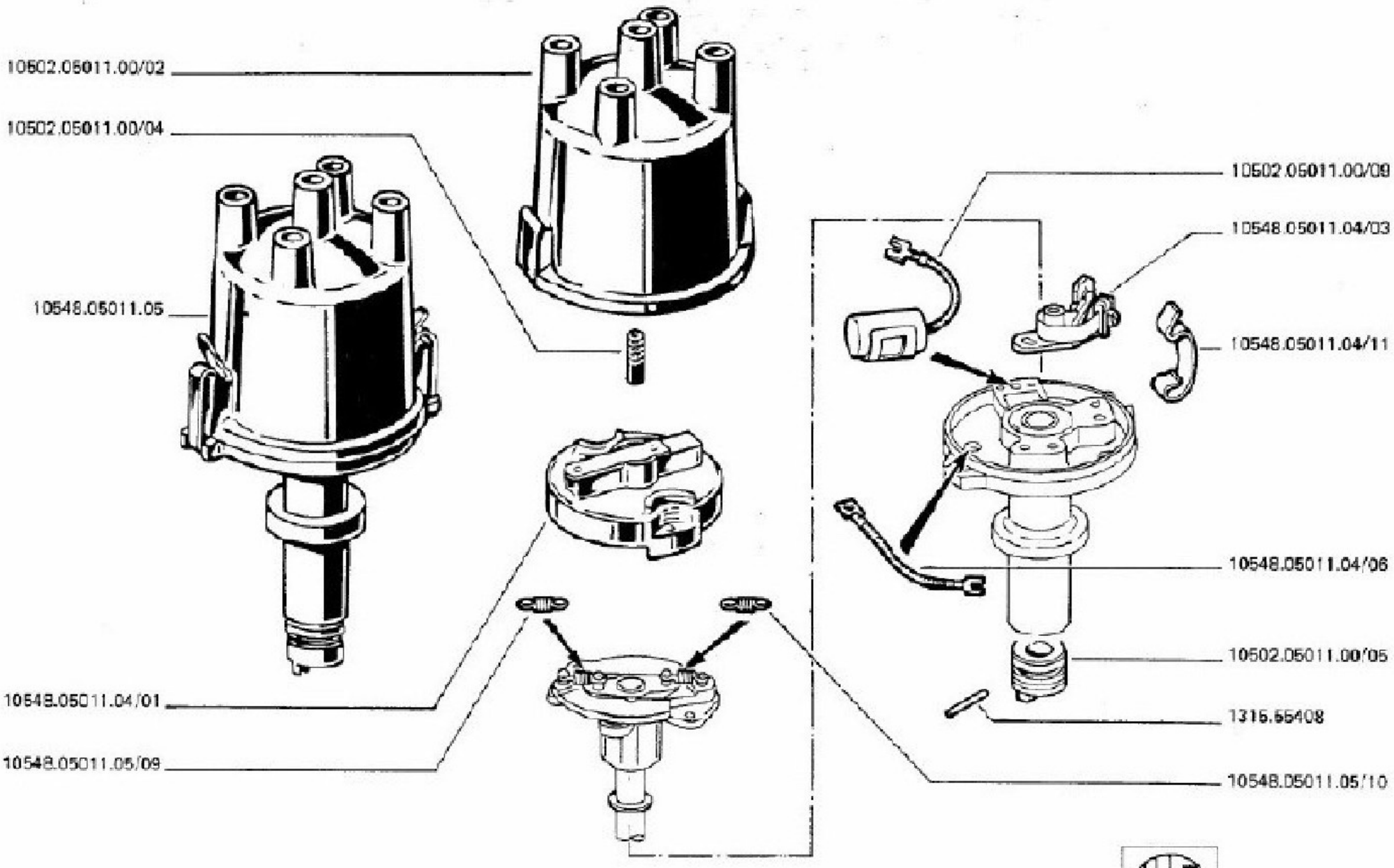

N. 0937

Alfetta GT

TAV. 41.23/0 DISTRIBUTORE - MARELLI
DISTRIBUTEUR D ALLUMAGE
DISTRIBUTOR
ZUNDVERTEILER
DISTRIBUIDOR

MODIFICA	N. ORDINAZIONE	QT.	DENOMINAZIONE	DESIGNATION	DESCRIPTION	BENENNUNG	DENOMINACIONES
	1315.55408	1	SPINA	GOUPILLE CONIQUE	TAPER PIN	KEGELSTIFT	PASADOR CONICO
	10502.05011.00/02	1	CALOTTA	CHAPEAU DISTRIBUTEUR	CAP	VERTEILERKAPPE	CUPULA
	10502.05011.00/04	1	CARBONCINO	CHARBON DE CONTACT	CARBON BRUSH	KOHLENBUERSTE	CARBONCITO
	10502.05011.00/05	1	GIUNTO	RACCORD D ACCOUPL.	COUPLING CONNECTOR	KUPPLUNGSSTIFT	PIEZA DE CONEXION
	10502.05011.00/09	1	CONDENSATORE	CONDENSATEUR	CONDENSER	KONDENSATOR	CONDENSADOR
	10548.05011.04/01	1	SPAZZOLA	ROTOR DISTRIBUTEUR	DISTRIBUTOR ROTOR	VERTEILERFINGER	ROTOR DEL DISTRIBUID
	10548.05011.04/03	1	SERIE CONTATTI	COLLECTION CONTACTS	SET OF CONTACTS	KONTAKTSATZ	SERIE CONTACTOS
	10548.05011.04/06	1	CONNESSIONE	CONNEXION	CONNECTION	ANSCHLUSS	CONEXION
	10548.05011.04/11	2	MOLLA REGGICALOTTA	RESSORT A LAME	LAMINATED SPRING	BLATTFEDER	BALLESTA
	10548.05011.05	1	DISTRIBUTORE	DISTRIBUTEUR ALLUMAG	IGNITION DISTRIBUTOR	VERTEILER	DISTRIBUIDOR ENCEND.
	10548.05011.05/09	1	MOLLA	RESSORT DE TENSION	TENSION SPRING	ZUGFEDER	RESORTE DE TRACCION
	10548.05011.05/10	1	MOLLA	RESSORT DE TENSION	TENSION SPRING	ZUGFEDER	RESORTE DE TRACCION

MOTORINO D'AVVIAMENTO
DEMARREUR
STARTING MOTOR
ANLASSER
MOTOR DE ARRANQUE

BOSCH

TAV. 42.01

1ª	EDIZIONE	APRILE	1974
1st	EDITION	APRIL	
1e	EDITION	APRIL	
1	AUSGABE	APRIL	
1ª	EDICION	ABRIL	

DATA ULTIMO AGGIORNAMENTO

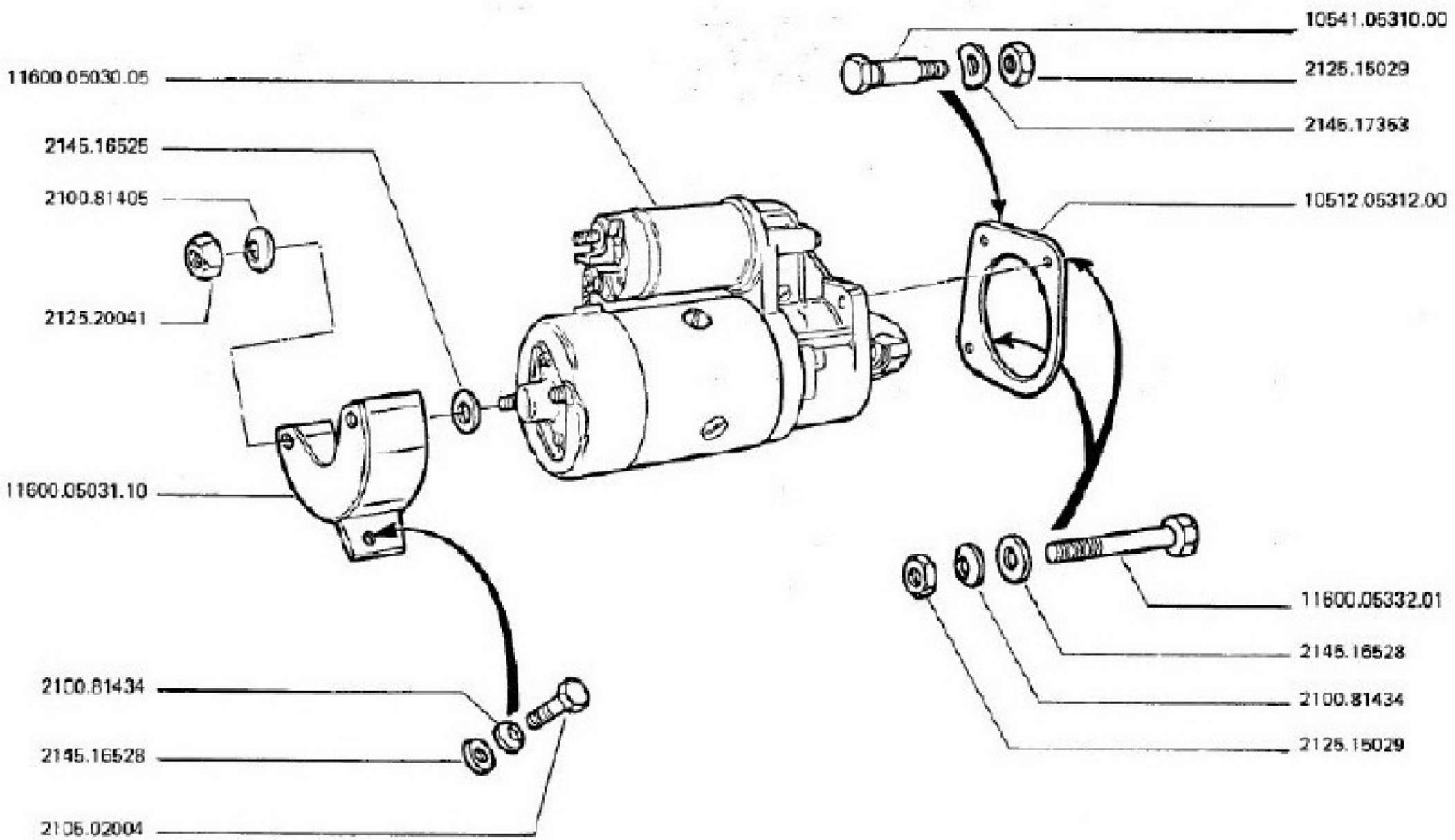

TAV. 42.01/0

MOTORINO D AVVIAMENTO - BOSCH
DEMARREUR
STARTING MOTOR
ANLASSER
MOTOR DE ARRANQUE

MODIFICA	N. ORDINAZIONE	QT.	DENOMINAZIONE	DÉSIGNATION	DESCRIPTION	BENENNUNG	DESIGNACIONES
	2100.81405	2	RONDELLA	RONDELLE	WASHER	SCHEIBE	ARANDELLA
	2100.81434	3	RONDELLA	RONDELLE	WASHER	SCHEIBE	ARANDELLA
	2105.02004	1	VITE	VIS	SCREW	SCHRAUBE	TORNILLO
	2125.15029	3	DADO	ECROU	NUT	MUTTER	TUERCA
	2125.20041	2	DADO	ECROU	NUT	MUTTER	TUERCA
	2145.16525	2	RONDELLA	RONDELLE	WASHER	SCHEIBE	ARANDELLA
	2145.16528	3	RONDELLA	RONDELLE	WASHER	SCHEIBE	ARANDELLA
	2145.17353	1	RONDELLA	RONDELLE	WASHER	SCHEIBE	ARANDELLA
	10512.05312.00	1	SPESSORE	CALE	SPACER	BEILAGE	ESPESOR
	10541.05310.00	1	VITE	VIS	SCREW	SCHRAUBE	TORNILLO
	11600.05030.05	1	MOTORINO COMPLETO	MOTEUR	MOTOR	GEBLAESEMOTOR	MOTOR VENTILADOR
	11600.05031.10	1	SOSTEGNO MOTORINO	SUPPORT	SUPPORT	STUETZE	SOSTEN
	11600.05332.01	2	VITE	VIS	SCREW	SCHRAUBE	TORNILLO

PARTICOLARI DEL MOTORINO D'AVVIAMENTO
DETAIL DU DEMARREUR
STARTING MOTOR COMPONENTS
EINZELTEILE DES ANLASSERS
PIEZAS DEL MOTOR DE ARRANQUE

BOSCH

TAV. 42.02

1	EDICIONE	1974	APRILE	DATA AGGIORNAMENTO
	EDITION		AVRIL	
	EDITION		APRIL	
	AUSGABE		APRIL	
	EDICION		ABRIL	

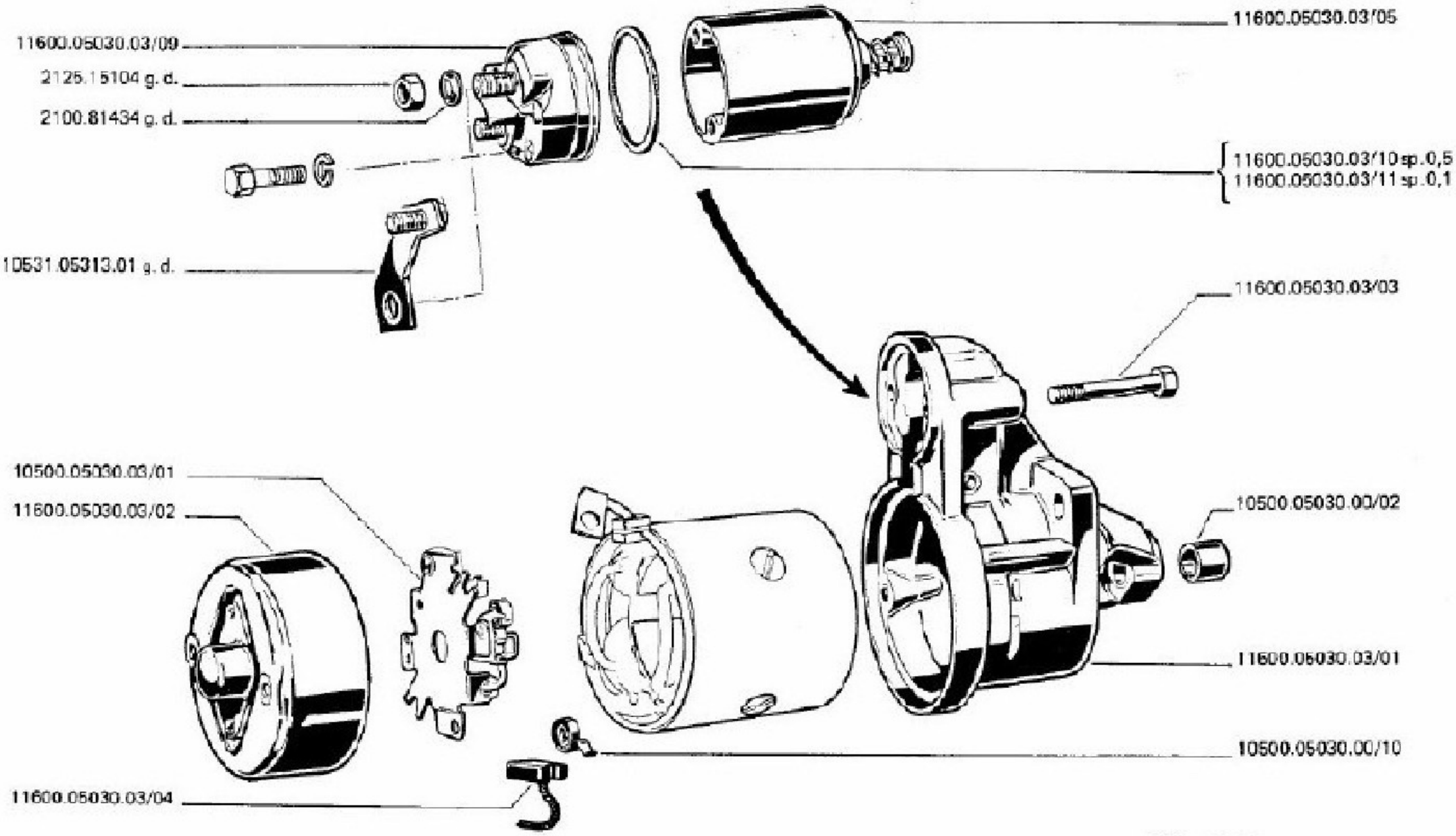

TAV. 42.02/0

PARTICOLARI DEL MOTORINO D AVVIAMENTO - BOSCH
DETAIL DU DEMARREUR
STARTING MOTOR COMPONENTS
EINZELTEILE DES ANLASSERS
PIEZAS DEL MOTOR DE ARRANQUE

MODIFICA	N. ORDINAZIONE	QT.	DENOMINAZIONE	DÉSIGNATION	DESCRIPTION	BENENNUNG	DENOMINACIONES
	2100.81434 *	1	RONDELLA	RONDELLE	WASHER	SCHEIBE	ARANDELLA
	2125.15104 *	1	DADO	ECROU	NUT	MUTTER	TUERCA
	10500.05030.00/02	1	BOCCOLA	BAGUE	BEARING	LAGERBUESCHSE	CASQUILLO
	10500.05030.00/10	4	MOLLA	RESSORT	SPRING	FEDER	MUELLE
	10500.05030.03/01	1	PORTASPAZZOLE	PORTE-BALAI	BRUSH HOLDER	BUERSTENTRAEGER	PORTACEPILLOS
	10531.05313.01 *	1	PIASTRINA	PLAQUETTE	PLATE	PLAETTCHEN	PLAQUITA
	11600.05030.03/01	1	SUPPORTO	SUPPORT	SUPPORT	LAGERUNG	SOPORTE
	11600.05030.03/02	1	SUPPORTO	SUPPORT	SUPPORT	LAGERUNG	SOPORTE
	11600.05030.03/03	2	VITE	VIS	SCREW	SCHRAUBE	TORNILLO
	11600.05030.03/04	2	SERIE SPAZZOLE	COLLECTION BALAIS	SET OF BRUSHES	BUERSTENSATZ	SERIE CEPILLOS
	11600.05030.03/05	1	INTERRUTTORE	INTERRUPTEUR	SWITCH	SCHALTER	INTERRUPTOR
	11600.05030.03/09	1	COPERCHIO	COUVERCLE	COVER	DECKEL	TAPA
	11600.05030.03/10	0	GUARNIZIONE SP. 0,5	JOINT	GASKET	DICHTUNG	JUNTA
	11600.05030.03/11	0	GUARNIZIONE SP. 0,1	JOINT	GASKET	DICHTUNG	JUNTA

* PER G.D.

PARTICOLARI DEL MOTORINO D'AVVIAMENTO
DETAIL DU DEMARREUR
STARTING MOTOR COMPONENTS
EINZELTEILE DES ANLASSERS
PIEZAS DEL MOTOR DE ARRANQUE

BOSCH

TAV. 42.02/1

1ª	EDIZIONE	1974	APRILE
1st	EDITION		AVRIL
1st	EDITION		APRIL
1ª	AUSGABE		APRIL
1ª	EDICION		ABRIL

DATA ULTIMO AGGIORNAMENTO

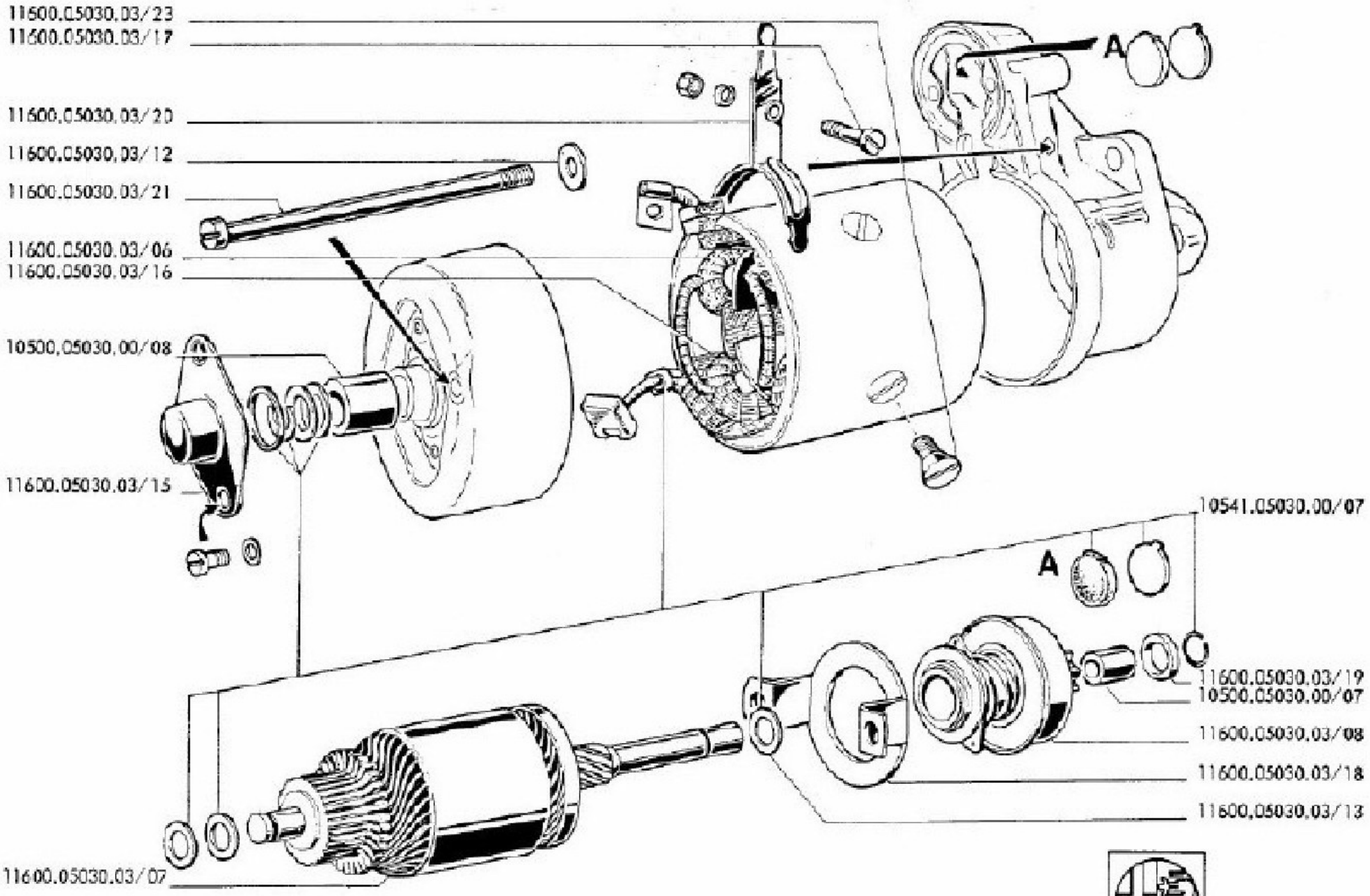

TAV. 42.02/L PARTICOLARI DEL MOTORINO D AVVIAMENTO - BOSCH
DETAIL DU DEMARREUR
STARTING MOTOR COMPONENTS
EINZELTEILE DES ANLASSERS
PIEZAS DEL MOTOR DE ARRANQUE

MODIFICA	N. ORDINAZIONE	QT.	DENOMINAZIONE	DESIGNATION	DESCRIPTION	BENENNUNG	DENOMINACIONES
	10500.05030.00/07	1	BOCCOLA	BAGUE	BEARING	LAGERBUESCHSE	CASQUILLO
	10500.05030.00/08	1	BOCCOLA	BAGUE	BEARING	LAGERBUESCHSE	CASQUILLO
	10541.05030.00/07	1	GRUPPO RICAMBI	COLLECTION-REPARATIO	REPAIR KIT	GRUPPE ERSATZTEILE	GRUPO REPUESTOS
	11600.05030.03/06	1	AVVOLGIMENTO	ENROULEMENT	WINDING	WICKLUNG	BOBINADO
	11600.05030.03/07	1	INDOTTO	INDUIT	ARMATURE	ANKER	INDUCIDO
	11600.05030.03/08	1	PIGNONE	PIGNON	PINION	KEGELRAD	PINON
	11600.05030.03/12	2	RONDELLA	RONDELLE	WASHER	SCHEIBE	ARANDELLA
	11600.05030.03/13	1	RONDELLA	RONDELLE	WASHER	SCHEIBE	ARANDELLA
	11600.05030.03/15	1	COPERCHIETTO	COUVERCLE	COVER	DECKEL	TAPA
	11600.05030.03/16	1	ISOLANTE	ISOLANT	INSULATOR	ISOLIERSTOFF	AISLANTE
	11600.05030.03/17	1	VITE	VIS	SCREW	SCHRAUBE	TORNILLO
	11600.05030.03/18	1	ARRESTO	ARRETOIR	RETAINER	VERSCHLUSS	RETEN
	11600.05030.03/19	1	ANELLO ARRESTO	ARRETOIR	LOCKRING	ANSCHLAG	TOPE
	11600.05030.03/20	1	FORCELLA	FOURCHETTE	FORK	GABEL	HORQUILLA
	11600.05030.03/21	2	VITE	VIS	SCREW	SCHRAUBE	TORNILLO
	11600.05030.03/23	4	VITE	VIS	SCREW	SCHRAUBE	TORNILLO

MOTORINO D'AVVIAMENTO
DEMARREUR
STARTING MOTOR
ANLASSER
MOTOR DE ARRANQUE

PARIS-RHONE

TAV. 42.05

1ª	EDIZIONE	APRILE	1974
1ère	EDITION	AVRIL	
1st	EDITION	APRIL	
1.	AUSGABE	APRIL	
1ª	EDICION	ABRIL	

DATA DELLE MODIFICAZIONI

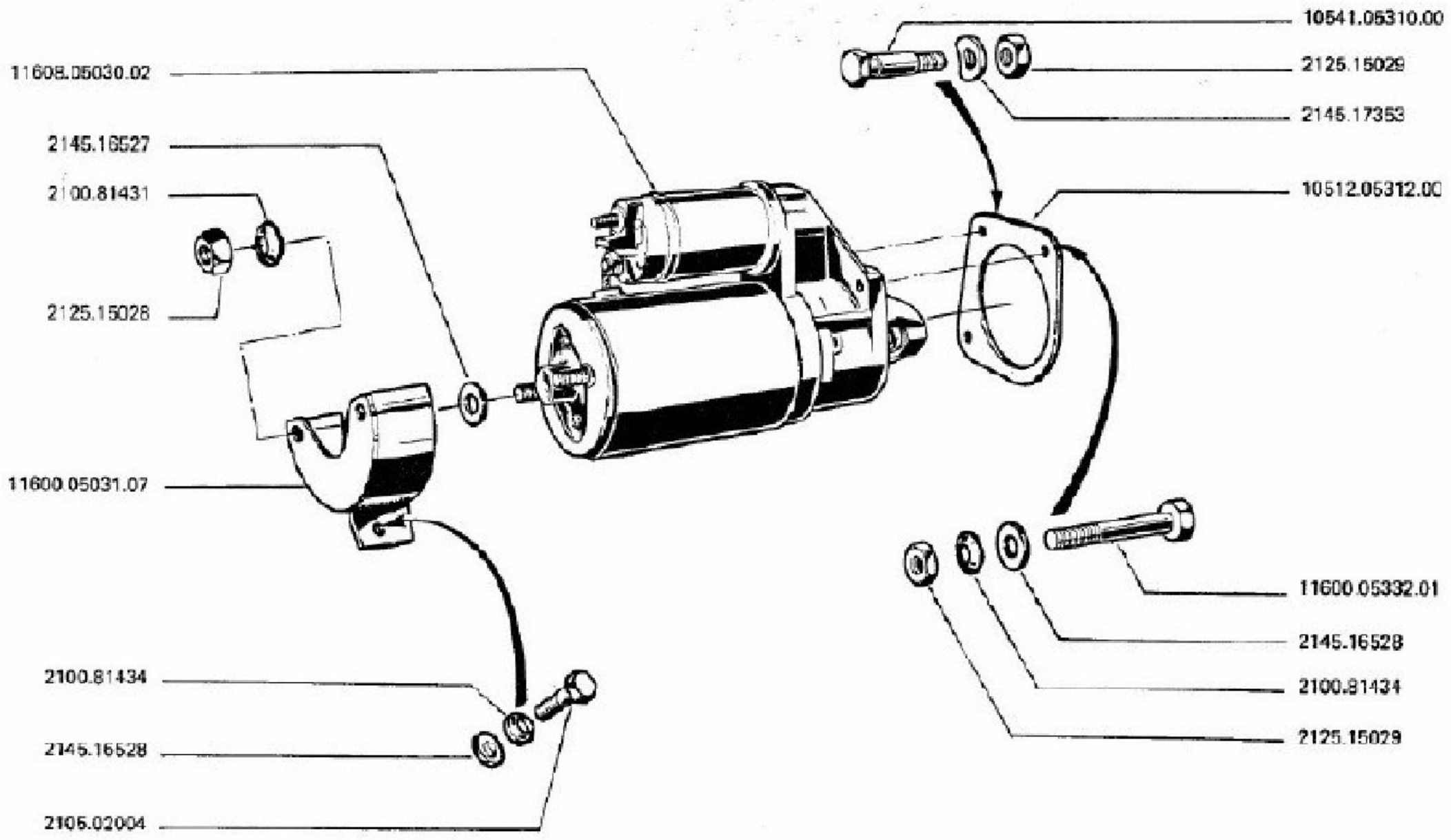

TAV. 42.05/0 MOTORINO AVVIAMENTO -PARIS RHONE-
DEMARREUR
STARTING MOTOR
ANLASSER
MOTOR DE ARRANQUE

MODIFICA	N. ORDINAZIONE	QT.	DESIGNAZIONE	DÉSIGNATION	DESCRIPTION	BENENNUNG	DENOMINACIONES
	2100.81431	2	RONDELLA	RONDELLE	WASHER	SCHEIBE	ARANDELLA
	2100.81434	3	RONDELLA	RONDELLE	WASHER	SCHEIBE	ARANDELLA
	2105.02004	1	VITE	VIS	SCREW	SCHRAUBE	TORNILLO
	2125.15028	2	DADO	ECROU	NUT	MUTTER	TUERCA
	2125.15029	3	DADO	ECROU	NUT	MUTTER	TUERCA
	2145.16527	2	RONDELLA	RONDELLE	WASHER	SCHEIBE	ARANDELLA
	2145.16528	3	RONDELLA	RONDELLE	WASHER	SCHEIBE	ARANDELLA
	2145.17353	1	RONDELLA	RONDELLE	WASHER	SCHEIBE	ARANDELLA
	10512.05312.00	1	SPESSORE	CALE	SPACER	BEILAGE	ESPESOR
	10541.05310.00	1	VITE	VIS	SCREW	SCHRAUBE	TORNILLO
	11600.05031.07	1	SOSTEGNO MOTORINO	SUPPORT	SUPPORT	STUETZE	SOSTEN
	11600.05332.01	2	VITE	VIS	SCREW	SCHRAUBE	TORNILLO
	11608.05030.02	1	MOTORINO COMPLETO	MOTEUR	MOTOR	GEBLAESEMOTOR	MOTOR VENTILADOR

ALTERNATORE
ALTERNATEUR
ALTERNATOR
ALTERNATOR
ALTERNADOR

BOSCH

TAV. 43.01

1ª EDIZIONE 1974 APRILE
1re EDITION AVRIL
1st EDITION APRIL
1. ALSGABE APRIL
1ª EDICION ABRIL

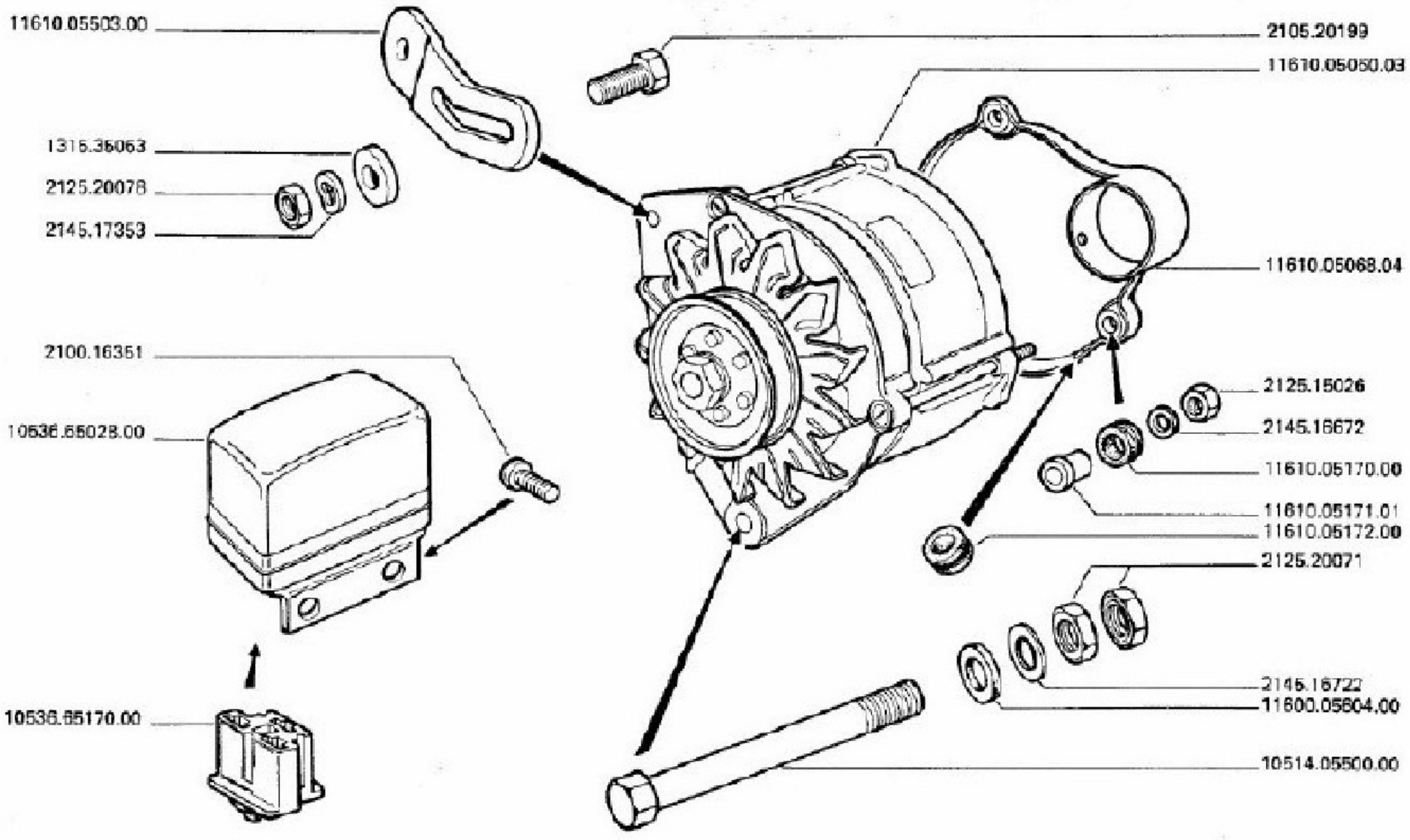

N. 7018

Alfetta GT

TAV. 43.01/0

ALTERNATORE - BOSCH
ALTERNATEUR
ALTERNATOR
ALTERNATOR
ALTERNADOR

MODIFICA	N. ORDINAZIONE	QT.	DENOMINAZIONE	DESIGNATION	DESCRIPTION	BENENNUNG	DENOMINACIONES
	1315.35063	1	RONDELLA	RONDELLE	WASHER	SCHEIBE	ARANDELLA
	2100.16351	2	VITE	VIS	SCREW	SCHRAUBE	TORNILLO
	2105.20199	1	VITE	VIS	SCREW	SCHRAUBE	TORNILLO
	2125.15026	3	DADO	ECROU	NUT	MUTTER	TUERCA
	2125.20071	2	DADO	ECROU	NUT	MUTTER	TUERCA
	2125.20078	1	DADO	ECROU	NUT	MUTTER	TUERCA
	2145.16672	3	RONDELLA	RONDELLE	WASHER	SCHEIBE	ARANDELLA
	2145.16722	1	RONDELLA	RONDELLE	WASHER	SCHEIBE	ARANDELLA
	2145.17353	1	RONDELLA	RONDELLE	WASHER	SCHEIBE	ARANDELLA
	10514.05500.00	1	VITE	VIS	SCREW	SCHRAUBE	TORNILLO
	10536.65028.00	1	REGOLATORE	GROUPE REGULATEUR	REGULATOR	REGLERGRUPPE	REGULADOR-DISYUNTOR
	10536.65170.00	1	CONNETTORE	CONNECTEUR	CONNECTOR	ANSCHLUSSTUECK	CONECTADOR
	10600.05604.00	1	RONDELLA	RONDELLE	WASHER	SCHEIBE	ARANDELLA
	11610.05060.03	1	ALTERNATORE	ALTERNATEUR	ALTERNATOR	ALTERNATOR	ALTERNADOR
	11610.05068.04	1	PROTEZIONE	PROTECTEUR	PROTECTION	SCHUTZ	PROTECCION
	11610.05170.00	3	GOMMINO	CAOUTCHOUC	GROMMET	GUMMITEIL	GOMITA
	11610.05171.01	3	DISTANZIALE	ENTRETOISE	SPACER	ABSTANDSTUECK	SEPARADOR
	11610.05172.00	1	GOMMINO	CAOUTCHOUC	GROMMET	GUMMITEIL	GOMITA
	11610.05503.00	1	SUPPORTO	SUPPORT	SUPPORT	LAGERUNG	SOPORTE

PARTICOLARI DELL'ALTERNATORE
DETAIL DE L'ALTERNATEUR
ALTERNATOR COMPONENTS
EINZELTEILE DES ALTERNATORS
PIEZAS DEL ALTERNADOR

BOSCH

TAV. 43.02

1ª EDIZIONE APRILE 1974
1re EDITION AVRIL 1974
1st EDITION APRIL 1974
1. AUSGABE APRIL 1974
1ª EDICION ABRIL 1974

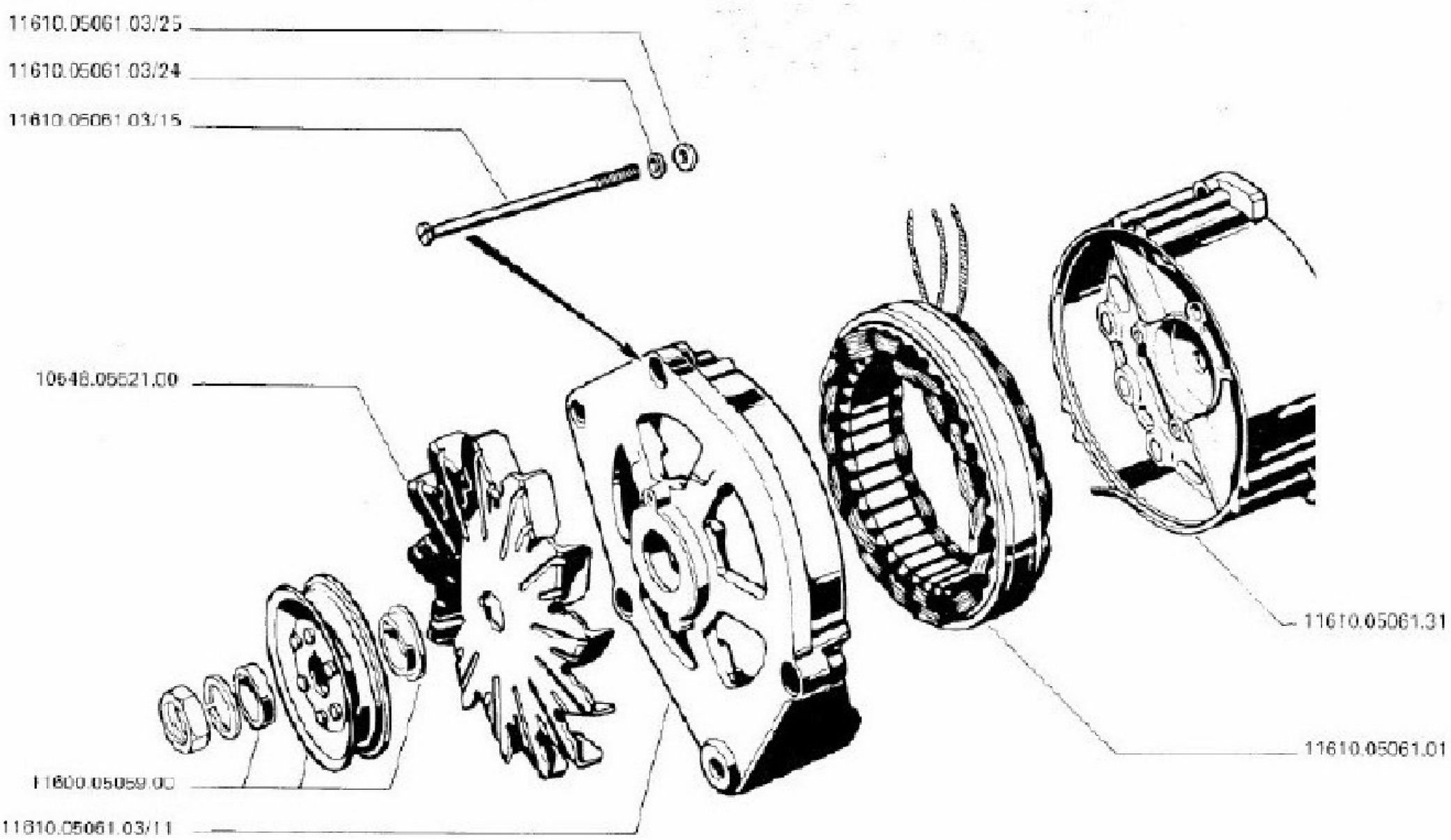

TAV. 43.02/0

PARTICOLARI DELL ALTERNATORE - BOSCH
DETAIL DE L ALTERNATEUR
ALTERNATOR COMPONENTS
EINZELTEILE DES ALTERNATORS
PIEZAS DEL ALTERNADOR

MODIFICA	N. ORDINAZIONE	QT.	DENOMINAZIONE	DÉSIGNATION	DESCRIPTION	BENENNUNG	DENOMINACIONES
	10548.0552L.00	1	VENTOLA	VENTILATEUR	FAN	LUEFTER	ROTOR VENTILADOR
	11600.0505S.00	1	PULEGGIA	POULIE	PULLEY	RIEMENSCHEIBE	POLEA
	11610.0506L.03/01	1	AVVOLGIMENTO	ENROULEMENT	WINDING	WICKLUNG	BOBINADO
	11610.0506L.03/11	1	SUPPORTO	SUPPORT	SUPPORT	LAGERUNG	SOPORTE
	11610.0506L.03/15	3	VITE	VIS	SCREW	SCHRAUBE	TORNILLO
	11610.0506L.03/24	3	RONDELLA	RONDELLE	WASHER	SCHEIBE	ARANDELLA
	11610.0506L.03/25	3	RONDELLA	RONDELLE	WASHER	SCHEIBE	ARANDELLA
	11610.0506L.03/31	1	SUPPORTO ANELLI	SUPPORT	SUPPORT	LAGERUNG	SOPORTE

PARTICOLARI DELL'ALTERNATORE
DETAIL DE L'ALTERNATEUR
ALTERNATOR COMPONENTS
EINZELTEILE DES ALTERNATORS
PIEZAS DEL ALTERNADOR

BOSCH

TAV. 43.02/1

1ª	EDIZIONE	1974	APRILE	
2ª	EDITION		AVRIL	
3ª	EDITION		APRIL	
	AUSGABE		APRIL	
1ª	EDICION		ABRIL	

AGGIORNAMENTO

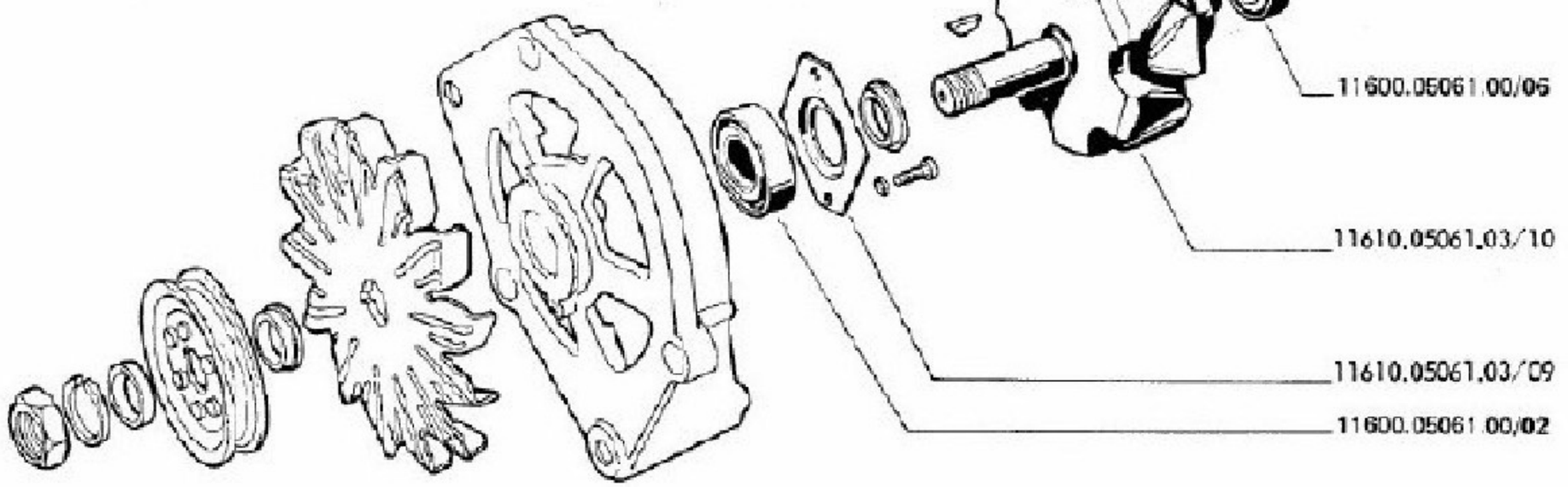

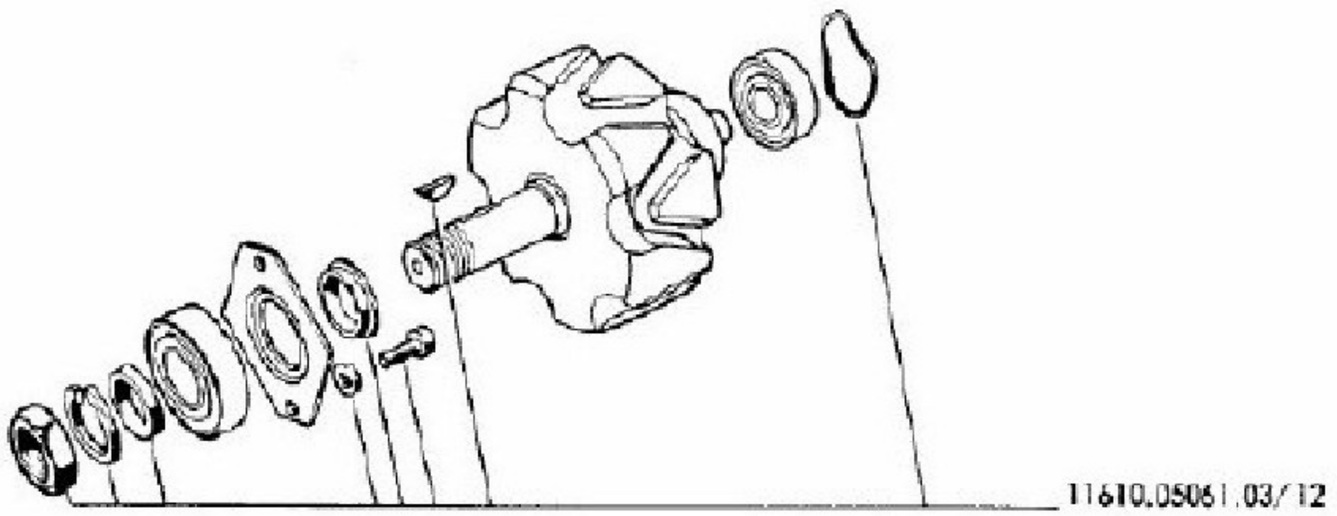

N. 6867

Alfetta GT

TAV. 43.02/L

PARTICOLARI DELL ALTERNATORE – BOSCH
DETAIL DE L ALTERNATEUR
ALTERNATOR COMPONENTS
EINZELTEILE DES ALTERNATORS
PIEZAS DEL ALTERNADOR

MODIFICA	N. ORDINAZIONE	QT.	DENOMINAZIONE	DESIGNATION	DESCRIPTION	BENENNUNG	DENOMINACIONES
	11600.05061.00/02	1	CUSCINETTO	ROULEMENT	BEARING	LAGER	COJINETE
	11600.05061.00/06	1	CUSCINETTO	ROULEMENT	BEARING	LAGER	COJINETE
	11610.05061.03/09	1	COPERCHIO	COUVERCLE	COVER	DECKEL	TAPA
	11610.05061.03/10	1	ROTORE	ROTOR	ROTOR	ROTOR	ROTOR
	11610.05061.03/12	1	ACCESSORI ROTORE	ROTOR	ROTOR	ROTOR	ROTOR
	11610.05061.03/29	1	ANELLO COLLETTORE	BAGUE	RING	RING	ANILLO

PARTICOLARI DELL'ALTERNATORE
DETAIL DE L'ALTERNATEUR
ALTERNATOR COMPONENTS
EINZELTEILE DES ALTERNATORS
PIEZAS DEL ALTERNADOR

BOSCH

TAV. 43.02/2

1ª	EDIZIONE	1974	APRILE
1ère	EDITION		AVRIL
1st	EDITION		APRIL
1.	AUSGABE		APRIL
1ª	EDICION		ABRIL

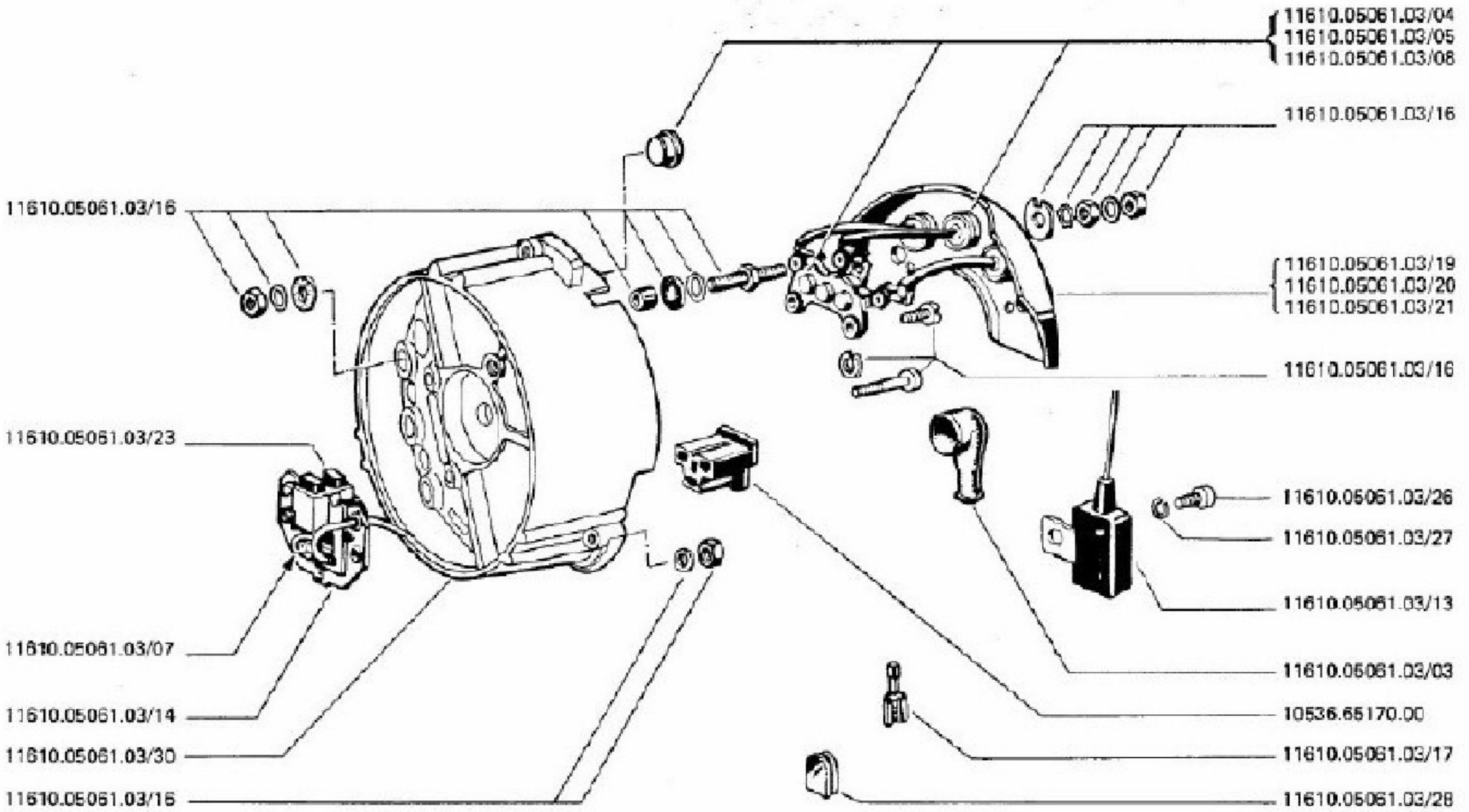

TAV. 43.02/2

PARTICOLARI DELL ALTERNATORE - BOSCH
DETAIL DE L ALTERNATEUR
ALTERNATOR COMPONENTS
EINZELTEILE DES ALTERNATORS
PIEZAS DEL ALTERNADOR

MODIFICA	N. ORDINAZIONE	QT	DENOMINAZIONE	DESIGNATION	DESCRIPTION	BENENNUNG	DENOMINACIONES
	10536.65170.00	1	CONNETTORE	CONNECTEUR	CONNECTOR	ANSCHLUSSTUECK	CONECTADOR
	11610.05061.03/03	1	CAPPUCCIO	CAPUCHON PROTECTEUR	PROTECTIVE CAP	SCHUTZKAPPE	CASQUILLO PROTECTOR
	11610.05061.03/04	3	DIODO POTENZA +	DIODE	DIODE	DIODE	DIODO
	11610.05061.03/05	3	DIODO ECCITAZIONE	DIODE	DIODE	DIODE	DIODO
	11610.05061.03/07	2	MOLLA SPAZZOLA	RESSORT D'ARRET	CHECK SPRING	SPRENGRING	MUELLE DE RETENCION
	11610.05061.03/08	3	DIODO POTENZA -	DIODE	DIODE	DIODE	DIODO
	11610.05061.03/13	1	CONDENSATORE	CONDENSATEUR	CONDENSER	KONDENSATOR	CONDENSADOR
	11610.05061.03/14	1	PORTASPAZZOLE	PORTE-BALAI	BRUSH HOLDER	BUERSTENTRAEGER	PORTACEPILLOS
	11610.05061.03/16	1	ACCESSORI MORSETTO	BORNE	TERMINAL	KLEMME	BORNE
	11610.05061.03/17	6	CAPOCORDA	COSSE	TERMINAL	KABELSCHUH	CAPOCUERDA
	11610.05061.03/19	1	PIASTRA COMPL.	PLAQUE	PLATE	PLATTE	PLACA
	11610.05061.03/20	1	PIASTRA DIODI POTENZ	PLAQUE	PLATE	PLATTE	PLACA
	11610.05061.03/21	1	PIASTRA DIODI ECCITA	PLAQUE	PLATE	PLATTE	PLACA
	11610.05061.03/23	1	SERIE SPAZZOLE	COLLECTION BALAIS	SET OF BRUSHES	BUERSTENSATZ	SERIE CEPILLOS
	11610.05061.03/26	1	VITE	VIS	SCREW	SCHRAUBE	TORNILLO
	11610.05061.03/27	1	RONDELLA	RONDELLE	WASHER	SCHEIBE	ARANDELLA
	11610.05061.03/28	1	GUARNIZIONE	JOINT D ETANCHEITE	SEAL	DICHTUNG	GUARNICION
	11610.05061.03/30	1	SUPPORTO COMPL.	SUPPORT	SUPPORT	LAGERUNG	SOPORTE

ALTERNATORE
ALTERNATEUR
ALTERNATOR
ALTERNATOR
ALTERNADOR

MARCHAL

TAV. 43.07

1ª EDIZIONE 1ère EDITION 1st EDITION AUSGABE 1ª EDICION — APRILE AVRIL APRIL APRIL ABRIL 1974

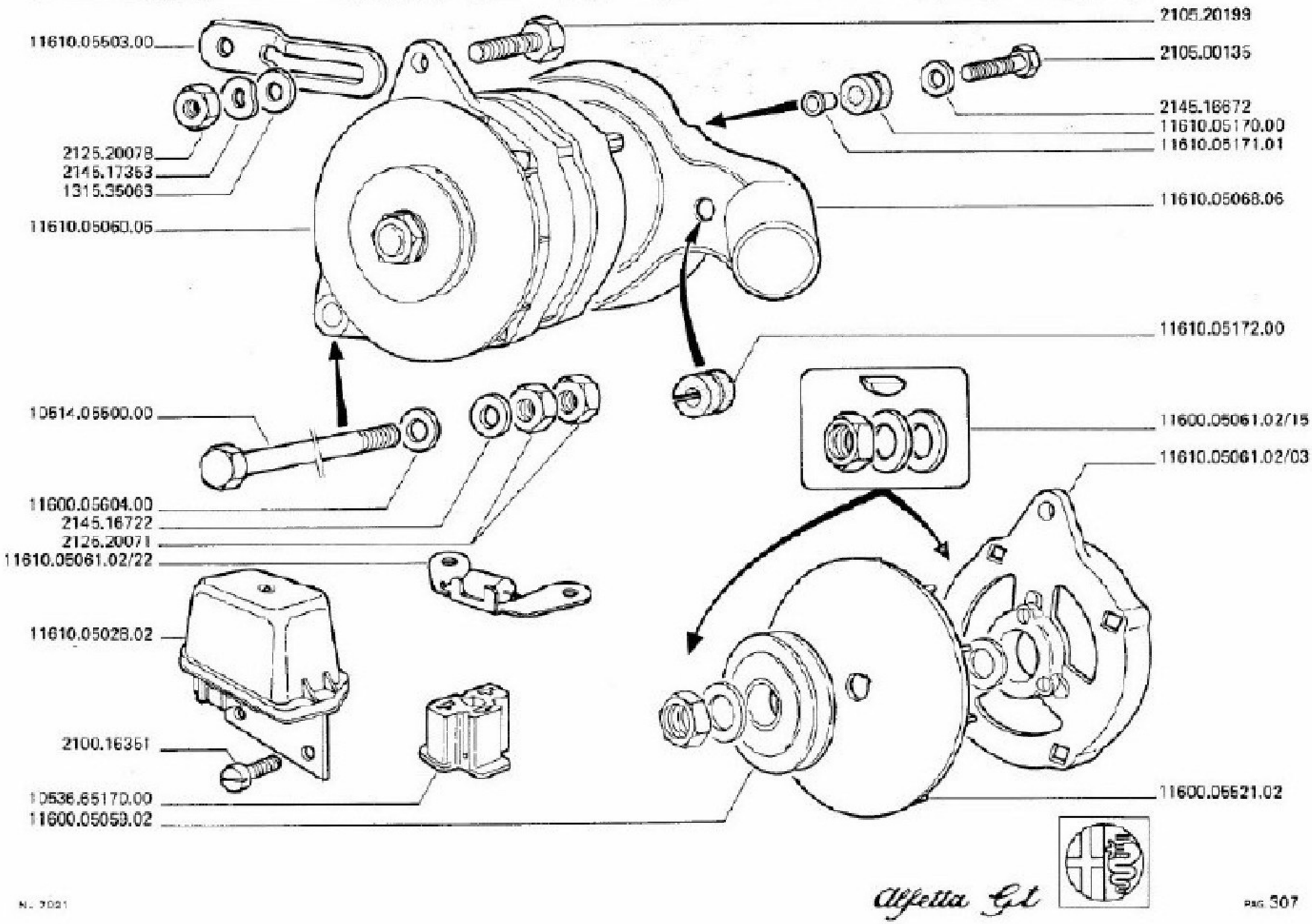

TAV. 43.07/0

ALTERNATORE -MARCHAL-
ALTERNATEUR
ALTERNATOR
ALTERNATOR
ALTERNADOR

MODIFICA	N. ORDINAZIONE	QT.	DENOMINAZIONE	DÉSIGNATION	DESCRIPTION	BENENNUNG	DENOMINACIONES
	1315.35063	1	RONDELLA	RONDELLE	WASHER	SCHEIBE	ARANDELLA
	2100.16351	2	VITE	VIS	SCREW	SCHRAUBE	TORNILLO
	2105.00135	3	DADO	ECROU	NUT	MUTTER	TUERCA
	2105.20199	1	VITE	VIS	SCREW	SCHRAUBE	TORNILLO
	2125.20071	2	DADO	ECROU	NUT	MUTTER	TUERCA
	2125.20078	1	DADO	ECROU	NUT	MUTTER	TUERCA
	2145.16672	3	RONDELLA	RONDELLE	WASHER	SCHEIBE	ARANDELLA
	2145.16722	1	RONDELLA	RONDELLE	WASHER	SCHEIBE	ARANDELLA
	2145.17353	1	RONDELLA	RONDELLE	WASHER	SCHEIBE	ARANDELLA
	10514.05500.00	1	VITE	VIS	SCREW	SCHRAUBE	TORNILLO
	10536.65170.00	1	CONNETTORE	CONNECTEUR	CONNECTOR	ANSCHLUSSTUECK	CONECTADOR
	11600.05059.02	1	PULEGGIA	POULIE POUR COURROIE	BELT PULLEY	GURTSCHEIBE	POLEA DE CORREA
	11600.05521.02	1	VENTOLA	YENTILATEUR	FAN	LUEFTER	ROTOR VENTILADOR
	11600.05604.00	1	RONDELLA	RONDELLE	WASHER	SCHEIBE	ARANDELLA
	11610.05028.02	1	REGOLATORE	REGULATEUR DE TENSIO	VOLTAGE REGULATOR	SPANNUNGSREGLER	REGULADOR DE TENSION
	11610.05060.06	1	ALTERNATORE COMPL.	ALTERNATEUR	ALTERNATOR	ALTERNATOR	ALTERNADOR
	11610.05061.02/03	1	SUPPORTO ANTERIORE	SUPPORT	SUPPORT	LAGERUNG	SOPORTE
	11610.05061.02/15	1	ACCESSORI PULEGGIA	COLLECTION-REPARATIO	REPAIR KIT	GRUPPE ERSATZTEILE	GRUPO REPUESTOS
	11610.05061.02/22	1	RESIST.D AVVIAMENTO	RESISTANCE	RESISTOR	WIDERSTAND	RESISTENCIA
	11610.05068.06	1	PROTEZIONE	PROTECTEUR	PROTECTION	SCHUTZ	PROTECCION
	11610.05170.00	3	GOMMINO	CAOUTCHOUC	GROMMET	GUMMITEIL	GOMITA

ALTERNATORE
ALTERNATEUR
ALTERNATOR
ALTERNATOR
ALTERNADOR

MARCHAL

TAV. 43.07

1ª	EDIZIONE	APRILE	1974
1ère	EDITION	AVRIL	
1st	EDITION	APRIL	
1.	AUSGABE	APRIL	
1ª	EDICION	ABRIL	

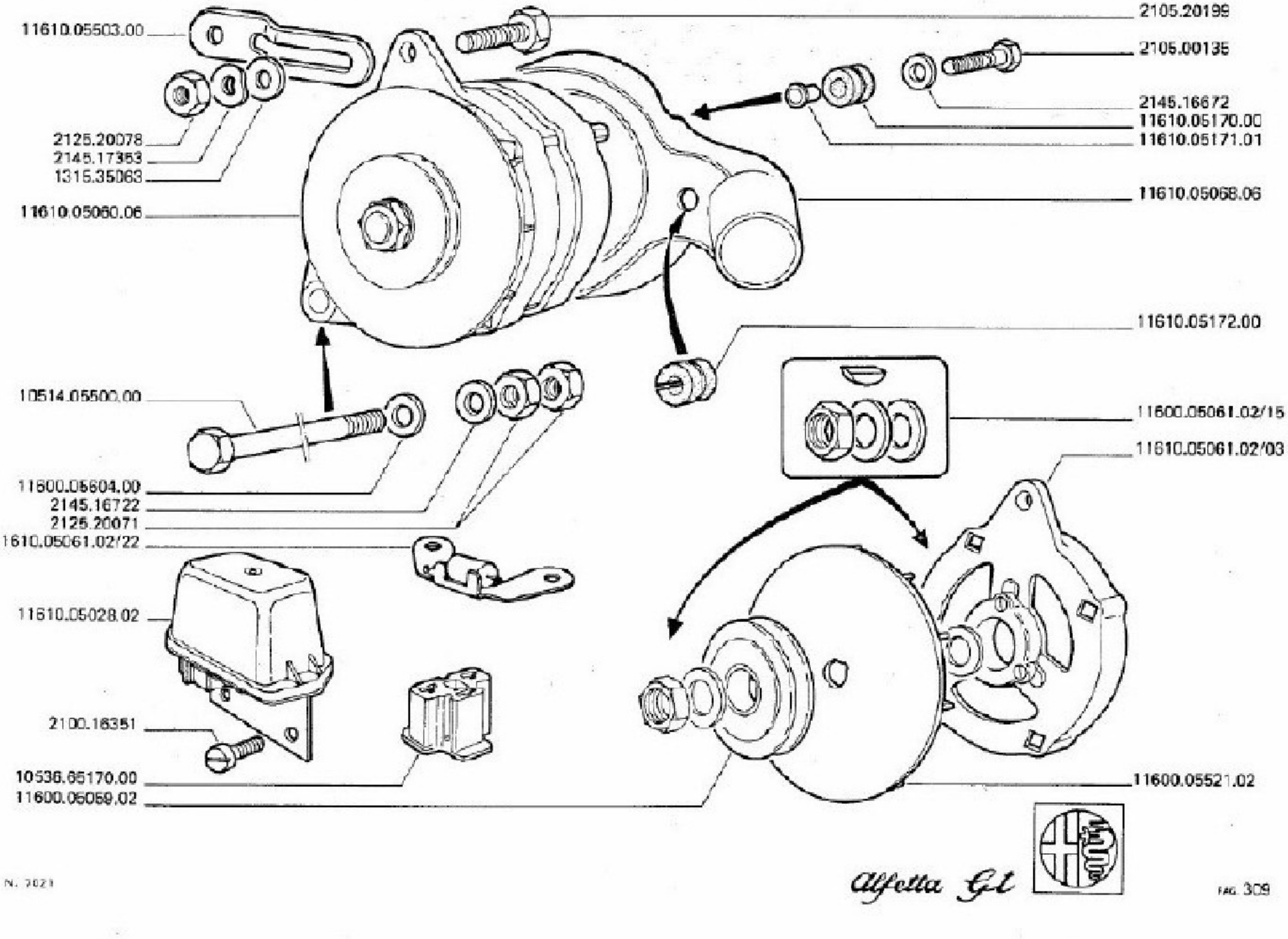

TAV. 43.07/0

ALTERNATORE -MARCHAL-
ALTERNATEUR
ALTERNATOR
ALTERNATOR
ALTERNADOR

MODIFICA	N. ORDINAZIONE	QT.	DENOMINAZIONE	DÉSIGNATION	DESCRIPTION	BENENNUNG	DENOMINACIONES
	11610.05171.01	3	DISTANZIALE	ENTRETOISE	SPACER	ABSTANDSTUECK	SEPARADOR
	11610.05172.00	1	GOMMINO	CAOUTCHOUC	GROMMET	GUMMITEIL	GOMITA
	11610.05503.00	1	SUPPORTO	SUPPORT	SUPPORT	LAGERUNG	SOPORTE

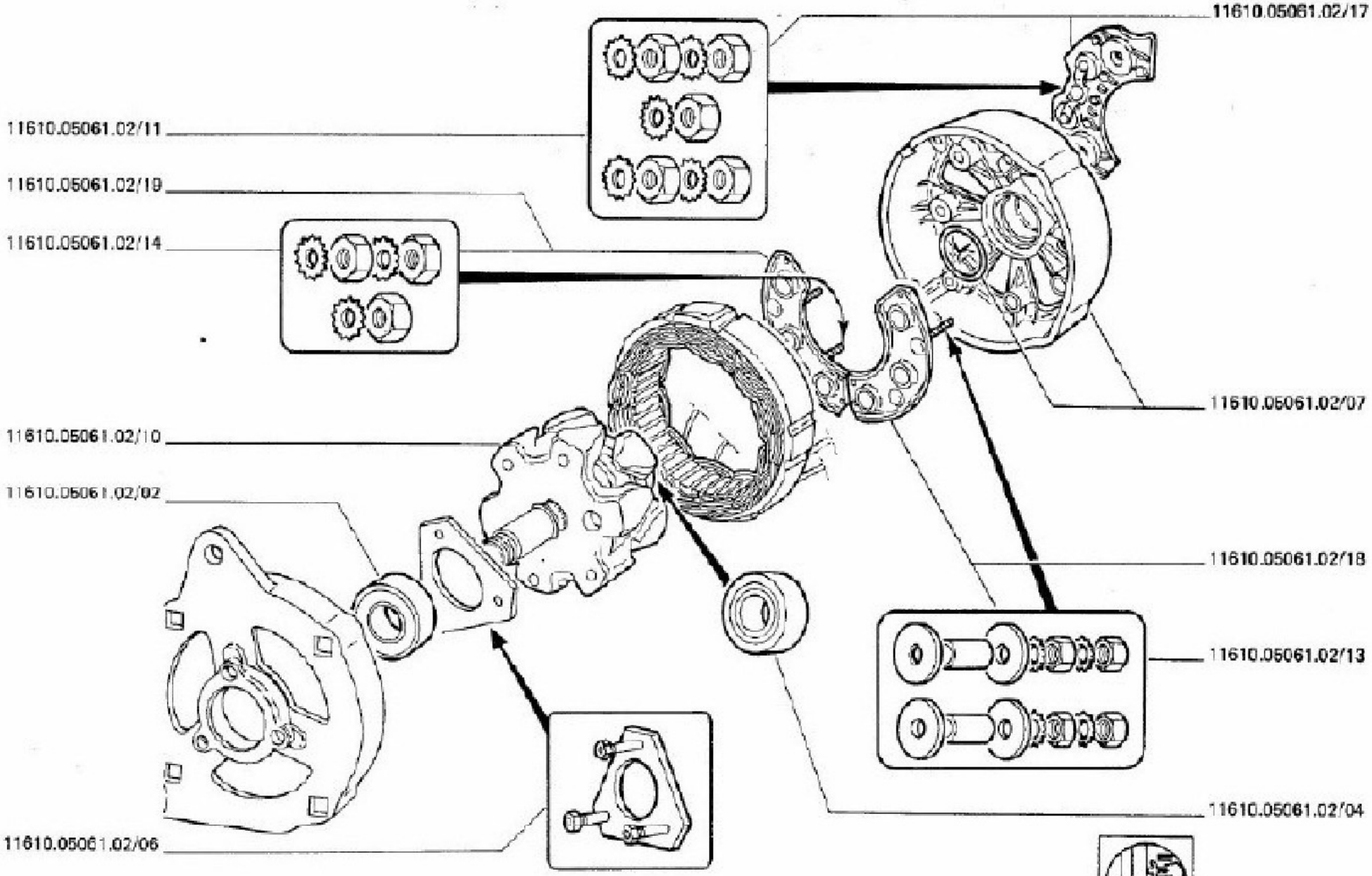
11610.05061.02/17
11610.05061.02/11
11610.05061.02/19
11610.05061.02/14
11610.05061.02/07
11610.05061.02/10
11610.05061.02/02
11610.05061.02/18
11610.05061.02/13
11610.05061.02/04
11610.05061.02/06

TAV. 43.07/1 ALTERNATORE -MARCHAL-
ALTERNATEUR
ALTERNATOR
ALTERNATOR
ALTERNADOR

MODIFICA	N. ORDINAZIONE	QT.	DENOMINAZIONE	DESIGNATION	DESCRIPTION	BENENNUNG	DENOMINACIONES
	11610.05061.02/02	1	CUSCINETTO ANT.	ROULEMENT A BILLES	BALL BEARING	KUGELLAGER	COJINETE DE BOLAS
	11610.05061.02/04	1	CUSCINETTO POST.	ROULEMENT A BILLES	BALL BEARING	KUGELLAGER	COJINETE DE BOLAS
	11610.05061.02/06	1	ACCESS.CUSCINETTO	COLLECTION-REPARATIO	REPAIR KIT	GRUPPE ERSATZTEILE	GRUPO REPUESTOS
	11610.05061.02/07	1	SUPPORTO POSTERIORE	SUPPORT	SUPPORT	LAGERUNG	SOPORTE
	11610.05061.02/10	1	ROTORE COMPLETO	ROTOR	ROTOR	ROTOR	ROTOR
	11610.05061.02/11	1	SR.FISS.PIASTRA	COLLECTION-REPARATIO	REPAIR KIT	GRUPPE ERSATZTEILE	GRUPO REPUESTOS
	11610.05061.02/13	1	SR.FISS.PIASTRA	COLLECTION-REPARATIO	REPAIR KIT	GRUPPE ERSATZTEILE	GRUPO REPUESTOS
	11610.05061.02/14	1	SR.FISS.PIASTRA	COLLECTION-REPARATIO	REPAIR KIT	GRUPPE ERSATZTEILE	GRUPO REPUESTOS
	11610.05061.02/17	1	PORTADIODI ISOLAMENT	PLAQUE PORTE-DIODE	DIODE HEAT SINK	DIODENTRAGERPLATTE	PORTADIODOS
	11610.05061.02/18	1	PORTADIODI POSITIVI	PLAQUE PORTE-DIODE	DIODE HEAT SINK	DIODENTRAGERPLATTE	PORTADIODOS
	11610.05061.02/19	1	PORTADIODI NEGATIVI	PLAQUE PORTE-DIODE	DIODE HEAT SINK	DIODENTRAGERPLATTE	PORTADIODOS

1ère EDIZIONE 1974 APRILE
1ère EDITION 1974 APRIL
1st EDITION 1974 APRIL
1. AUSGABE 1974 APRIL
1ra EDICION 1974 ABRIL

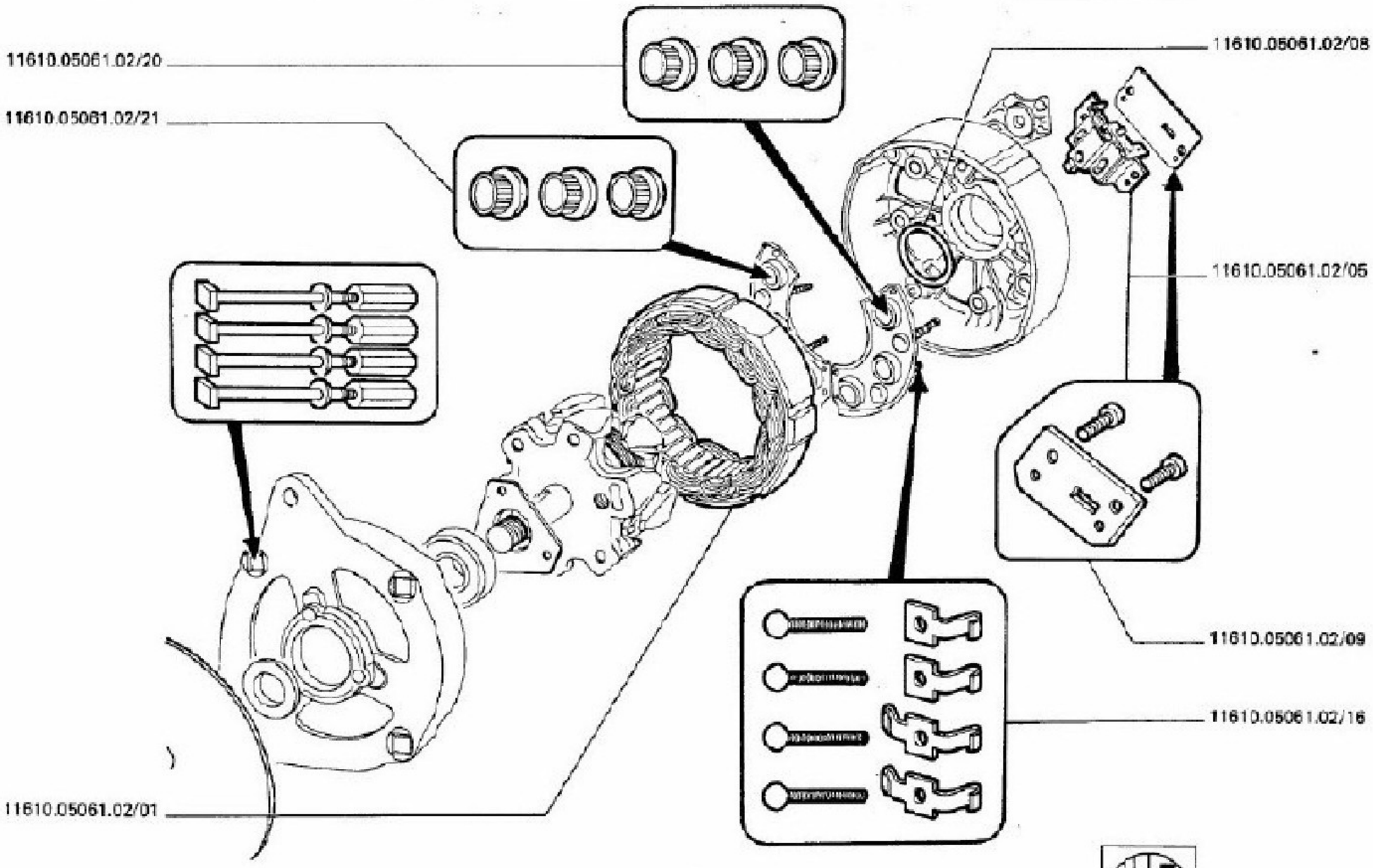

TAV. 49.07/2

ALTERNATORE -MARCHAL-
ALTERNATEUR
ALTERNATOR
ALTERNATOR
ALTERNADOR

MODIFICA	N. ORDINAZIONE	QT.	DENOMINAZIONE	DESIGNATION	DESCRIPTION	BENENNUNG	DENOMINACIONES
	11610.05061.02/01	1	STATORE COMPLETO	STATOR	STATOR	STARTER	ESTATOR
	11610.05061.02/05	1	PORTACARBONCINI COMP	PORTE-BALAI	CARBON BRUSH CARRIER	BURSTENHALTER	PORTAESCOBILLA
	11610.05061.02/08	1	ANELLO TENUTA	JOINT	SEAL	DICHTRING	JUNTA
	11610.05061.02/09	1	ACCESS.PORTACARB.	COLLECTION-REPARATIO	REPAIR KIT	GRUPPE ERSATZTEILE	GRUPO REPUESTOS
	11610.05061.02/16	1	ACCESS.PER STATORE	COLLECTION-REPARATIO	REPAIR KIT	GRUPPE ERSATZTEILE	GRUPO REPUESTOS
	11610.05061.02/20	1	SR.DIODI POSITIVI	COLLECTION DIODES	SET OF DIODES	DIODENSATZ	SERIE DIODOS
	11610.05061.02/21	1	SR.DIODI NEGATIVI	COLLECTION DIODES	SET OF DIODES	DIODENSATZ	SERIE DIODOS

ALTERNATORE
ALTERNATEUR
ALTERNATOR
ALTERNATOR
ALTERNADOR

PARIS RHONE

TAV. 40.00

1ª	EDIZIONE	APRILE	1974	
1ère	EDITION	AVRIL		
1st	EDITION	APRIL		
1.	AUSGABE	APRIL		
1ª	EDICION	ABRIL		

DATA DI STESA EDIZIONE AGGIORNAMENTO

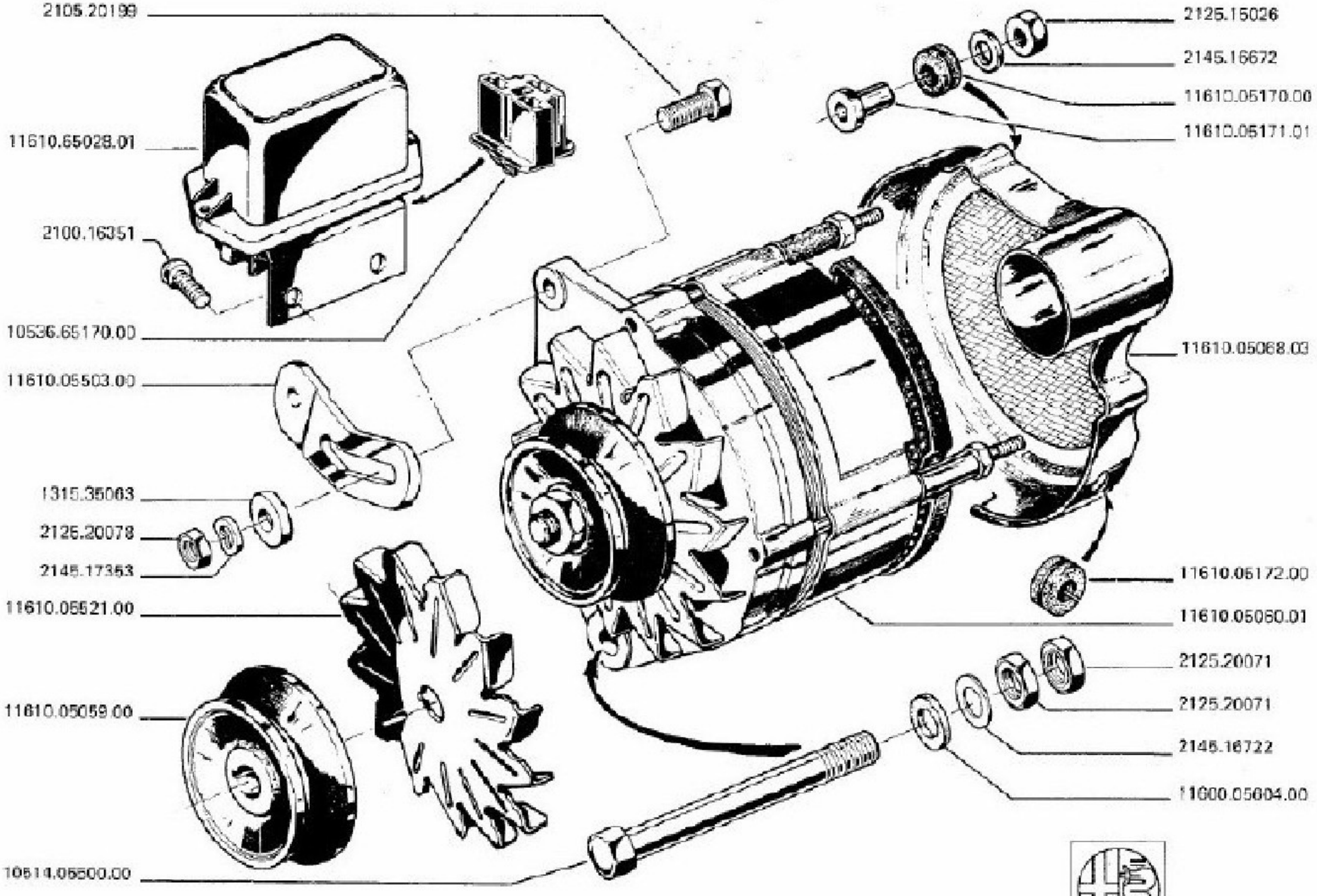

N. 7022

Alfetta GT

TAV. 43.08/0 ALTERNATORE -PARIS RHONE-
ALTERNATEUR
ALTERNATOR
ALTERNATOR
ALTERNADOR

MODIFICA	N. ORDINAZIONE	QT.	DENOMINAZIONE	DESIGNATION	DESCRIPTION	BENENNUNG	DENOMINACIONES
	1315.35063	1	RONDELLA	RONDELLE	WASHER	SCHEIBE	ARANDELLA
	2100.16351	2	VITE	VIS	SCREW	SCHRAUBE	TORNILLO
	2105.20199	1	VITE	VIS	SCREW	SCHRAUBE	TORNILLO
	2125.15026	3	DADO	ECROU	NUT	MUTTER	TUERCA
	2125.20071	2	DADO	ECROU	NUT	MUTTER	TUERCA
	2125.20078	1	DADO	ECROU	NUT	MUTTER	TUERCA
	2145.16672	3	RONDELLA	RONDELLE	WASHER	SCHEIBE	ARANDELLA
	2145.16722	1	RONDELLA	RONDELLE	WASHER	SCHEIBE	ARANDELLA
	2145.17353	1	RONDELLA	RONDELLE	WASHER	SCHEIBE	ARANDELLA
	10514.05500.00	1	VITE	VIS	SCREW	SCHRAUBE	TORNILLO
	10536.65170.00	1	CONNETTORE	CONNECTEUR	CONNECTOR	ANSCHLUSSTUECK	CONECTADOR
	11600.05604.00	1	RONDELLA	RONDELLE	WASHER	SCHEIBE	ARANDELLA
	11610.05059.00	1	PULEGGIA	POULIE POUR COURROIE	BELT PULLEY	GURTSCHEIBE	POLEA DE CORREA
	11610.05060.01	1	ALTERNATORE COMPL.	ALTERNATEUR	ALTERNATOR	ALTERNATOR	ALTERNADOR
	11610.05068.03	1	PROTEZIONE	PROTECTEUR	PROTECTION	SCHUTZ	PROTECCION
	11610.05170.00	3	GOMMINO	CAOUTCHOUC	GROMMET	GUMMITEIL	GOMITA
	11610.05171.01	3	DISTANZIALE	ENTRETOISE	SPACER	ABSTANDSTUECK	SEPARADOR
	11610.05172.00	1	GOMMINO	CAOUTCHOUC	GROMMET	GUMMITEIL	GOMITA
	11610.05503.00	1	SUPPORTO	SUPPORT	SUPPORT	LAGERUNG	SOPORTE
	11610.05521.00	1	VENTOLA	VENTILATEUR	FAN	LUEFTER	ROTOR VENTILADOR
	11610.65028.01	1	REGOLATORE	REGULATEUR DE TENSIO	VOLTAGE REGULATOR	SPANNUNGSREGLER	REGULADOR DE TENSION

PROIETTORE
PROJECTEUR
HEADLAMP
SCHEINWERFER
PROYECTOR

TAV. 44.09

1	EDIZIONE	1974	APRILE
	EDITION		AVRIL
	EDITION		APRIL
	AUSGABE		APRIL
	EDICION		ABRIL

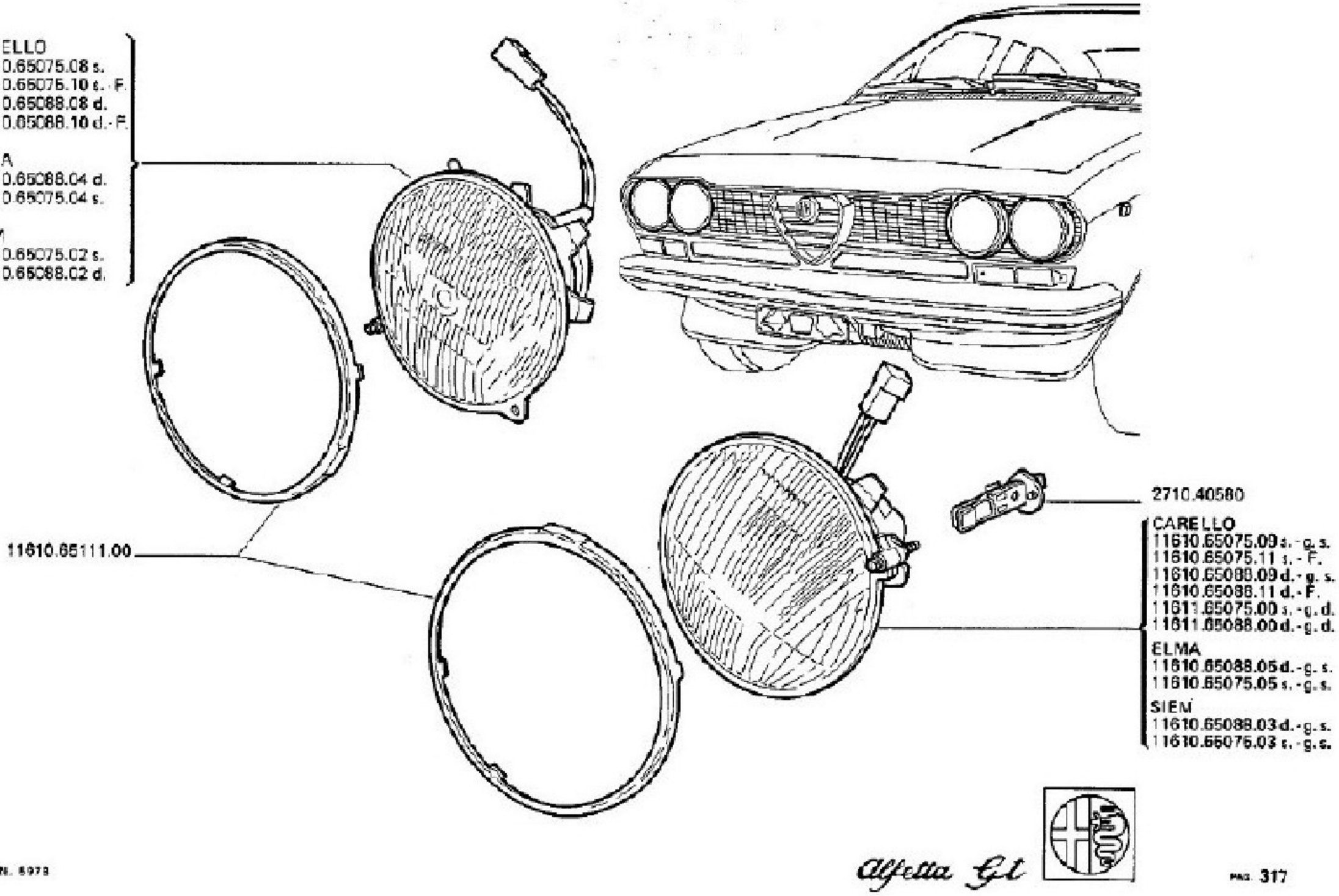

TAV. 44.0970

PROIETTORE
PROJECTEUR
HEADLAMP
SCHEINWERFER
PROYECTOR

MODIFICA	N. CODIFICAZIONE		QT.	DENOMINAZIONE	DESIGNATION	DESCRIPTION	BENENNUNG	DENOMINACIONES
	2710.40580		4	LAMPADINA	AMPOULE	BULB	LAMPE	BOMBILLA
	11610.65075.02		1	PROIETTORE ABBAGL.S.	PHARE ROUTE	HIGH BEAM HEADLAMP	FERNLICHT-SCHEINWERF	PROYECTOR DESLUMBRAN
	11610.65075.03	*	1	PROIETTORE ANABB.S.	PHARE NONEBLOUISSANT	ANTI GLARE HEADLAMP	BLENDFREIE LAMPE	FARO NODESLUMBRANTE
	11610.65075.04		1	PROIETTORE ABBAGL.S.	PHARE ROUTE	HIGH BEAM HEADLAMP	FERNLICHT-SCHEINWERF	PROYECTOR DESLUMBRAN
	11610.65075.05	*	1	PROIETTORE ANABB.S.	PHARE NONEBLOUISSANT	ANTI GLARE HEADLAMP	BLENDFREIE LAMPE	FARO NODESLUMBRANTE
	11610.65075.08		1	PROIETTORE ABBAGL.S.	PHARE ROUTE	HIGH BEAM HEADLAMP	FERNLICHT-SCHEINWERF	PROYECTOR DESLUMBRAN
	11610.65075.09	*	1	PROIETTORE ANABB.S.	PHARE NONEBLOUISSANT	ANTI GLARE HEADLAMP	BLENDFREIE LAMPE	FARO NODESLUMBRANTE
	11610.65075.10	.	1	PROIETTORE ABBAGL.S.	PHARE ROUTE	HIGH BEAM HEADLAMP	FERNLICHT-SCHEINWERF	PROYECTOR DESLUMBRAN
	11610.65075.11	.	1	PROIETTORE ANABB.S.	PHARE NONEBLOUISSANT	ANTI GLARE HEADLAMP	BLENDFREIE LAMPE	FARO NODESLUMBRANTE
	11610.65088.02		1	PROIETTORE ABBAGL.D.	PHARE ROUTE	HIGH BEAM HEADLAMP	FERNLICHT-SCHEINWERF	PROYECTOR DESLUMBRAN
	11610.65088.03	*	1	PROIETTORE ANABB.D.	PHARE NONEBLOUISSANT	ANTI GLARE HEADLAMP	BLENDFREIE LAMPE	FARO NODESLUMBRANTE
	11610.65088.04		1	PROIETTORE ABBAGL.D.	PHARE ROUTE	HIGH BEAM HEADLAMP	FERNLICHT-SCHEINWERF	PROYECTOR DESLUMBRAN
	11610.65088.05	*	1	PROIETTORE ANABB.D.	PHARE NONEBLOUISSANT	ANTI GLARE HEADLAMP	BLENDFREIE LAMPE	FARO NODESLUMBRANTE
	11610.65088.08		1	PROIETTORE ABBAGL.D.	PHARE ROUTE	HIGH BEAM HEADLAMP	FERNLICHT-SCHEINWERF	PROYECTOR DESLUMBRAN
	11610.65088.09	*	1	PROIETTORE ANABB.D.	PHARE NONEBLOUISSANT	ANTI GLARE HEADLAMP	BLENDFREIE LAMPE	FARO NODESLUMBRANTE
	11610.65088.10	.	1	PROIETTORE ABBAGL.D.	PHARE ROUTE	HIGH BEAM HEADLAMP	FERNLICHT-SCHEINWERF	PROYECTOR DESLUMBRAN
	11610.65088.11	.	1	PROIETTORE ANABB.D.	PHARE NONEBLOUISSANT	ANTI GLARE HEADLAMP	BLENDFREIE LAMPE	FARO NODESLUMBRANTE
	11610.65111.00		4	CORNICE PROIETTORE	ENJOLIVEUR	RIM	RAHEMEN	CORNISA
	11611.65075.00	§	1	PROIETTORE ANABB.S.	PHARE NONEBLOUISSANT	ANTI GLARE HEADLAMP	BLENDFREIE LAMPE	FARO NODESLUMBRANTE
	11611.65088.00	§	1	PROIETTORE ANABB.D.	PHARE NONEBLOUISSANT	ANTI GLARE HEADLAMP	BLENDFREIE LAMPE	FARO NODESLUMBRANTE

* PER G.S.
. F
§ PER G.D.

FANALINO ANTERIORE
LANTERNE AVANT
FRONT PARKING LIGHT
VORDERE BLINK - STANDLEUCHTE
LAMPARA ANTERIOR

TAV. 44.53

1ª	EDIZIONE	1974	APRILE
1ère	EDITION		AVRIL
1st	EDITION		APRIL
1.	AUSGABE		APRIL
1ère	EDICION		ABRIL

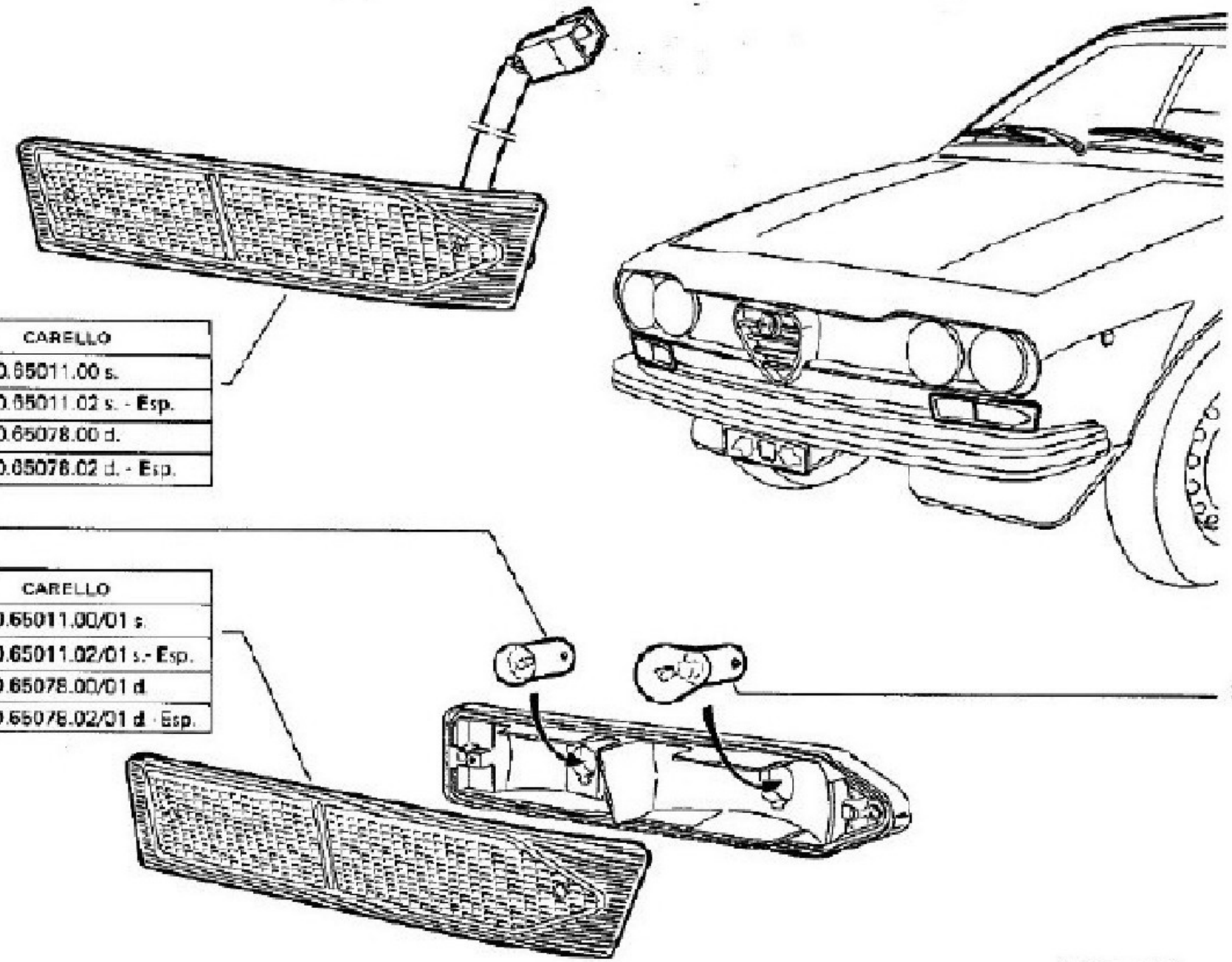

ALTISSIMO	CARELLO
11610.65011.01 s.	11610.65011.00 s.
	11610.65011.02 s. - Esp.
11610.65078.01 d.	11610.65078.00 d.
	11610.65078.02 d. - Esp.

ALTISSIMO	CARELLO
11610.65011.01/01 s.	11610.65011.00/01 s.
	11610.65011.02/01 s.- Esp.
11610.65078.01/01 d.	11610.65078.00/01 d.
	11610.65078.02/01 d. - Esp.

TAV. 44.53/0

FANALINO ANTERIORE
LANTERNE AVANT
FRONT PARKING LIGHT
VORDERE BLINK - STANDLEUCHTE
LAMPARA ANTERIOR

MODIFICA	N. ORDINAZIONE	QT.	DENOMINAZIONE	DESIGNATION	DESCRIPTION	BENENNUNG	DENOMINACIONES
	2710.40518	2	LAMPADINA	AMPOULE	BULB	LAMPE	BOMBILLA
	2710.40550	2	LAMPADINA	AMPOULE	BULB	LAMPE	BOMBILLA
	11610.65011.00	1	FANALINO COMPL.S.	PHARE	HEADLAMP	VORDERSCHEINWERFER	FARO DELANTERO
	11610.65011.00/01	1	TRASPARENTE S.	TRANSPARENT	GLASS FRAME	LICHTSCHEIBE	VIDRIO
	11610.65011.01	1	FANALINO COMPL.S.	AMPOULE	BULB	LAMPE	BOMBILLA
	11610.65011.01/01	1	TRASPARENTE S.	TRANSPARENT	GLASS FRAME	LICHTSCHEIBE	VIDRIO
	11610.65011.02 *	1	FANALINO COMPL.S.	PHARE	HEADLAMP	VORDERSCHEINWERFER	FARO DELANTERO
	11610.65011.02/01*	1	TRASPARENTE S.	TRANSPARENT	GLASS FRAME	LICHTSCHEIBE	VIDRIO
	11610.65078.00	1	FANALINO COMPL.D.	PHARE	HEADLAMP	VORDERSCHEINWERFER	FARO DELANTERO
	11610.65078.00/01	1	TRASPARENTE D.	TRANSPARENT	GLASS FRAME	LICHTSCHEIBE	VIDRIO
	11610.65078.01	1	FANALINO COMPL.D.	AMPOULE	BULB	LAMPE	BOMBILLA
	11610.65078.01/01	1	TRASPARENTE D.	TRANSPARENT	GLASS FRAME	LICHTSCHEIBE	VIDRIO
	11610.65078.02 *	1	FANALINO COMPL.D.	PHARE	HEADLAMP	VORDERSCHEINWERFER	FARO DELANTERO
	11610.65078.02/01*	1	TRASPARENTE D.	TRANSPARENT	GLASS FRAME	LICHTSCHEIBE	VIDRIO

* PER ESPORTAZIONE — POUR EXPORTATION — FOR EXPORT — FUR EXPORT — PARA EXPORTACION

FANALINO POSTERIORE
LANTERNE ARRIERE
TAIL LIGHT
PECKLEUCHTE
LAMPARA POSTERIOR

TAV. 44.63

1	EDIZIONE	1974	APRILE
	EDITION		AVRIL
	EDITION		APRIL
	AUSGABE		APRIL
	EDICION		ABRIL

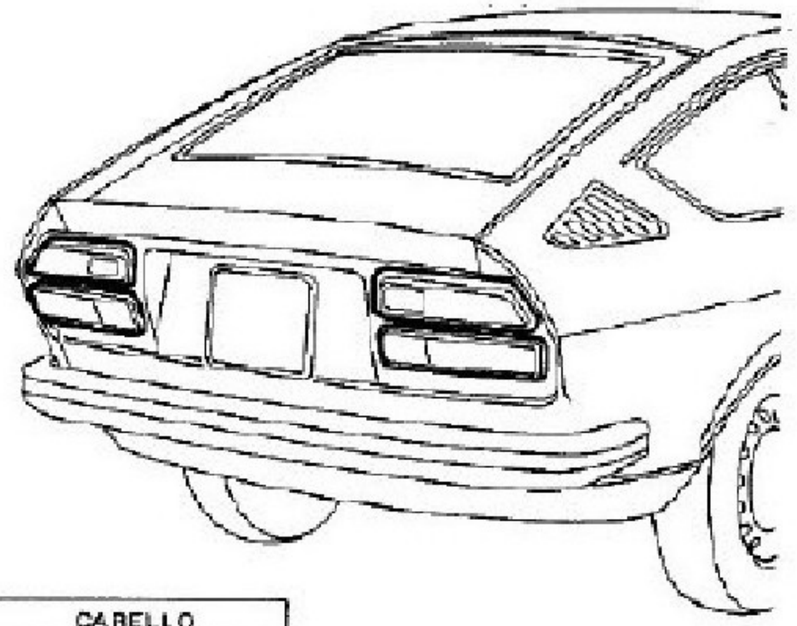

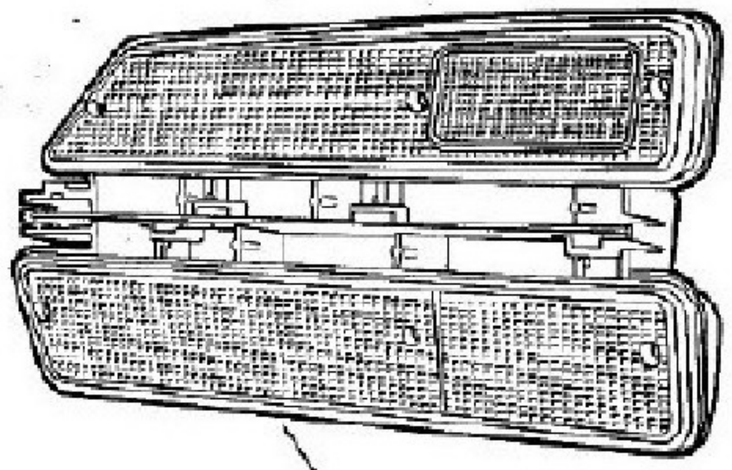

ALTISSIMO	CARELLO
11610.65012.01 d.	11610.65012.00 d.
11610.65081.01 s.	11610.65081.00 s.

ALTISSIMO	CARELLO
11610.65012.01/04 d.	11610.65012.00/04 d.
11610.65081.01/04 s.	11610.65081.00/04 s.

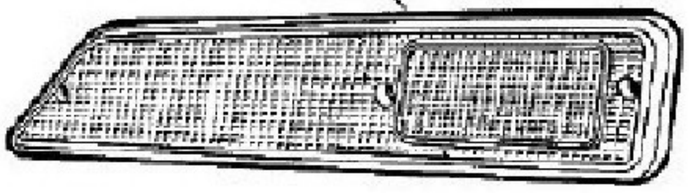

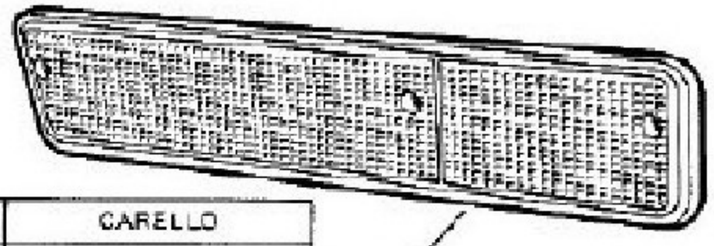

ALTISSIMO	CARELLO
11610.65012.01/02 d.	11610.65012.00/02 d.
11610.65081.01/02 s.	11610.65081.00/02 s.

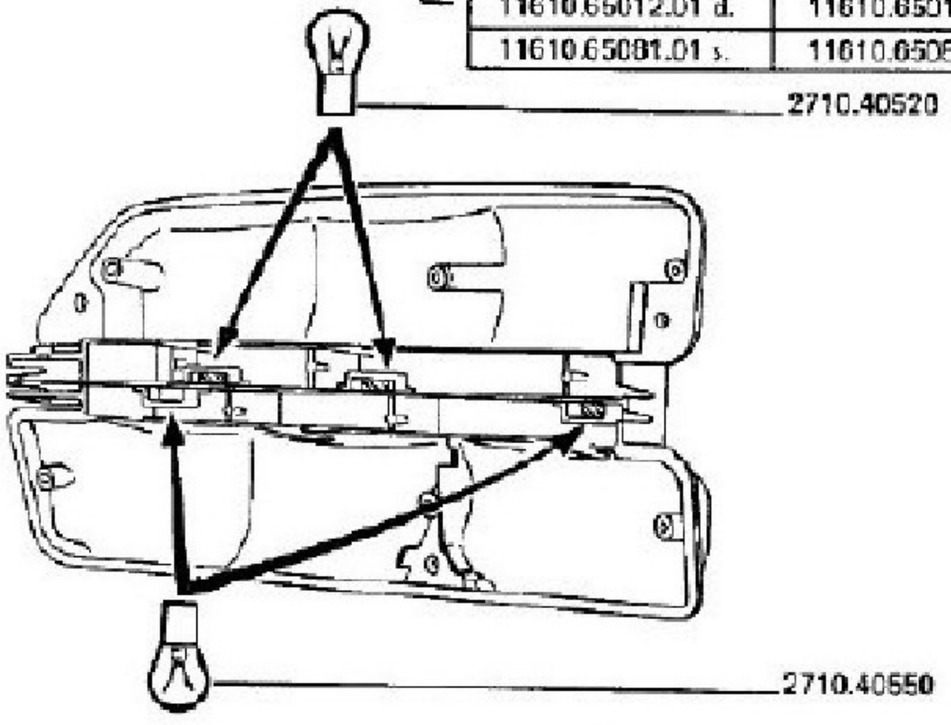

TAV. 44.63/0

FANALINO POSTERIORE
LANTERNE ARRIERE
TAIL LIGHT
PECKLEUCHTE
LAMPARA POSTERIOR

MODIFICA	N. ORDINAZIONE	QT.	DENOMINAZIONE	DESIGNATION	DESCRIPTION	BENENNUNG	DENOMINACIONES
	2710.40520	4	LAMPADINA	AMPOULE	BULB	LAMPE	BOMBILLA
	2710.40550	4	LAMPADINA	AMPOULE	BULB	LAMPE	BOMBILLA
	11610.65012.00	1	FANALINO COMPL.D.	FEU ARRIERE	TAIL LIGHT	HECKLEUCHTE	FARO POSTERIOR
	11610.65012.00/02	1	LENTE DIREZ.E RM D.	TRANSPARENT	GLASS FRAME	LICHTSCHEIBE	VIDRIO
	11610.65012.00/04	1	LENTE POSIZ.STOP D.	TRANSPARENT	GLASS FRAME	LICHTSCHEIBE	VIDRIO
	11610.65012.01	1	FANALINO COMPL.D.	FEU ARRIERE	TAIL LIGHT	HECKLEUCHTE	FARO POSTERIOR
	11610.65012.01/02	1	LENTE DIREZ.E RM D.	TRANSPARENT	GLASS FRAME	LICHTSCHEIBE	VIDRIO
	11610.65012.01/04	1	LENTE POSIZ.STOP D.	TRANSPARENT	GLASS FRAME	LICHTSCHEIBE	VIDRIO
	11610.65081.00	1	FANALINO COMPL.S.	FEU ARRIERE	TAIL LIGHT	HECKLEUCHTE	FARO POSTERIOR
	11610.65081.00/02	1	LENTE DIREZ.E RM S.	TRANSPARENT	GLASS FRAME	LICHTSCHEIBE	VIDRIO
	11610.65081.00/04	1	LENTE POSIZ.STOP S.	TRANSPARENT	GLASS FRAME	LICHTSCHEIBE	VIDRIO
	11610.65081.01	1	FANALINO COMPL.S.	FEU ARRIERE	TAIL LIGHT	HECKLEUCHTE	FARO POSTERIOR
	11610.65081.01/02	1	LENTE DIREZ.E RM S.	TRANSPARENT	GLASS FRAME	LICHTSCHEIBE	VIDRIO
	11610.65081.01/04	1	LENTE POSIZ.STOP S.	TRANSPARENT	GLASS FRAME	LICHTSCHEIBE	VIDRIO

FANALINO LATERALE
CLIGNOTANT LATERAL
SIDE DIRECTIONAL LIGHT
SEITLICHE BLINKLEUCHTE
LAMPARA LATERAL

TAV. 44.72

1	EDIZIONE	APRILE	1974
	EDITION	AVRIL	
	EDITION	APRIL	
	AUSGABE	APRIL	
	EDICION	ABRIL	

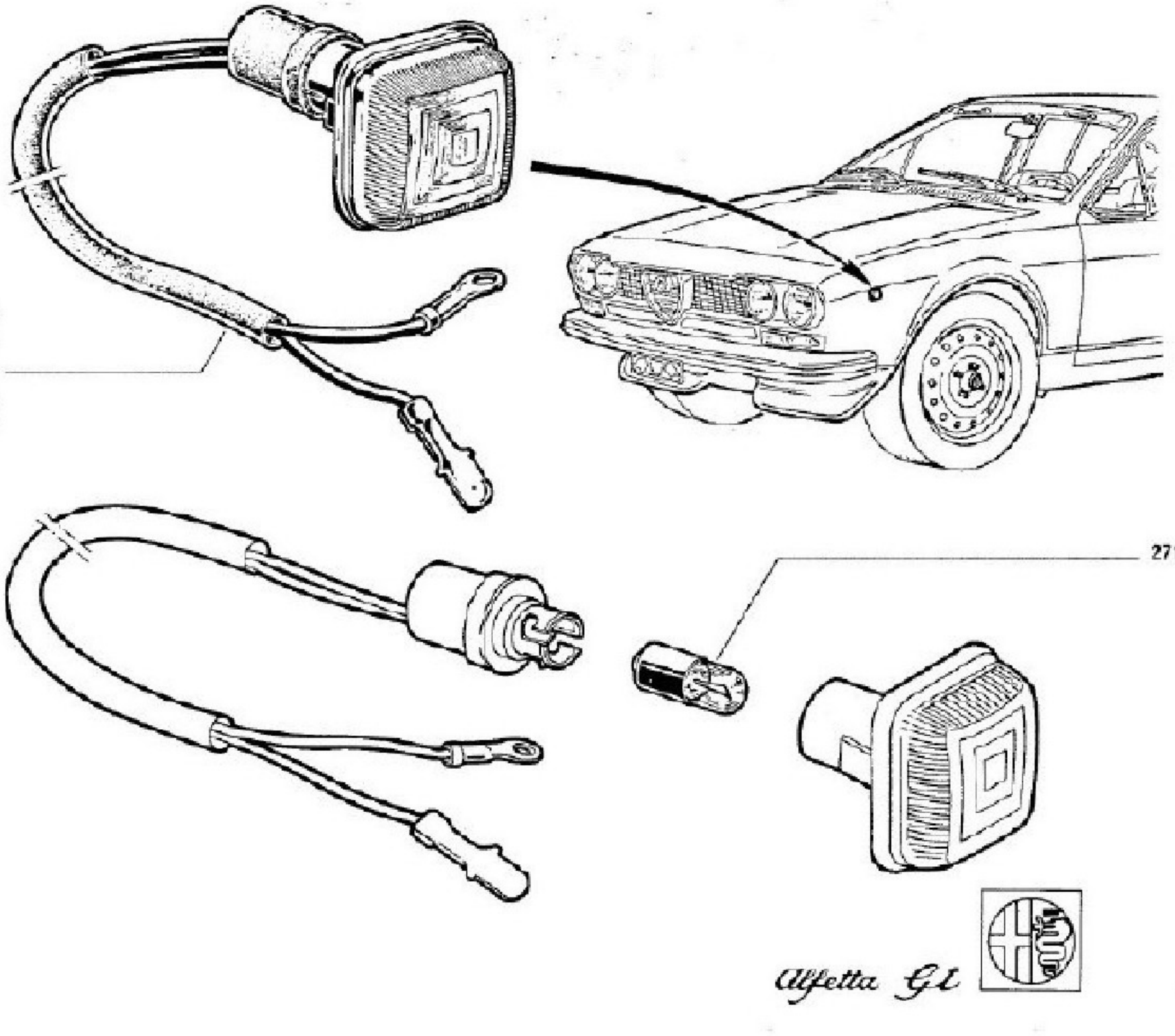

11600.65015.03	ALTISSIMO
11600.65015.02	CARELLO
11600.65015.05	OLSA
11600.65015.04	SEIMA

TAV. 44.7270

FANALINO LATERALE
CLIGNOTANT LATERAL
SIDE DIRECTIONAL LIGHT
SEITLICHE BLINKLEUCHTE
LAMPARA LATERAL

MODIFICA	N. ORDINAZIONE	QT.	DENOMINAZIONE	DESIGNATION	DESCRIPTION	BENENNUNG	DENOMINACIONES
	2710.40535	2	LAMPADINA	AMPOULE	BULB	LAMPE	BOMBILLA
	11600.65015.02	2	FANALINO COMPL.	INDICATEUR LATERAL	SIDE LIGHT	SEITENLEUCHTE	FARO LATERAL
	11600.65015.03	2	FANALINO COMPL.	INDICATEUR LATERAL	SIDE LIGHT	SEITENLEUCHTE	FARO LATERAL
	11600.65015.04	2	FANALINO COMPL.	INDICATEUR LATERAL	SIDE LIGHT	SEITENLEUCHTE	FARO LATERAL
	11600.65015.05	2	FANALINO COMPL.	INDICATEUR LATERAL	SIDE LIGHT	SEITENLEUCHTE	FARO LATERAL

FANALINO ILLUMINAZIONE TARGA
ECLAIREUR DE PLAQUE DE POLICE
LICENSE PLATE LIGHT
KENNZEICHENLEUCHTE
LAMPARA MATRICULA

TAV. 44.82

1.a	EDIZIONE	1974	APRILE
ère	EDITION		AVRIL
st	EDITION		APRIL
.	AUSGABE		APRIL
era	EDICION		ABRIL

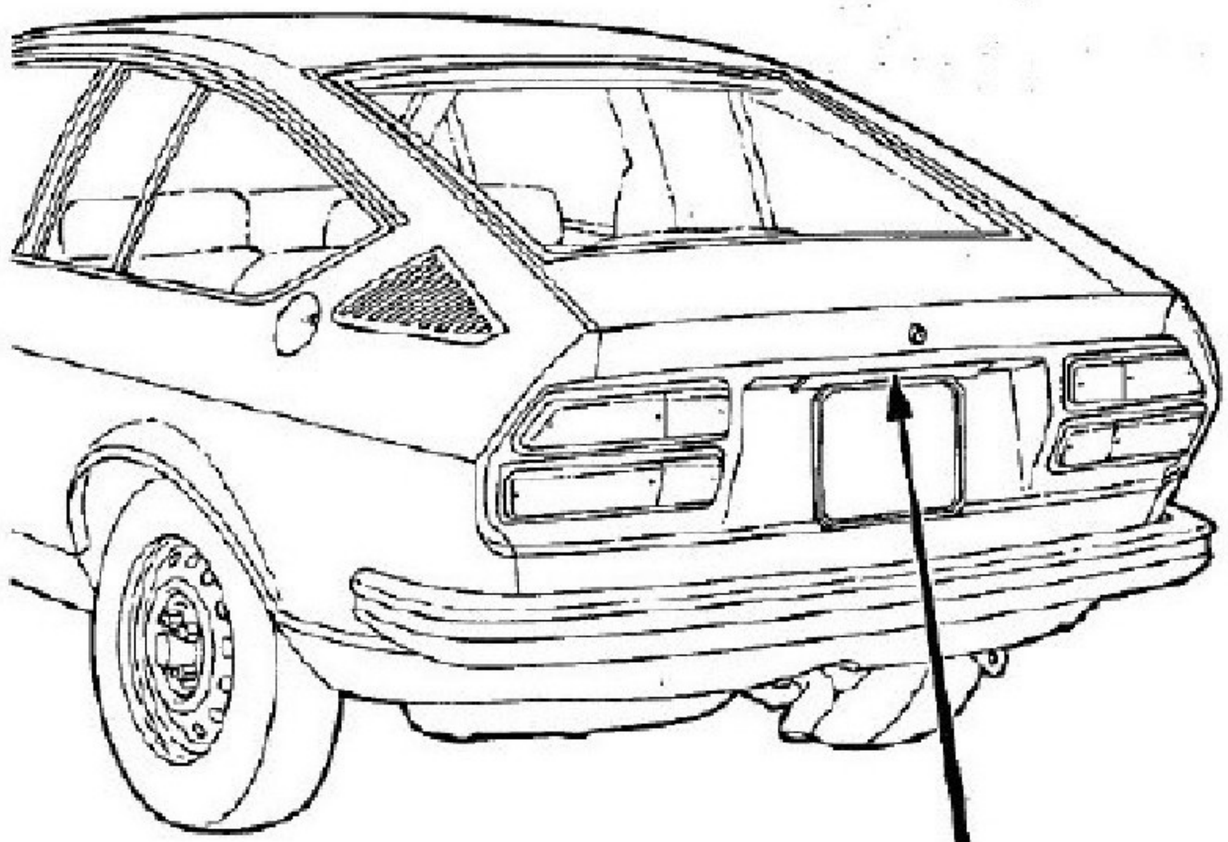

10541.59458.00

2102.16339

2710.40518

11614.65013.02 ALTISSIMO
11614.65013.00 CARELLO

TAV. 44.02/0 FANALINO ILLUMINAZIONE TARGA
ECLAIREUR DE PLAQUE DE POLICE
LICENSE PLATE LIGHT
KENNZEICHENLEUCHTE
LAMPARA MATRICULA

MODIFICA	N. ORDINAZIONE	QT.	DENOMINAZIONE	DESIGNATION	DESCRIPTION	BENENNUNG	DENOMINACIONES
	2102.16339	4	VITE	VIS TARAUD	SELF-TAPPING SCREW	BLECHSCHRAUBE	TORNILLO AUTORROSCAN
	2710.40518	2	LAMPADINA	AMPOULE	BULB	LAMPE	BOMBILLA
	10541.59458.00	4	MADREVITE	FILETAGE FEMELLE	FEMALE THREAD	INNENGEWINDE	ROSCA HEMBRA
	11614.65013.00	2	FANALINO COMPL.	ECLAIREUR	NUMBER PLATE LIGHT	KENNZEICHENLEUCHTE	FARO MATRICULA
	11614.65013.02	2	FANALINO COMPL.	ECLAIREUR	NUMBER PLATE LIGHT	KENNZEICHENLEUCHTE	FARO MATRICULA

TERGICRISTALLO
ESSUIE-GLACE
WINDSHIELD WIPER
SCHEIBENWISCHER
LIMPIA PARABRISAS

BOSCH

TAV. 46.01

1ª	EDIZIONE	1974	APRILE
1st	EDITION		APRIL
1re	EDITION		APRIL
1ª	AUSGABE		APRIL
1ª	EDICION		ABRIL

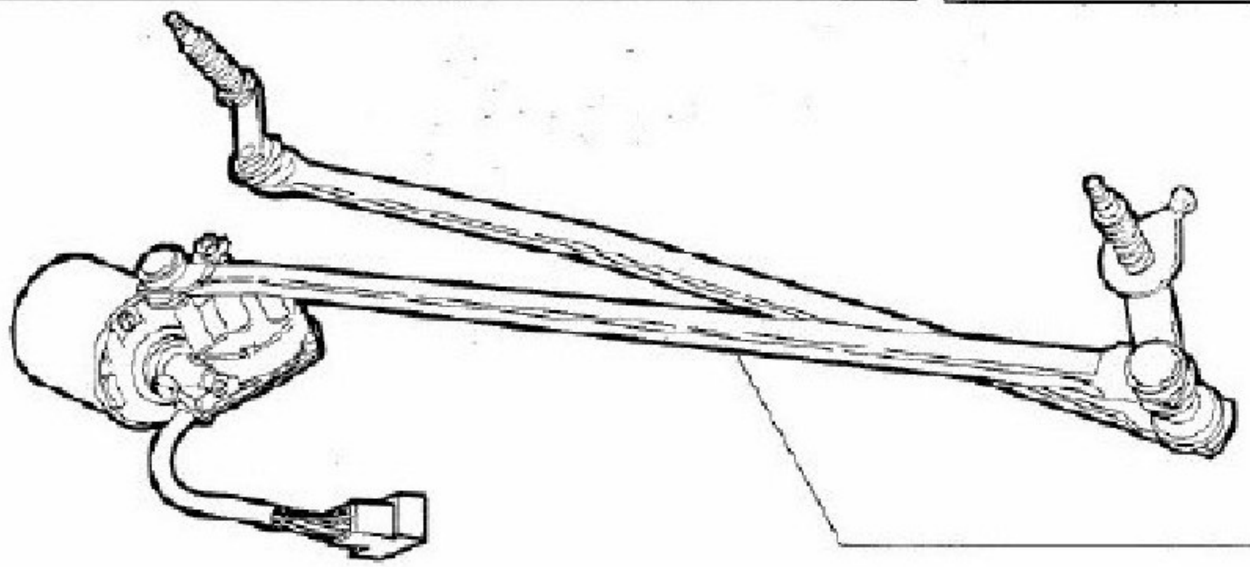

11610.65061.04 g. s. D
11610.65061.14 g. s. F
11611.65061.14 g. d.

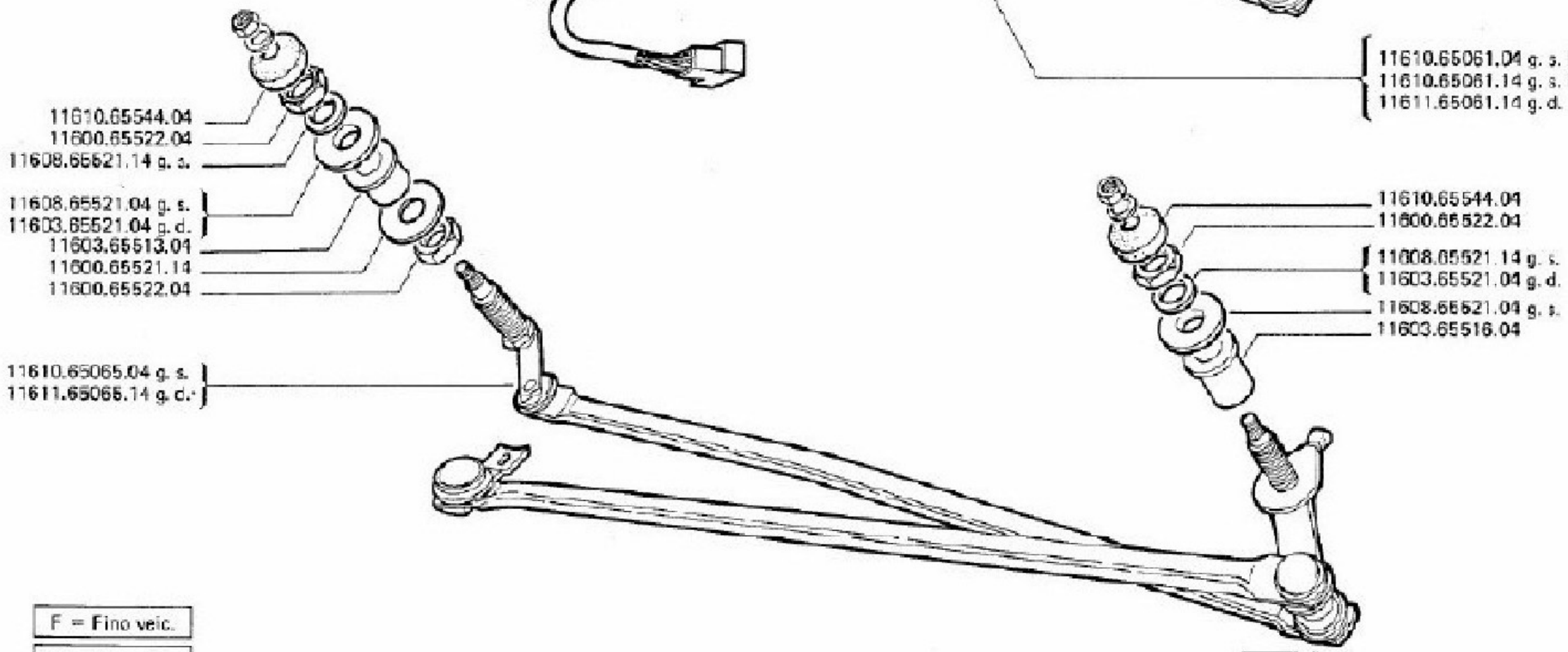

F = Fino veic.
D = Dal veic.

N. 7631

Alfetta GT

TAV. 45.0170

TERGICRISTALLO - BOSCH
ESSUIE-GLACE
WINDSHIELD WIPER
SCHEIBENWISCHER
LIMPIA PARABRISAS

MODIFICA	N. ORDINAZIONE	QT.	DENOMINAZIONE	DESIGNATION	DESCRIPTION	BENENNUNG	DENOMINACIONES
	11600.65521.14	1	RONDELLA	RONDELLE	WASHER	SCHEIBE	ARANDELLA
	11600.65522.04	3	DADO	ECROU	NUT	MUTTER	TUERCA
	11603.65513.04	1	DISTANZIALE	ENTRETOISE	SPACER	ABSTANDSTUECK	SEPARADOR
	11603.65516.04	1	DISTANZIALE	ENTRETOISE	SPACER	ABSTANDSTUECK	SEPARADOR
	11603.65521.04	* 2	RONDELLA	RONDELLE	WASHER	SCHEIBE	ARANDELLA
	11608.65521.04	. 2	RONDELLA	RONDELLE	WASHER	SCHEIBE	ARANDELLA
	11608.65521.14	. 2	RONDELLA	RONDELLE	WASHER	SCHEIBE	ARANDELLA
	11610.65061.04	. 1	TERGICRISTALLO	ESSUIE-GLACE	WINDSCREEN WIPER	SCHEIBENWISCHER	LIMPIACRISTALES
	11610.65061.14	. 1	TERGICRISTALLO	ESSUIE-GLACE	WINDSCREEN WIPER	SCHEIBENWISCHER	LIMPIACRISTALES
	11610.65065.04	. 1	MECCANISMO COMPL.	MECANISME	MECHANISM	MECHANISMUS	MECANISMO
	11610.65544.04	2	CAPPUCCIO	CAPUCHON	BOOT	KAPPE	CAPUCHON
	11611.65061.14	* 1	TERGICRISTALLO	ESSUIE-GLACE	WINDSCREEN WIPER	SCHEIBENWISCHER	LIMPIACRISTALES
	11611.65065.14	* 1	MECCANISMO COMPL.	MECANISME	MECHANISM	MECHANISMUS	MECANISMO

* PER G.D.
. PER G.S.

PARTICOLARI DEL TERGICRISTALLO
DETAIL DE L'ESSUIE-GLACE
WINDSHIELD WIPER COMPONENTS
EINZELTEILE DES SCHEIBENWISCHERS
PIEZAS DEL LIMPIA PARABRISAS

BOSCH

TAV. 45.02

1ª	EDIZIONE	APRILE	1974
1ère	EDITION	AVRIL	
1st	EDITION	APRIL	
1.	AUSGABE	APRIL	
1ª	EDICION	ABRIL	

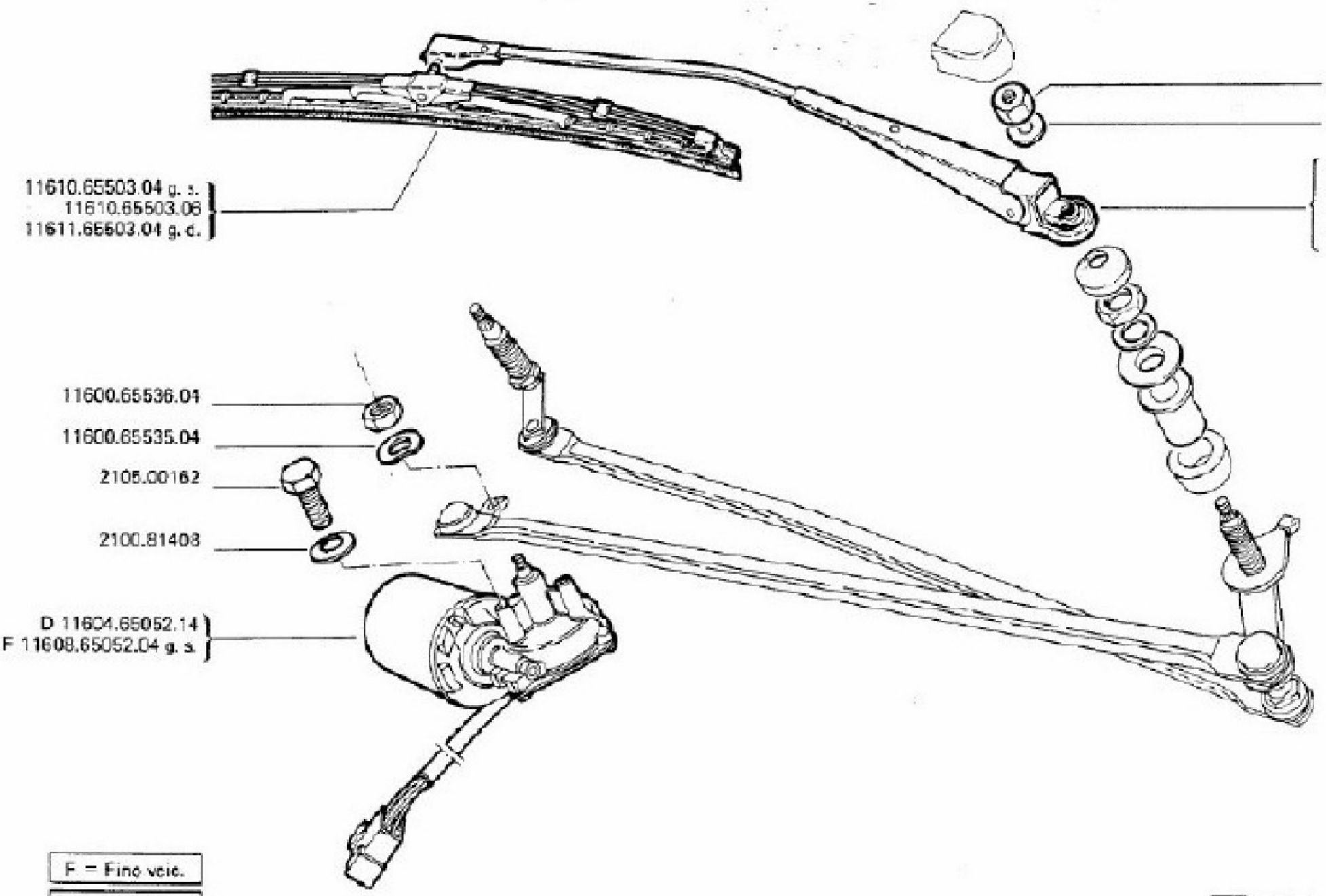

F = Fino veic.

D = Dal veic.

TAV. 45.020

PARTICOLARI DEL TERGICRISTALLO - BOSCH
DETAIL DE L ESSUIE-GLACE
WINDSHIELD WIPER COMPONENTS
EINZELTEILE DES SCHEIBENWISCHERS
PIEZAS DEL LIMPIA PARABRISAS

MODIFICA	N. ORDINAZIONE		QT	DENOMINAZIONE	DESIGNATION	DESCRIPTION	BENENNUNG	DENOMINACIONES
	2100.81408		3	RONDELLA	RONDELLE	WASHER	SCHEIBE	ARANDELLA
	2105.00162		3	VITE	VIS	SCREW	SCHRAUBE	TORNILLO
	11600.65535.04		1	RONDELLA	RONDELLE	WASHER	SCHEIBE	ARANDELLA
	11600.65536.04		1	DADO	ECROU	NUT	MUTTER	TUERCA
	11604.65052.14		1	MOTORINO	MOTEUR	MOTOR	GEBLAESEMOTOR	MOTOR VENTILADOR
	11608.65052.04	*	1	MOTORINO	MOTEUR	MOTOR	GEBLAESEMOTOR	MOTOR VENTILADOR
	11610.65503.04	*	2	SPAZZOLA BOSCH	RACLETTE	WIPER BLADE	WISCHERBLATT	LIMPIADOR
	11610.65503.06		2	SPAZZOLA CARELLO	RACLETTE	WIPER BLADE	WISCHERBLATT	LIMPIADOR
	11610.65504.04	*	2	BRACCIO BOSCH	BRAS ESSUIE-GLACE	WIPER ARM	WISCHERARM	BRAZO LIMPIAPARAB.
	11610.65504.06	*	2	BRACCIO CARELLO	BRAS ESSUIE-GLACE	WIPER ARM	WISCHERARM	BRAZO LIMPIAPARAB.
	11610.65519.04		2	RONDELLE	RONDELLE	WASHER	SCHEIBE	ARANDELLA
	11610.65566.04		2	DADO	ECROU	NUT	MUTTER	TUERCA
	11611.65503.04	-	2	SPAZZOLA BOSCH	RACLETTE	WIPER BLADE	WISCHERBLATT	LIMPIADOR
	11611.65504.04	-	2	BRACCIO BOSCH	BRAS ESSUIE-GLACE	WIPER ARM	WISCHERARM	BRAZO LIMPIAPARAB.
	11611.65504.06	-	2	BRACCIO CARELLO	BRAS ESSUIE-GLACE	WIPER ARM	WISCHERARM	BRAZO LIMPIAPARAB.

* PER G.S.
\- PER G.D.

1ª EDIZIONE APRILE 1974
1ère EDITION AVRIL
1st EDITION APRIL
1. AUSGABE APRIL
1ra EDICION ABRIL

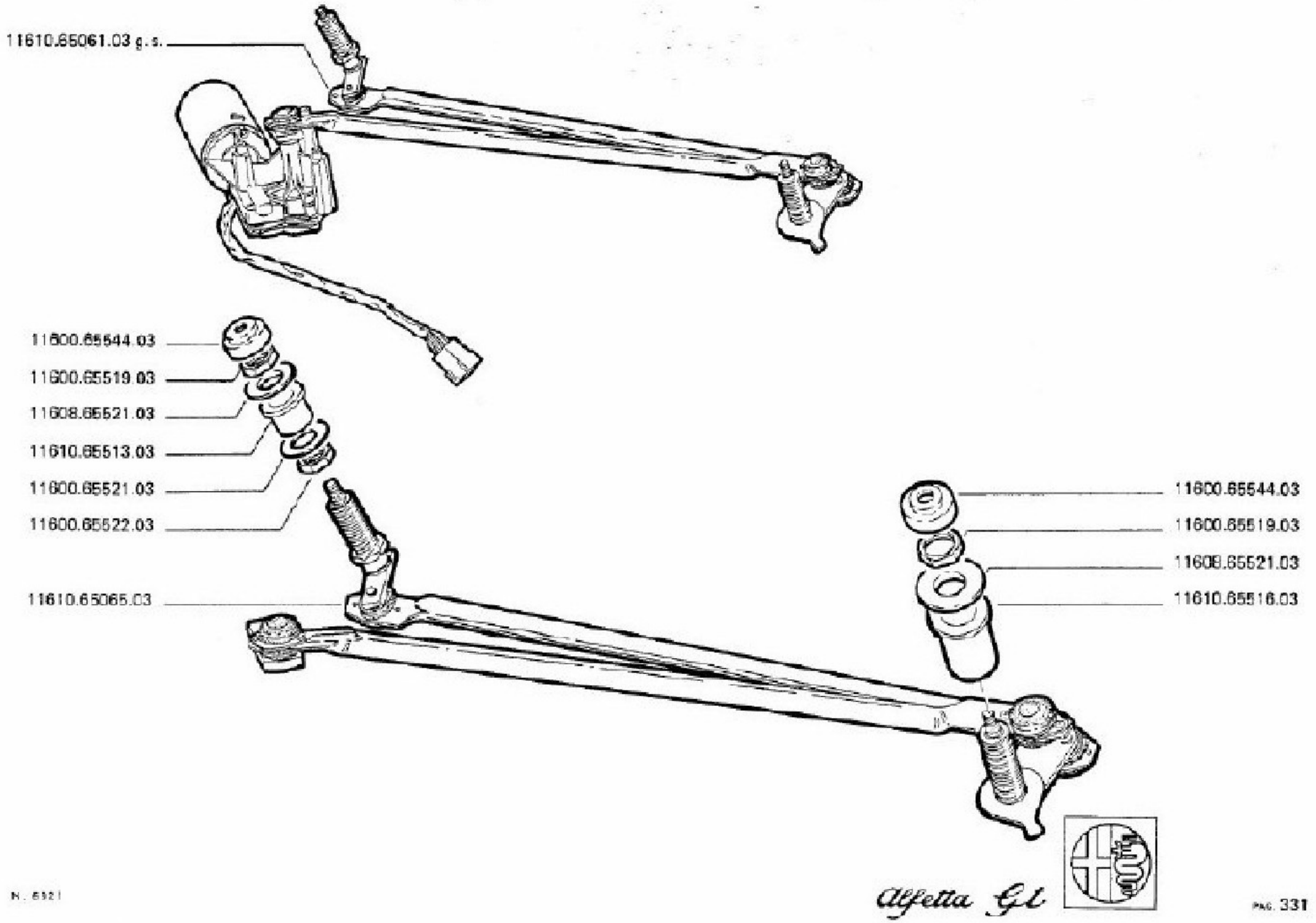

TAV. 43.07/0

TERGICRISTALLO - MARELLI
ESSUIE-GLACE
WINDSHIELD WIPER
SCHEIBENWISCHER
LIMPIA PARABRISAS

MODIFICA	N. ORDINAZIONE	QT.	DENOMINAZIONE	DESIGNATION	DESCRIPTION	BENENNUNG	DENOMINACIONES
	11600.65519.03 *	2	DADO	ECROU	NUT	MUTTER	TUERCA
	11600.65521.03 *	1	RONDELLA	RONDELLE	WASHER	SCHEIBE	ARANDELLA
	11600.65522.03 *	1	DADO	ECROU	NUT	MUTTER	TUERCA
	11600.65564.03 *	2	CAPPUCCIO	CHAPEAU PARE-POUSSIE	DUST CAP	SCHUTZKAPPE	CAPUCHON
	11608.65521.03 *	2	RONDELLA	RONDELLE	WASHER	SCHEIBE	ARANDELLA
	11610.65061.03 *	1	TERGICRISTALLO	ESSUIE-GLACE	WINDSCREEN WIPER	SCHEIBENWISCHER	LIMPIACRISTALES
	11610.65065.03 *	1	MECCANISMO COMPL.	MECANISME	MECHANISM	MECHANISMUS	MECANISMO
	11610.65513.03 *	1	DISTANZIALE	ENTRETOISE	SPACER	ABSTANDSTUECK	SEPARADOR
	11610.65516.03 *	1	DISTANZIALE	ENTRETOISE	SPACER	ABSTANDSTUECK	SEPARADOR

* PER G.S.

PARTICOLARI DEL TERGICRISTALLO
DETAIL DE L'ESSUIE-GLACE
WINDSHIELD WIPER COMPONENTS
EINZELTEILE DES SCHEIBENWISCHERS
PIEZAS DEL LIMPIA PARABRISAS

MARELLI

TAV. 45.08

1ª	EDIZIONE	1974	APRILE
1st	EDITION		AVRIL
1st	EDITION		APRIL
1.	AUSGABE		APRIL
1ª	EDICION		ABRIL

DATA ULTIMO AGGIORNAMENTO

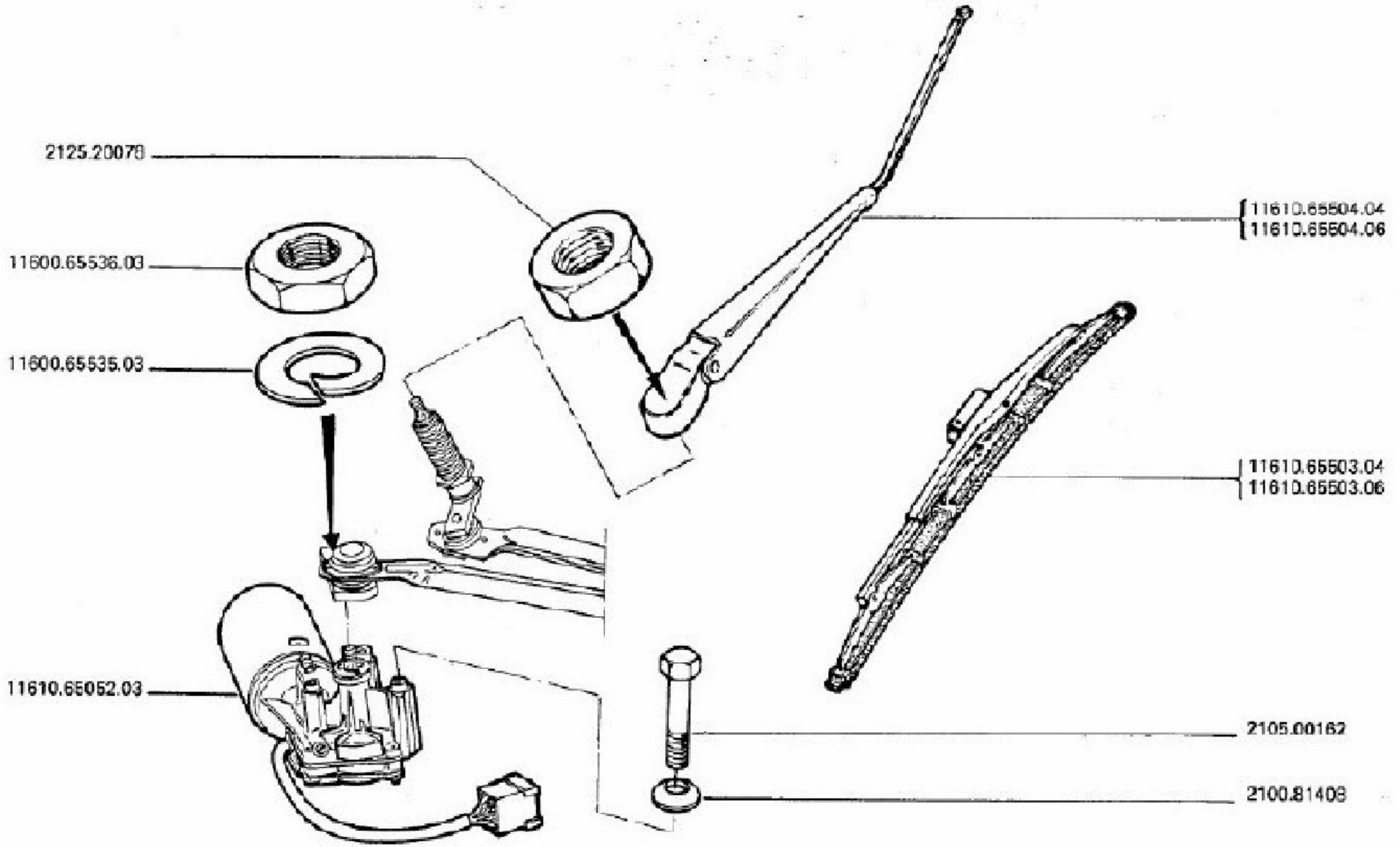

TAV. 45.00/0

PARTICOLARI DEL TERGICRISTALLO - MARELLI
DETAIL DE L ESSUIE-GLACE
WINDSHIELD WIPER COMPONENTS
EINZELTEILE DES SCHEIBENWISCHERS
PIEZAS DEL LIMPIA PARABRISAS

MODIFICA	N. ORDINAZIONE	QT.	DENOMINAZIONE	DESIGNATION	DESCRIPTION	BENENNUNG	DENOMINACIONES
	2100.01408	3	RONDELLA	RONDELLE	WASHER	SCHEIBE	ARANDELLA
	2105.00162	3	VITE	VIS	SCREW	SCHRAUBE	TORNILLO
	2125.20078	2	DADO	ECROU	NUT	MUTTER	TUERCA
	11600.65535.03	1	RONDELLA	RONDELLE	WASHER	SCHEIBE	ARANDELLA
	11600.65536.03	1	DADO	ECROU	NUT	MUTTER	TUERCA
	11610.65052.03	1	MOTORINO	MOTEUR	MOTOR	GEBLAESEMOTOR	MOTOR VENTILADOR
	11610.65503.04	2	SPAZZOLA BOSCH	RACLETTE	WIPER BLADE	WISCHERBLATT	LIMPIADOR
	11610.65503.06	2	SPAZZOLA CARELLO	RACLETTE	WIPER BLADE	WISCHERBLATT	LIMPIADOR
	11610.65504.04	2	BRACCIO BOSCH	BRAS ESSUIE-GLACE	WIPER ARM	WISCHERARM	BRAZO LIMPIAPARAB.
	11610.65504.06	2	BRACCIO CARELLO	BRAS ESSUIE-GLACE	WIPER ARM	WISCHERARM	BRAZO LIMPIAPARAB.

ACCESSORI VARI DELL'IMPIANTO ELETTRICO
ACCESSOIRES DE L'EQUIPEMENT ELECTRIQUE
MISCELLANEOUS ELECTRICAL EQUIPMENT
EINZELTEILE DER ELEKTR. AUSRUSTUNG
ACCESSORIOS DE LA INSTALACION ELECTRICA

TAV. 46.00

1a	EDIZIONE	1974	APRILE
ère	EDITION		AVRIL
st	EDITION		APRIL
.	AUSGABE		APRIL
ra	EDICION		ABRIL

10514.65086.00 MIXO
10514.65086.01 FIAMM
10514.65087.00 MIXO
10514.65087.01 FIAMM

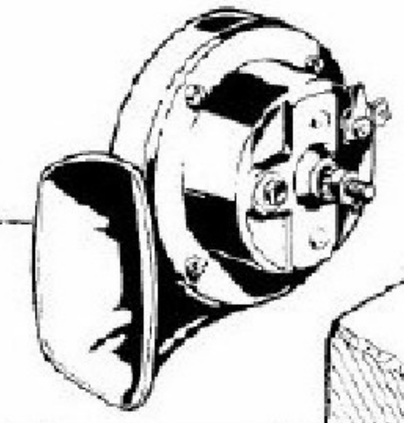

11616.65024.00 SIPEA
11616.65024.02 SEIMA
11616.65024.01 CARTIER



11008.65048.00



11610.65135.02 SIPEA
11610.65135.07 BOSCH
11610.65135.13 WEPOO

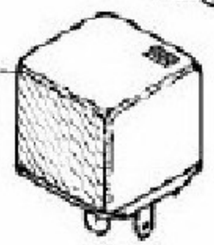

10564.65006.00 BOSCH
10564.65006.01 KIRSTEN



11610.65135.00 SIPEA
11610.65135.06 BOSCH
11610.65135.12 WEPOO

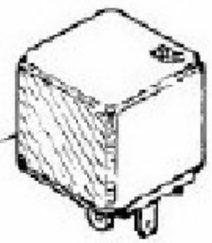

10564.65177.01



11616.65093.00 SIPEA
11616.65093.01 CARTIER
11616.65093.05 WEPOO
11616.65093.03 SEIMA



11610.65042.00



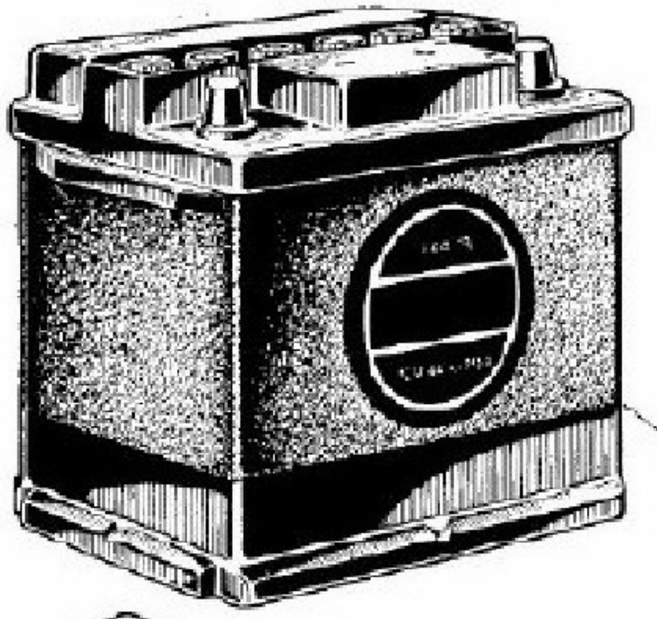

10502.61146.02

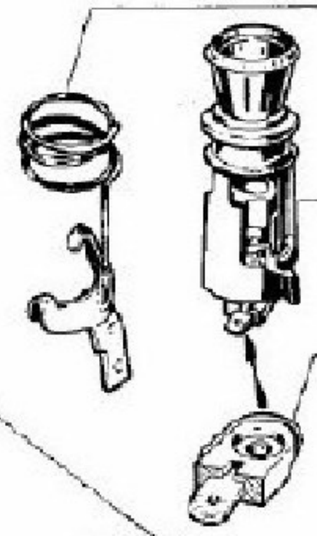

10502.65035.02

10502.65561.00

11600.65021.01
11600.65021.02
11608.65021.00
11608.65021.01
11608.65021.02
11608.65021.03
11618.65021.00
11618.65021.01

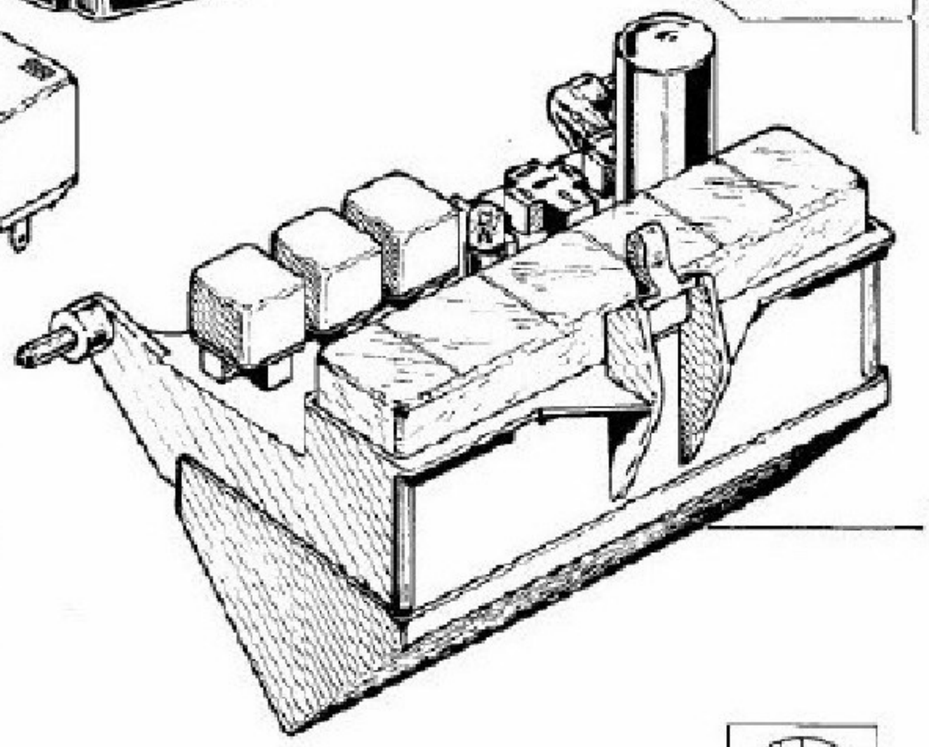

11610.65030.01

TAV. 46.00/0

ACCESSORI VARI DELL IMPIANTO ELETTRICO
ACCESSOIRES DE L EQUIPEMENT ELECTRIQUE
MISCELLANEOUS ELECTRICAL EQUIPMENT
EINZELTEILE DER ELEKTR. AUSRUSTUNG
ACCESSORIOS DE LA INSTALACION ELECTRICA

MODIFICA	N. ORDINAZIONE	QT.	DENOMINAZIONE	DESIGNATION	DESCRIPTION	BENENNUNG	DENOMINACIONES
	10502.61146.02	1	MOLLA	RESSORT	SPRING	FEDER	MUELLE
	10502.65035.02	1	ACCENDISIGARI	ALLUME-CIGARE	CIGAR LIGHTER	ZIGARRENANZUENDER	ENCENDEDOR
	10502.65561.00	1	PROTEZIONE	PROTECTEUR	PROTECTION	SCHUTZ	PROTECCION
	10514.65086.00	1	004300				
	10514.65086.01	1	AVVISATORE ACUTO	AVERTISSEUR	HORN	SIGNALHORN	AVISADOR
	10514.65087.00	1	AVVISATORE GRAVE	AVERTISSEUR	HORN	SIGNALHORN	AVISADOR
	10514.65087.01	1	AVVISATORE GRAVE	AVERTISSEUR	HORN	SIGNALHORN	AVISADOR
	10564.65006.00 *	1	INTERR.LUCI SIMULT.	INTERRUPTEUR	SWITCH	SCHALTER	INTERRUPTOR
	10564.65006.01 *	1	INTERR.LUCI SIMULT.	INTERRUPTEUR	SWITCH	SCHALTER	INTERRUPTOR
	10564.65177.01	1	INTERR.STOP	INTERRUPTEUR	SWITCH	SCHALTER	INTERRUPTOR
	11600.65021.01	1	BATTERIA 50-A	BATTERIE	BATTERY	BATTERIE	BATERIA
	11600.65021.02 .	1	BATTERIA 60-A	BATTERIE	BATTERY	BATTERIE	BATERIA
	11608.65021.00 .	1	BATTERIA 60-A	BATTERIE	BATTERY	BATTERIE	BATERIA
	11608.65021.01	1	BATTERIA 50-A	BATTERIE	BATTERY	BATTERIE	BATERIA
	11608.65021.02	1	BATTERIA SECCA 50-A	BATTERIE	BATTERY	BATTERIE	BATERIA
	11608.65021.03 .	1	BATTERIA SECCA 60-A	BATTERIE	BATTERY	BATTERIE	BATERIA
	11608.65048.00	1	INTERR.PER RISCALD.	INTERRUPTEUR	SWITCH	SCHALTER	INTERRUPTOR
	11610.65030.01	1	VALVOLIERA	BOITE A FUSIBLES	FUSEBOX	SICHERUNGSDOSE	PORTAVALVULAS
	11610.65042.00	1	INTERR.PER LUNOTTO	INTERRUPTEUR	SWITCH	SCHALTER	INTERRUPTOR
	11610.65135.00	1	TELER.PER AVVIS.	RELAIS ELECTROMAGN.	RELAY	RELAIS	TELERRUPTOR
	11610.65135.02	2	TELERUTTORE	RELAIS ELECTROMAGN.	RELAY	RELAIS	TELERRUPTOR

ACCESSORI VARI DELL'IMPIANTO ELETTRICO
ACCESSOIRES DE L'EQUIPEMENT ELECTRIQUE
MISCELLANEOUS ELECTRICAL EQUIPMENT
EINZELTEILE DER ELEKTR. AUSRÜSTUNG
ACCESSORIOS DE LA INSTALACION ELECTRICA

TAV. 46.00

1ª	EDIZIONE	1974	APRILE
1st	EDITION		AVRIL
1st	EDITION		APRIL
1.	AUSGABE		APRIL
1ª	EDICION		ABRIL

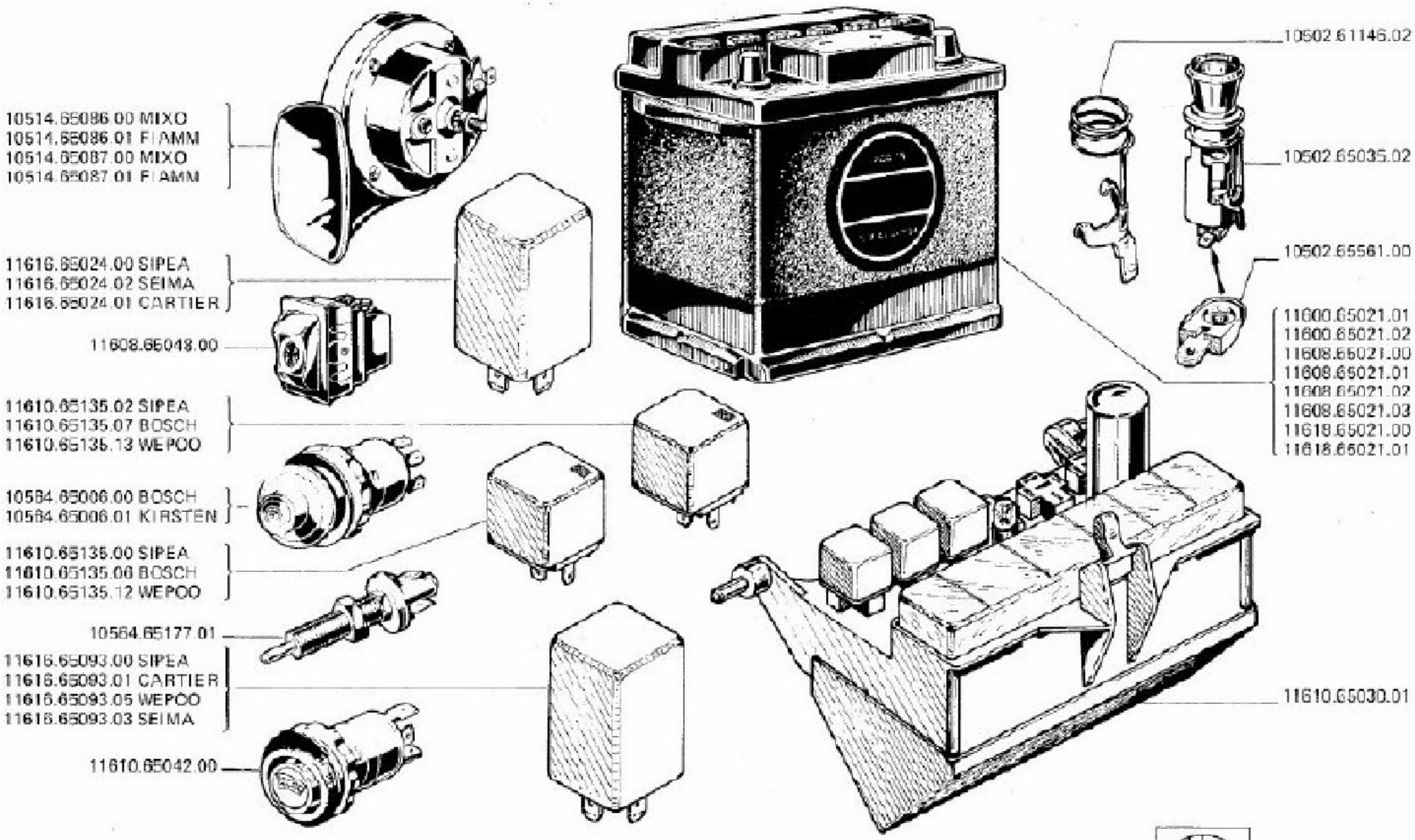

TAV. 46.00/0

ACCESSORI VARI DELL IMPIANTO ELETTRICO
ACCESSOIRES DE L EQUIPEMENT ELECTRIQUE
MISCELLANEOUS ELECTRICAL EQUIPMENT
EINZELTEILE DER ELEKTR. AUSRUSTUNG
ACCESSORIOS DE LA INSTALACION ELECTRICA

MODIFICA	N ORDINAZIONE	QT.	DENOMINAZIONE	DESIGNATION	DESCRIPTION	BENENNUNG	DENOMINACIONES
	11610.65135.06	1	TELER.PER AVVIS.	RELAIS ELECTROMAGN.	RELAY	RELAIS	TELERRUPTOR
	11610.65135.07	2	TELERUTTORE	RELAIS ELECTROMAGN.	RELAY	RELAIS	TELERRUPTOR
	11610.65135.12	1	TELER.PER AVVIS.	RELAIS ELECTROMAGN.	RELAY	RELAIS	TELERRUPTOR
	11610.65135.13	2	TELERUTTORE	RELAIS ELECTROMAGN.	RELAY	RELAIS	TELERRUPTOR
	11616.65024.00	1	INTERMITTENTE	ALTERNATIF	ALTERNATIVE	ABWECHSELND	ALTERNATIVO
	11616.65024.01	1	INTERMITTENTE	ALTERNATIF	ALTERNATIVE	ABWECHSELND	ALTERNATIVO
	11616.65024.02	1	INTERMITTENTE	ALTERNATIF	ALTERNATIVE	ABWECHSELND	ALTERNATIVO
	11616.65093.00	1	DISP.LUCI SIMULT.	RELAIS ELECTROMAGN.	RELAY	RELAIS	TELERRUPTOR
	11616.65093.01	1	DISP.LUCI SIMULT.	RELAIS ELECTROMAGN.	RELAY	RELAIS	TELERRUPTOR
	11616.65093.03	1	DISP.LUCI SIMULT.	RELAIS ELECTROMAGN.	RELAY	RELAIS	TELERRUPTOR
	11616.65093.05	1	DISP.LUCI SIMULT.	RELAIS ELECTROMAGN.	RELAY	RELAIS	TELERRUPTOR
	11618.65021.00	1	BATTERIA 60-A	BATTERIE	BATTERY	BATTERIE	BATERIA
	11618.65021.01	1	BATTERIA 50-A	BATTERIE	BATTERY	BATTERIE	BATERIA

* D-J-N-S-
\- PER ESPORTAZIONE — POUR EXPORTATION — FOR EXPORT — FUR EXPORT — PARA EXPORTACION

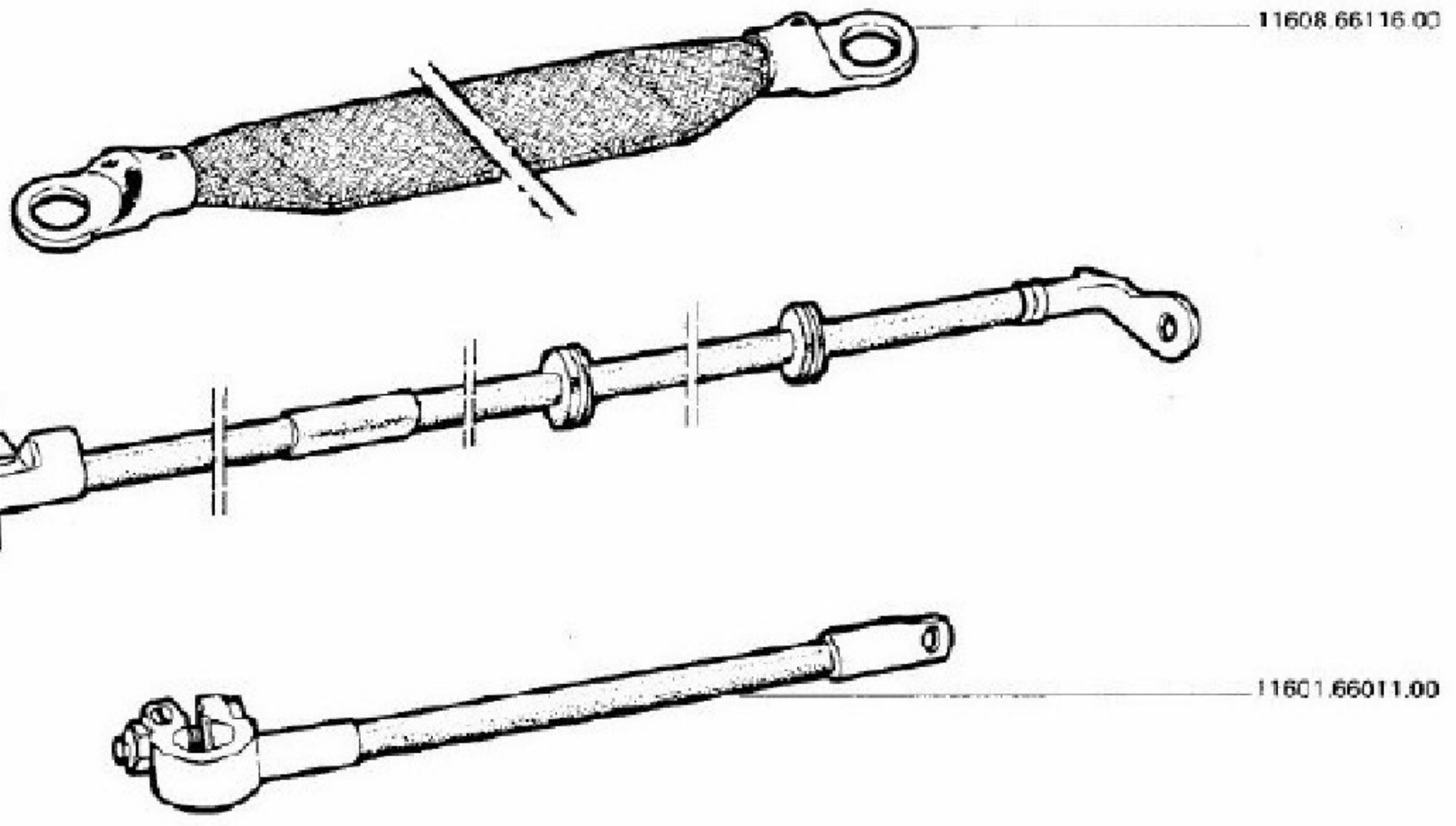
11608.66116.00
11601.66010.00
11601.66011.00

TAV. 46.10/0

CAVI PER IMPIANTO ELETTRICO
CABLES ELECTRIQUES
ELECTRICAL CABLES
ELEKTRISCHE LEITUNGEN
CABLES ELECTRICOS

MODIFICA	N. ORDINAZIONE	QT.	DENOMINAZIONE	DÉSIGNATION	DESCRIPTION	BENENNUNG	DENOMINACIONES
	11601.66010.00	1	CAVO AL MOTORINO AVV	FIL ALLUMAGE	IGNITION CABLE	ZUENDKABEL	CABLE ENCENDIDO
	11601.66011.00	1	CAVO MASSA BATTERIA	CABLE DE MASSE	EARTH CABLE	MASSEKABEL	CABLE DE MASA
	11608.66116.00	1	CAVO MASSA MOTORE	CABLE DE MASSE	EARTH CABLE	MASSEKABEL	CABLE DE MASA

FISSAGGI VARI PER IMPIANTO ELETTRICO
FIXATION DU SYSTEME ELECTRIQUE
ELECTRICAL SYSTEM FASTENERS
BEFESTIGUNGSTEILE DER ELEKTRISCHEN ANGLAGE
FIJACION CABLES ELECTRICOS

TAV. 46.20

1ª	EDIZIONE	1974	APRILE
1ère	EDITION		AVRIL
1st	EDITION		APRIL
1ª	AUSGABE		APRIL
1ère	EDICION		ABRIL

DATA ULTIMO AGGIORNAMENTO

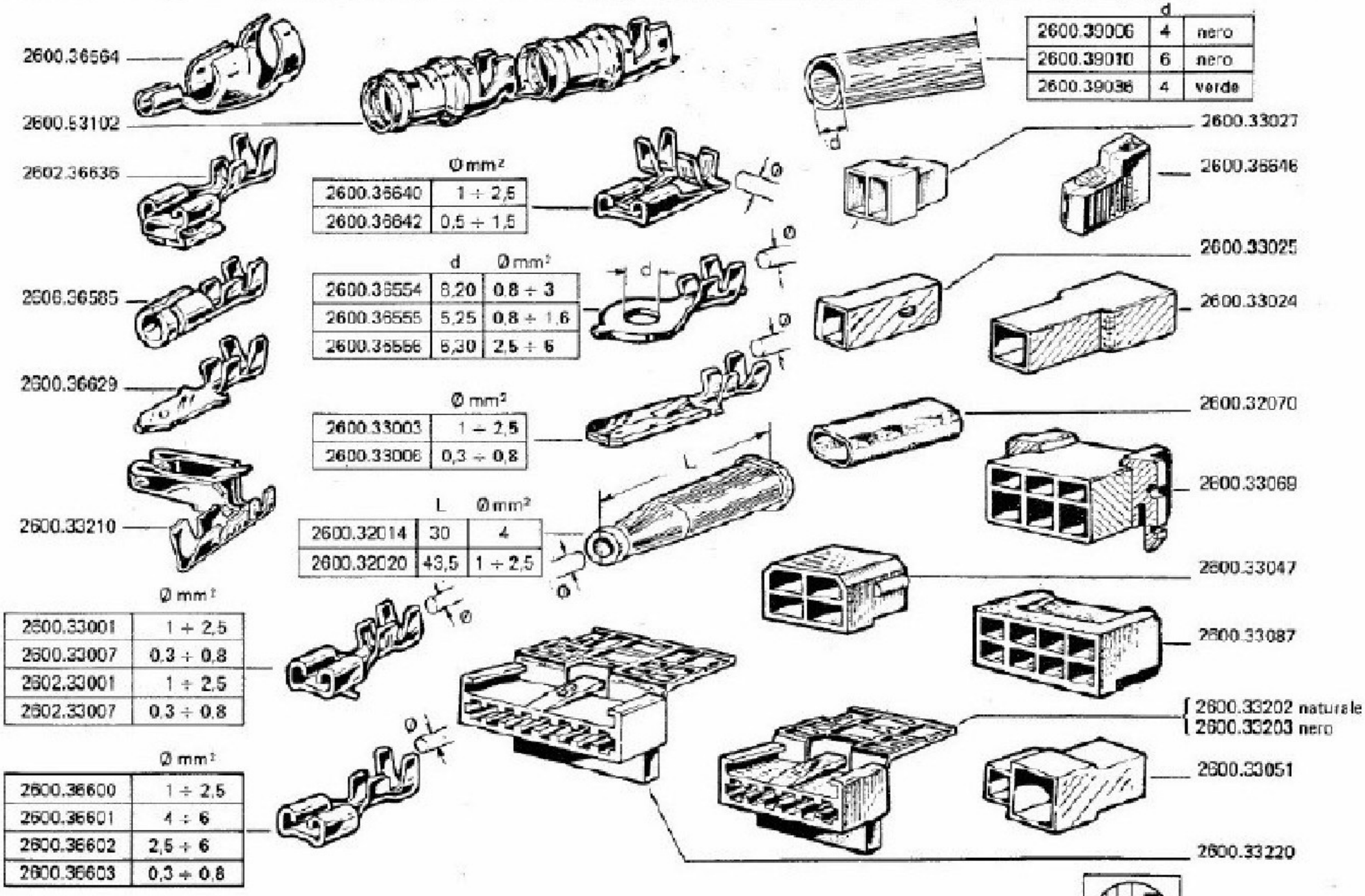

	d	
2600.39006	4	nero
2600.39010	6	nero
2600.39036	4	verde

	Ø mm²
2600.36640	1 ÷ 2,5
2600.36642	0,5 ÷ 1,5

	d	Ø mm²
2600.36554	8,20	0,8 ÷ 3
2600.36555	5,25	0,8 ÷ 1,6
2600.36556	6,30	2,5 ÷ 6

	Ø mm²
2600.33003	1 ÷ 2,5
2600.33006	0,3 ÷ 0,8

	L	Ø mm²
2600.32014	30	4
2600.32020	43,5	1 ÷ 2,5

	Ø mm²
2600.33001	1 ÷ 2,5
2600.33007	0,3 ÷ 0,8
2602.33001	1 ÷ 2,5
2602.33007	0,3 ÷ 0,8

	Ø mm²
2600.36600	1 ÷ 2,5
2600.36601	4 ÷ 6
2600.36602	2,5 ÷ 6
2600.36603	0,3 ÷ 0,8

CAVI PER IMPIANTO ELETTRICO (forniti a metri)

TAV. 46.30

Câbles électriques (livrés par mètres)

Elektrische Leitungen (vom laufenden Meter erhältlich)

Electrical Cables (supplied by meters)

Cables eléctricos que se suministran por metros

COLORE ISOLAMENTO	ISOLANT	INSULATION COLOR	ISOLIERUNG	COLORES DEL FORRO	Sezione in mm² / Section en mm² / Querschnitt in mm² / Gauge in mm² / Secciones en mm²						
					0,5	1	1,5	2,5	4	6	10
					n. ordinaz.						
Bianco	Blanc	White	Weiss	Blanco	2600.22000	2600.22020					
Nero	Noir	Black	Schwarz	Negro	2600.22001	2600.22021		2600.22071			
Azzurro	Bleu	Blue	Blau	Azul	2600.22002	2600.22023					
Marrone	Marron	Brown	Braun	Pardo	2600.22003	2600.22024					
Giallo	Jaune	Yellow	Gelb	Amarillo	2600.22004	2600.22025					
Rosso	Rouge	Red	Rot	Rojo	2600.10722*	2600.22026		2600.22076	2600.22096 2600.10780*		
Verde	Vert	Green	Grün	Verde	2600.22006	2600.22027					
Grigio	Gris	Gray	Grau	Gris	2600.10723*	2600.22028					
Rosa	Rose	Pink	Rosa	Rosa	2600.22008						
Viola	Violet	Violet	Violett	Viola	2600.22019	2600.22046		2600.22086			
Arancione	Orangé	Orange	Orange	Anaranjado	2600.22018						
Bianco con rigature nera	Blanc avec rayure noire	White with black tracer	Weisschwarz	Blanco y negro	2600.22011						
Azzurro con rigatura nera	Bleu avec rayure noire	Blue with black tracer	Blauschwarz	Azul y negro	2600.22012	2600.22031					
Giallo con rigatura nera	Jaune avec rayure noire	Yellow with black tracer	Gelbschwarz	Amarillo y negro	2600.22013	2600.22032					
Verde con rigatura nera	Vert avec rayure noire	Green with black tracer	Grünschwarz	Verde y negro	2600.22014	2600.22033					
Grigio con rigatura nera	Gris avec rayure noire	Gray with black tracer	Grauschwarz	Gris y negro	2600.22010	2600.22040					
Rosso con rigatura nera	Rouge avec rayure noire	Red with black tracer	Rotschwarz	Rojo y negro	2600.22015						
Arancione con rigatura nera	Orangé avec rayure noire	Orange with black tracer	Orangeschwarz	Anaranjado y negro	2600.22240						
Azzurro con rigatura bianca	Bleu avec rayure blanche	Blue with white tracer	Blauweiss	Azul y blanco		2600.22037					
Rosso con rigatura grigia	Rouge avec rayure grise	Red with gray tracer	Rotgrau	Rojo y gris	2600.10732*						

* Cavi in gomma G6 * Câbles caoutchouc G6 * Rubber cables G6 * Gummierte Kabel G6 * Cables de goma G6

TUBI IN ROTOLI (forniti a cm.)
TUBE EN ROULEAU (vente au cm.)
REELED HOSES (supplied by cm.)
ROHR AUFGEROLLT (Lieferung cm.)
TUBOS EN ENROLLADOS (vendidos por cm.)

TAV. 49.00

1ª EDIZIONE APRILE 1974
1re EDITION AVRIL
1st EDITION APRIL
1ª EDIZIONE APRILE
1ª EDICION ABRIL

	cm.	N. Ordinazione - N. de commande - Order No. - Bestell-Nr. - N. de pedido
2300.52003	42	32352.00460.74
2300.51940	90	
2300.51958	139	32352.00550.62
2300.51966	150	
10514.01672.00	32	33411.60701.09
2300.52109	16	
2300.52111	15	
2300.52123	27	33415.00452.14
2300.52129	33	
2300.52131	35	
2300.52133	37	

	cm.	N. Ordinazione - N. de commande - Order No. - Bestell-Nr. - N. de pedido



CARROSSERIE
COACHWORK
AUFBAU
CARROCERIA

CARROZZERIA

INDICE DELLE TAVOLE
REPERTOIRE DES PLANCHES
INDEX OF TABLES
TAFELVERZEICHNIS
INDICE DE LAMINAS

DENOMINAZIONE	DESIGNATION	DESCRIPTION	BENENNUNG	DENOMINACIONES	TAV	PAG
SCOCCA ABBIGLIATA E GREZZA	CAISSE HABILLEE ET BRUTE	BODY, TRIMMED AND UNCELLULOSED	SELBSTTRAGENDE KAROSSERIE, AUSGESTATTET ODER ROHBAU	CARROCERIA VESTIDA Y EN BRUTO	61.00/0	351
PARTE ANTERIORE TELAIO	CAISSON AVANT	BODY FRONT SECTION	VORBAU	PARTE ANTERIOR DEL BASTIDOR	61.10/0	353
PARTICOLARI PARTE ANTERIORE TELAIO	DETAIL DU CAISSON AVANT	BODY FRONT SECTION DETAILS	VORBAU-EINZELTEILE	PARTICULARES PARTE ANTERIOR BASTIDOR	61.11/0	355
PARTE CENTRALE TELAIO	SOUBASSEMENT ET PLANCHER	BODY CENTER SECTION	FAHRGESTELLBODEN	PARTE CENTRAL DEL BASTIDOR	61.20/0	359
PARTICOLARI PARTE CENTRALE TELAIO	DETAIL DU SOUBASSEMENT ET PLANCHER	BODY CENTER SECTION DETAILS	FAHRGESTELLBODEN EINZELTEILE	PARTICULARES PARTE CENTRAL BASTIDOR	61.21/0	361
PARTE POSTERIORE TELAIO	CAISSON ARRIERE	BODY REAR SECTION	HECK	PARTE POSTERIOR BASTIDOR	61.30/0	363
PARTICOLARI PARTE POSTERIORE TELAIO	DETAIL DU CAISSON ARRIERE	BODY REAR SECTION DETAILS	HECK-EINZELTEILE	PARTICULARES PARTE POSTERIOR BASTIDOR	61.31/0	365
TETTO-STRUTTURA PARABREZZA-FINESTRINO POSTERIORE	PAVILLON - AUVENT ET LUNETTE ARRIERE	ROOF-WINDSHIELD AND REAR WINDOW FRAME	DACH-WINDSCHUTZ-UND HECKFENSTER-ROHBAU	TECHO-MARCO PARABRISAS Y VENTANA POSTERIOR	61.40/0	367
PARTICOLARI STRUTTURA PARABREZZA	DETAIL DE L AUVENT	WINDSHIELD FRAME DETAILS	WINDSCHUTZ-ROHBAU EINZELTEILE	PARTICULARES MARCO PARABRISAS	61.41/0	369
STRUTTURA FIANCATE	COTES DE CAISSE	SIDE FRAME	SEITENTEILE-ROHBAU	ESTRUCTURA FLANCOS	61.50/0	371
PARTICOLARI DELLA FIANCATA	DETAIL DES COTES DE CAISSE	SIDE FRAME DETAILS	SEITENTEILE EINZELTEILE	DETALLE FLANCOS	61.51/0	373
PANNELLERIA ANTERIORE	CAISSON AVANT TOLERIE D HABILLAGE	FRONT PANELS	VORDERE BLECHTEILE	PANELERIA ANTERIOR	61.60/0	375

DENOMINAZIONE	DESIGNATION	DESCRIPTION	BENENNUNG	DENOMINACIONES	TAV	PAG
PANNELLERIA POSTERIORE	CAISSON ARRIERE TOLERIE D HABILLAGE	REAR PANELS	HINTERE BLECHTEILE	PANELERIA POSTERIOR	61.70/0	377
QUADRO PORTA APPARECCHI PER VETTURE G.S.	PLANCHE DE BORD VOIT. D. A G.	INSTRUMENT PANEL L.H.D. CARS	INSTRUMENTENBRETT FUR LL	TABLERO DE ISTRUMENTOS PARA AUTOMOV.C.IZQ.	62.01/0	379
QUADRO PORTA APPARECCHI PER VETTURE G.D.	PLANCHE DE BORD VOIT. D. A D.	INSTRUMENT PANEL FOR R.H.D. CARS	INSTRUMENTENBRETT FUR RL	TABLERO DE ISTRUMENTOS PARA AUTOMOV.G.D.	62.10/0	381
APPARECCHI - JAEGER	APPAREILLAGE DE BORD	INSTRUMENTS	INSTRUMENTE	INSTRUMENTOS	62.20/0	383
MOBILETTO SUL TEGOLO	CONSOLE DE TABLEAU DE BORD	CONSOLE	KONSOLE	CONSOLA SOBRE EL TUNEL	62.30/0	385
PARAURTI ANTERIORE	PARE-CHOCS AVANT	FRONT BUMPER	VORDER STOSSFAENGER	PARACHOQUES ANTERIOR	63.00/0	387
PARAURTI POSTERIORE	PARE-CHOCS ARRIERE	REAR BUMPER	HINTERE STOSSFAENGER	PARACHOQUES POSTERIOR	63.10/0	389
FREGI E PROFILATI ESTERNI	ENJOLIVEURS ET PROFILS EXTERIEURS	EXTERNAL MOULDINGS AND ORNAMENTS	AEUSSERE ZIERBESCHLAGE	ADORNOS Y PERFILES EXTERNOS	63.20/0	391
FREGI E PROFILATI ESTERNI	ENJOLIVEURS ET PROFILS EXTERIEURS	EXTERNAL MOULDINGS AND ORNAMENTS	AEUSSERE ZIERBESCHLAGE	ADORNOS Y PERFILES EXTERNOS	63.20/E	395
MASCHERA RADIATORE E PRESA ARIA	CALANDRE DE RADIATEUR ET PRISES D AIR	RADIATOR GRILLE AND AIR INTAKES	KUHLERSCHUTZGITTER UND LUFTEINLAESSE	CALANDRA RADIATOR Y TOMA AIRE	63.30/0	397
PARTICOLARI INTERNI DELLA CARROZZERIA	ACCESSOIRES INTERIEURS DE CARROSSERIE	INTERNAL DETAILS	INNENEINRICHTUNG	PARTICULARES INTERIORES CARROCERIA	64.00/0	399

DENOMINAZIONE	DESIGNATION	DESCRIPTION	BENENNUNG	DENOMINACIONES	TAV	PAG
PARTICOLARI INTERNI DELLA CARROZZERIA	ACCESSOIRES INTERIEURS DE CARROSSERIE	INTERNAL DETAILS	INNENEINRICHTUNG	PARTICULARES INTERIORES CARROCERIA	64.00/1	401
PARTICOLARI INTERNI DELLA CARROZZERIA	ACCESSOIRES INTERIEURS DE CARROSSERIE	INTERNAL DETAILS	INNENEINRICHTUNG	PARTICULARES INTERIORES CARROCERIA	64.00/2	403
CRISTALLI PORTE PARABREZZA E FINESTRINO POSTERIORE	VITRES DE PORTES -PARE-BRISE ET LUNETTE ARRIERE	WINDSHIELD, SIDE AND REAR WINDOWS	VERGLASUNG	CRISTALES PUERTAS PARABRISAS Y VENTANILLA POSTERIOR	65.00/0	407
LAVAPARABREZZA	LAVE-GLACE	WINDSHIELD WASHER	SCHEIBENWASCHANLAGE	LAVAPARABRISAS	65.10/0	409
LAVAPARABREZZA A COMANDO ELETTRICO	LAVE-GLACE ELECTRIQUE	POWER WINDSHIELD WASHER	ELEKTR SCHEIBENWASCHANLAGE	LAVAPARABRISAS ELECTRICO	65.20/0	411
COMMUTATORE-BLOCCHETTI E SERRATURE	CONTACTEUR D ALLUMAGE DEMARRAGE-SERRURES ET CLES	IGNITION SWITCH-LOCKS AND KEYS	ZUNDANLASSCHLOSS - TUERSCHLOESSER UND SCHLUESSEL	CONMUTADOR -CERRADURA Y LLAVES	66.00/0	413
COFANO MOTORE	CAPOT DE MOTEUR	ENGINE HOOD	MOTORHAUBE	CAPO	66.10/0	415
PARTICOLARI DEL COFANO MOTORE	DETAIL DU CAPOT DE MOTEUR	ENGINE HOOD DETAILS	MOTORHAUBEN-EINZELTEIL	PARTICULARES DEL CAPO	66.11/0	417
PARTICOLARI DEL COFANO MOTORE	DETAIL DU CAPOT DE MOTEUR	ENGINE HOOD DETAILS	MOTORHAUBEN-EINZELTEIL	PARTICULARES DEL CAPO	66.11/1	419
CONTENITORI E GOMMINI DI TENUTA SUL CRUSCOTTO PER VETT.G.S	TAMPONS ET BOUCHONS SUR LE TABLIER VOIT. DI .A G.	RETAINERS AND GROMMETS ON DASHBOARD FOR L.H.D. CARS	HALTERUNGEN U. GUMMIDICHTUNGEN AN STIRNWAND F.LL	ENVASES Y GOMA DE HERMETICIDAD EN EL TABLERO PARA AUT.G.IZQ	66.20/0	421
COFANO BAGAGLIERA	COFFRE A BAGAGES	TRUNK LID	KOFFERRAUMDECKEL	CAPO DEL PORTAEQUIPAJE	66.30/0	423

DENOMINAZIONE	DESIGNATION	DESCRIPTION	BENENNUNG	DENOMINACIONES	TAV	PAG
PARTICOLARI COFANO BAGAGLIERA	DETAIL DU COFFRE A BAGAGES	TRUNK LID DETAILS	KOFFERRAUMDECKEL EINZELTEILE	PARTICULARES DEL CAPO PORTAEQUIPAJES	66.31/0	425
PORTE ANTERIORI	PORTES AVANT	FRONT DOORS	FAHRERTUEREN	PUERTAS ANTERIORES	67.00/0	427
PARTICOLARI DELLE PORTE ANTERIORI	DETAIL DES PORTES AVANT	FRONT DOOR DETAILS	FAHRERTUEREN EINZELTEILE	PARTICULARES DE LAS PUERTAS ANTERIORES	67.01/0	429
SERRATURE ALZACRISTAL. E PROFILATI PORTE ANTERIORI	SERRURES-LEVE-GLACE ET PROFILS DE PORTES AVANT	FRONT DOOR LOCKS WINDOW REGULATORS AND MOULDINGS	SCHLOESSER- FENSTERHEBER U. ZIERLEISTEN FAHRERTUER	CERRADURAS-ELEVADORES CRISTALES Y PERFILES PUERTAS ANTERIORES	67.02/0	431
SERRATURE ALZACRISTAL. E PROFILATI PORTE ANTERIORI	SERRURES-LEVE-GLACE ET PROFILS DE PORTES AVANT	FRONT DOOR LOCKS WINDOW REGULATORS AND MOULDINGS	SCHLOESSER- FENSTERHEBER U. ZIERLEISTEN FAHRERTUER	CERRADURAS-ELEVADORES CRISTALES Y PERFILES PUERTAS ANTERIORES	67.02/1	433
PANNELLI INTERNI E CORNICI PORTE ANTERIORI	PANNEAUX INTERIEURS ET PROFILS ENJOLIVEURS DE PORTES AVANT	FRONT DOOR TRIM PANELS AND MOULDINGS	BELAEGE UND RAHMEN DER FAHRERTUEREN	PANELES INTERIORES Y MARCOS PUERTAS ANTERIORES	67.03/0	437
PARTICOLARI VANO PORTE	DETAIL DE L OUVERTURE DE PORTE	DOOR OPENING DETAILS	EINZELTEILE DES TURRAHMENS	DETALLE DEL MARCO PUERTAS	67.30/0	439
SEDILI ANTERIORI	SIEGES AVANT	FRONT SEATS	VORDERSITZE	ASIENTOS ANTERIORES	68.00/0	441
SEDILI ANTERIORI	SIEGES AVANT	FRONT SEATS	VORDERSITZE	ASIENTOS ANTERIORES	68.00/1	443
TAPPETI	TAPIS	CARPENTING	TEPPICHE	ALFOMBRAS	69.00/0	445
RIVESTIMENTI ISOLANTI	REVETEMENTS ISOLANTS	INSULATING COVERING	ISOLIERUNG	RIVESTIMIENTOS AISLANTES	69.10/0	447

DENOMINAZIONE	DESIGNATION	DESCRIPTION	BENENNUNG	DENOMINACIONES	TAV	PAG
TAPPETI DELLA BAGAGLIERA	TAPIS DE COFFRE A BAGAGES	TRUNK MATS	KOFFERRAUMBELAG	ALFOMBRAS DEL PORTAEQUIPAJES	69.20/0	449
TAPPEZZERIE	SELLERIE	UPHOLSTERY	INNENVERKLEIDUNGEN	TAPICERIAS	69.30/0	451
IMPIANTO DI RISCALDAMENTO	INSTALLATION DE CHAUFFAGE	HEATING SYSTEM	HEIZUNG	SISTEMA DE CALEFACCION	81.00/0	457
RISCALDATORE	APPAREIL DE CHAUFFAGE	HEATER	HEIZGERAET	CALENTADOR	81.10/0	459
IMPIANTO DI AREAZIONE	SYSTEME D AERATION	VENTILATION SYSTEM	BELUEFTUNGS ANLAGE	EQUIPO DE VENTILACION	82.10/0	461
DOTAZIONE ATTREZZI	OUTILLAGE LOT DE BORD	TOOL KIT	WERKZEUG	JUEGO DE HERRAMIENTAS	91.00/0	463

Scocca Alfa GT

SCOCCA ABBIGLIATA E GREZZA
CAISSE HABILLEE ET BRUTE
BODY, TRIMMED AND UNCELLULOSED
SELBSTTRAGENDE KAROSSERIE, AUSGESTATTET ODER ROHBAU
CARROCERIA VESTIDA Y EN BRUTO

TAV. 61.00

1ª EDIZIONE APRILE 1974
1ère EDITION AVRIL
1st EDITION APRIL
1. AUSGABE APRIL
1ª EDICION ABRIL

11610.49000.00 g. s.
11611.49000.00 g. d.

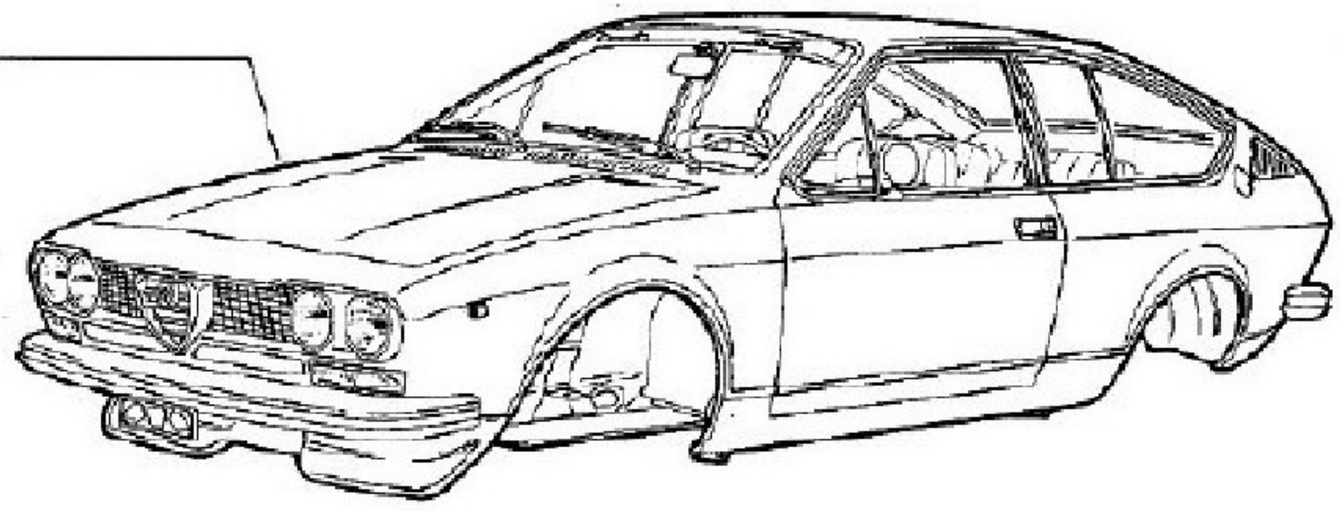

11610.49200.00 g. s.
11611.49200.00 g. d.

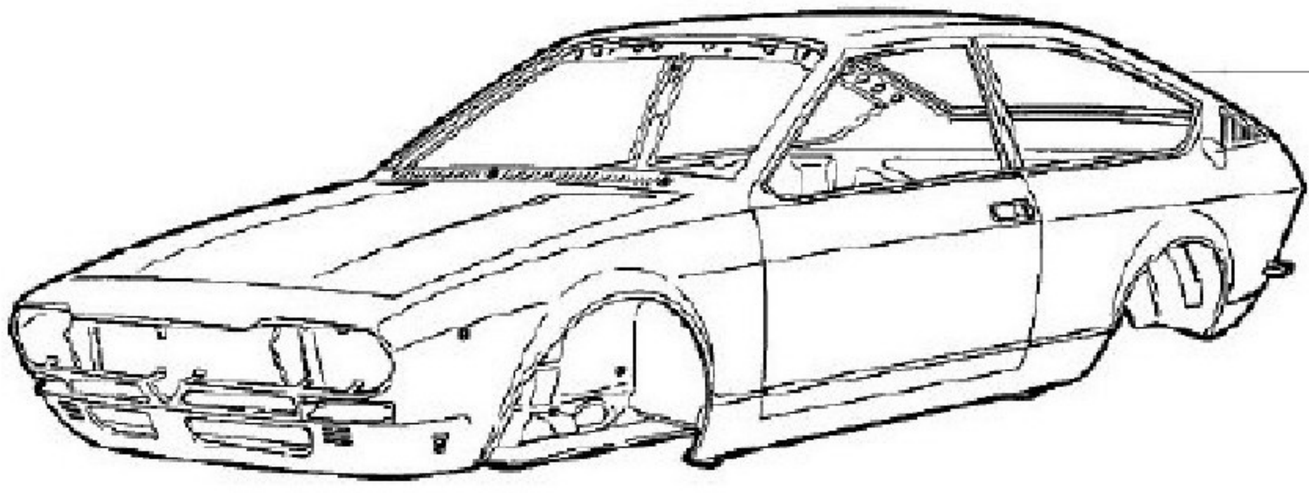

TAV. 61.00/0

SCOCCA ABBIGLIATA E GREZZA
CAISSE HABILLEE ET BRUTE
BODY, TRIMMED AND UNCELLULOSED
SELBSTTRAGENDE KAROSSERIE, AUSGESTATTET ODER ROHBAU
CARROCERIA VESTIDA Y EN BRUTO

MODIFICA	N. ORDINAZIONE	QT.	DENOMINAZIONE	DESIGNATION	DESCRIPTION	BENENNUNG	DENOMINACIONES
	11610.49000.00	1	SCOCCA ABBIGLIATA GS	COQUE PEINTE	FINISHED BODY	AUFBAU LACKIERT	CARROCERIA PINTADA
	11610.49200.00	1	SCOCCA GREZZA GS	COQUE BRUTE	UNTRIMMED BODY	ROHAUFBAU	CARROCERIA BRUTA
	11611.49000.00	1	SCOCCA ABBIGLIATA GD	COQUE PEINTE	FINISHED BODY	AUFBAU LACKIERT	CARROCERIA PINTADA
	11611.49200.00	1	SCOCCA GREZZA GD	COQUE BRUTE	UNTRIMMED BODY	ROHAUFBAU	CARROCERIA BRUTA

PARTE ANTERIORE TELAIO
CAISSON AVANT
BODY FRONT SECTION
VORBAU
PARTE ANTERIOR DEL BASTIDOR

TAV. 61.10

1ª	EDIZIONE	1974	APRILE
1ère	EDITION		AVRIL
1st	EDITION		APRIL
-	AUSGABE		APRIL
1ma	EDICION		ABRIL

DATA ELENCO AGGIORNAMENTO

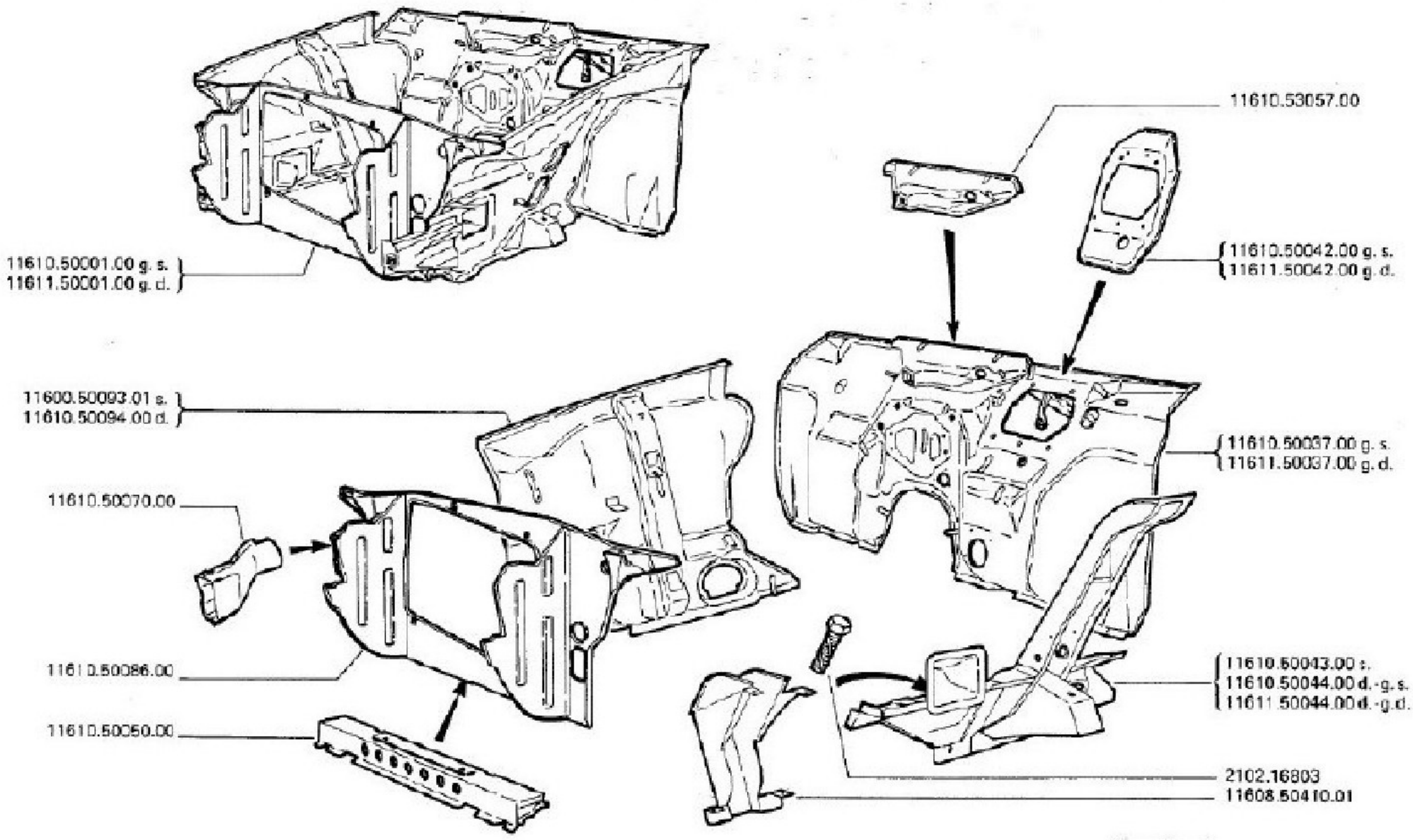

N. 6086

Alfetta GT

TAV. 6L.10/0

PARTE ANTERIORE TELAIO
CAISSON AVANT
BODY FRONT SECTION
VORBAU
PARTE ANTERIOR DEL BASTIDOR

MODIFICA	N. ORDINAZIONE	QT.	DENOMINAZIONE	DESIGNATION	DESCRIPTION	BENENNUNG	DENOMINACIONES
	2102.16863	3	VITE	VIS	SCREW	SCHRAUBE	TORNILLO
	11600.50093.01	1	LAMIERA INT.S.	TOLE	SHEET METAL	BLECH	CHAPA
	11608.50410.01	1	PROTEZIONE	PROTECTEUR	PROTECTION	SCHUTZ	PROTECCION
	11610.50001.00	1	PARTE ANT.GS	SOUBASSEMENT	FRONT SECTION	VORDERWAND	PARTE ANTERIOR
	11610.50037.00	1	CRUSCOTTO GS	TABLIER	FACIA BOARD	STIRNWAND	TABLERO
	11610.50042.00	1	RINFORZO GS	RENFORT	REINFORCEMENT	VERSTAERKUNG	REFUERZO
	11610.50043.00	1	FIANCHETTO COMPL.S.	MEMBRURE LATERALE	LOWER WING	SEITENTEIL	CHAPA LATERAL CAPO
	11610.50044.00	1	FIANCHETTO COMPL.DGS	MEMBRURE LATERALE	LOWER WING	SEITENTEIL	CHAPA LATERAL CAPO
	11610.50050.00	1	SEMITRAVERSA	DEMI-TRAVERSE	HALF CROSS MEMBER	HALBQUERTRAEGER	SEMITRAVESANO
	11610.50070.00	1	PRESA ARIA	PRISE D AIR	AIR INTAKE	LUFTEINLASS	TOMA DE AIRE
	11610.50086.00	1	DIAFRAMMA COMPL.	DIAPHRAGME	DIAPHRAGM	MEMBRAN	DIAFRAGMA
	11610.50094.00	1	LAMIERA INT.D.	TOLE	SHEET METAL	BLECH	CHAPA
	11610.53057.00	1	PARTE SUP.	PANNEAU INFERIEUR	BOTTOM PANEL	UNTERTEIL	PARTE INFERIOR
	11611.50001.00	1	PARTE ANT.GD	SOUBASSEMENT	FRONT SECTION	VORDERWAND	PARTE ANTERIOR
	11611.50037.00	1	CRUSCOTTO GD	TABLIER	FACIA BOARD	STIRNWAND	TABLERO
	11611.50042.00	1	RINFORZO GD	RENFORT	REINFORCEMENT	VERSTAERKUNG	REFUERZO

PARTICOLARI PARTE ANTERIORE TELAIO
DETAIL DU CAISSON AVANT
BODY FRONT SECTION DETAILS
VORBAU-EINZELTEILE
PARTICULARES PARTE ANTERIOR BASTIDOR

TAV. 61.11

1ª	EDIZIONE	APRILE	1974	DATA DELLE AGGIORNAMENTO
1ère	EDITION	AVRIL		
1ª	EDITION	APRIL		
1.	AUSGABE	APRIL		
1ste	EDICION	ABRIL		

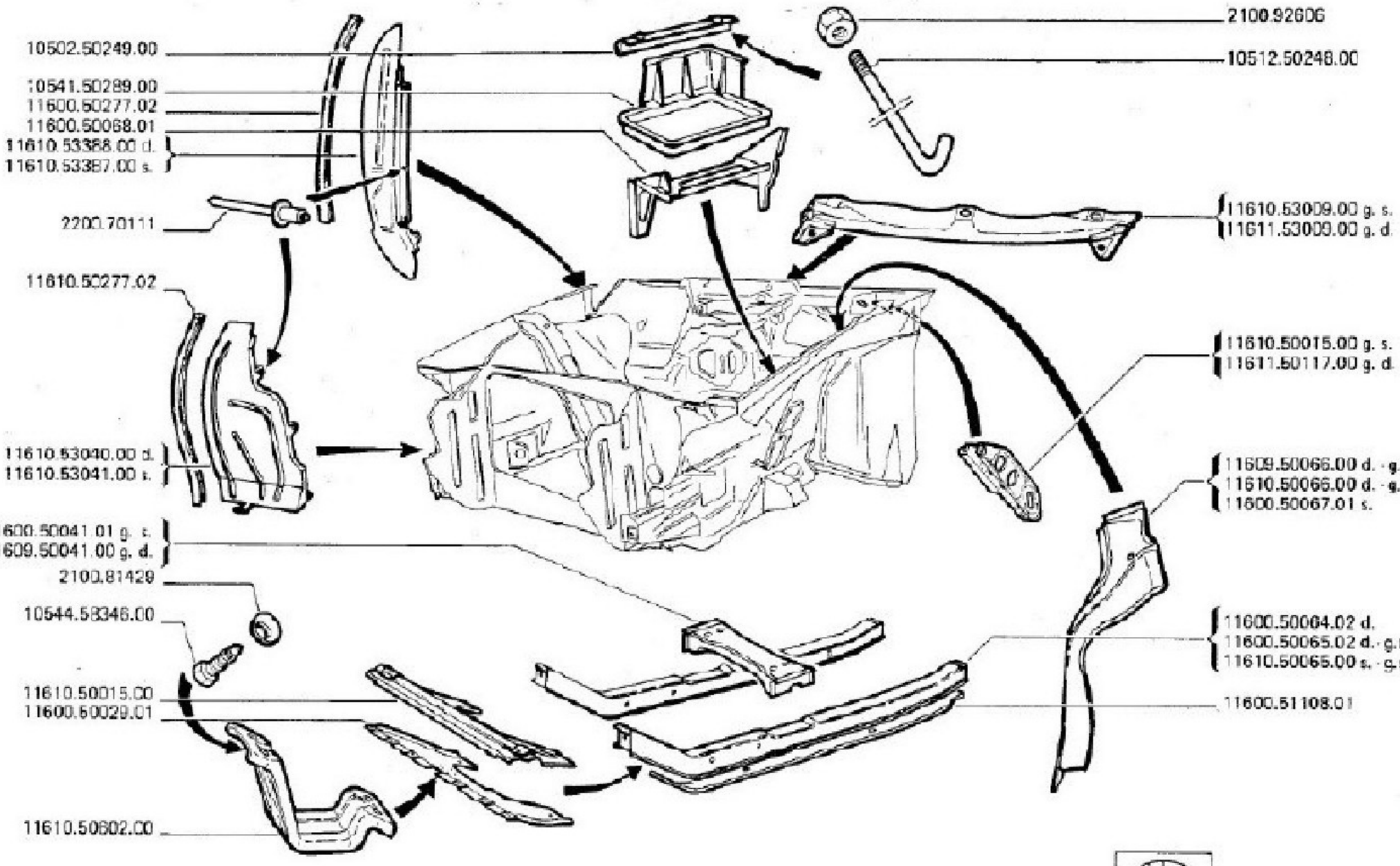

TAV. 61.11/0

PARTICOLARI PARTE ANTERIORE TELAIO
DETAIL DU CAISSON AVANT
BODY FRONT SECTION DETAILS
VORBAU-EINZELTEILE
PARTICULARES PARTE ANTERIOR BASTIDOR

MODIFICA	N. ORDINAZIONE	QT.	DENOMINAZIONE	DESIGNATION	DESCRIPTION	BENENNUNG	DENOMINACIONES
	2100.81429	4	RONDELLA	RONDELLE	WASHER	SCHEIBE	ARANDELLA
	2100.92606	2	DADO	ECROU	NUT	MUTTER	TUERCA
	2200.70111	28	RIVETTO	RIVET	RIVET	NIET	RIVETE
	10502.50249.00	1	ANGOLARE	ELEMENT DE FIXATION	ANGLE	WINKELSTUECK	ANGULAR
	10512.50248.00	2	TIRANTE	BIELLETTE	ROD	ZUGSTANGE	TIRANTE
	10541.50289.00	1	CONTENITORE	SUPPORT	RETAINER	BEHAELTER	ENVASE
	10544.58346.00	4	VITE	VIS	SCREW	SCHRAUBE	TORNILLO
	11600.50029.01	1	GREMBIALE	PANNEAU	PANEL	WINDSCHUTZHAUBE	FALDON
	11600.50041.01	1	TRAVERSA GS	TRAVERSE	CROSS MEMBER	QUERTRAEGER	TRAVESANO
	11600.50051.01	1	COLLEGAMENTO	LIAISON TRAVERSE	REINFORCEMENT	ANSCHLUSS	CONEXION
	11600.50064.02	1	LONGHERINA CENTR.D.	LONGERON	SIDE RAIL	SEITENTRAEGER	LARGUERO PEQUENO
	11600.50065.02	1	LONGHER.CENTR.D.GD	LONGERON	SIDE RAIL	SEITENTRAEGER	LARGUERO PEQUENO
	11600.50067.01	1	RINFORZO S.	RENFORT	REINFORCEMENT	VERSTAERKUNG	REFUERZO
	11600.50068.01	1	SUPPORTO BATTERIA	SUPPORT	SUPPORT	LAGERUNG	SOPORTE
	11600.50277.02	4	PROFILATO	JOINT D ETANCHEITE	WEATHERSTRIP	DICHTUNGSRAHEN	PERFIL GOMA
	11600.51108.01	2	SOLETTA LONGHERINA	SEMELLE	FILLER	SOHLE	SOLETA
	11609.50041.00	1	TRAVERSA GD	TRAVERSE	CROSS MEMBER	QUERTRAEGER	TRAVESANO
	11609.50066.00	1	RINFORZO D.GD	RENFORT	REINFORCEMENT	VERSTAERKUNG	REFUERZO
	11610.50015.00	1	SUPPORTO PIANTONE GS	SUPPORT	SUPPORT	LAGERUNG	SOPORTE
	11610.50065.00	1	LONGHER.CENTR.S.GS	LONGERON	SIDE RAIL	SEITENTRAEGER	LARGUERO PEQUENO
	11610.50066.00	1	RINFORZO D. GS	RENFORT	REINFORCEMENT	VERSTAERKUNG	REFUERZO

PARTICOLARI PARTE ANTERIORE TELAIO
DÉTAIL DU CAISSON AVANT
BODY FRONT SECTION DETAILS
VORBAU-EINZELTEILE
PARTICULARES PARTE ANTERIOR BASTIDOR

TAV. 61.11

1ª EDIZIONE 1ère EDITION 1st EDITION 1. AUSGABE 1ª EDICION — APRILE AVRIL APRIL APRIL ABRIL — 1974

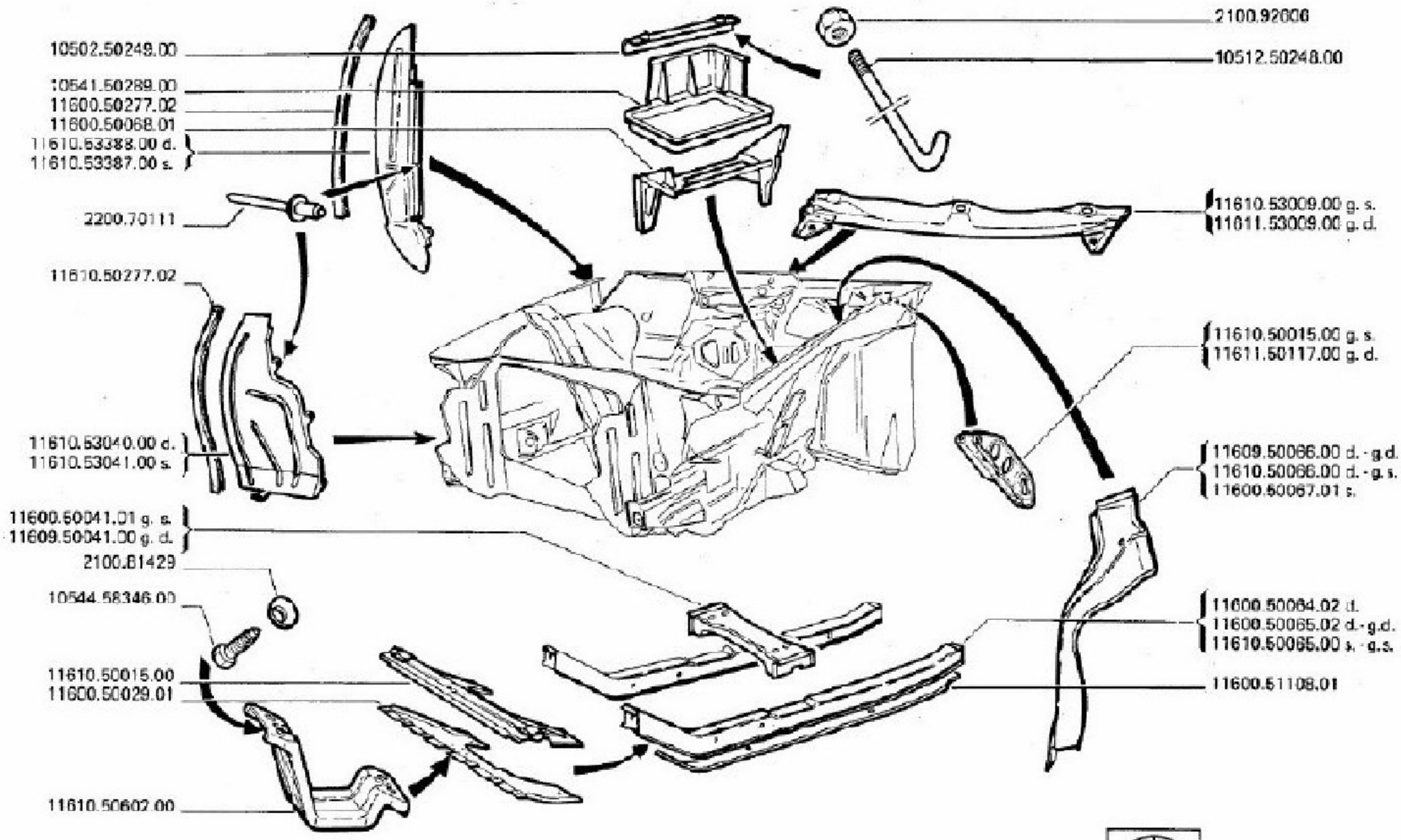

N. 7602

Alfetta GT

TAV. 61.11/0 PARTICOLARI PARTE ANTERIORE TELAIO
DETAIL DU CAISSON AVANT
BODY FRONT SECTION DETAILS
VORBAU-EINZELTEILE
PARTICULARES PARTE ANTERIOR BASTIDOR

MODIFICA	N. ORDINAZIONE	QT.	DENOMINAZIONE	DESIGNATION	DESCRIPTION	BENENNUNG	DENOMINACIONES
	11610.50602.00	1	STAFFA	ETRIER-SUPPORT	BRACKET	HALTERBUEGEL	ESTRIBO
	11610.53009.00	1	PARTE SUP.GS	PANNEAU SUPERIEUR	TOP PANEL	OBERTEIL	PARTE SUPERIOR
	11610.53040.00	1	CHIUSURA ANT.D.	CLOTURE	CLOSING	VERSCHLUSS	CIERRE
	11610.53041.00	1	CHIUSURA ANT.S.	CLOTURE	CLOSING	VERSCHLUSS	CIERRE
	11610.53387.00	1	CHIUSURA POST.S.	CLOTURE	CLOSING	VERSCHLUSS	CIERRE
	11610.53388.00	1	CHIUSURA POST.D.	CLOTURE	CLOSING	VERSCHLUSS	CIERRE
	11611.50117.00	1	SUPPORTO PIANTONE GD	SUPPORT	SUPPORT	LAGERUNG	SOPORTE
	11611.53009.00	1	PARTE SUP.GD	PANNEAU SUPERIEUR	TOP PANEL	OBERTEIL	PARTE SUPERIOR

PARTE CENTRALE TELAIO
SOUBASSEMENT ET PLANCHER
BODY CENTER SECTION
FAHRGESTELLBODEN
PARTE CENTRAL DEL BASTIDOR

TAV. 61.20

1	a EDIZIONE	1974	APRILE
	ère EDITION		AVRIL
	st EDITION		APRIL
	- AUSGABE		APRIL
	ers EDICION		ABRIL

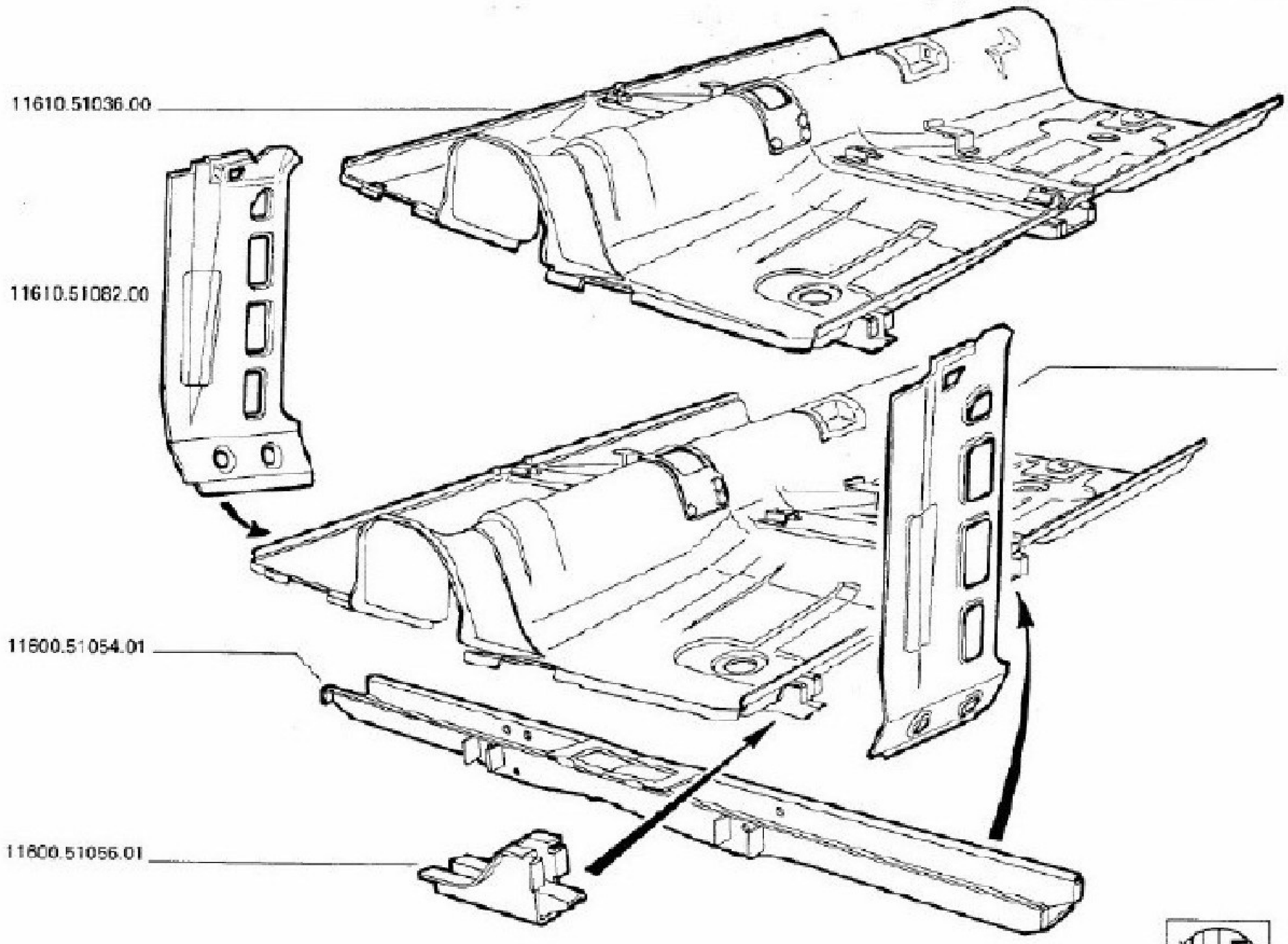

TAV. 61.2070

PARTE CENTRALE TELAIO
SOUBASSEMENT ET PLANCHER
BODY CENTER SECTION
FAHRGESTELLBODEN
PARTE CENTRAL DEL BASTIDOR

MODIFICA	N. ORDINAZIONE	QT.	DENOMINAZIONE	DESIGNATION	DESCRIPTION	BENENNUNG	DENOMINACIONES
	11600.51054.01	1	TRAVERSA CENTR.	TRAVERSE	CROSS MEMBER	QUERTRAEGER	TRAVESANO
	11600.51056.01	2	STAFFA	ETRIER-SUPPORT	BRACKET	HALTERBUEGEL	ESTRIBO
	11610.51036.00	1	PARTE CENTRALE	SOUBASSEMENT	CENTER SECTION	MITTELTEIL	PARTE CENTRAL
	11610.51081.00	1	PARTE LAT.S.	TOLE LATERALE	BULKHEAD SIDE	SEITENTEIL STIRNWAND	PARTE LATERAL
	11610.51082.00	1	PARTE LAT.D.	TOLE LATERALE	BULKHEAD SIDE	SEITENTEIL STIRNWAND	PARTE LATERAL

PARTICOLARI PARTE CENTRALE TELAIO
DETAIL DU SOUBASSEMENT ET PLANCHER
BODY CENTER SECTION DETAILS
FAHRGESTELLBODEN-EINZELTEILE
PARTICULARES PARTE CENTRAL BASTIDOR

TAV. 61.21

1	EDIZIONE	1974	APRILE
	EDITION		AVRIL
	EDITION		APRIL
	AUSGABE		APRIL
	EDICION		ABRIL

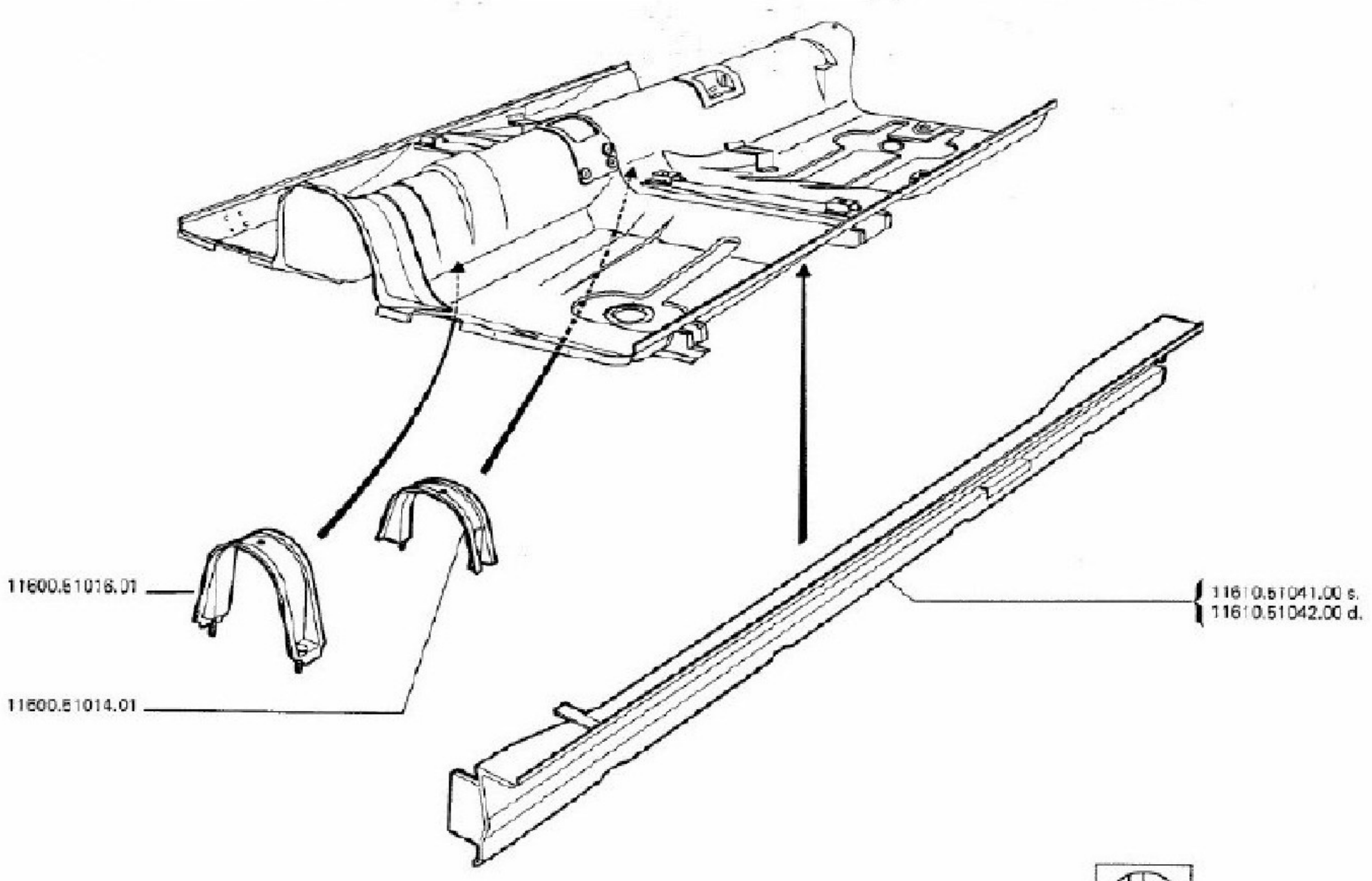

N. 6727

Alfetta GT

MC. 361

TAV. 61.2170

PARTICOLARI PARTE CENTRALE TELAIO
DETAIL DU SOUBASSEMENT ET PLANCHER
BODY CENTER SECTION DETAILS
FAHRGESTELLBODEN-EINZELTEILE
PARTICULARES PARTE CENTRAL BASTIDOR

MODIFICA	N. ORDINAZIONE	QT.	DENOMINAZIONE	DÉSIGNATION	DESCRIPTION	BENENNUNG	DENOMINACIONES
	11600.51014.01	1	SUPPORTO	SUPPORT	SUPPORT	LAGERUNG	SOPORTE
	11600.51016.01	1	TRAVERSA	TRAVERSE	CROSS MEMBER	QUERTRAEGER	TRAVESANO
	11610.51041.00	1	LONGHERONE INT.S.	LONGERON	SIDE RAIL	LAENGSTRAEGER	LARGUERO
	11610.51042.00	1	LONGHERONE INT.D.	LONGERON	SIDE RAIL	LAENGSTRAEGER	LARGUERO

PARTE POSTERIORE TELAIO
COFFRAGE ARRIERE
BODY REAR SECTION
HECK
PARTE POSTERIOR BASTIDOR

TAV. 61.30

1ª	EDIZIONE	1974	APRILE
1re	EDITION		AVRIL
1st	EDITION		APRIL
1.	AUSGABE		APRIL
1ra	EDICION		ABRIL

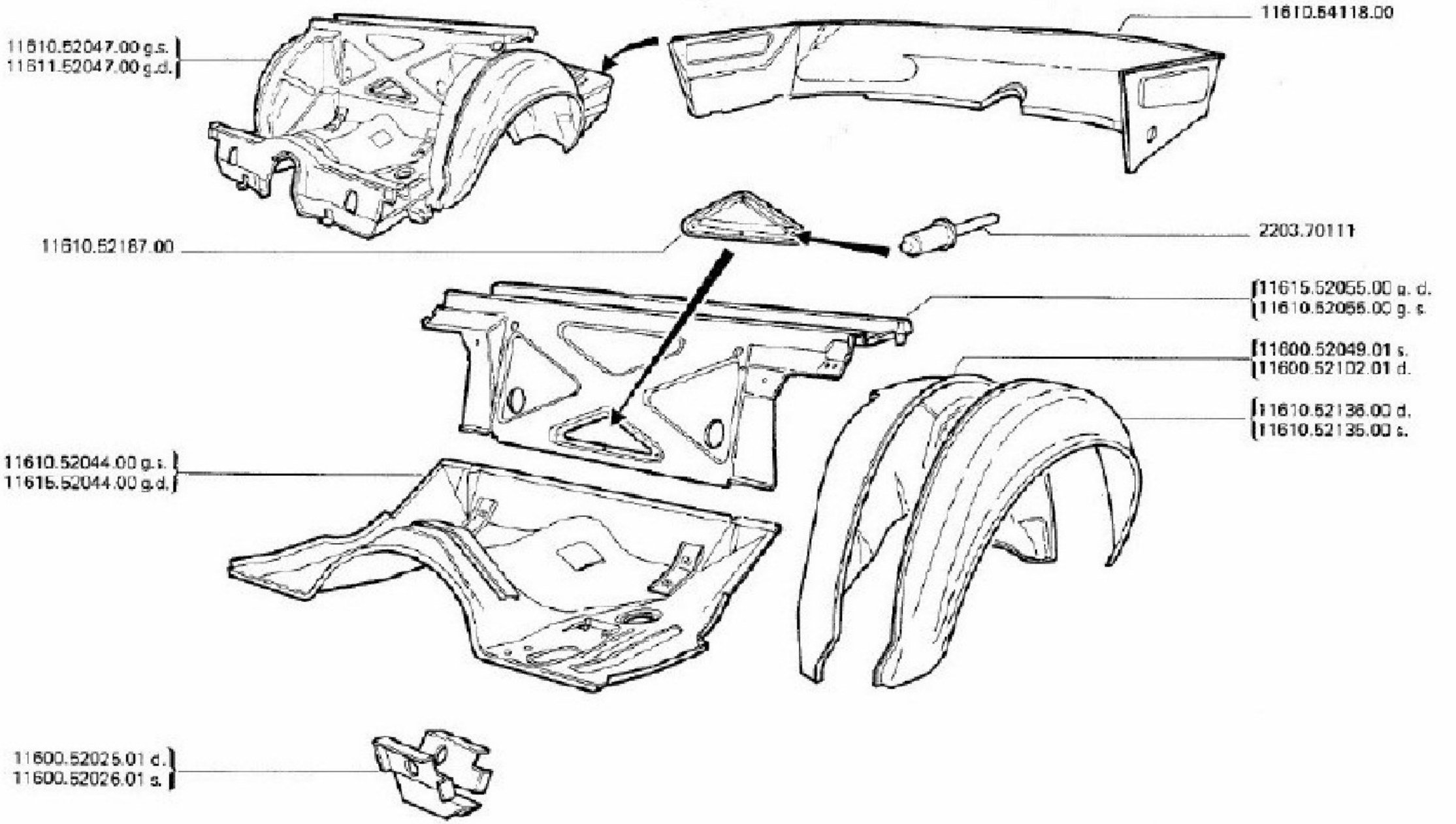

TAV. 61.30/0 PARTE POSTERIORE TELAIO
CAISSON ARRIERE
BODY REAR SECTION
PECK
PARTE POSTERIOR BASTIDOR

MODIFICA	N. ORDINAZIONE	QT.	DENOMINAZIONE	DÉSIGNATION	DESCRIPTION	BENENNUNG	DENOMINACIONES
	2203.70111	4	RIVETTO	RIVET	RIVET	NIET	RIVETE
	11600.52025.01	1	STAFFA	ETRIER-SUPPORT	BRACKET	HALTERBUEGEL	ESTRIBO
	11600.52026.01	1	STAFFA	ETRIER-SUPPORT	BRACKET	HALTERBUEGEL	ESTRIBO
	11600.52049.01	1	PASSARUOTA INT.S.	PASSAGE DE ROUE	WHEELARCH	RADLAUF	CAVIDAD DE RUEDA
	11600.52102.01	1	PASSARUOTA INT.D.	PASSAGE DE ROUE	WHEELARCH	RADLAUF	CAVIDAD DE RUEDA
	11610.52044.00	1	PAVIMENTO GS	PLANCHER	FLOOR	BODEN	PAVIMENTO
	11610.52047.00	1	PARTE POST.GS	SOUBASSEMENT ARRIERE	REAR SECTION	HECKPARTIE	PARTE POSTERIOR
	11610.52055.00	1	PARATIA GS	CLOISON	BULKEAD	TRENNWAND	SEPARADOR
	11610.52135.00	1	PASSARUOTA EST.S.	PASSAGE DE ROUE	WHEELARCH	RADLAUF	CAVIDAD DE RUEDA
	11610.52136.00	1	PASSARUOTA EST.D.	PASSAGE DE ROUE	WHEELARCH	RADLAUF	CAVIDAD DE RUEDA
	11610.52187.00	1	CHIUSURA	CLOTURE	CLOSING	VERSCHLUSS	CIERRE
	11610.54118.00	1	DORSALE	JUPE ARRIERE	PANEL	HECKMITTELSTUECK	DORSAL
	11611.52047.00	1	PARTE POST. GD	SOUBASSEMENT ARRIERE	REAR SECTION	HECKPARTIE	PARTE POSTERIOR
	11615.52044.00	1	PAVIMENTO GD	PLANCHER	FLOOR	BODEN	PAVIMENTO
	11615.52055.00	1	PARATIA GD	CLOISON	BULKEAD	TRENNWAND	SEPARADOR

PARTICOLARI PARTE POSTERIORE TELAIO
DETAIL DU COFFRAGE ARRIERE
BODY REAR SECTION DETAILS
HECK-EINZELTEILE
PARTICULARES PARTE POSTERIOR BASTIDOR

TAV. 61.31

1	EDIZIONE	1974	APRILE
	EDITION		AVRIL
	EDITION		APRIL
	AUSGABE		APRIL
	EDICION		ABRIL

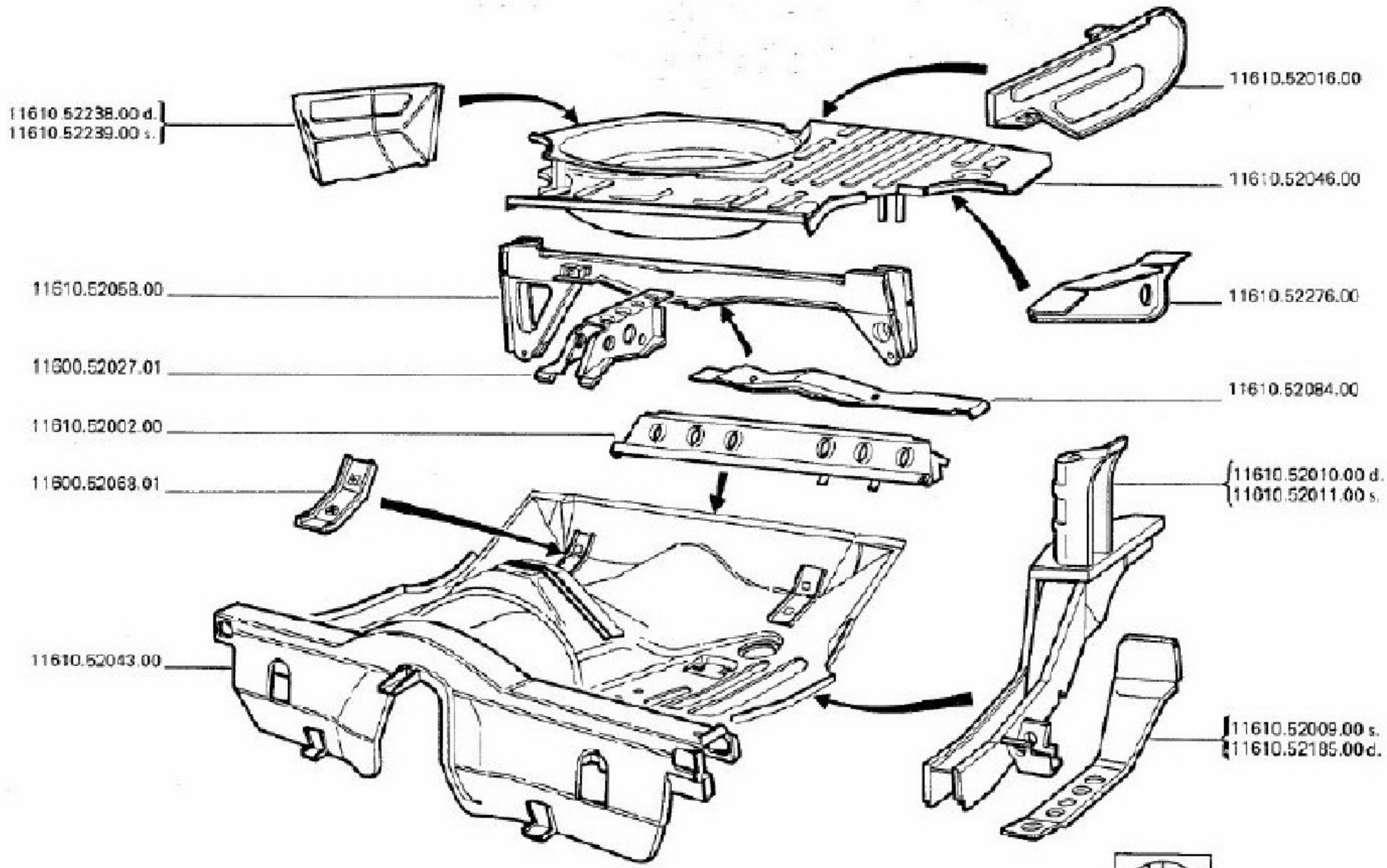

FAV. 61.3170

PARTICOLARI PARTE POSTERIORE TELAIO
DETAIL DU CAISSON ARRIERE
BODY REAR SECTION DETAILS
HECK-EINZELTEILE
PARTICULARES PARTE POSTERIOR BASTIDOR

MODIFICA	N. ORDINAZIONE	QT.	DENOMINAZIONE	DÉSIGNATION	DESCRIPTION	BENENNUNG	DENOMINACIONES
	11600.52027.01	1	SUPPORTO	SUPPORT	SUPPORT	LAGERUNG	SOPORTE
	11600.52068.01	2	STAFFA	ETRIER-SUPPORT	BRACKET	HALTERBUEGEL	ESTRIBO
	11610.52002.00	1	TRAVERSA	TRAVERSE	CROSS MEMBER	QUERTRAEGER	TRAVESANO
	11610.52009.00	1	SOLETTA S.	SEMELLE	FILLER	SOHLE	SOLETA
	11610.52010.00	1	LONGHERONE POST.D.	LONGERON	SIDE RAIL	LAENGSTRAEGER	LARGUERO
	11610.52011.00	1	LONGHERONE POST.S.	LONGERON	SIDE RAIL	LAENGSTRAEGER	LARGUERO
	11610.52016.00	1	LONGHERINA CENTR.	LONGERON	SIDE RAIL	SEITENTRAEGER	LARGUERO PEQUENO
	11610.52043.00	1	TRAVERSA	TRAVERSE	CROSS MEMBER	QUERTRAEGER	TRAVESANO
	11610.52046.00	1	PAVIMENTO	PLANCHER	FLOOR	BODEN	PAVIMENTO
	11610.52058.00	1	TRAVERSA POST.	TRAVERSE	CROSS MEMBER	QUERTRAEGER	TRAVESANO
	11610.52084.00	1	SOLETTA	SEMELLE	FILLER	SOHLE	SOLETA
	11610.52185.00	1	SOLETTA D.	SEMELLE	FILLER	SOHLE	SOLETA
	11610.52238.00	1	LONGHERINA LAT.D.	LONGERON	SIDE RAIL	SEITENTRAEGER	LARGUERO PEQUENO
	11610.52239.00	1	LONGHERINA LAT.S.	LONGERON	SIDE RAIL	SEITENTRAEGER	LARGUERO PEQUENO
	11610.52276.00	1	STAFFA PER TRAINO	ETRIER-SUPPORT	BRACKET	HALTERBUEGEL	ESTRIBO

TETTO-STRUTTURA PARABREZZA-FINESTRINO POSTERIORE
PAVILLON - AUVENT ET LUNETTE ARRIERE
ROOF-WINDSHIELD AND REAR WINDOW FRAME
CACH-WINDSCHUTZ-UND HECKFENSTER-ROHBAU
TECHO-MARCO PARABRISAS Y VENTANA POSTERIOR

TAV. 61.40

1ª	EDIZIONE	1974	APRILE
1ère	EDITION		APRIL
1er	EDITION		APRIL
1	AUSGABE		APRIL
1ère	EDICION		APRIL

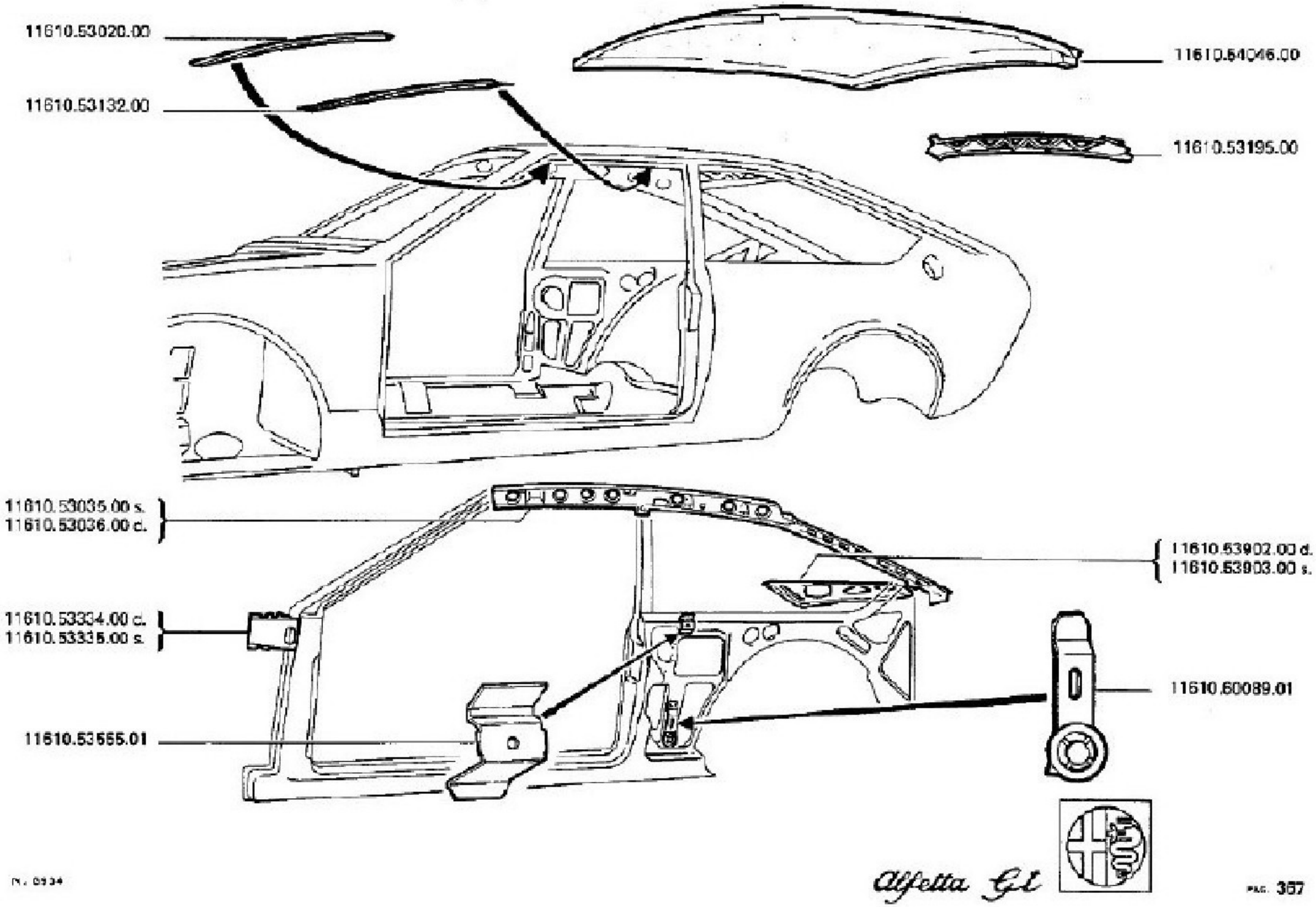

Alfetta GT

TAV. 61.40/0

TETTO-STRUTTURA PARABREZZA-FINESTRINO POSTERIORE
PAVILLON - AUVENT ET LUNETTE ARRIERE
ROOF-WINDSHIELD AND REAR WINDOW FRAME
DACH-WINDSCHUTZ-UND HECKFENSTER-ROHBAU
TECHO-MARCO PARABRISAS Y VENTANA POSTERIOR

MODIFICA	N. ORDINAZIONE	QT.	DENOMINAZIONE	DÉSIGNATION	DESCRIPTION	BENENNUNG	DENOMINACIONES
	11610.53020.00	1	CENTINA ANT.	ARCEAU DE TOIT	RIB	DACHSPRIEGEL	ARCO
	11610.53035.00	1	CHIUSURA MONTANTE S.	CLOTURE	CLOSING	VERSCHLUSS	CIERRE
	11610.53036.00	1	CHIUSURA MONTANTE D.	CLOTURE	CLOSING	VERSCHLUSS	CIERRE
	11610.53132.00	1	CENTINA CENTR.	ARCEAU DE TOIT	RIB	DACHSPRIEGEL	ARCO
	11610.53195.00	1	TRAVERSA	TRAVERSE	CROSS MEMBER	QUERTRAEGER	TRAVESANO
	11610.53334.00	1	COLLEGAMENTO D.	LIAISON TRAVERSE	REINFORCEMENT	ANSCHLUSS	CONEXION
	11610.53335.00	1	COLLEGAMENTO S.	LIAISON TRAVERSE	REINFORCEMENT	ANSCHLUSS	CONEXION
	11610.53555.01	2	STAFFA SUP.	ETRIER-SUPPORT	BRACKET	HALTERBUEGEL	ESTRIBO
	11610.53902.00	1	COLLEGAMENTO LAT.D.	LIAISON TRAVERSE	REINFORCEMENT	ANSCHLUSS	CONEXION
	11610.53903.00	1	COLLEGAMENTO LAT.S.	LIAISON TRAVERSE	REINFORCEMENT	ANSCHLUSS	CONEXION
	11610.54046.00	1	TETTO	TOIT	ROOF	DACH	TECHO
	11610.60089.01	2	STAFFA INF.	ETRIER-SUPPORT	BRACKET	HALTERBUEGEL	ESTRIBO

PARTICOLARI STRUTTURA PARABREZZA
DETAIL DE L'AUVENT
WINDSHIELD FRAME DETAILS
WINDSCHUTZ-ROHBAU EINZELTEILE
PARTICULARES MARCO PARABRISAS

TAV. 61.41

1	EDIZIONE	1974	APRILE
	EDITION		AVRIL
	EDITION		APRIL
	AUSGABE		APRIL
	EDICION		ABRIL

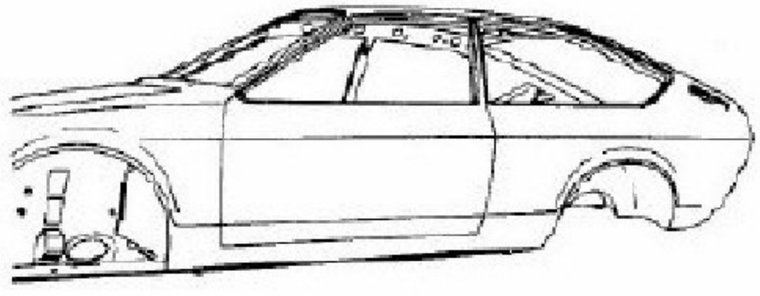

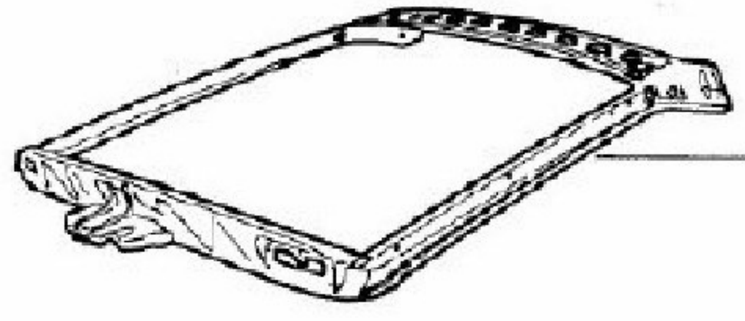

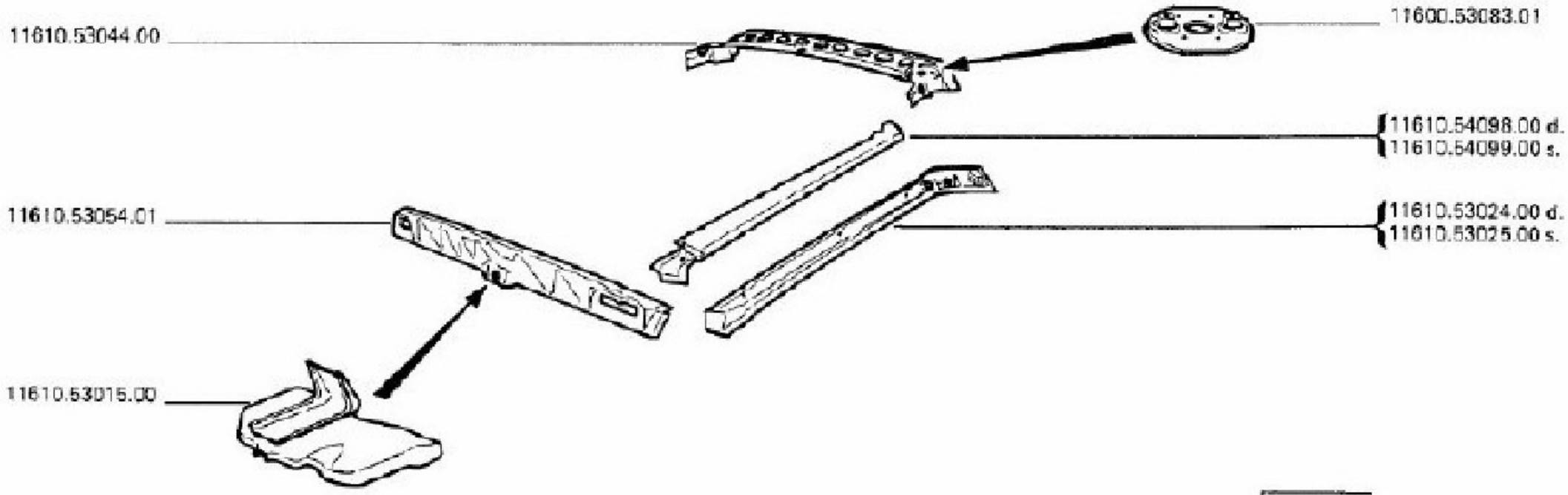

TAV. 61.41/0

PARTICOLARI STRUTTURA PARABREZZA
DETAIL DE L AUVENT
WINDSHIELD FRAME DETAILS
WINDSCHUTZ-ROHBAU-EINZELTEILE
PARTICULARES MARCO PARABRISAS

MODIFICA	N. ORDINAZIONE	QT.	DENOMINAZIONE	DESIGNATION	DESCRIPTION	BENENNUNG	DENOMINACIONES
	11600.53083.01	1	ATTACCO PARASOLE	EMMANCHEMENT	ATTACHMENT	BEFESTIGUNG	ENGANCHE
	11610.53015.00	1	PROTEZIONE	PROTECTEUR	PROTECTION	SCHUTZ	PROTECCION
	11610.53024.00	1	CHIUSURA D.	CLOTURE	CLOSING	VERSCHLUSS	CIERRE
	11610.53025.00	1	CHIUSURA S.	CLOTURE	CLOSING	VERSCHLUSS	CIERRE
	11610.53034.00	1	STRUTTURA COMPL.	STRUCTURE	STRUCTURE	STRUKTUR	ESTRUCTURA
	11610.53044.00	1	TRAVERSA SUP.	TRAVERSE	CROSS MEMBER	QUERTRAEGER	TRAVESANO
	11610.53054.01	1	TRAVERSA	TRAVERSE	CROSS MEMBER	QUERTRAEGER	TRAVESANO
	11610.54098.00	1	COPRIMONTANTE D.	EAGUETTE PARE BRISE	WINDSHIELD	SAEULENVERKLEIDUNG	CUBREMONTANTE
	11610.54099.00	1	COPRIMONTANTE S.	EAGUETTE PARE BRISE	WINDSHIELD	SAEULENVERKLEIDUNG	CUBREMONTANTE

STRUTTURA FIANCATE
COTES DE CAISSE
SIDE FRAME
SEITENTEILE-ROHBAU
ESTRUCTURA FLANCOS

TAV. 61.50

1ª	EDIZIONE	1974	APRILE
1ère	EDITION		AVRIL
1st	EDITION		APRIL
1ª	AUSGABE		APRIL
1ª	EDICION		ABRIL

DATA ULTIMO AGGIORNAMENTO

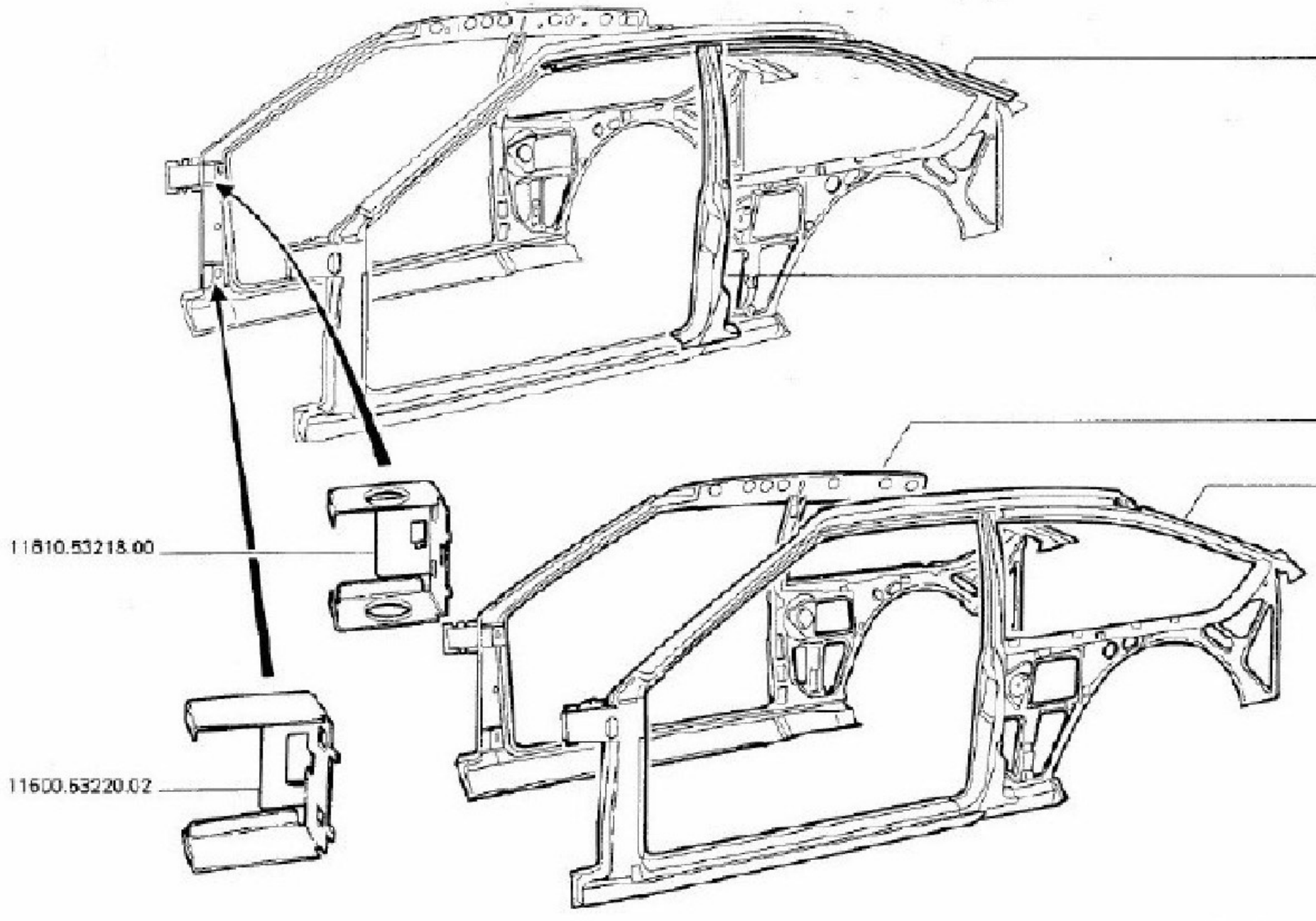

TAV. 61.5070

STRUTTURA FIANCATE
COTES DE CAISSE
SIDE FRAME
SEINTENTEILE-RONBAU
ESTRUCTURA FLANCOS

MODIFICA	N. ORDINAZIONE	QT.	DENOMINAZIONE	DESIGNATION	DESCRIPTION	BENENNUNG	DENOMINACIONES
	11600.53220.02	2	DIAFRAMMA INF.	DIAPHRAGME	DIAPHRAGM	MEMBRAN	DIAFRAGMA
	11610.53028.00	1	MONTANTE D.	PIED	PILLAR	SAEULE	MONTANTE
	11610.53029.00	1	MONTANTE S.	PIED	PILLAR	SAEULE	MONTANTE
	11610.53030.00	1	FIANCATA D.	PANNEAU LATERAL	SIDE PANEL	SEITENWAND	FLANCO
	11610.53031.00	1	FIANCATA S.	PANNEAU LATERAL	SIDE PANEL	SEITENWAND	FLANCO
	11610.53205.01	1	GOCCIOLATOIO S.	GOUTTIERE	GUTTER	TROPFENFAENGER	COLECTOR
	11610.53206.01	1	GOCCIOLATOIO D.	GOUTTIERE	GUTTER	TROPFENFAENGER	COLECTOR
	11610.53218.00	2	DIAFRAMMA SUP.	DIAPHRAGME	DIAPHRAGM	MEMBRAN	DIAFRAGMA

PARTICOLARI DELLA FIANCATA
DETAIL DES COTES DE CAISSE
SIDE FRAME DETAILS
SEINTENTEILE EINZELTEILE
DETALLE FLANCOS

TAV. 61.51

1ª	EDIZIONE	1974	APRILE
2ª	EDITION		AVRIL
3ª	EDITION		APRIL
4ª	AUSGABE		APRIL
5ª	EDICION		ABRIL

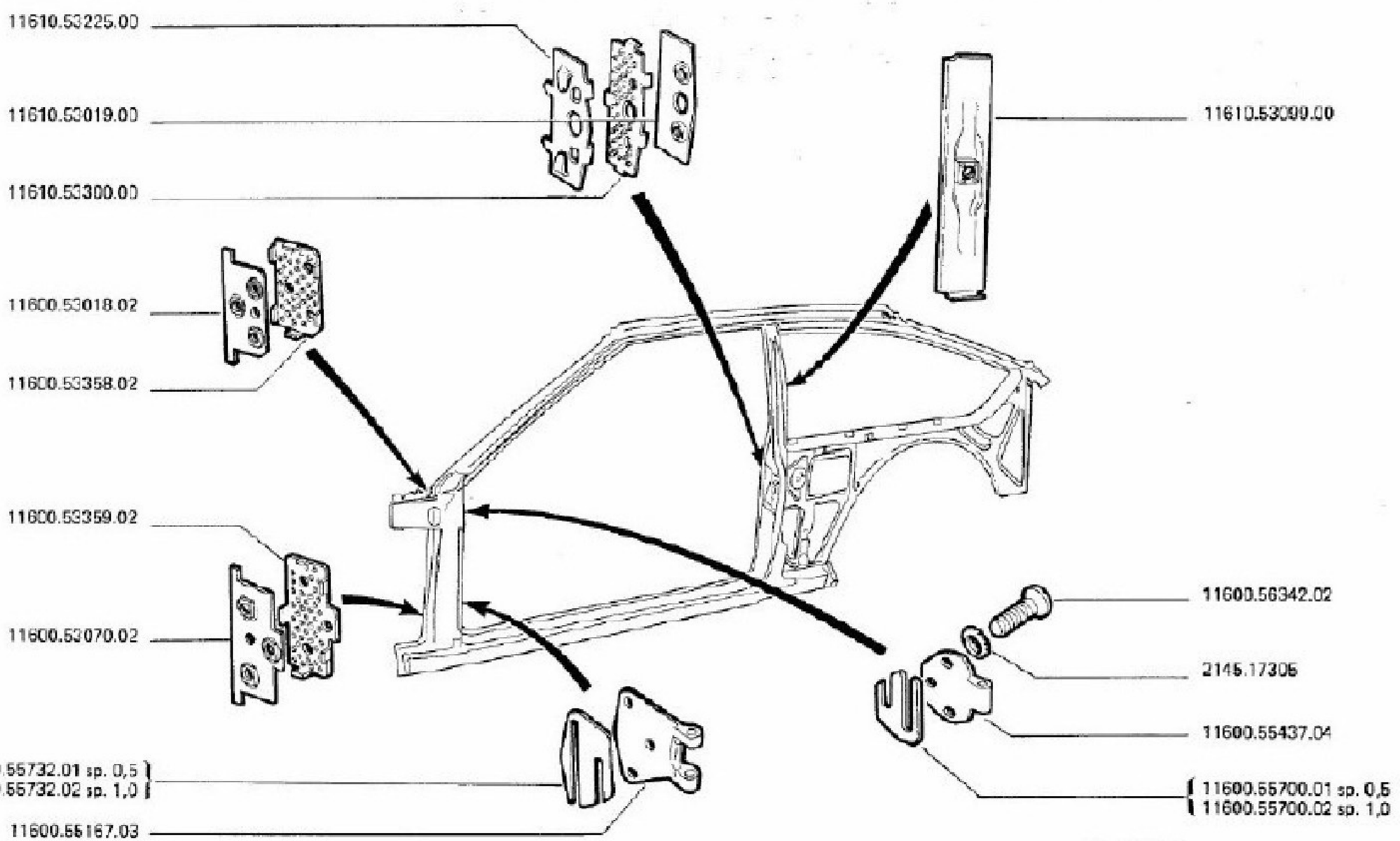

TAV. 61.5170

PARTICOLARI DELLA FIANCATA
DETAIL DES COTES DE CAISSE
SIDE FRAME DETAILS
SEITENTEILE-EINZELTEILE
DETALLE FLANCOS

MODIFICA	N. ORDINAZIONE	QT.	DENOMINAZIONE	DÉSIGNATION	DESCRIPTION	BENENNUNG	DENOMINACIONES
	2145.17305	12	RONDELLA	RONDELLE	WASHER	SCHEIBE	ARANDELLA
	11600.53018.02	2	PIASTRINA SUP.	PLAQUETTE	PLATE	PLAETTCHEN	PLAQUITA
	11600.53070.02	2	PIASTRINA INF.	PLAQUETTE	PLATE	PLAETTCHEN	PLAQUITA
	11600.53358.02	2	PIASTRINA ANTIFRIZ.	PLAQUETTE	PLATE	PLAETTCHEN	PLAQUITA
	11600.53359.02	2	PIASTRINA ANTIFRIZ.	PLAQUETTE	PLATE	PLAETTCHEN	PLAQUITA
	11600.55167.03	2	CERNIERA INF.	CHARNIERE	HINGE	SCHARNIER	BISAGRA
	11600.55437.04	2	CERNIERA SUP.	CHARNIERE	HINGE	SCHARNIER	BISAGRA
	11600.55700.01	0	SPESSORE SUP 40,5	CALE	SPACER	BEILAGE	ESPESOR
	11600.55700.02	0	SPESSORE SUP. +1.0	CALE	SPACER	BEILAGE	ESPESOR
	11600.55732.01	0	SPESSORE INF.40,5	CALE	SPACER	BEILAGE	ESPESOR
	11600.55732.02	0	SPESSORE INF.+1.0	CALE	SPACER	BEILAGE	ESPESOR
	11600.56342.02	12	VITE	VIS	SCREW	SCHRAUBE	TORNILLO
	11610.53019.00	2	PIASTRINA RISCONTRO	PLAQUETTE	PLATE	PLAETTCHEN	PLAQUITA
	11610.53099.00	2	ATTACCO CINT.SIC.	EMMANCHEMENT	ATTACHMENT	BEFESTIGUNG	ENGANCHE
	11610.53225.00	4	RINFORZO	RENFORT	REINFORCEMENT	VERSTAERKUNG	REFUERZO
	11610.53300.00	4	PIASTRINA ANTIFRIZ.	PLAQUETTE	PLATE	PLAETTCHEN	PLAQUITA

PANNELLERIA ANTERIORE
ÉLÉMENTS AVANT TOLERIE D'HABILLAGE
FRONT PANELS
VORDERE BLECHTEILE
PANELERIA ANTERIOR

TAV. 61.60

1	EDIZIONE	1974	APRILE
	EDITION		AVRIL
	EDITION		APRIL
	AUSGABE		APRIL
	EDICION		ABRIL

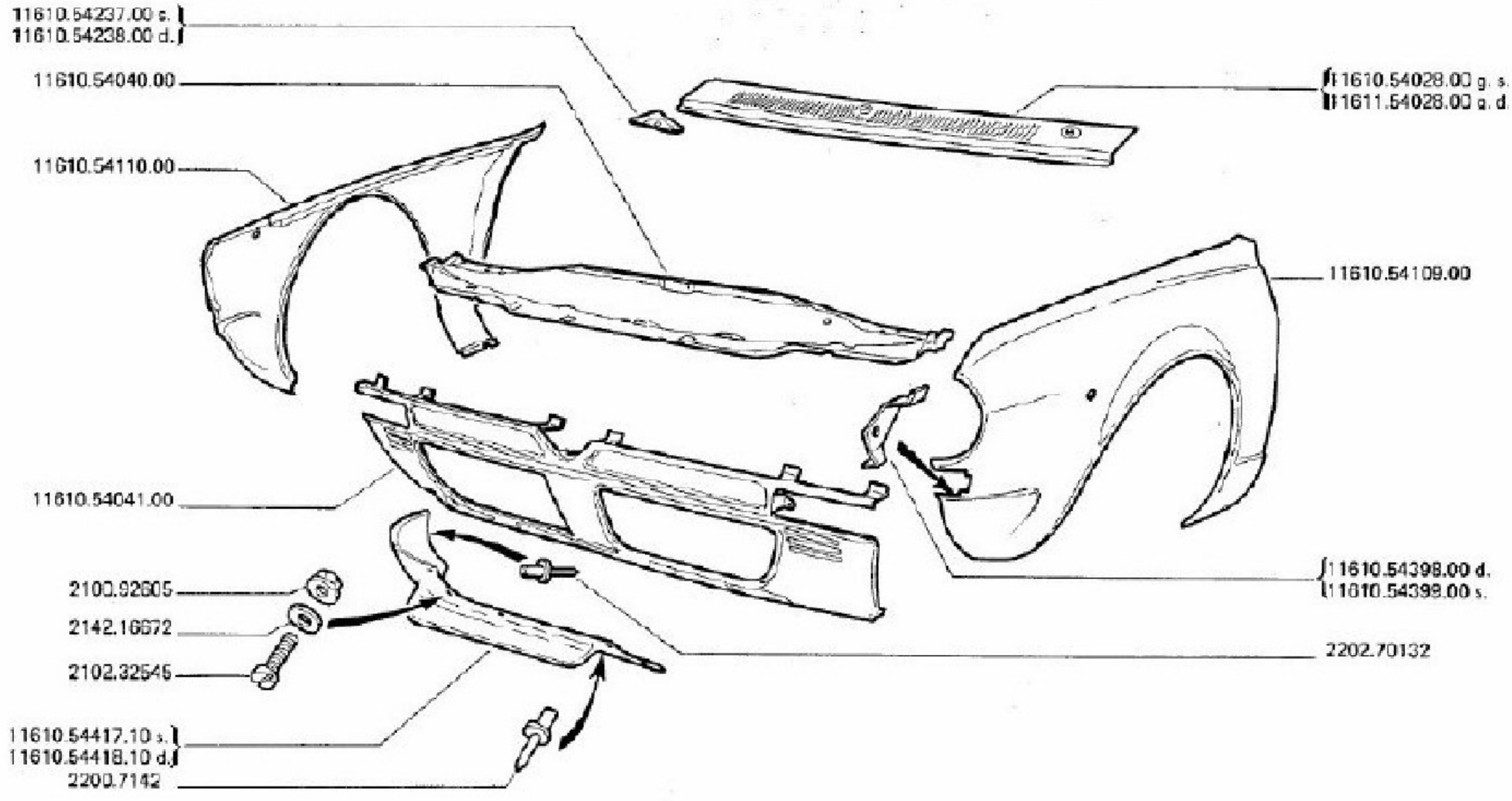

TAV. 61.60/0

PANNELLERIA ANTERIORE
CAISSON AVANT TOLERIE D HABILLAGE
FRONT PANELS
VORDERE BLECHTEILE
PANELERIA ANTERIOR

MODIFICA	N. ORDINAZIONE	QT.	DENOMINAZIONE	DESIGNATION	DESCRIPTION	BENENNUNG	DENOMINACIONES
	2100.92605	2	DADO	ECROU	NUT	MUTTER	TUERCA
	2102.32545	2	VITE	VIS	SCREW	SCHRAUBE	TORNILLO
	2142.16672	2	RONDELLA	RONDELLE	WASHER	SCHEIBE	ARANDELLA
	2202.70132	4	RIVETTO	RIVET	RIVET	NIET	RIVETE
	2202.70142	10	RIVETTO	RIVET	RIVET	NIET	RIVETE
	11610.54028.00	1	PANNELLO INF.GS	TOLE	SHEET METAL	BLECH	CHAPA
	11610.54040.00	1	FRONTALE SUP.	PANNEAU FRONTAL	FRONT END	FRONTVERKLEIDUNG	FRONTAL
	11610.54041.00	1	FRONTALE INF.	PANNEAU FRONTAL	FRONT END	FRONTVERKLEIDUNG	FRONTAL
	11610.54109.00	1	PARAFANGO S.	GARDE-BOUE	FENDER	KOTFLUEGEL	GUARDABARROS
	11610.54110.00	1	PARAFANGO D.	GARDE-BOUE	FENDER	KOTFLUEGEL	GUARDABARROS
	11610.54237.00	1	COLLEGAMENTO S.	LIAISON TRAVERSE	REINFORCEMENT	ANSCHLUSS	CONEXION
	11610.54238.00	1	COLLEGAMENTO D.	LIAISON TRAVERSE	REINFORCEMENT	ANSCHLUSS	CONEXION
	11610.54398.00	1	SQUADRETTA D.	GOUSSET	BRACKET	WINKELSTUECK	ESCUADRITA
	11610.54399.00	1	SQUADRETTA S.	GOUSSET	BRACKET	WINKELSTUECK	ESCUADRITA
	11610.54417.10	1	ALETTONE S.	BECQUET	SPOILER	SPOILER	SPOILER
	11610.54418.10	1	ALETTONE D.	BECQUET	SPOILER	SPOILER	SPOILER
	11611.54028.00	1	PANNELLO INF.GD	TOLE	SHEET METAL	BLECH	CHAPA

PANNELLERIA POSTERIORE
TOLERIE D'HABILLAGE ARRIERE
REAR PANELS
HINTERE BLECHTEILE
PANELERIA POSTERIOR

TAV. 61.70

1	EDIZIONE	1974	APRILE
	EDITION		AVRIL
	EDITION		APRIL
	AUSGABE		APRIL
	EDICION		ABRIL

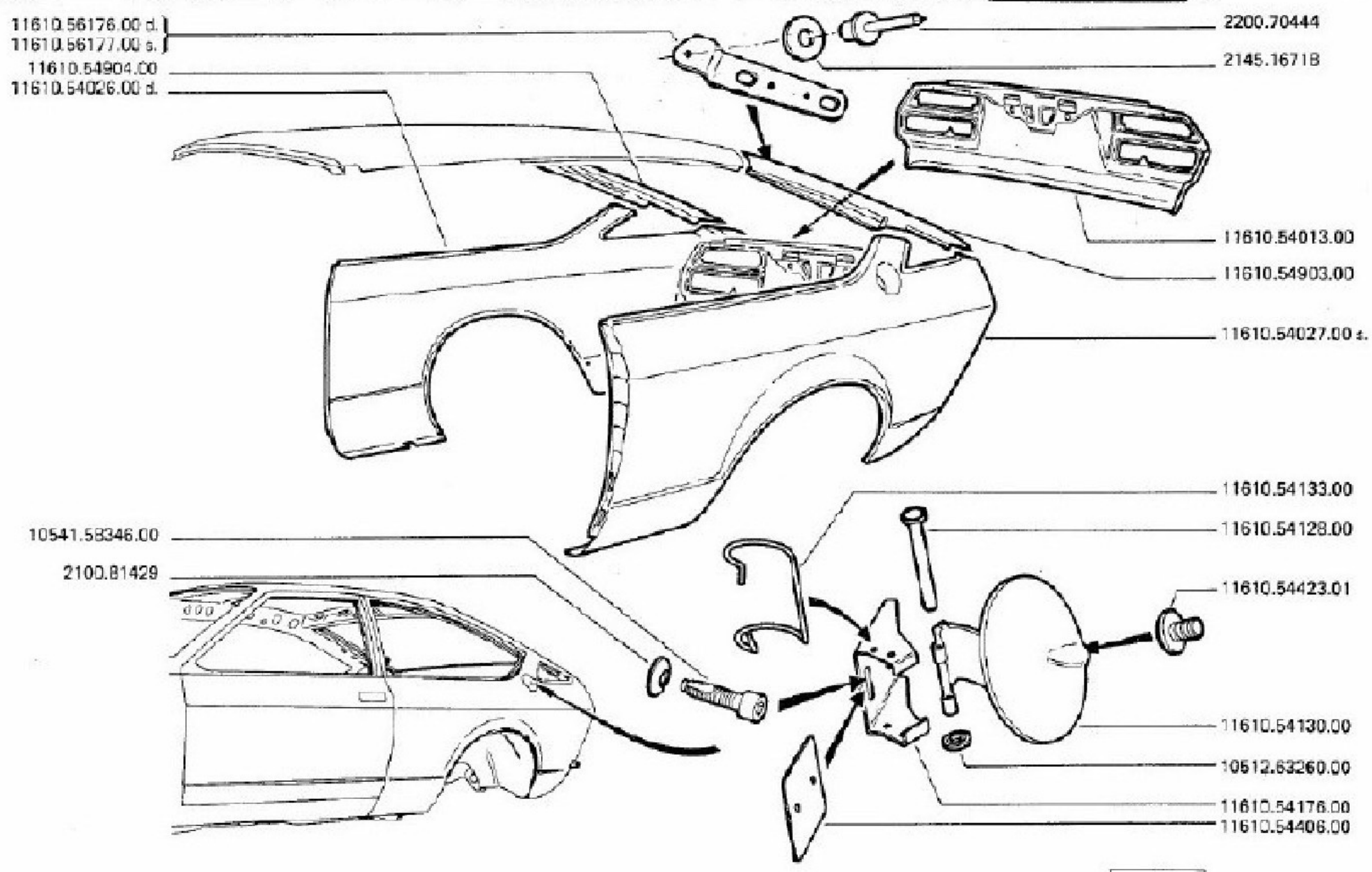

TAV. 61.7040

PANNELLERIA POSTERIORE
CAISSON ARRIERE TOLERIE D HABILLAGE
REAR PANELS
HINTERE BLECHTEILE
PANELERIA POSTERIOR

MODIFICA	N. ORDINAZIONE	QT.	DENOMINAZIONE	DESIGNATION	DESCRIPTION	BENENNUNG	DENOMINACIONES
	2100.01429	2	RONDELLA	RONDELLE	WASHER	SCHEIBE	ARANDELLA
	2145.16718	2	RONDELLA	RIVET	RIVET	NIET	RIVETE
	2200.70444	2	RIVETTO	AGRAFE	CLIP	KLEMMSTUECK	MUELLECITO
	10512.63260.00	1	MOLLETTA	AGRAFE	CLIP	KLEMMSTUECK	MUELLECITO
	10541.58346.00	2	VITE	VIS	SCREW	SCHRAUBE	TORNILLO
	11610.54013.00	1	DORSALE	JUPE ARRIERE	PANEL	HECKMITTELSTUECK	DORSAL
	11610.54030.00	1	PARAFANGO D.	GARDE-BOUE	FENDER	KOTFLUEGEL	GUARDABARROS
	11610.54031.00	1	PARAFANGO S.	GARDE-BOUE	FENDER	KOTFLUEGEL	GUARDABARROS
	11610.54128.00	1	PERNO	AXE	PIVOT PIN	ZAPFEN	PERNO
	11610.54130.00	1	SPORTELLO	PORTILLON	LID	KLAPPE	PORTEZUELA
	11610.54133.00	1	MOLLA	RESSORT	SPRING	FEDER	MUELLE
	11610.54176.00	1	SQUADRETTA	GOUSSET	BRACKET	WINKELSTUECK	ESCUADRITA
	11610.54406.00	0	SPESSORE	CALE	SPACER	BEILAGE	ESPESOR
	11610.54423.01	1	GRANO	PIED DE CENTRAGE	DOWEL	PASSTIFT	PASADOR DE ENSAMBLE
	11610.54903.00	1	PARTE LAT.S.	TOLE LATERALE	BULKHEAD SIDE	SEITENTEIL STIRNWAND	PARTE LATERAL
	11610.54904.00	1	PARTE LAT.D.	TOLE LATERALE	BULKHEAD SIDE	SEITENTEIL STIRNWAND	PARTE LATERAL
	11610.56176.00	1	CERNIERA D.	CHARNIERE	HINGE	SCHARNIER	BISAGRA
	11610.56177.00	1	CERNIERA S.	CHARNIERE	HINGE	SCHARNIER	BISAGRA

QUADRO PORTA APPARECCHI PER VETTURE G.S.
PLANCHE DE BORD VOIT. D. A G.
INSTRUMENT PANEL L.H.D. CARS
INSTRUMENTENBRETT FUR LL.
TABLERO DE INSTRUMENTOS PARA AUTOMOV. G. IZQ.

TAV. 62.01

1ª	EDIZIONE	1974	APRILE
1st	EDITION		APRIL
1e	EDITION		APRIL
1.	AUSGABE		APRIL
1ª	EDICION		ABRIL

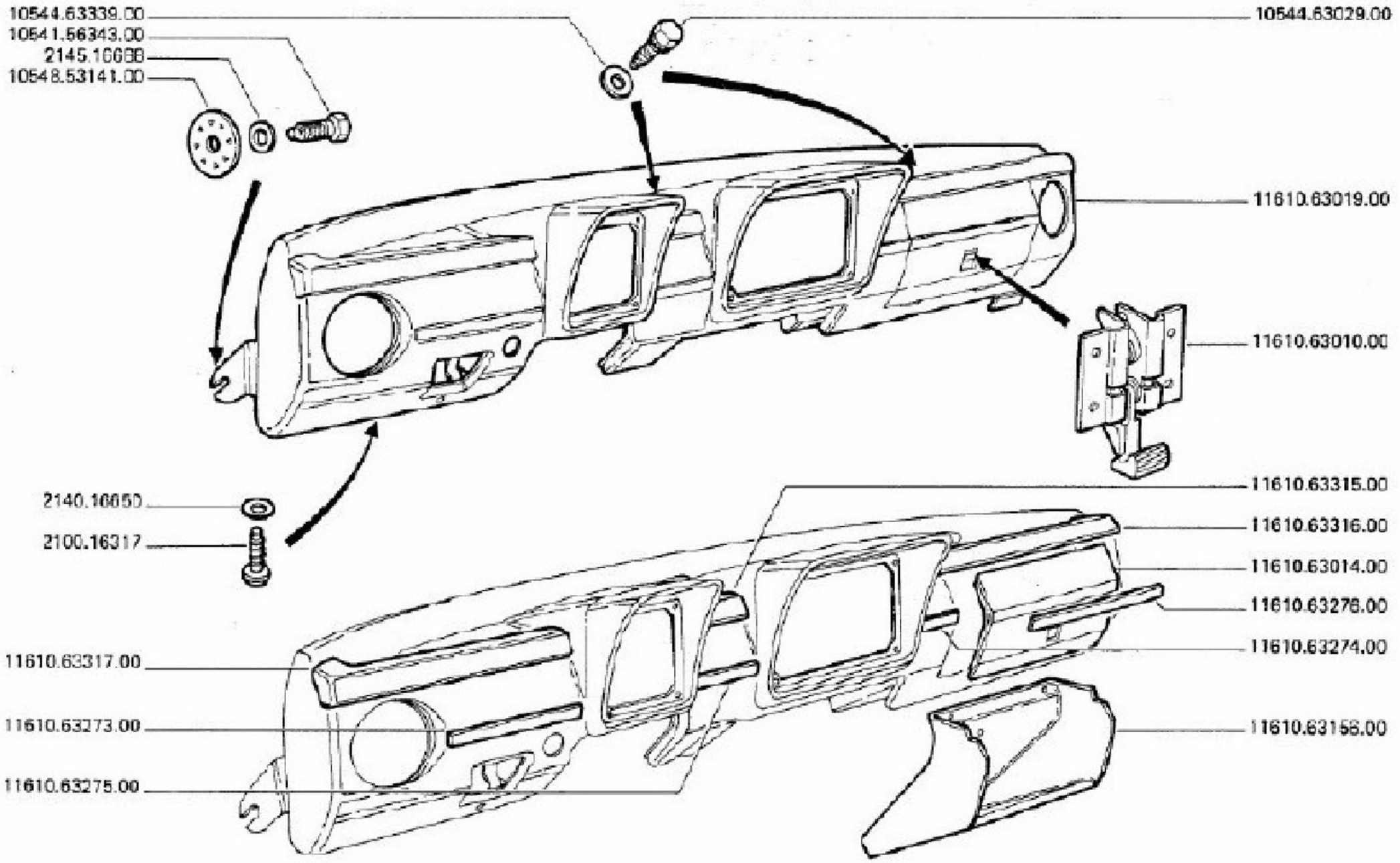

TAV. 62.0140 QUADRO PORTA APPARECCHI PER VETTURE G.S.
PLANCHE DE BORD VOIT. D. A G.
INSTRUMENT PANEL L.H.D. CARS
INSTRUMENTENBRETT FUR LL
TABLERO DE ISTRUMENTOS PARA AUTOMOV.G.IZQ.

MODIFICA	N. ORDINAZIONE	QT.	DENOMINAZIONE	DESIGNATION	DESCRIPTION	BENENNUNG	DENOMINACIONES
	2100.16317	1	VITE	VIS	SCREW	SCHRAUBE	TORNILLO
	2140.16650	1	RONDELLA	RONDELLE	WASHER	SCHEIBE	ARANDELLA
	2145.16688	2	RONDELLA	RONDELLE	WASHER	SCHEIBE	ARANDELLA
	10541.56343.00	2	VITE	VIS	SCREW	SCHRAUBE	TORNILLO
	10544.63029.00	2	VITE	VIS	SCREW	SCHRAUBE	TORNILLO
	10544.63339.00	2	RONDELLA	RONDELLE	WASHER	SCHEIBE	ARANDELLA
	10548.53141.00	2	PIASTRINA	PLAQUETTE	PLATE	PLAETTCHEN	PLAQUITA
	11610.63010.00	1	SERRATURA	SERRURE	LOCK	SCHLOSS	CERRADURA
	11610.63014.00	1	SPORTELLO	PORTILLON	LID	KLAPPE	PORTEZUELA
	11610.63019.00	1	QUADRO APPARECCHI	PLANCHE DE BORD	INSTRUMENT PANEL	ARMATURENBRETT	TABLERO INSTRUMENTOS
	11610.63156.00	1	CASSETTO	VIDE-POCHE	LOCKER	HANDSCHUHKASTEN	CAJON
	11610.63273.00	1	PROFILATO INF.S.	ENJOLIVEUR	MOULDING	PROFIL	PERFIL
	11610.63274.00	1	PROFILATO INF.	ENJOLIVEUR	MOULDING	PROFIL	PERFIL
	11610.63275.00	1	PROFILATO INF.CENTR.	ENJOLIVEUR	MOULDING	PROFIL	PERFIL
	11610.63276.00	1	PROFILATO SPORTELLO	ENJOLIVEUR	MOULDING	PROFIL	PERFIL
	11610.63315.00	1	PROFILATO SUP.CENTR.	ENJOLIVEUR	MOULDING	PROFIL	PERFIL
	11610.63316.00	1	PROFILATO SUP.D.	ENJOLIVEUR	MOULDING	PROFIL	PERFIL
	11610.63317.00	1	PROFILATO SUP.S.	ENJOLIVEUR	MOULDING	PROFIL	PERFIL

QUADRO PORTA APPARECCHI PER VETTURE
PLACHE DE BORD VOIT.
INSTRUMENT PANEL CARS
INSTRUMENTENBRETT FUR
TABLERO DE INSTRUMENTOS PARA AUTOMOV

G. D.

TAV. 82,10

1ª	EDIZIONE	1974	APRILE	DATA DELL'ANNO AGGIORNAMENTO
1st	EDITION		AVRIL	
1st	EDITION		APRIL	
1.	AUSGABE		APRIL	
1ª	EDICION		APRIL	

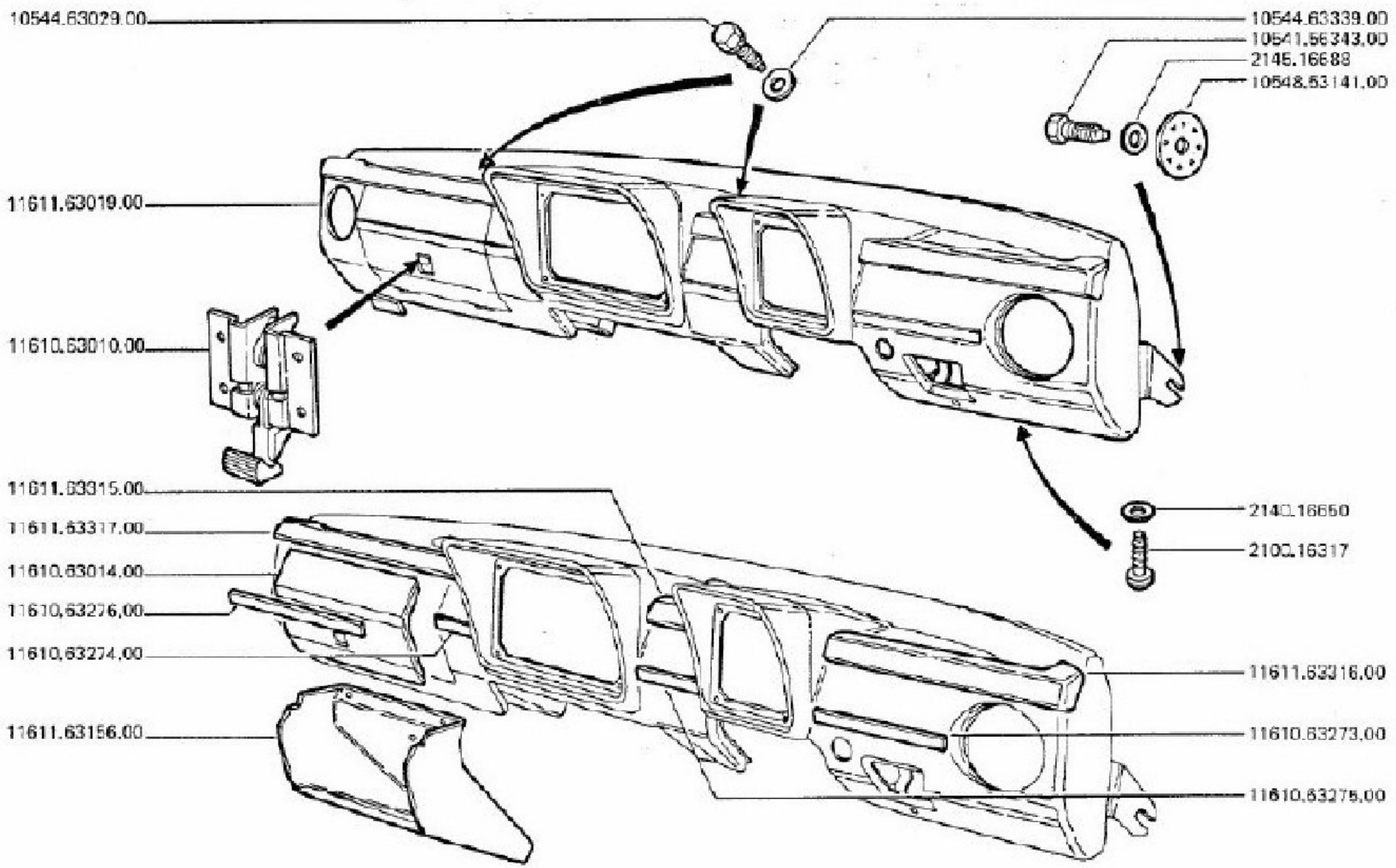

Alfetta GT

TAV. 62.1070

QUADRO PORTA APPARECCHI PER VETTURE G.D.
PLANCHE DE BORD VOIT. D. A D.
INSTRUMENT PANEL FOR R.H.D. CARS
INSTRUMENTENBRETT FÜR RL
TABLERO DE ISTRUMENTOS PARA AUTOMOV.G.D.

ADOZIONE	N. ORDINAZIONE	QT.	DENOMINAZIONE	DESIGNATION	DESCRIPTION	BEZEICHNUNG	DENOMINACIONES
	2100.16317	1	VITE	VIS	SCREW	SCHRAUBE	TORNILLO
	2140.16650	1	RONDELLA	RONDELLE	WASHER	SCHEIBE	ARANDELLA
	2145.16688	2	RONDELLA	RONDELLE	WASHER	SCHEIBE	ARANDELLA
	10541.56343.00	2	VITE	VIS	SCREW	SCHRAUBE	TORNILLO
	10544.63029.00	2	VITE	VIS	SCREW	SCHRAUBE	TORNILLO
	10544.63339.00	2	RONDELLA	RONDELLE	WASHER	SCHEIBE	ARANDELLA
	10548.53141.00	2	PIASTRINA	PLAQUETTE	PLATE	PLAETTCHEN	PLAQUITA
	11610.63010.00	1	SERRATURA	SERRURE	LOCK	SCHLOSS	CERRADURA
	11610.63014.00	1	SPORTELLO	PORTILLON	LID	KLAPPE	PORTEZUELA
	11610.63273.00	1	PROFILATO INF.D.	ENJOLIVEUR	MOULDING	PROFIL	PERFIL
	11610.63274.00	1	PROFILATO INF.	ENJOLIVEUR	MOULDING	PROFIL	PERFIL
	11610.63275.00	1	PROFILATO INF.CENTR.	ENJOLIVEUR	MOULDING	PROFIL	PERFIL
	11610.63276.00	1	PROFILATO SPORTELLO	ENJOLIVEUR	MOULDING	PROFIL	PERFIL
	11611.63019.00	1	QUADRO APPARECCHI	PLANCHE DE BORD	INSTRUMENT PANEL	ARMATURENBRETT	TABLERO INSTRUMENTOS
	11611.63156.00	1	CASSETTO	VIDE-POCHE	LOCKER	HANDSCHUHKASTEN	CAJON
	11611.63315.00	1	PROFILATO SUP.CENTR.	ENJOLIVEUR	MOULDING	PROFIL	PERFIL
	11611.63316.00	1	PROFILATO SUP.D.	ENJOLIVEUR	MOULDING	PROFIL	PERFIL
	11611.63317.00	1	PROFILATO SUP.S.	ENJOLIVEUR	MOULDING	PROFIL	PERFIL

1ª EDIZIONE APRILE 1974
1st EDITION APRIL
1re EDITION AVRIL
1. AUSGABE APRIL
1ra EDICION ABRIL

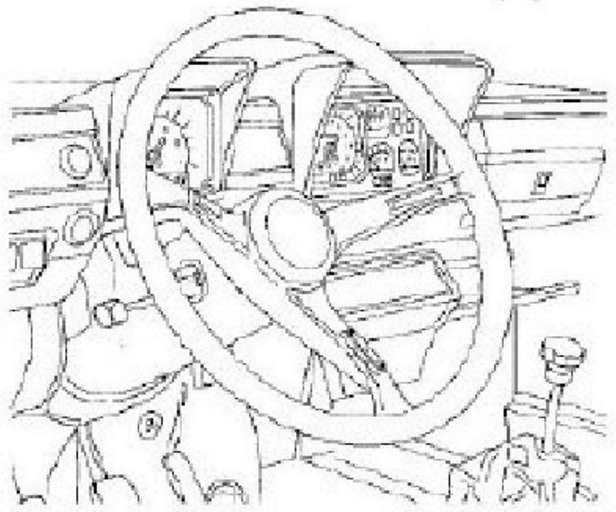

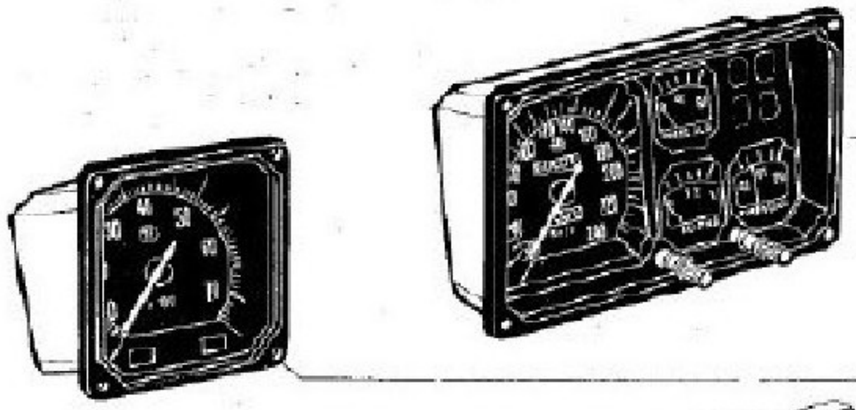

11610.64014.01

11610.64011.01

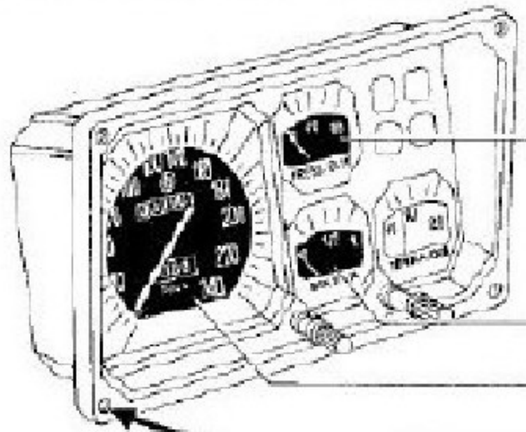

11610.64014.01/04

11610.64011.01/02

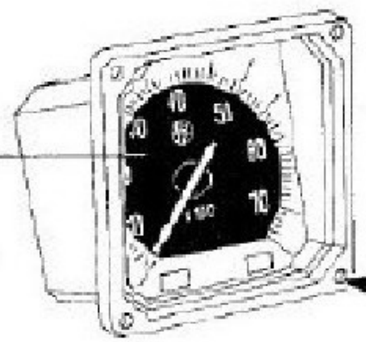

11610.64014.01/03

11610.64014.01/01

11610.63404.00

2102.16222

11610.64500.27

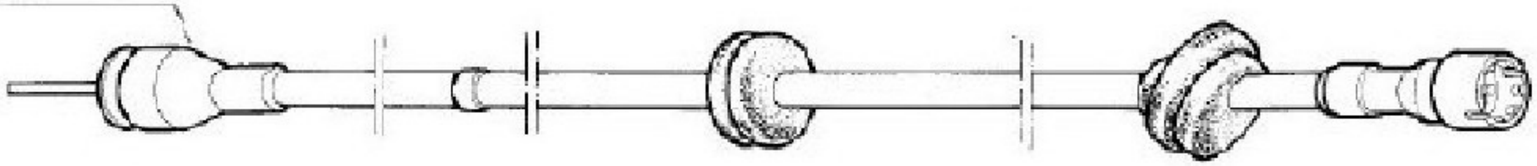

11610.64501.26

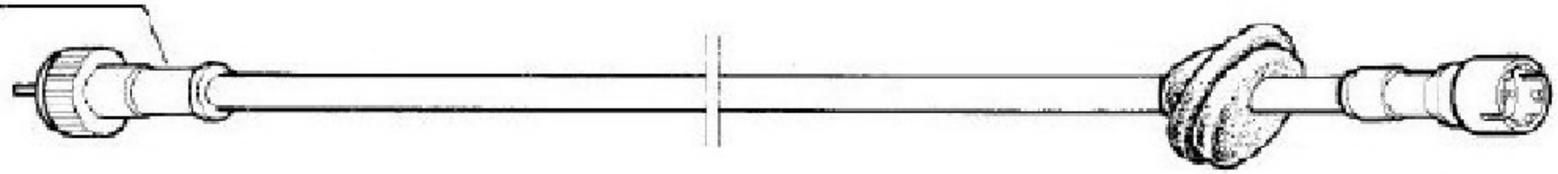

TAV. 62.20/0

APPARECCHI - JAEGER
APPAREILLAGE DE BORD
INSTRUMENTS
INSTRUMENTE
INSTRUMENTOS

MODIFICA	N. ORDINAZIONE	QT	DENOMINAZIONE	DESIGNATION	DESCRIPTION	BENENNUNG	DENOMINACIONES
	2102.16222	8	VITE	VIS	SCREW	SCHRAUBE	TORNILLO
	11610.63404.00	8	BLOCCHETTO	TAQUET	PAD	SPANNSTUECK	MULETILLA
	11610.64011.01	1	CONTAGIRI	COMPTE-TOURS	TACHOMETER	DREHZAHLMESSER	CUENTARREVOLUCIONES
	11610.64011.01/02	1	CONTAGIRI	COMPTE-TOURS	TACHOMETER	DREHZAHLMESSER	CUENTARREVOLUCIONES
	11610.64014.01	1	APPARECCHIO COMPL.	COMBINE	INSTRUMENT	APPARAT	INSTRUMENTO
	11610.64014.01/01	1	CONTACHILOMETRI	COMPTEUR KILOMETRIQU	SPEEDOMETER	KILOMETERZAEHLER	CUENTAQUILOMETROS
	11610.64014.01/03	1	INDICATORE LIVELLO	INDICATEUR DE NIVEAU	LEVEL GAUGE	GEBER	INDICADOR NIVEL
	11610.64014.01/04	1	MANOMETRO OLIO	MANOMETRE	PRESSURE GAUGE	MANOMETER	MANOMETRO
	11610.64500.27	1	FLESSIBILE CONTACH.	CABLE	WIRE	ZUGDRAHT	BOWDEN
	11610.64501.26	1	FLESSIBILE CONTAGIRI	CABLE	WIRE	ZUGDRAHT	BOWDEN

MOBILETTO SUL TEGOLO
CONSOLE DE TABLEAU DE BORD
CONSOLE
KONSOLE
CONSOLA SOBRE EL TUNEL

TAV. 62.30

1ª	EDIZIONE	1974	APRILE	
1ère	EDITION		AVRIL	
1st	EDITION		APRIL	
1ª	ASSOAISE		APRIL	
1ra	EDICION		ABRIL	

DATA AGGIORNAMENTO

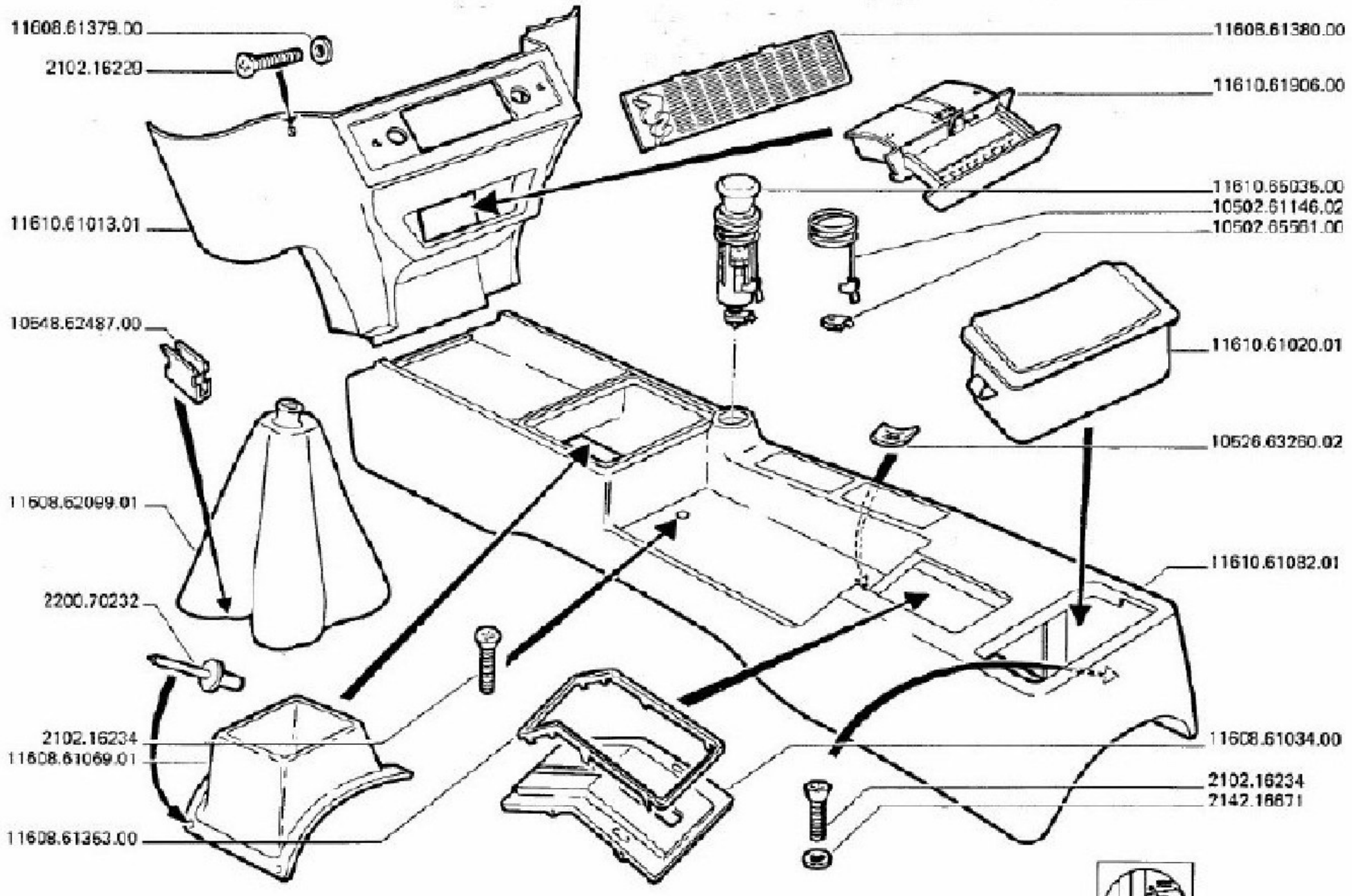

N. 6930

Alfetta GT

TAV. 62.50/0

MOBILETTO SUL TEGOLO
CONSOLE DE TABLEAU DE BORD
CONSOLE
KONSOLE
CONSOLA SOBRE EL TUNEL

MODIFICA	N. ORDINAZIONE	QT.	DENOMINAZIONE	DÉSIGNATION	DESCRIPTION	BENENNUNG	DENOMINACIONES
	2102.16229	2	VITE	VIS	SCREW	SCHRAUBE	TORNILLO
	2102.16234	2	VITE	VIS	SCREW	SCHRAUBE	TORNILLO
	2142.16671	1	RONDELLA	RONDELLE	WASHER	SCHEIBE	ARANDELLA
	2200.70232	4	RIVETTO	RIVET	RIVET	NIET	RIVETE
	10502.61146.02	1	MOLLA	RESSORT	SPRING	FEDER	MUELLE
	10502.65561.02	1	PROTEZIONE	PROTECTEUR	PROTECTION	SCHUTZ	PROTECCION
	10526.63260.02	6	MOLLETTA	AGRAFE	CLIP	KLEMMSTUECK	MUELLECITO
	10548.62487.00	12	GRAFFA	CLIP	CLIP	SCHELLE	ABRAZADERA
	11608.61034.00	1	PROTEZIONE	PROTECTEUR	PROTECTION	SCHUTZ	PROTECCION
	11608.61069.01	1	SOFFIETTO	SOUFFLET	BELLOWS	BALG	FUELLE
	11608.61353.00	1	PROFILATO	ENJOLIVEUR	MOULDING	PROFIL	PERFIL
	11608.61379.00	2	RONDELLA	RONDELLE	WASHER	SCHEIBE	ARANDELLA
	11608.61380.00	1	MOSTRINA	MOTIF	ORNAMENT	ZIERUNTERLAGE	DISTINTIVO
	11608.62099.01	1	PROTEZIONE	PROTECTEUR	PROTECTION	SCHUTZ	PROTECCION
	11610.61013.01	1	MOBILETTO PORTARADIO	CONSOLE	CONSOLE	KONSOLE	CONSOLA
	11610.61020.01	1	PORTACENERE	CENDRIER	ASH TRAY	ASCHENBECHER	CENICERO
	11610.61082.01	1	MOBILETTO	CONSOLE	CONSOLE	KONSOLE	CONSOLA
	11610.61906.00	1	PORTACENERE	CENDRIER	ASH TRAY	ASCHENBECHER	CENICERO
	11610.65035.00	1	ACCENDISIGARI	ALLUME-CIGARE	CIGAR LIGHTER	ZIGARRENANZUENDER	ENCENDEDOR

PARAURTI ANTERIORE
PARE-CHOCS AVANT
FRONT BUMPER
VORDER STOSSFAENGER
PARACHOQUES ANTERIOR

TAV. 83.00

1°	EDIZIONE	1974	APRILE
1ère	EDITION		AVRIL
1st	EDITION		APRIL
1ª	EDICION		ABRIL

DATA ESTRAZIONE ACCESSORI

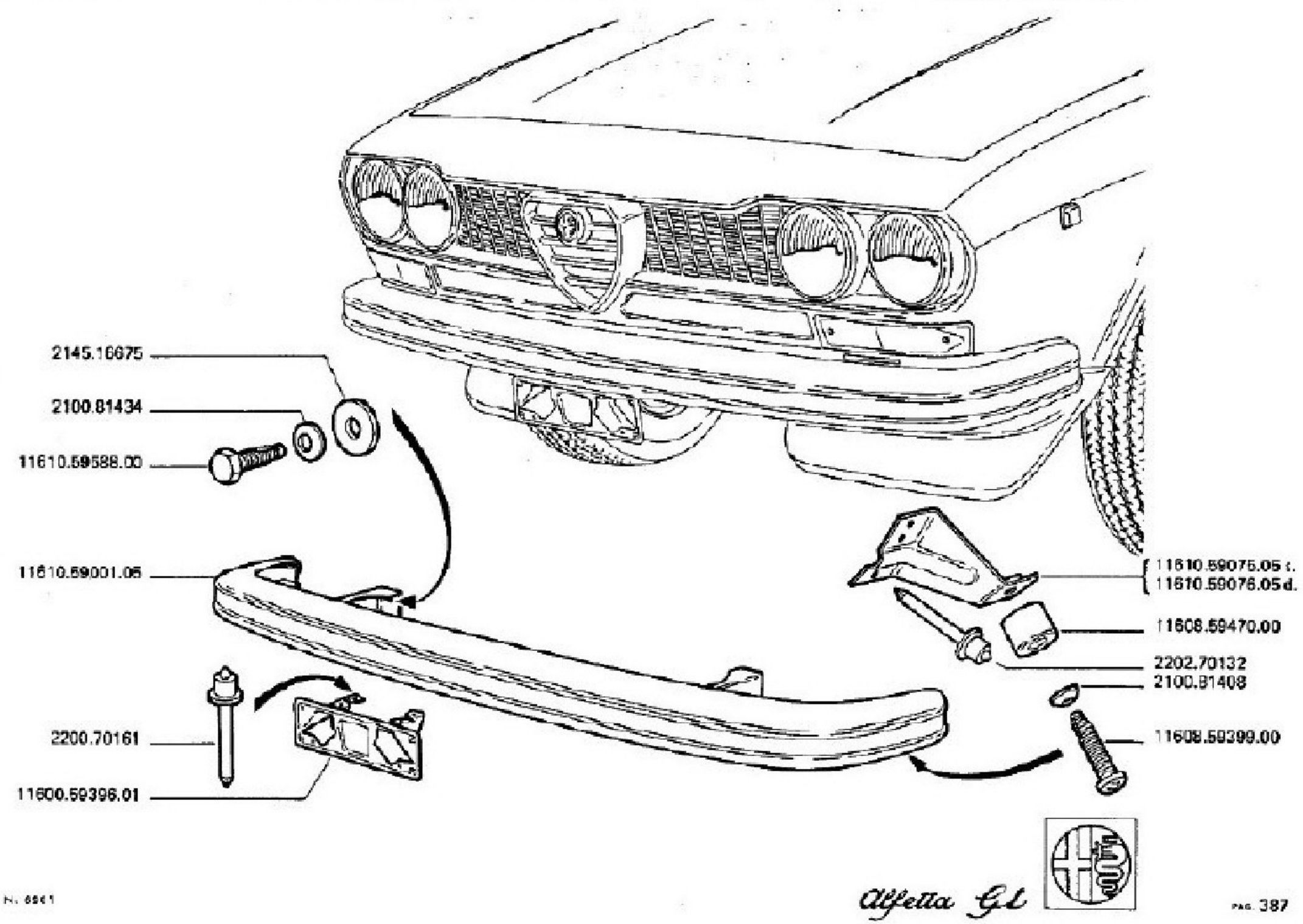

TAV. 63.00/0

PARAURTI ANTERIORE
PARE-CHOCS AVANT
FRONT BUMPER
VORDER STOSSFAENGER
PARACHOQUES ANTERIOR

MODIFICA	N. ORDINAZIONE	QT.	DENOMINAZIONE	DESIGNATION	DESCRIPTION	BENENNUNG	DENOMINACION
	2100.01408	2	RONDELLA	RONDELLE	WASHER	SCHEIBE	ARANDELLA
	2100.81434	2	RONDELLA	RONDELLE	WASHER	SCHEIBE	ARANDELLA
	2145.16675	2	RONDELLA	RONDELLE	WASHER	SCHEIBE	ARANDELLA
	2200.70161	4	RIVETTO	RIVET	RIVET	NIET	RIVETE
	2202.70132	6	RIVETTO	RIVET	RIVET	NIET	RIVETE
	11600.59396.01	1	PORTATARGA	SUPPORT PLAQUE POLIC	NUMBER PLATE HOLDER	KENNZEICHENBLENDE	PORTAMATRICULA
	11608.59399.00	2	VITE	VIS	SCREW	SCHRAUBE	TORNILLO
	11608.59470.00	2	DISTANZIALE	ENTRETOISE	SPACER	ABSTANDSTUECK	SEPARADOR
	11610.59001.05	1	PARAURTI COMPL.	PARE-CHOCS	BUMPER	STOSSFAENGER	PARACHOQUES
	11610.59075.05	1	STAFFA S.	ETRIER-SUPPORT	BRACKET	HALTERBUEGEL	ESTRIBO
	11610.59076.05	1	STAFFA D.	ETRIER-SUPPORT	BRACKET	HALTERBUEGEL	ESTRIBO
	11610.59588.00	2	VITE	VIS	SCREW	SCHRAUBE	TORNILLO

PARAURTI POSTERIORE
PARE-CHOCS ARRIÈRE
REAR BUMPER
HINTERE STOSSFÄNGER
PARACHOQUES POSTERIOR

TAV. 63.10

1	EDIZIONE	1974	APRILE
	EDITION		AVRIL
	EDITION		APRIL
	AUSGABE		APRIL
	EDICION		ABRIL

DATA DELL'ULTIMO AGGIORNAMENTO

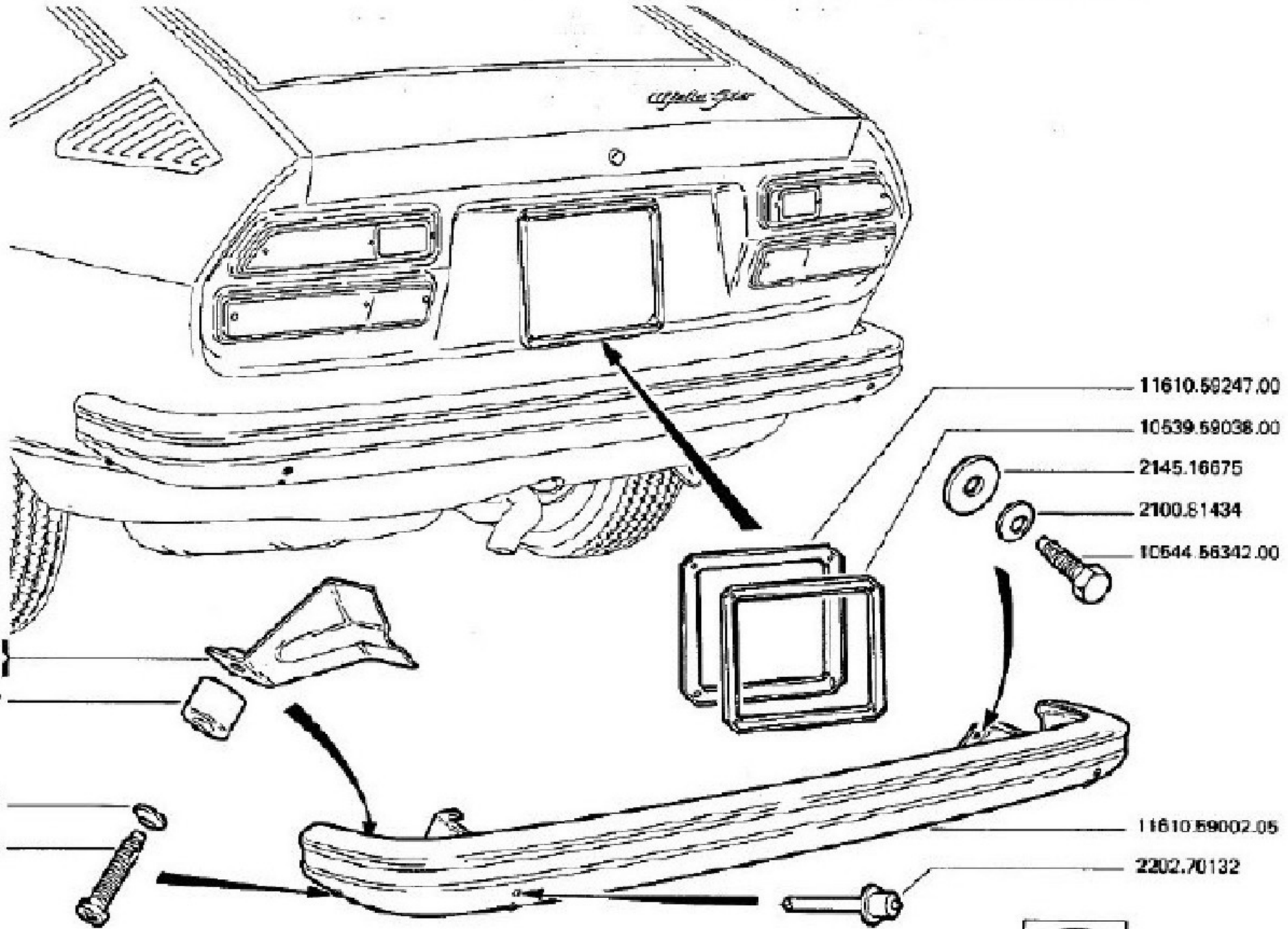

N. 6955

Alfetta GT

TAV. 63.1070

PARAURTI POSTERIORE
PARE-CHOCS ARRIERE
REAR BUMPER
HINTERE STOSSFAENGER
PARACHOQUES POSTERIOR

NOSTRA	N. ORDINAZIONE	QT.	DENOMINAZIONE	DESIGNATION	DESCRIPTION	BENENNUNG	DENOMINACIONES
	2100.81408	2	RONDELLA	RONDELLE	WASHER	SCHEIBE	ARANDELLA
	2100.81434	4	RONDELLA	RONDELLE	WASHER	SCHEIBE	ARANDELLA
	2145.16675	4	RONDELLA	RONDELLE	WASHER	SCHEIBE	ARANDELLA
	2202.70132	6	RIVETTO	RIVET	RIVET	NIET	RIVETE
	10539.59038.00	1	CORNICE TARGA	MONTURE	FRAME	RAHMEN	MARCO
	10544.56342.00	4	VITE	VIS	SCREW	SCHRAUBE	TORNILLO
	11608.59399.00	2	VITE	VIS	SCREW	SCHRAUBE	TORNILLO
	11608.59470.00	2	DISTANZIALE	ENTRETOISE	SPACER	ABSTANDSTUECK	SEPARADOR
	11610.59002.05	1	PARAURTI COMPL.	PARE-CHOCS	BUMPER	STOSSFAENGER	PARACHOQUES
	11610.59077.05	1	STAFFA S.	ETRIER-SUPPORT	BRACKET	HALTERBUEGEL	ESTRIBO
	11610.59078.05	1	STAFFA D.	ETRIER-SUPPORT	BRACKET	HALTERBUEGEL	ESTRIBO
	11610.59247.00	1	PORTATARGA	SUPPORT PLAQUE POLIC	NUMBER PLATE HOLDER	KENNZEICHENBLENDE	PORTAMATRICULA

FREGI E PROFILATI ESTERNI
ENJOLIVEURS ET PROFILS EXTERIEURS
EXTERNAL MOULDINGS AND ORNAMENTS
ÄUSSERE ZIERBESCHLÄGE
ADORNOS Y PERFILES EXTERNOS

TAV. 63.20

1	EDIZIONE	1974	APRILE
	EDITION		AVRIL
	EDITION		APRIL
	AUSGABE		APRIL
	EDICION		ABRIL

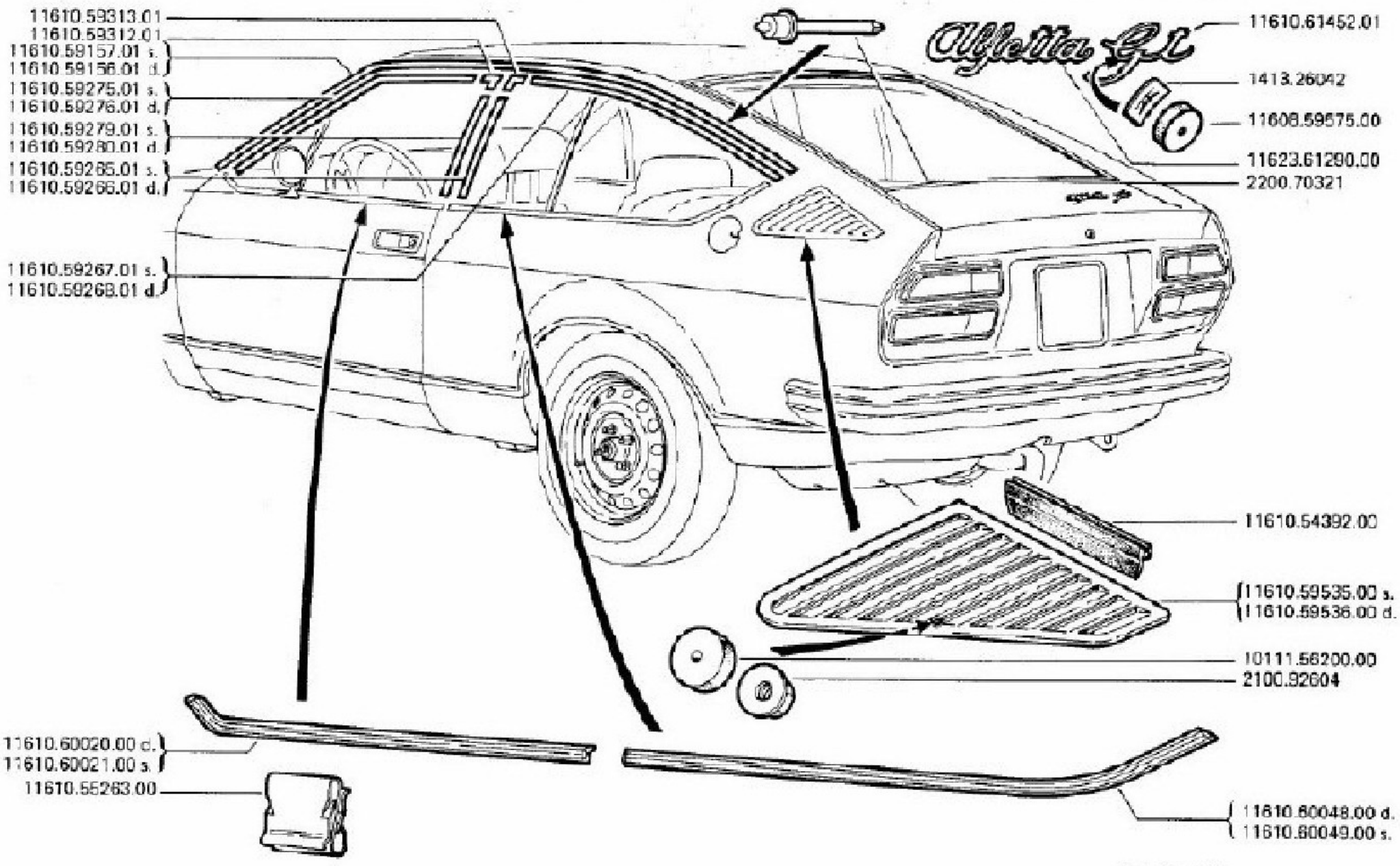

N. 6900

Alfetta GT

TAV. 65.2040

FREGI E PROFILATI ESTERNI
ENJOLIVEURS ET PROFILS EXTERIEURS
EXTERNAL MOULDINGS AND ORNAMENTS
AEUSSERE ZIERBESCHLAGE
ADORNOS Y PERFILES EXTERNOS

MODIFICA	N. ORDINAZIONE	QT	DENOMINAZIONE	DESIGNATION	DESCRIPTION	BENENNUNG	DENOMINACION
	1413.26042	6	MOLLETTA	AGRAFE	CLIP	KLEMMSTUECK	MUELLECITO
	2100.92604	6	DADO	ECROU	NUT	MUTTER	TUERCA
	2200.70321	4	RIVETTO	RIVET	RIVET	NIET	RIVETE
	10111.56200.00	6	GUARNIZIONE	JOINT D ETANCHEITE	SEAL	DICHTUNG	GUARNICION
	11608.59575.00	6	GUARNIZIONE	JOINT D ETANCHEITE	SEAL	DICHTUNG	GUARNICION
	11610.54392.00	2	PROFILATO	ENJOLIVEUR	MOULDING	PROFIL	PERFIL
	11610.55263.00	28	MOLLETTA	AGRAFE	CLIP	KLEMMSTUECK	MUELLECITO
	11610.59156.01	1	PROFILATO GOCCIOL.D.	ENJOLIVEUR	MOULDING	PROFIL	PERFIL
	11610.59157.01	1	PROFILATO GOCCIOL.S.	ENJOLIVEUR	MOULDING	PROFIL	PERFIL
	11610.59265.01	1	CORNICE POST.S.	PROFIL ENTOURAGE	LOWER MOULDING	ZIERRAHMEN	MARCO
	11610.59266.01	1	CORNICE POST.D.	PROFIL ENTOURAGE	LOWER MOULDING	ZIERRAHMEN	MARCO
	11610.59267.01	1	CORNICE POST.S.	PROFIL ENTOURAGE	LOWER MOULDING	ZIERRAHMEN	MARCO
	11610.59268.01	1	CORNICE POST.D.	PROFIL ENTOURAGE	LOWER MOULDING	ZIERRAHMEN	MARCO
	11610.59275.01	1	CORNICE PORTA S.	PROFIL ENTOURAGE	LOWER MOULDING	ZIERRAHMEN	MARCO
	11610.59276.01	1	CORNICE PORTA D.	PROFIL ENTOURAGE	LOWER MOULDING	ZIERRAHMEN	MARCO
	11610.59279.01	1	CORNICE PORTA S.	PROFIL ENTOURAGE	LOWER MOULDING	ZIERRAHMEN	MARCO
	11610.59280.01	1	CORNICE PORTA D.	PROFIL ENTOURAGE	LOWER MOULDING	ZIERRAHMEN	MARCO
	11610.59312.01	2	COPRIGIUNTO	COUVRE-JOINT	BUMP STRAP	FUGENABDECKUNG	CUBREJUNTO
	11610.59313.01	2	COPRIGIUNTO	COUVRE-JOINT	BUMP STRAP	FUGENABDECKUNG	CUBREJUNTO
	11610.59535.00	1	MASCHERINA S.	CALANDRE	GRILLE	KUEHLERSCHUTZGITTER	CALANDRA
	11610.59536.00	1	MASCHERINA D.	CALANDRE	GRILLE	KUEHLERSCHUTZGITTER	CALANDRA

FREGI E PROFILATI ESTERNI
ENJOLIVEURS ET PROFILS EXTERIEURS
EXTERNAL MOULDINGS AND ORNAMENTS
ÄUSSERE ZIERBESCHLÄGE
ADORNOS Y PERFILES EXTERNOS

TAV. 63.20

1ª	EDIZIONE	1974	APRILE
1st	EDITION		APRIL
1e	EDITION		APRIL
1.	AUSGABE		APRIL
1ra	EDICION		ABRIL

DATA DI LIVELLO AGGIORNAMENTO

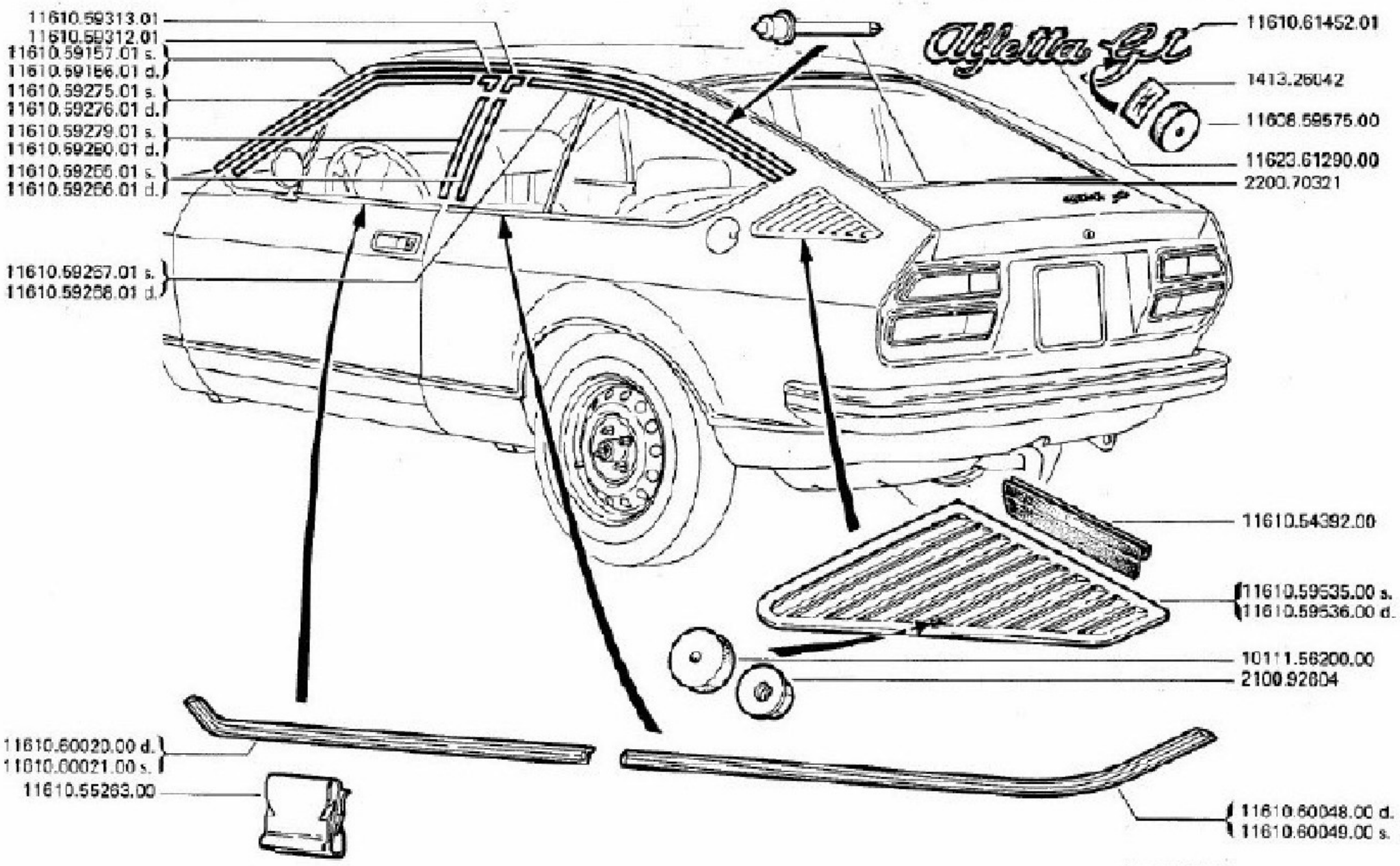

TAV. 63.2070

FREGI E PROFILATI ESTERNI
ENJOLIVEURS ET PROFILS EXTERIEURS
EXTERNAL MOULDINGS AND ORNAMENTS
AEUSSERE ZIERBESCHLÄGE
ADORNOS Y PERFILES EXTERNOS

MODIFICA	N. ORDINAZIONE	QT.	DENOMINAZIONE	DESIGNATION	DESCRIPTION	BENENNUNG	DENOMINACIONES
	11610.60020.00	1	CORNICE PORTA D.	PROFIL ENTOURAGE	LOWER MOULDING	ZIERRAHMEN	MARCO
	11610.60021.00	1	CORNICE PORTA S.	PROFIL ENTOURAGE	LOWER MOULDING	ZIERRAHMEN	MARCO
	11610.60048.00	1	CORNICE POST.D.	PROFIL ENTOURAGE	LOWER MOULDING	ZIERRAHMEN	MARCO
	11610.60049.00	1	CORNICE POST.S.	PROFIL ENTOURAGE	LOWER MOULDING	ZIERRAHMEN	MARCO
	11610.61452.01	1	SCRITTA GT	MONOGRAMME	EMBLEM	SCHRIFTZUG	INSCRIPCION
	11623.61290.00	1	SCRITTA ALFETTA	MONOGRAMME	EMBLEM	SCHRIFTZUG	INSCRIPCION

FREGI E PROFILATI ESTERNI
ENJOLIVEURS ET PROFILS EXTERIEURS
EXTERNAL MOULDINGS AND ORNAMENTS
ÄUSSERE ZIERBESCHLÄGE
ADORNOS Y PERFILES EXTERNOS

TAV. 63.20/1

1ª	EDIZIONE	1974	APRILE
1st	EDITION		AVRIL
1.	EDITION		APRIL
1.	AUSGABE		APRIL
1ra	EDICION		ABRIL

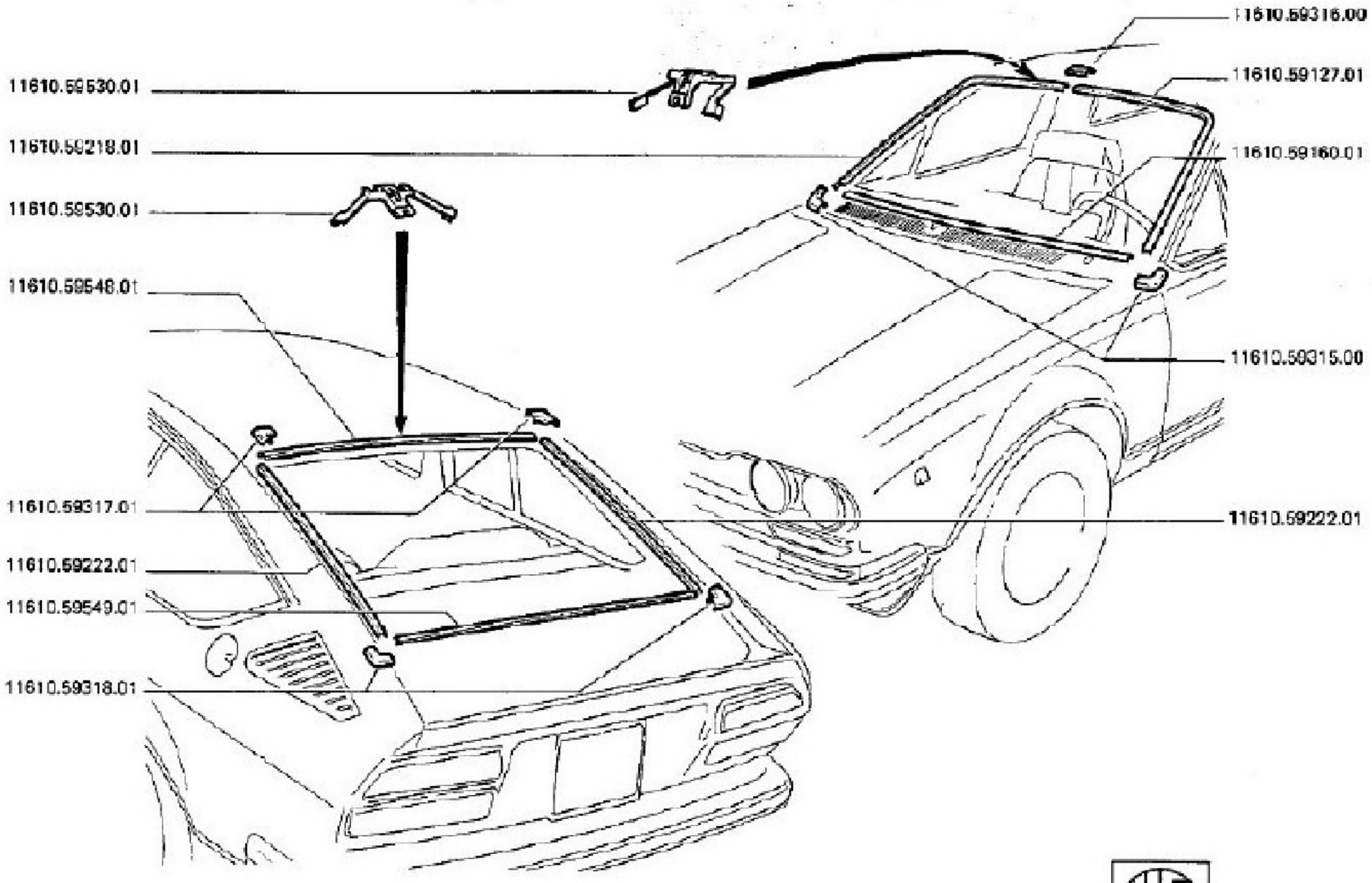

n. 9878

TAV. 63.20/1

FREGI E PROFILATI ESTERNI
ENJOLIVEURS ET PROFILS EXTERIEURS
EXTERNAL MOULDINGS AND ORNAMENTS
AEUSSERE ZIERBESCHLAGE
ADORNOS Y PERFILES EXTERNOS

MODIFICA	N. ORDINAZIONE	QT.	DENOMINAZIONE	DESIGNATION	DESCRIPTION	BENENNUNG	DENOMINACIONES
	11610.59160.01	1	PROFIL.PARAB.INF.	ENJOLIVEUR	MOULDING	PROFIL	PERFIL
	11610.59217.01	1	PROFIL.PARAB.LAT.S.	ENJOLIVEUR	MOULDING	PROFIL	PERFIL
	11610.59218.01	1	PROFIL.PARAB.LAT.D.	ENJOLIVEUR	MOULDING	PROFIL	PERFIL
	11610.59222.01	2	PROFIL.LUNOT.LAT.	ENJOLIVEUR	MOULDING	PROFIL	PERFIL
	11610.59315.00	2	COPRIG.INF.PARAB.	COUVRE-JOINT	BUMP STRAP	FUGENABDECKUNG	CUBREJUNTO
	11610.59316.00	1	COPRIG.SUP.PARAB.	COUVRE-JOINT	BUMP STRAP	FUGENABDECKUNG	CUBREJUNTO
	11610.59317.01	2	COPRIG.SUP.LUNOT.	COUVRE-JOINT	BUMP STRAP	FUGENABDECKUNG	CUBREJUNTO
	11610.59318.01	2	COPRIG.INF.LUNOT.	COUVRE-JOINT	BUMP STRAP	FUGENABDECKUNG	CUBREJUNTO
	11610.59530.01	39	MOLLETTA	AGRAFE	CLIP	KLEMMSTUECK	MUELLECITO
	11610.59548.01	1	PROFIL.SUP.LUNOT.	ENJOLIVEUR	MOULDING	PROFIL	PERFIL
	11610.59549.01	1	PROFIL.INF.LUNOT.	ENJOLIVEUR	MOULDING	PROFIL	PERFIL

MASCHERA RADIATORE E PRESA ARIA
CALANDRE DE RADIATEUR ET PRISES D'AIR
RADIATOR GRILLE AND AIR INTAKES
KÜHLERSCHUTZGITTER UND LUFTEINLÄSSE
CALANDRA RADIATOR Y TOMA AIRE

TAV. 63.30

1	1ª EDIZIONE	1974	APRILE	DATA DI STAMPA AGGIORNAMENTO
	1st EDITION		APRIL	
	1st EDITION		APRIL	
	AUSGABE		APRIL	
	1ère EDITION		AVRIL	

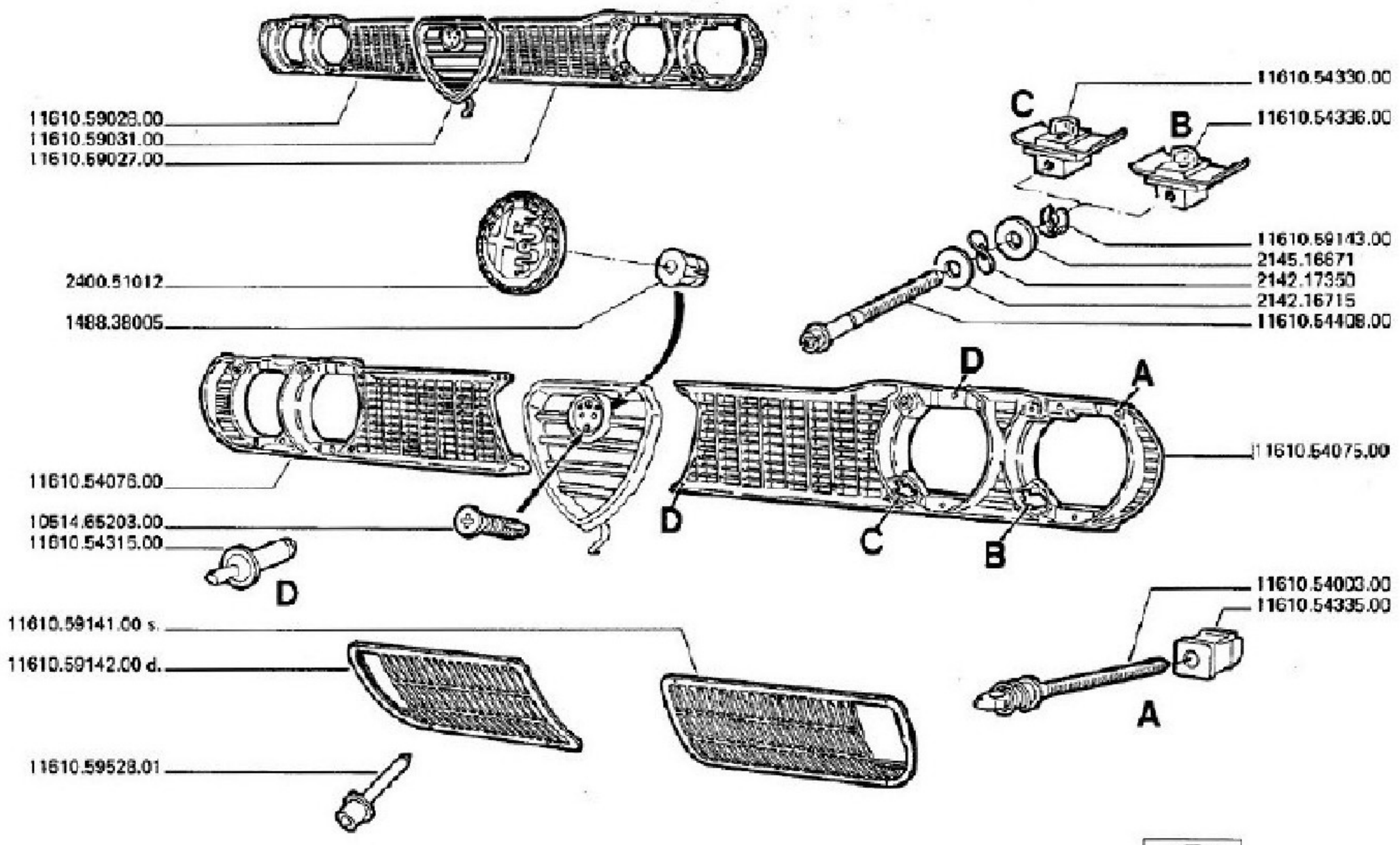

TAV. 63.30/0

MASCHERA RADIATORE E PRESA ARIA
CALANDRE DE RADIATEUR ET PRISES D AIR
RADIATOR GRILLE AND AIR INTAKES
KUHLERSCHUTZGITTER UND LUFTEINLAESSE
CALANDRA RADIATOR Y TOMA AIRE

MODIFICA	N. ORDINAZIONE	QT.	DENOMINAZIONE	DÉSIGNATION	DESCRIPTION	BENENNUNG	DENOMINACIONES
	1488.38005	2	MOLLETTA	AGRAFE	CLIP	KLEMMSTUECK	MUELLECITO
	2142.16715	4	RONDELLA	RONDELLE	WASHER	SCHEIBE	ARANDELLA
	2142.17350	4	RONDELLA	RONDELLE	WASHER	SCHEIBE	ARANDELLA
	2145.16671	4	RONDELLA	RONDELLE	WASHER	SCHEIBE	ARANDELLA
	2400.51012	1	DISTINTIVO	ECUSSON	BADGE	ABZEICHEN	DISTINTIVO
	10514.65203.00	1	VITE	VIS	SCREW	SCHRAUBE	TORNILLO
	11610.54003.00	2	VITE REGOLAZIONE	VIS	SCREW	SCHRAUBE	TORNILLO
	11610.54075.00	1	CONTENITORE S.	SUPPORT	RETAINER	BEHAELTER	ENVASE
	11610.54076.00	1	CONTENITORE D.	SUPPORT	RETAINER	BEHAELTER	ENVASE
	11610.54315.00	12	RIVETTO	RIVET	RIVET	NIET	RIVETE
	11610.54330.00	2	BLOCCHETTO	TAQUET	PAD	SPANNSTUECK	MULETILLA
	11610.54335.00	8	BLOCCHETTO	TAQUET	PAD	SPANNSTUECK	MULETILLA
	11610.54336.00	2	BLOCCHETTO	TAQUET	PAD	SPANNSTUECK	MULETILLA
	11610.54408.00	4	VITE REGOLAZIONE	VIS	SCREW	SCHRAUBE	TORNILLO
	11610.59027.00	1	PRESA ARIA S.	PRISE D AIR	AIR INTAKE	LUFTEINLASS	TOMA DE AIRE
	11610.59028.00	1	PRESA ARIA D.	PRISE D AIR	AIR INTAKE	LUFTEINLASS	TOMA DE AIRE
	11610.59031.00	1	MASCHERA RADIATORE	CALANDRE	GRILLE	KUEHLERSCHUTZGITTER	CALANDRA
	11610.59141.00	1	GRIGLIA S.	GRILLE PRISE AIR	GRILLE	GITTER	REJILLA
	11610.59142.00	1	GRIGLIA D.	GRILLE PRISE AIR	GRILLE	GITTER	REJILLA
	11610.59528.01	10	RIVETTO	RIVET	RIVET	NIET	RIVETE

1ª EDIZIONE 1974 APRILE
1re EDITION AVRIL
1st EDITION APRIL
1. AUSGABE APRIL
1ra EDICION ABRIL

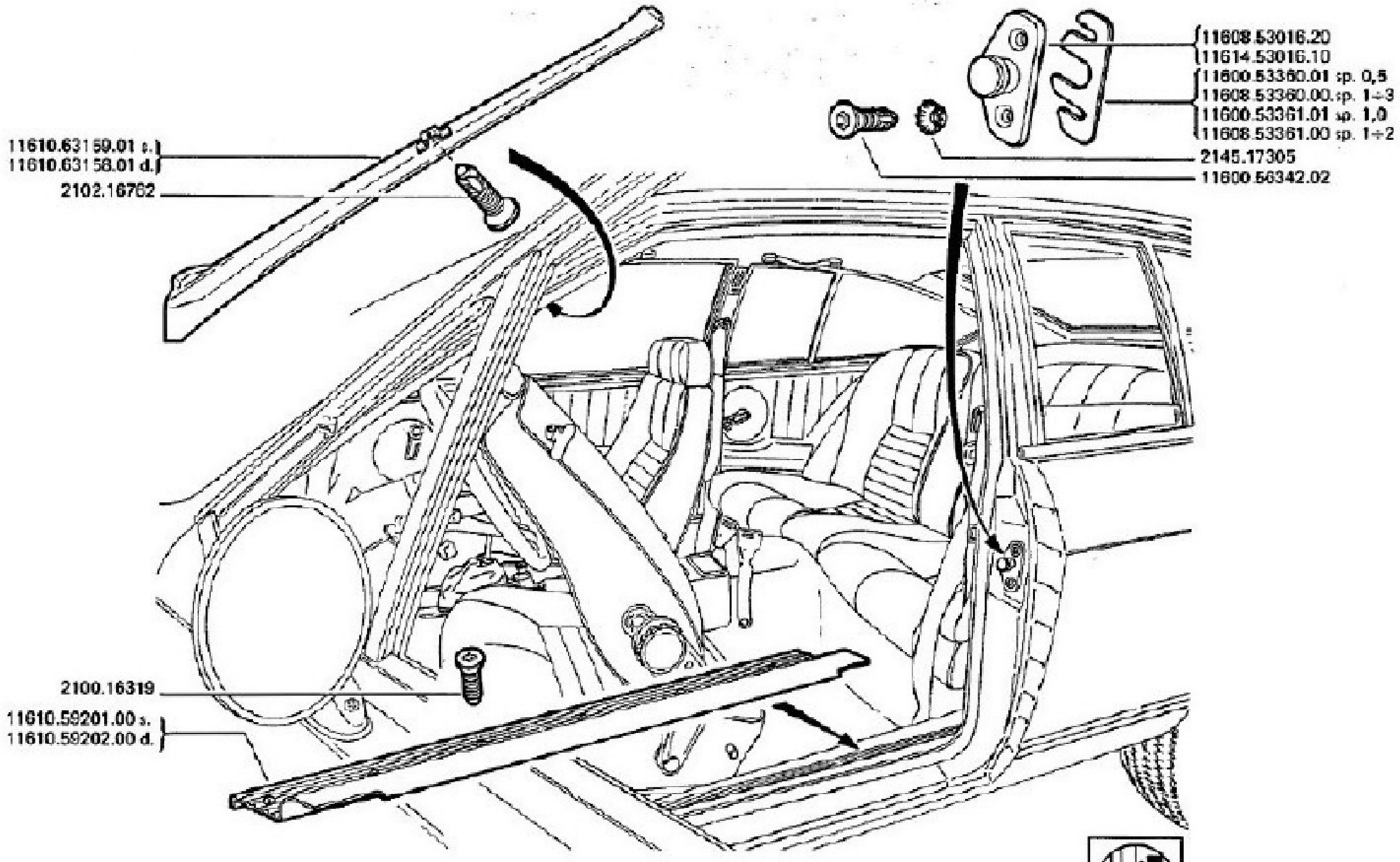

TAV. 64.00/0

PARTICOLARI INTERNI DELLA CARROZZERIA
ACCESSOIRES INTERIEURS DE CARROSSERIE
INTERNAL DETAILS
INNENEINRICHTUNG
PARTICULARES INTERIORES CARROCERIA

MODIFICA	N. ORDINAZIONE	QT	DENOMINAZIONE	DÉSIGNATION	DESCRIPTION	BENENNUNG	DENOMINACIONES
	2100.16319	12	VITE	VIS	SCREW	SCHRAUBE	TORNILLO
	2102.16762	2	VITE	VIS	SCREW	SCHRAUBE	TORNILLO
	2145.17305	4	RONDELLA	RONDELLE	WASHER	SCHEIBE	ARANDELLA
	11600.53360.01	0	SPESSORE +0,5	CALE	SPACER	BEILAGE	ESPESOR
	11600.53361.01	0	SPESSORE +1,0	CALE	SPACER	BEILAGE	ESPESOR
	11600.56342.02	4	VITE	VIS	SCREW	SCHRAUBE	TORNILLO
	11608.53016.20	2	RISCONTRO SESSA	GACHE DE PORTE	STRIKER	ANSCHLAG	CERRADERO
	11608.53360.00	0	SPESSORE +1 - +3	CALE	SPACER	BEILAGE	ESPESOR
	11608.53361.00	0	SPESSORE +1 = +3	CALE	SPACER	BEILAGE	ESPESOR
	11610.59201.00	1	BATTICALCAGNO S.	BAS DE CAISSE	SILL	EINSTIEGSCHWELLER	APOYAPIE
	11610.59202.00	1	BATTICALCAGNO D.	BAS DE CAISSE	SILL	EINSTIEGSCHWELLER	APOYAPIE
	11610.63158.01	1	FINIZIONE LAT.D.	FINITION	PILLAR TRIM	INNENVERKLEIDUNG	REMACHE
	11610.63159.01	1	FINIZIONE LAT.S.	FINITION	PILLAR TRIM	INNENVERKLEIDUNG	REMACHE
	11614.53016.10	2	RISCONTRO SAFE	GACHE DE PORTE	STRIKER	ANSCHLAG	CERRADERO

PARTICOLARI INTERNI DELLA CARROZZERIA
ACCESSOIRES INTERIEURS DE CARROSSERIE
INTERNAL DETAILS
INNENEINRICHTUNG
PARTICULARES INTERIORES CARROCERIA

TAV. 64.00/1

1	EDIZIONE	1974	APRILE
	EDITION		AVRIL
	EDITION		APRIL
	AUSGABE		APRIL
	EDICION		ABRIL

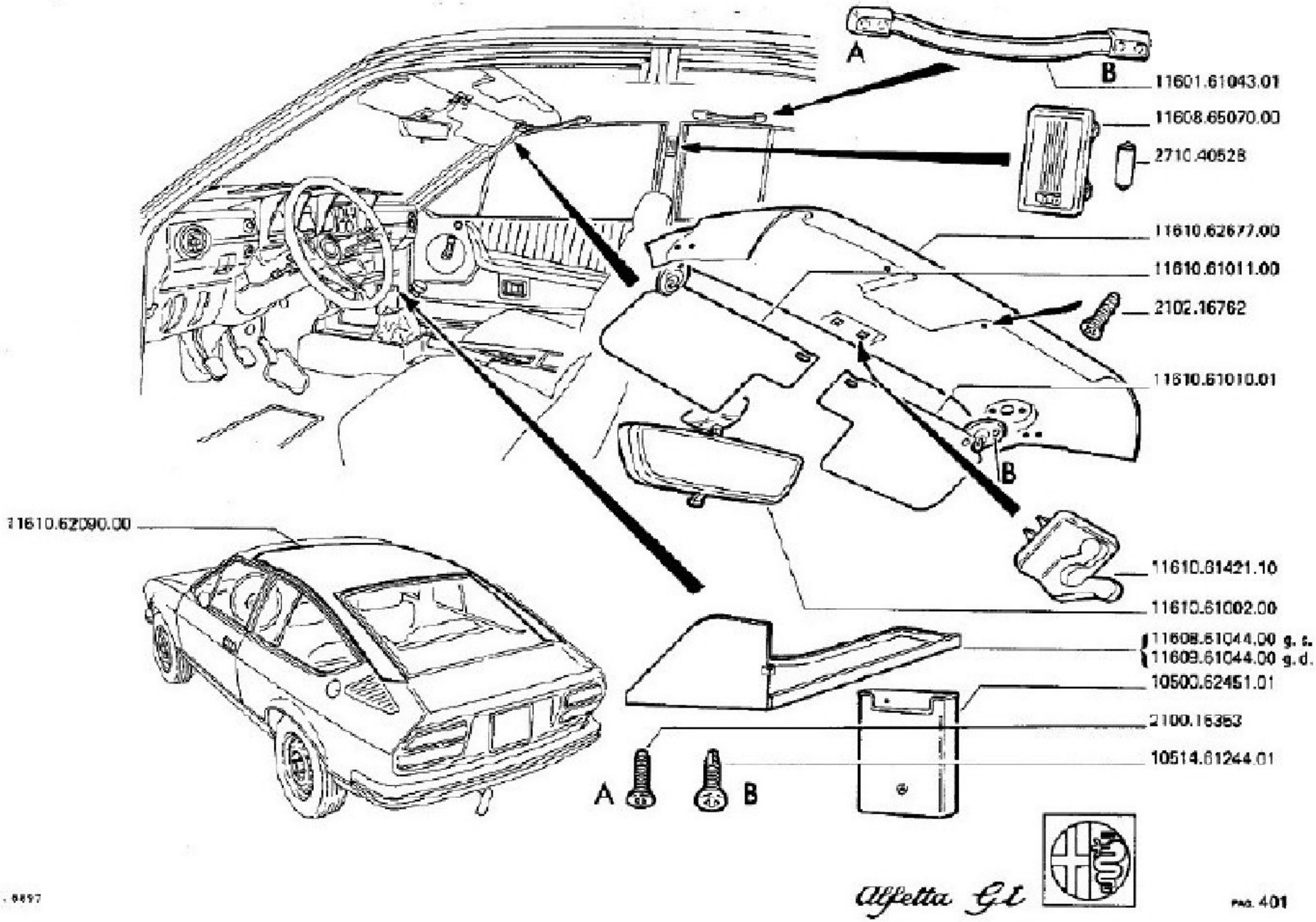

TAV. 64.0041

PARTICOLARI INTERNI DELLA CARROZZERIA
ACCESSOIRES INTERIEURS DE CARROSSERIE
INTERNAL DETAILS
INNENEINRICHTUNG
PARTICULARES INTERIORES CARROCERIA

MODIFICA	N. ORDINAZIONE	QT.	DENOMINAZIONE	DESIGNATION	DESCRIPTION	BENENNUNG	DENOMINACIONES
	2100.16353	4	VITE	VIS	SCREW	SCHRAUBE	TORNILLO
	2102.16762	6	VITE	VIS	SCREW	SCHRAUBE	TORNILLO
	2710.40528	2	LAMPADINA	AMPOULE	BULB	LAMPE	BOMBILLA
	10500.62451.01	1	TASCA TAGLIANDI	POCHE	POCKET	TASCHE	BOLSA
	10514.61244.01	8	VITE	VIS	SCREW	SCHRAUBE	TORNILLO
	11601.61043.01	3	MANIGLIA	POIGNEE	HANDLE	TUERGRIFF	MANILLA
	11608.61044.00	1	MENSOLA GD	PATTE	BRACKET	ABLAGEFACH	MENSULA
	11608.65070.00	2	PLAFONIERA	PLAFONNIERS	ROOF LIGHT	DECKENLEUCHTE	PLAFONIERA
	11609.61044.00	1	MENSOLA GD	PATTE	BRACKET	ABLAGEFACH	MENSULA
	11610.61002.00	1	SPECCHIO RETROVISORE	MIROIR RETROVISEUR	REARVIEW MIRROR	SPIEGEL	ESPEJO
	11610.61010.01	1	PARASOLE D.	PARE-SOLEIL	SUN VISOR	SONNENBLENDE	PARASOL
	11610.61011.00	1	PARASOLE S.	PARE-SOLEIL	SUN VISOR	SONNENBLENDE	PARASOL
	11610.61421.10	2	GANCIO	CROCHET	CATCH	HAKEN	GANCHO
	11610.62090.00	1	PADIGLIONE	PAVILLON	ROOF TRIM	HIMMEL	PABELLON
	11610.62677.00	1	PIASTRA	PLAQUE	PLATE	PLATTE	PLACA

1ª EDIZIONE 1974 APRILE
1re EDITION AVRIL
1st EDITION APRIL
1. AUSGABE APRIL
1ª EDICION ABRIL

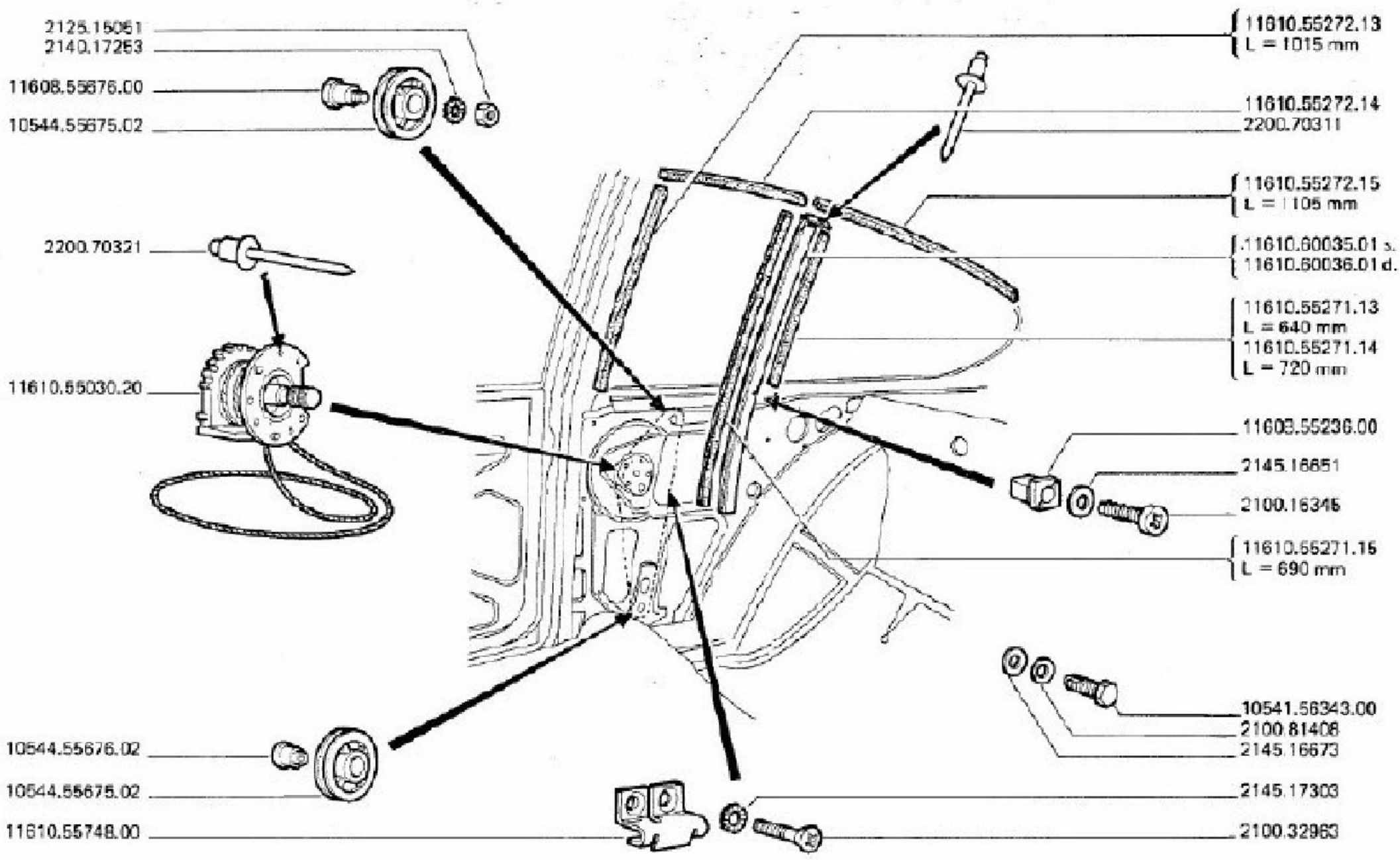

TAV. 64.00/2

PARTICOLARI INTERNI DELLA CARROZZERIA
ACCESSOIRES INTERIEURS DE CARROSSERIE
INTERNAL DETAILS
INNENEINRICHTUNG
PARTICULARES INTERIORES CARROCERIA

MODIFICA	N. ORDINAZIONE	QT.	DENOMINAZIONE	DESIGNATION	DESCRIPTION	BENENNUNG	DENOMINACION
	2100.16345	2	VITE	VIS	SCREW	SCHRAUBE	TORNILLO
	2100.32963	4	VITE	VIS	SCREW	SCHRAUBE	TORNILLO
	2100.81408	2	RONDELLA	RONDELLE	WASHER	SCHEIBE	ARANDELLA
	2140.17253	2	RONDELLA	RONDELLE	WASHER	SCHEIBE	ARANDELLA
	2145.16651	2	RONDELLA	RONDELLE	WASHER	SCHEIBE	ARANDELLA
	2145.16673	2	RONDELLA	RONDELLE	WASHER	SCHEIBE	ARANDELLA
	2145.17303	4	RONDELLA	RONDELLE	WASHER	SCHEIBE	ARANDELLA
	2200.70311	4	RIVETTO	RIVET	RIVET	NIET	RIVETE
	2200.70321	8	RIVETTO	RIVET	RIVET	NIET	RIVETE
	10541.56343.00	2	VITE	VIS	SCREW	SCHRAUBE	TORNILLO
	10544.55675.02	4	CARRUCOLA	GALET	SHEAVE	FLASCHENZUG	POLEA
	10544.55676.02	2	PERNO	AXE	PIVOT PIN	ZAPFEN	PERNO
	11600.55589.01	2	RONDELLA	RONDELLE	WASHER	SCHEIBE	ARANDELLA
	11608.55236.00	2	BOCCOLA	BAGUE	BUSHING	BUECHSE	CASQUILLO
	11608.55676.00	2	PERNO	AXE	PIVOT PIN	ZAPFEN	PERNO
	11610.55030.20	2	ALZACRISTALLO POST.	LEVE-GLACE	WINDOW REGULATOR	SCHEIBENHEBER	ALZACRISTALES
	11610.55271.13	0	PROFILATO	JOINT D ETANCHEITE	WEATHERSTRIP	DICHTUNGSRAHEN	PERFIL GOMA
	11610.55271.14	0	PROFILATO	JOINT D ETANCHEITE	WEATHERSTRIP	DICHTUNGSRAHEN	PERFIL GOMA
	11610.55271.15	0	PROFILATO	JOINT D ETANCHEITE	WEATHERSTRIP	DICHTUNGSRAHEN	PERFIL GOMA
	11610.55272.13	0	PROFILATO	JOINT D ETANCHEITE	WEATHERSTRIP	DICHTUNGSRAHEN	PERFIL GOMA
	11610.55272.14	0	PROFILATO	JOINT D ETANCHEITE	WEATHERSTRIP	DICHTUNGSRAHEN	PERFIL GOMA

PARTICOLARI INTERNI DELLA CARROZZERIA
ACCESSOIRES INTERIEURS DE CARROSSERIE
INTERNAL DETAILS
INNENEINRICHTUNG
PARTICULARES INTERIORES CARROCERIA

TAV. 64.00/2

1	EDIZIONE	1974	APRILE
	EDITION		AVRIL
	EDITION		APRIL
	AUSGABE		APRIL
	EDICION		ABRIL

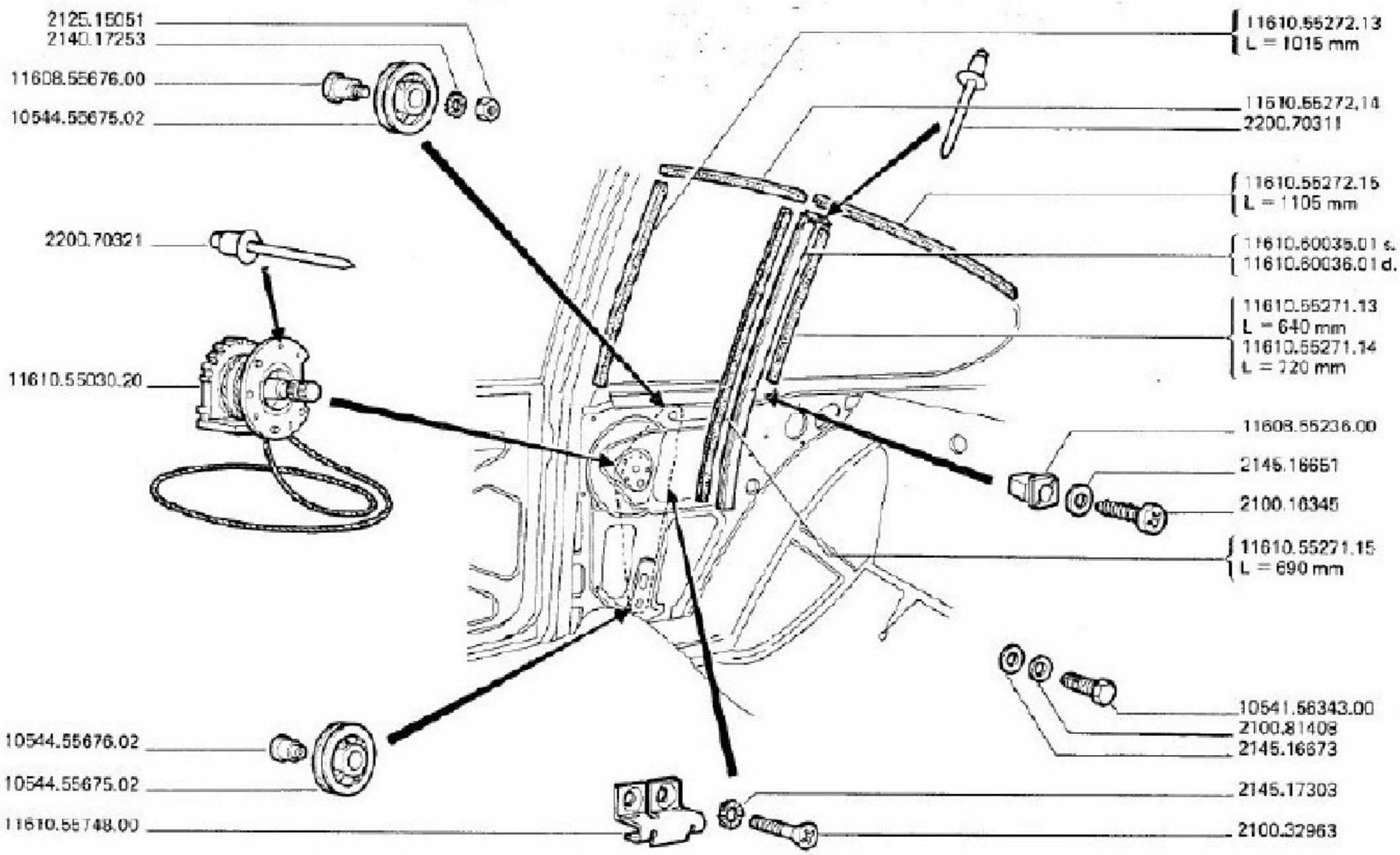

TAV. 64.00/2

PARTICOLARI INTERNI DELLA CARROZZERIA
ACCESSOIRES INTERIEURS DE CARROSSERIE
INTERNAL DETAILS
INNENEINRICHTUNG
PARTICULARES INTERIORES CARROCERIA

MODIFICA	N. DESIGNAZIONE	QT.	DENOMINAZIONE	DÉSIGNATION	DESCRIPTION	BENENNUNG	DENOMINACIONES
	11610.55272.15	0	PROFILATO	JOINT D ETANCHEITE	WEATHERSTRIP	DICHTUNGSRAMEN	PERFIL GOMA
	11610.55748.00	2	SQUADRETTA	GOUSSET	BRACKET	WINKELSTUECK	ESCUADRITA
	11610.60035.01	1	GUIDACRISTALLO S.	COULISSE DE VITRE	GLASS GUIDE	FENSTERFUEHRSCHIENE	GUIA CRISTAL
	11610.60036.01	1	GUIDACRISTALLO D.	COULISSE DE VITRE	GLASS GUIDE	FENSTERFUEHRSCHIENE	GUIA CRISTAL

CRISTALLI PORTE - PARABREZZA E FINESTRINO POSTERIORE
VITRES DE PORTES - PARE-BRISE ET LUNETTE ARRIERE
WINDHIELD, SIDE AND REAR WINDOWS
VERGLASUNG
CRISTALES PUERTAS - PARABRISAS Y VENTANILLA POSTERIOR

TAV. 65.00

1°	EDIZIONE	1974	APRILE
1ère	EDITION		APRIL
1st	EDITION		APRIL
1.	AUSGABE		APRIL
1ra	EDICION		ABRIL

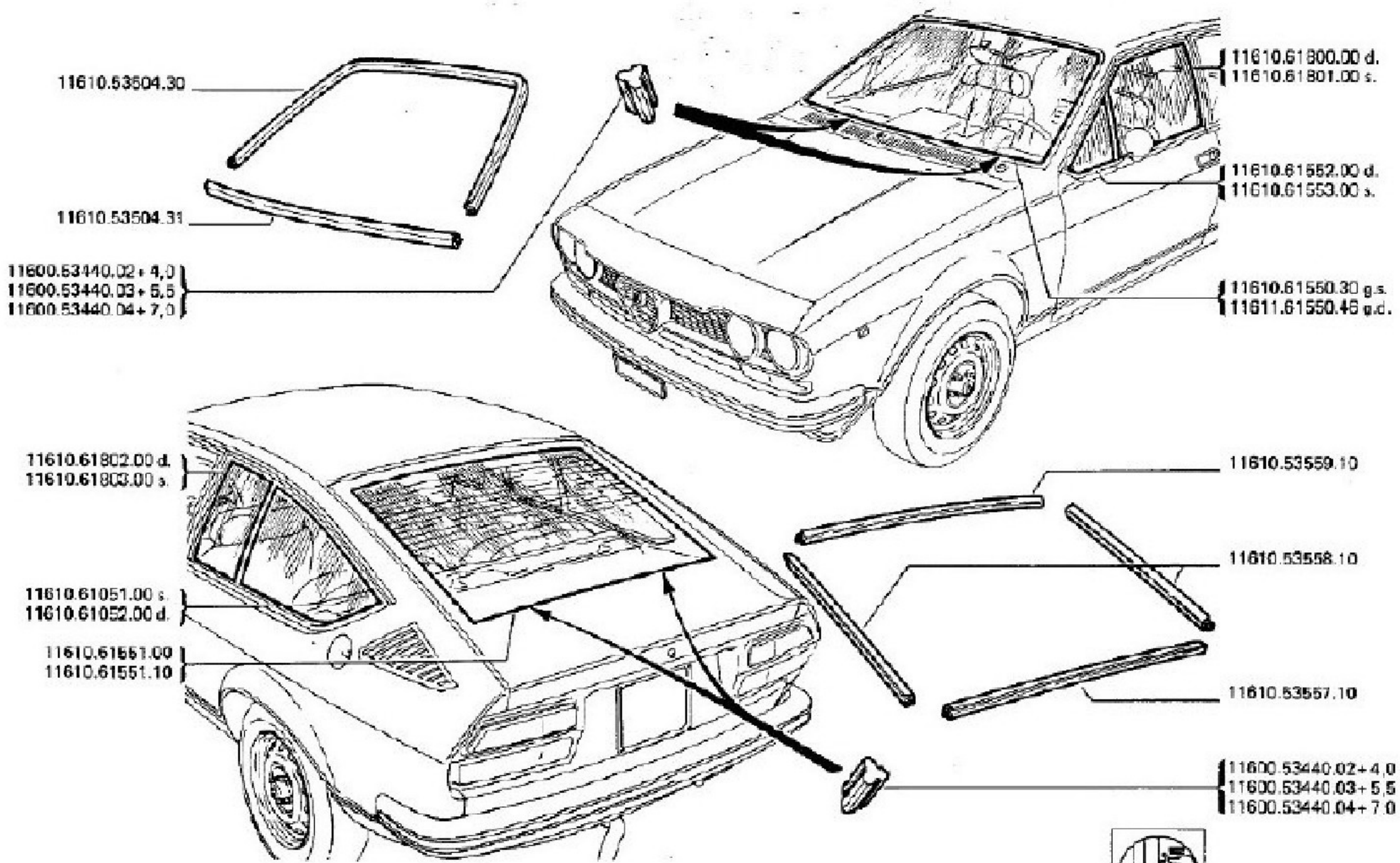

N. 5960

Alfetta GT

TAV. 65.00/0

CRISTALLI PORTE-PARABREZZA E FINESTRINO POSTERIORE
VITRES DE PORTES - PARE-BRISE ET LUNETTE ARRIERE
WINDSHIELD, SIDE AND REAR WINDOWS
VERGLASUNG
CRISTALES PUERTAS-PARABRISAS Y VENTANILLA POSTERIOR

MODIFICA	N. ORDINAZIONE	QT.	DENOMINAZIONE	DESIGNATION	DESCRIPTION	BENENNUNG	DENOMINACION
	11600.53440.02	4	DISTANZIALE +4,0	ENTRETOISE	SPACER	ABSTANDSTUECK	SEPARADOR
	11600.53440.03	4	DISTANZIALE +5,5	ENTRETOISE	SPACER	ABSTANDSTUECK	SEPARADOR
	11600.53440.04	4	DISTANZIALE +7,0	ENTRETOISE	SPACER	ABSTANDSTUECK	SEPARADOR
	11610.53504.30	1	PROFIL.SUP.PARAB.	JOINT D ETANCHEITE	WEATHERSTRIP	DICHTUNGSRAHEN	PERFIL GOMA
	11610.53504.31	1	PROFIL.INF.PARAB.	JOINT D ETANCHEITE	WEATHERSTRIP	DICHTUNGSRAHEN	PERFIL GOMA
	11610.53557.10	1	PROFIL.INF.LUNOT.	JOINT D ETANCHEITE	WEATHERSTRIP	DICHTUNGSRAHEN	PERFIL GOMA
	11610.53558.10	2	PROFIL.LAT.LUNOT.	JOINT D ETANCHEITE	WEATHERSTRIP	DICHTUNGSRAHEN	PERFIL GOMA
	11610.53559.10	1	PROFIL.SUP.LUNOT.	JOINT D ETANCHEITE	WEATHERSTRIP	DICHTUNGSRAHEN	PERFIL GOMA
	11610.61051.00	1	VOLETTO POST.S.	GLACE DE PORTE	GLASS	FENSTERSCHEIBE	CRISTAL
	11610.61052.00	1	VOLETTO POST.D.	GLACE DE PORTE	GLASS	FENSTERSCHEIBE	CRISTAL
	11610.61550.30	1	PARABREZZA GS	GLACE DE PARE-BRISE	WINDSCREEN	WINDSCHUTZSCHEIBE	CRISTAL PARABRISAS
	11610.61551.00	1	LUNOTTO	LUNETTE	REAR WINDOW	HECKFENSTER	LUNA
	11610.61551.10 *	1	LUNOTTO TERMICO	LUNETTE	REAR WINDOW	HECKFENSTER	LUNA
	11610.61552.00	1	VOLETTO ANT.D.	GLACE DE PORTE	GLASS	FENSTERSCHEIBE	CRISTAL
	11610.61553.00	1	VOLETTO ANT.S.	GLACE DE PORTE	GLASS	FENSTERSCHEIBE	CRISTAL
	11610.61800.00	1	CRISTALLO ANT.D.	GLACE DE PORTE	GLASS	FENSTERSCHEIBE	CRISTAL
	11610.61801.00	1	CRISTALLO ANT.S.	GLACE DE PORTE	GLASS	FENSTERSCHEIBE	CRISTAL
	11610.61802.00	1	CRISTALLO POST.D.	GLACE DE PORTE	GLASS	FENSTERSCHEIBE	CRISTAL
	11610.61803.00	1	CRISTALLO POST.S.	GLACE DE PORTE	GLASS	FENSTERSCHEIBE	CRISTAL
	11611.61550.46	1	PARABREZZA GD	GLACE DE PARE-BRISE	WINDSCREEN	WINDSCHUTZSCHEIBE	CRISTAL PARABRISAS

* OPZIONALE — EN OPTION — OPZIONAL — SONDERWUNSCH — A OPCION

LAVAPARABREZZA
LAVE-GLACE
WINDSHIELD WASHER
SCHEIBENWASCHANLAGE
LAVAPARABRISAS

TAV. 65.10

1°	EDIZIONE	1974	APRILE
ère	EDITION		AVRIL
st	EDITION		APRIL
a	AUSGABE		APRIL
ère	EDICION		ABRIL

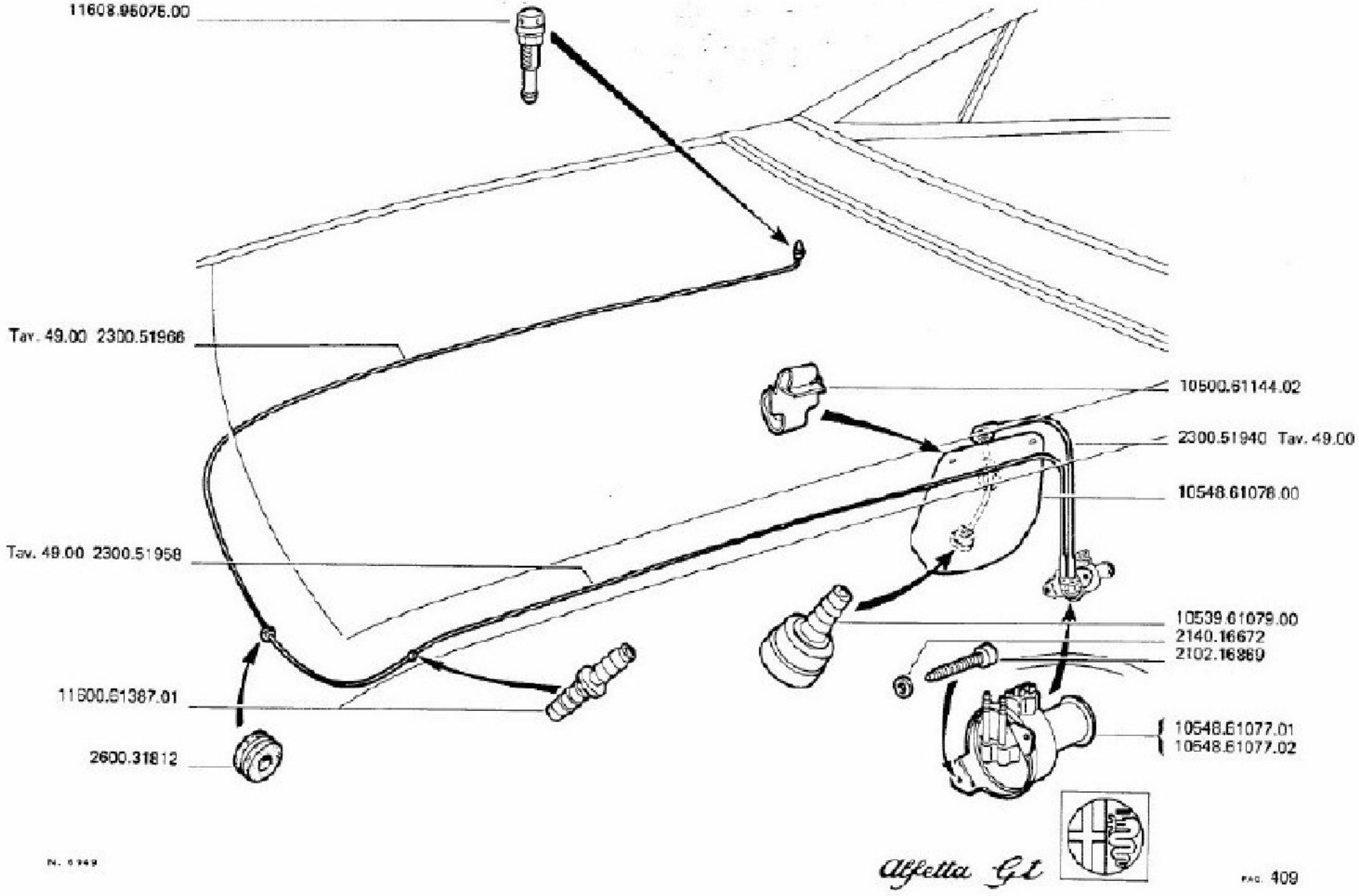

TAV. 65.10/0

LAVAPARABREZZA
LAVE-GLACE
WINDSHIELD WASHER
SCHEIBENWASCHANLAGE
LAVAPARABRISAS

MODIFICA	N. CODIFICAZIONE	QT.	DENOMINAZIONE	DESIGNATION	DESCRIPTION	BENENNUNG	DENOMINACIONES
	2102.16869	2	VITE	VIS	SCREW	SCHRAUBE	TORNILLO
	2140.16672	2	RONDELLA	RONDELLE	WASHER	SCHEIBE	ARANDELLA
	2300.51940	1	TUBETTO ALLA POMPA	TUBE	PIPE	ROEHRCHEN	TUBITO
	2300.51958	1	TUBETTO ALLA POMPA	TUBE	PIPE	ROEHRCHEN	TUBITO
	2300.51966	1	TUBETTO ALLO SPRUZZ.	TUBE	PIPE	ROEHRCHEN	TUBITO
	2600.31812	1	ANELLO	BAGUE	RING	RING	ANILLO
	10500.61144.02	2	GANCIO	CROCHET	CATCH	HAKEN	GANCHO
	10539.61079.00	1	VALVOLINA	SOUPAPE	VALVE	VENTIL	VALVULA
	10548.61077.01	1	POMPETTA INTEUROPA	POMPE DE LAVE-VITRE	WINDSCR.WASHER PUMP	PUMPE	BOMBITA
	10548.61077.02	1	POMPETTA FOREDIT	POMPE DE LAVE-VITRE	WINDSCR.WASHER PUMP	PUMPE	BOMBITA
	10548.61078.00	1	VASCHETTA	RESERVOIR	CONTAINER	BEHALTER	DEPOSITO
	11600.61387.01	1	RACCORDO	RACCORD	UNION	VERTEILER	RACOR
	11608.95075.00	1	SPRUZZATORE	GICLEUR	SPRAY NOZZLE	SPRITZDUESE	SALPICADOR

LAVAPARABREZZA A COMANDO ELETTRICO
LAVE-GLACE ELECTRIQUE
POWER WINDSHIELD WASHER
ELEKTR SCHEIBENWASCHANLAGE
LAVAPARABRISAS ELECTRICO

TAV. 85.20

1ª	EDIZIONE	1°	APRILE
1ère	EDITION		AVRIL
1st	EDITION	97	APRIL
1.	AUSGABE		APRIL
1ra	EDICION	1°	ABRIL

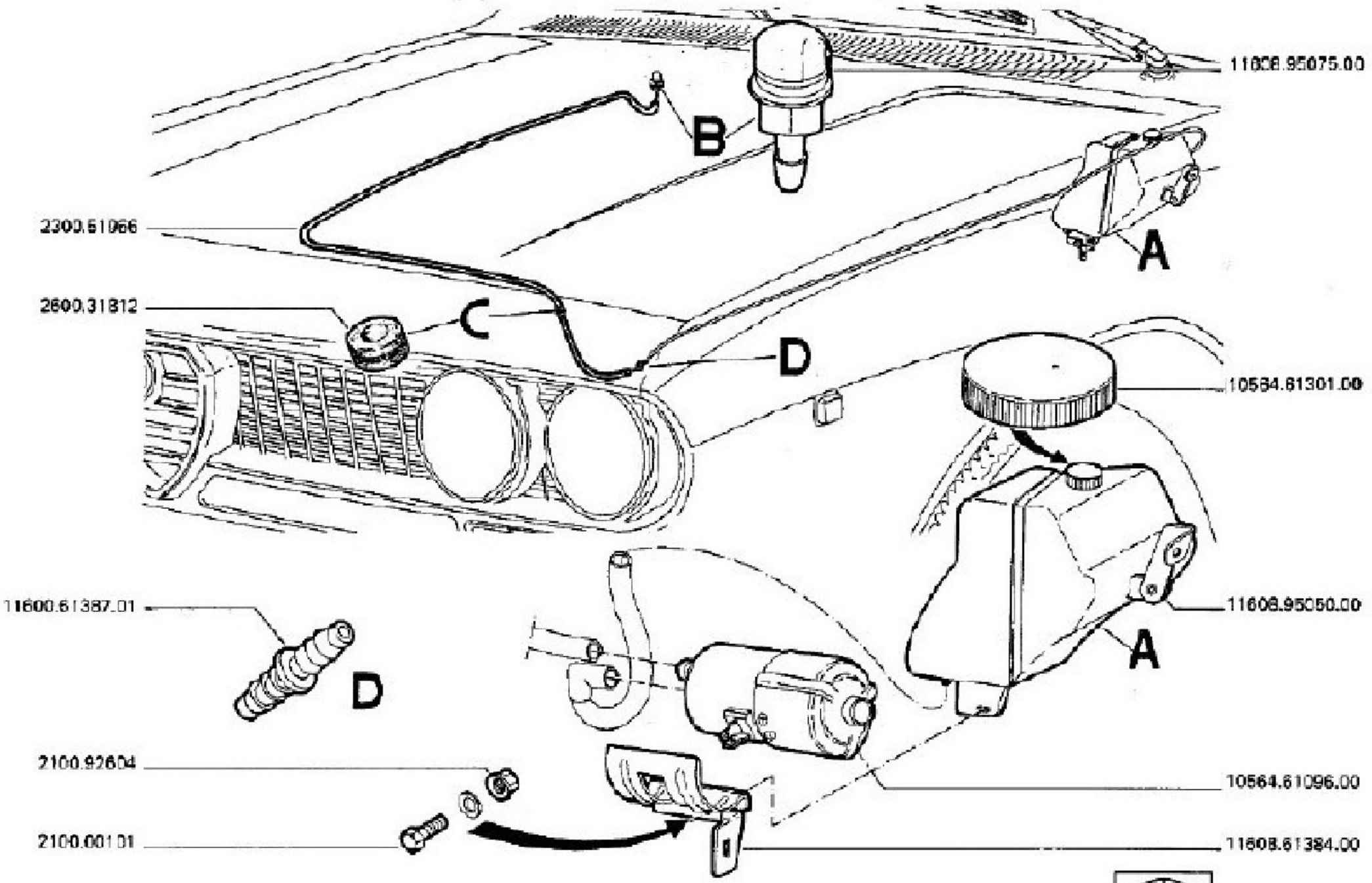

TAV. 65.2070

LAVAPARABREZZA A COMANDO ELETTRICO
LAVE-GLACE ELECTRIQUE
POWER WINDSHIELD WASHER
ELEKTR SCHEIBENWASCHANLAGE
LAVAPARABRISAS ELECTRICO

MODIFICA	N. ORDINAZIONE	QT.	DENOMINAZIONE	DESIGNATION	DESCRIPTION	BENENNUNG	DENOMINACIONES
	2100.00101	1	VITE	VIS	SCREW	SCHRAUBE	TORNILLO
	2100.92604	1	DADO	ECROU	NUT	MUTTER	TUERCA
	2300.51966	1	TUBETTO ALLO SPRUZ.	TUBE	PIPE	ROEHRCHEN	TUBITO
	2600.31812	1	ANELLO	BAGUE	RING	RING	ANILLO
	10564.61096.00	1	ELETTROPOMPA	POMPE ELECTRIQUE	ELECTRIC PUMP	ELEKTROPUMPE	ELECTROBOMBA
	10564.61301.00	1	TAPPO	BOUCHON	PLUG	VERSCHLUSSCHRAUBE	TAPON
	11600.61387.01	1	RACCORDO	RACCORD	UNION	VERTEILER	RACOR
	11608.61384.00	1	SQUADRETTA	GOUSSET	BRACKET	WINKELSTUECK	ESCUADRITA
	11608.95050.00	1	VASCHETTA	RESERVOIR	CONTAINER	BEHALTER	DEPOSITO
	11608.95073.00	1	SPRUZZATORE	GICLEUR	SPRAY NOZZLE	SPRITZDUESE	SALPICADOR

COMMUTATORE-BLOCCHETTI E SERRATURE
CONTACTEUR D'ALLUMAGE DEMARRAGE-SERRURES ET CLES
IGNITION SWITCH-LOCKS AND KEYS
ZÜNDANLASSCHLOSS-TÜERSCHLÖSSER UND SCHLÖSSER
COMMUTADOR-CERRADURA Y LLAVES

TAV. 66.00

1	EDIZIONE	1974	APRILE
	EDITION		AVRIL
	EDITION		APRIL
	AUSGABE		APRIL
	EDICION		ABRIL

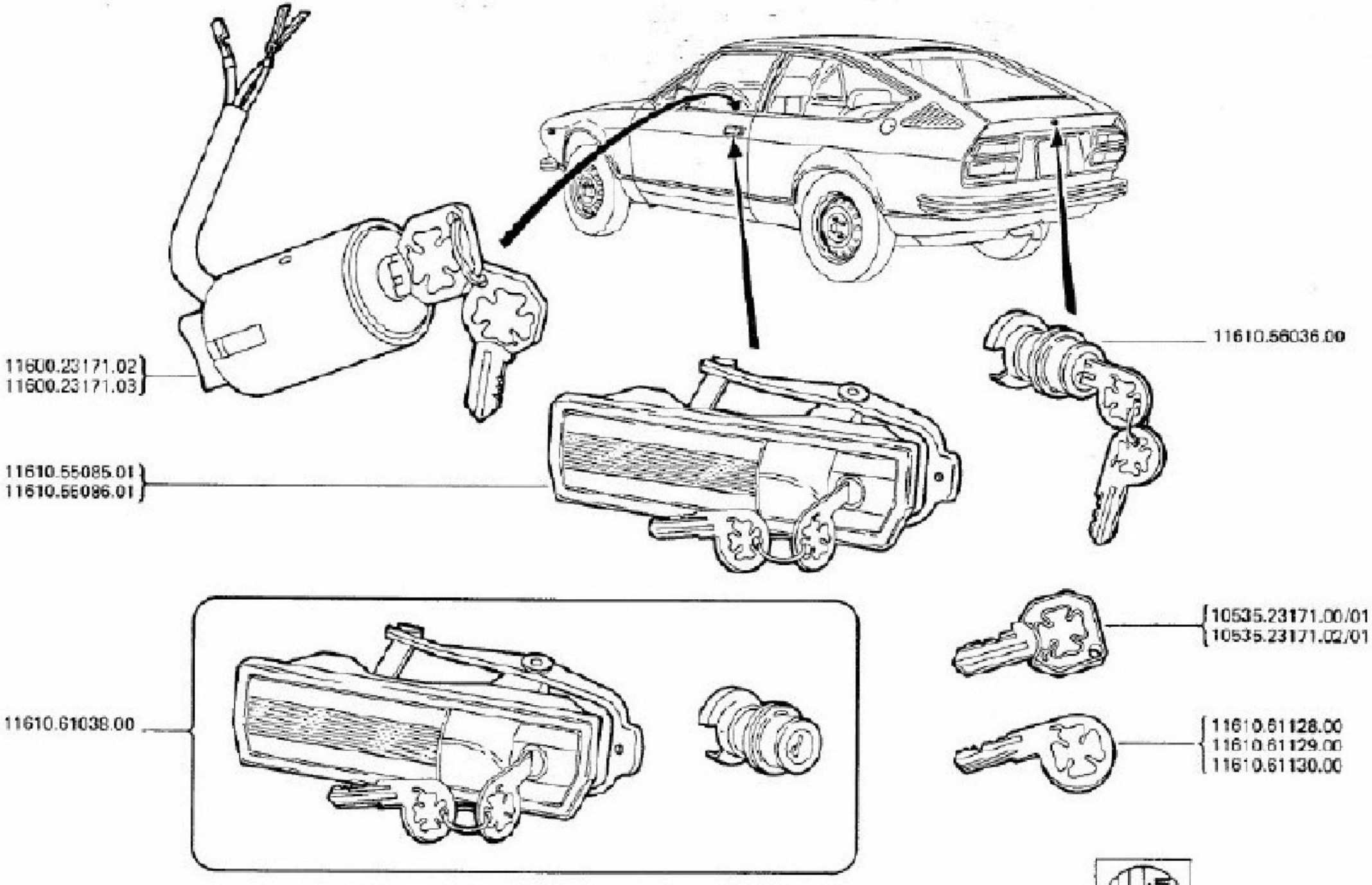

TAV. 66.00/0

COMMUTATORE-BLOCCHETTI E SERRATURE
CONTACTEUR D ALLUMAGE DEMARRAGE-SERRURES ET CLES
IGNITION SWITCH - LOCKS AND KEYS
ZUNDANLASSCHLOSS-TUERSCHLOESSER UND SCHLOESSEL
COMMUTADOR-CERRADURA Y LLAVES

MODIFICA	N. ORDINAZIONE	QT.	DENOMINAZIONE	DESIGNATION	DESCRIPTION	BENENNUNG	DENOMINACIONES
	10535.23171.00/01	0	CHIAVE COMMUT.SIPEA	CLE	KEY	SCHLUESSEL	LLAVE
	10535.23171.02/01	0	CHIAVE COMMUT.NEIMAN	CLE	KEY	SCHLUESSEL	LLAVE
	11600.23171.02	1	COMMUTATORE SIPEA	ANTIVOL	STEERING BLOCK	LENKSCHLOSS	BLOQUEADIRECCION
	11600.23171.03	1	COMMUTATORE NEIMAN	ANTIVOL	STEERING BLOCK	LENKSCHLOSS	BLOQUEADIRECCION
	11610.55085.01	1	MANIGLIA S.	POIGNEE	HANDLE	TUERGRIFF	MANILLA
	11610.55086.01	1	MANIGLIA D.	POIGNEE	HANDLE	TUERGRIFF	MANILLA
	11610.56036.00	1	BLOCCHETTO BAGAG.	SERRURE	LOCK	SCHLOSS	BLOQUE
	11610.61038.00	1	GRUPPO RICAMBI	COLLECTION-REPARATIO	REPAIR KIT	GRUPPE ERSATZTEILE	GRUPO REPUESTOS
	11610.61128.00	0	CHIAVE SAFE PROF.2	CLE	KEY	SCHLUESSEL	LLAVE
	11610.61129.00	0	CHIAVE SAFE PROF.4	CLE	KEY	SCHLUESSEL	LLAVE
	11610.61130.00	0	CHIAVE SAFE PROF.6	CLE	KEY	SCHLUESSEL	LLAVE

COFANO MOTORE
CAPOT DE MOTEUR
ENGINE HOOD
MOTORHAUBE
CAPO

TAV. 66.10

1ª	EDIZIONE	1974	APRILE
1ère	EDITION		AVRIL
1st	EDITION		APRIL
1.	AUSGABE		APRIL
1ª	EDICION		APRIL

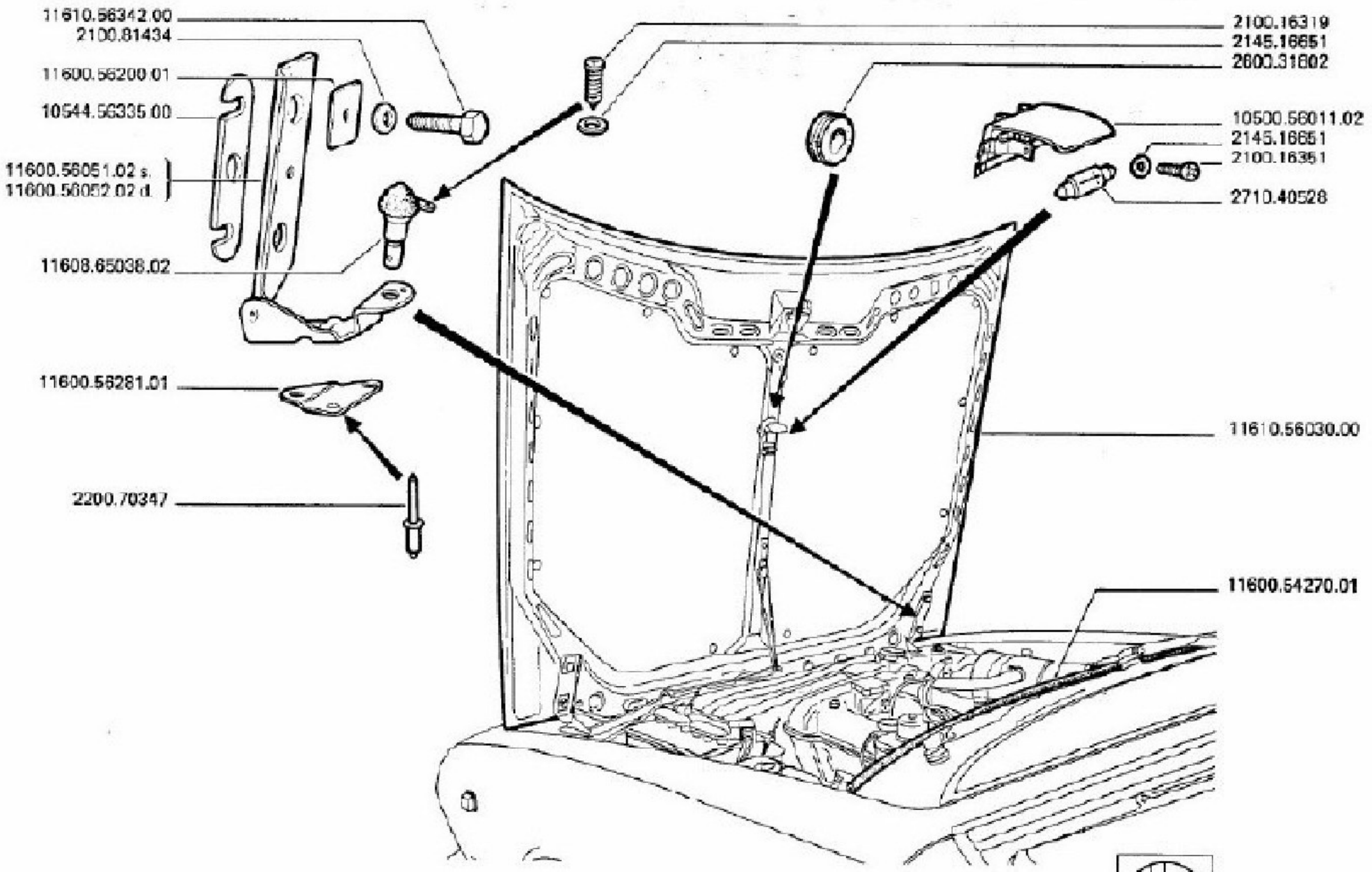

TAV. 66.10/0

COFANO MOTORE
CAPOT DE MOTEUR
ENGINE HOOD
MOTORHAUBE
CAPO

MODIFICA	N. ORDINAZIONE	QT.	DENOMINAZIONE	DESIGNATION	DESCRIPTION	BENENNUNG	DENOMINACION
	2100.16319	1	VITE	VIS	SCREW	SCHRAUBE	TORNILLO
	2100.16351	1	VITE	VIS	SCREW	SCHRAUBE	TORNILLO
	2100.81434	4	RONDELLA	RONDELLE	WASHER	SCHEIBE	ARANDELLA
	2145.16651	2	RONDELLA	RONDELLE	WASHER	SCHEIBE	ARANDELLA
	2200.70347	6	RIVETTO	RIVET	RIVET	NIET	RIVETE
	2600.31802	2	ANELLO	BAGUE	RING	RING	ANILLO
	2710.40528	1	LAMPADINA	AMPOULE	BULB	LAMPE	BOMBILLA
	10500.56011.02	1	PORTALAMPADA	PORTE-LAMPE	LAMP HOLDER	LAMPENFASSUNG	PORTALAMPARAS
	10544.56335.00	0	SPESSORE	CALE	SPACER	BEILAGE	ESPESOR
	11600.54270.01	1	PROFILATO	JOINT D ETANCHEITE	WEATHERSTRIP	DICHTUNGSRAHMEN	PERFIL GOMA
	11600.56051.02	1	CERNIERA S.	CHARNIERE	HINGE	SCHARNIER	BISAGRA
	11600.56052.02	1	CERNIERA D.	CHARNIERE	HINGE	SCHARNIER	BISAGRA
	11600.56200.01	4	PIASTRINA	PLAQUETTE	PLATE	PLAETTCHEN	PLAQUITA
	11600.56281.01	2	RINFORZO	RENFORT	REINFORCEMENT	VERSTAERKUNG	REFUERZO
	11608.65038.02	1	PULSANTE	BOUTON-POUSSOIR	PUSH BUTTON	DRUCKKNOPF	PULSANTE
	11610.56030.00	1	COFANO	CAPOT MOTEUR	ENGINE BONNET	MOTORHAUBE	CAPO MOTOR
	11610.56342.00	4	VITE	VIS	SCREW	SCHRAUBE	TORNILLO

PARTICOLARI DEL COFANO MOTORE
DETAIL DU CAPOT DE MOTEUR
ENGINE HOOD DETAILS
MOTORHAUBEN-EINZELTEILE
PARTICULARES DEL CAPO

TAV. 66.11

1ª	EDIZIONE	APRILE	1974	
1st	EDITION	APRIL		
1re	EDITION	APRIL		
1.	AUSGABE	APRIL		
1ra	EDICION	ABRIL		

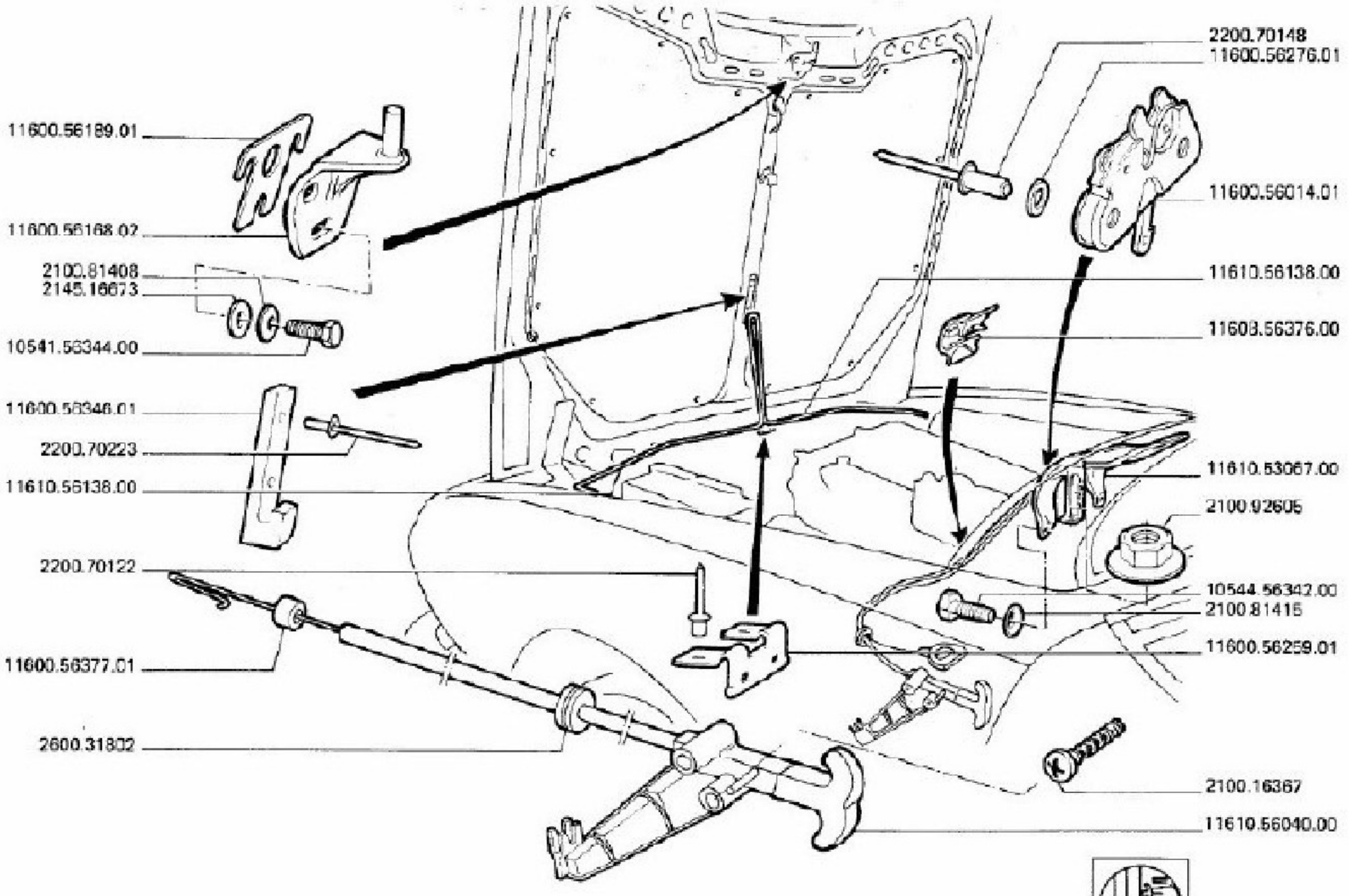

TAV. 66.11/0

PARTICOLARI DEL COFANO MOTORE
DETAIL DU CAPOT DE MOTEUR
ENGINE HOOD DETAILS
MOTORHAUBEN-EINZELTEILE
PARTICULARES DEL CAPO

MODIFICA	N. ORDINAZIONE	QT.	DENOMINAZIONE	DESIGNATION	DESCRIPTION	BENENNUNG	DENOMINACIONES
	2100.16367	2	VITE	VIS	SCREW	SCHRAUBE	TORNILLO
	2100.81408	3	RONDELLA	RONDELLE	WASHER	SCHEIBE	ARANDELLA
	2100.81415	2	RONDELLA	RONDELLE	WASHER	SCHEIBE	ARANDELLA
	2100.92605	1	DADO	ECROU	NUT	MUTTER	TUERCA
	2145.16673	3	RONDELLA	RONDELLE	WASHER	SCHEIBE	ARANDELLA
	2200.70122	4	RIVETTO	RIVET	RIVET	NIET	RIVETE
	2200.70148	2	RIVETTO	RIVET	RIVET	NIET	RIVETE
	2200.70223	2	RIVETTO	RIVET	RIVET	NIET	RIVETE
	2600.31802	1	ANELLO	BAGUE	RING	RING	ANILLO
	10541.56344.00	3	VITE	VIS	SCREW	SCHRAUBE	TORNILLO
	10544.56342.00	2	VITE	VIS	SCREW	SCHRAUBE	TORNILLO
	11600.56014.01	1	SERRATURA	SERRURE	LOCK	SCHLOSS	CERRADURA
	11600.56168.02	1	GANCIO	CROCHET	CATCH	HAKEN	GANCHO
	11600.56189.01	0	SPESSORE	CALE	SPACER	BEILAGE	ESPESOR
	11600.56259.01	1	SQUADRETTA	GOUSSET	BRACKET	WINKELSTUECK	ESCUADRITA
	11600.56276.01	2	RONDELLA	RONDELLE	WASHER	SCHEIBE	ARANDELLA
	11600.56346.01	1	FERMO	ARRETOIR	RETAINER	ANSCHLAG	RETEN
	11600.56377.01	1	ANELLO	BAGUE	RING	RING	ANILLO
	11608.56376.00	1	GANCIO	CROCHET	CATCH	HAKEN	GANCHO
	11610.53067.00	1	SUPPORTO	SUPPORT	SUPPORT	LAGERUNG	SOPORTE
	11610.56040.00	1	MANIGLIA	POIGNEE	HANDLE	TUERGRIFF	MANILLA
	11610.56138.00	1	BARRA DI TORSIONE	BARRE DE TORSION	TORSION BAR	DREHSTAB	BARRA DE TORSION

PARTICOLARI DEL COFANO MOTORE
DETAIL DU CAPOT DE MOTEUR
ENGINE HOOD DETAILS
MOTORHAUBEN-EINZELTEILE
PARTICULARES DEL CAPO

TAV. 66.11/1

1 EDIZIONE APRILE 1974
1ère EDITION AVRIL
1st EDITION APRIL
1. AUSGABE APRIL
1ra EDICION ABRIL

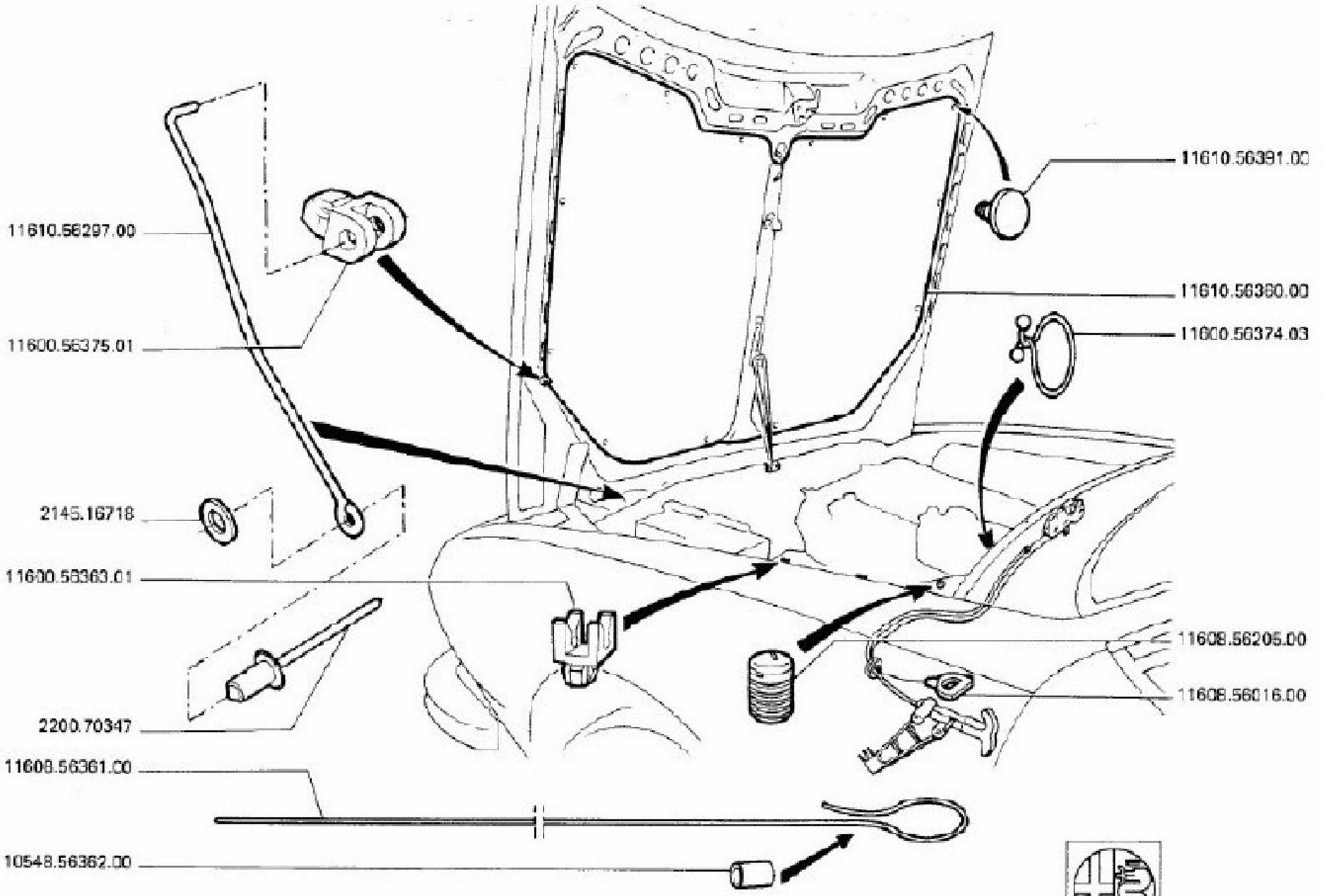

N. 6943

Alfetta GT

TAV. 66.11/1 PARTICOLARI DEL COFANO MOTORE
DETAIL DU CAPOT DE MOTEUR
ENGINE HOOD DETAILS
MOTORHAUBEN-EINZELTEILE
PARTICULARES DEL CAPO

MODIFICA	N. ORDINAZIONE	QT.	DENOMINAZIONE	DESIGNATION	DESCRIPTION	BENENNUNG	DENOMINACIONES
	2145.16718	1	ROMDELLA	RIVET	RIVET	NIET	RIVETE
	2200.70347	1	RIVETTO	RIVET	RIVET	NIET	RIVETE
	10548.56362.00	1	TUBETTO	TUBE	PIPE	ROEHRCHEN	TUBITO
	11600.56363.01	1	FERMO	ARRETOIR	RETAINER	ANSCHLAG	RETEN
	11600.56374.03	1	MOLLETTA	AGRAFE	CLIP	KLEMMSTUECK	MUELLECITO
	11600.56375.01	1	FERMO	ARRETOIR	RETAINER	ANSCHLAG	RETEN
	11608.56016.00	1	MANIGLIA EMERGENZA	POIGNEE	HANDLE	TUERGRIFF	MANILLA
	11608.56205.00	2	TAMPONCINO	BLOC CAOUTCHOUC	RUBBER PAD	PUFFER	TAMPON
	11608.56361.00	1	CAVO EMERGENZA	CABLE	CABLE	KABEL	CABLE
	11610.56297.00	1	ASTA	TIGE	ROD	STANGE	ASTA
	11610.56360.00	1	INSONORIZZANTE	PAN. INSONORISATION	SOUND DEADENING PANE	SCHALLDAEMPFER	INSONORIZACION
	11610.56391.00	14	TAPPO	BOUCHON	PLUG	VERSCHLUSSCHRAUBE	TAPON

CONTENITORI E GOMMINI DI TENUTA SUL CRUSCOTTO (per vett. g. s.)
TAMPONS ET BOUCHONS SUR LE TABLIER (pour voitures direction à gauche)
RETAINERS AND GROMMETS ON DASHBOARD (for L.H.D. cars)
HALTERUNGEN U. GUMMIDICHTUNGEN AN STIRNWAND (F.LL)
ENVASES Y GOMA DE HERMETICIDAD EN EL TABLERO (para aut. g. izq.)

TAV. 66.20

1	EDIZIONE	1974	APRILE
	EDITION		AVRIL
	EDITION		APRIL
	AUSGABE		APRIL
	EDICION		ABRIL

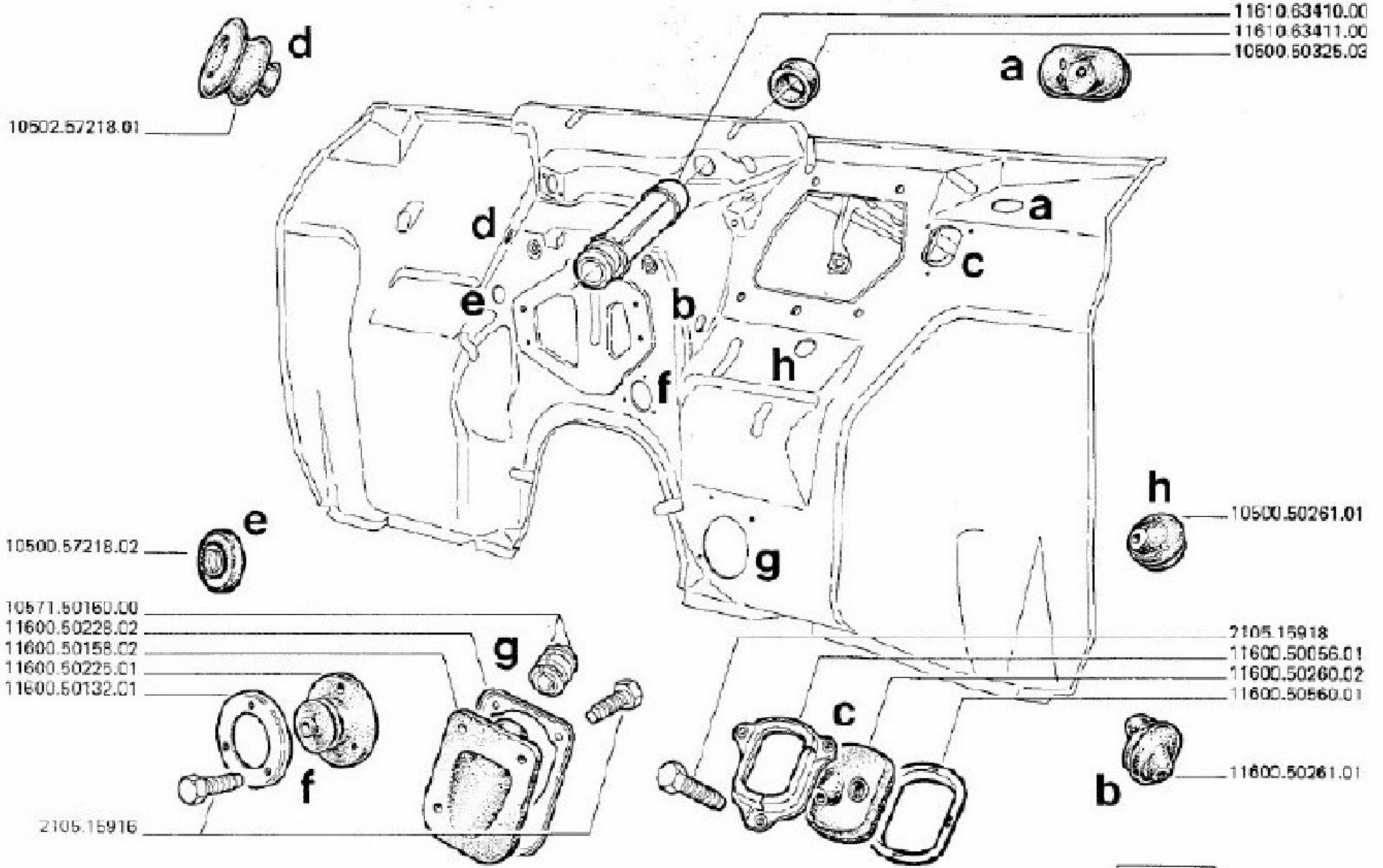

TAV. 66.20/0

CONTENITORI E GOMMINI DI TENUTA SUL CRUSCOTTO PER VETT. G.S.
TAMPONS ET BOUCHONS SUR LE TABLIER VOIT.D.A G.
RETAINERS AND GROMMETS ON DASHBOARD FOR L.H.D. CARS
HALTERUNGEN U. GUMMIDICHTUNGEN AN STIRNWAND F.LL
ENVASES Y GOMA DE HERMETICIDAD EN EL TABLERO PARA AUTOM.G.IZQ.

MODIFICA	N. ORDINAZIONE	QT.	DENOMINAZIONE	DÉSIGNATION	DESCRIPTION	BENENNUNG	DENOMINACIONES
	2100.15916	6	VITE	VIS	SCREW	SCHRAUBE	TORNILLO
	2100.15918	3	VITE	VIS	SCREW	SCHRAUBE	TORNILLO
	10500.50261.01	1	GOMMINO	CAOUTCHOUC	GROMMET	GUMMITEIL	GOMITA
	10500.50325.03	1	GOMMINO	CAOUTCHOUC	GROMMET	GUMMITEIL	GOMITA
	10500.57218.02	1	GOMMINO	CAOUTCHOUC	GROMMET	GUMMITEIL	GOMITA
	10502.57218.01	1	GOMMINO	CAOUTCHOUC	GROMMET	GUMMITEIL	GOMITA
	10571.50160.00	2	BOCCOLA	BAGUE	BUSHING	BUECHSE	CASQUILLO
	11600.50056.01	1	CONTENITORE	SUPPORT	RETAINER	BEHAELTER	ENVASE
	11600.50132.01	1	CONTENITORE	SUPPORT	RETAINER	BEHAELTER	ENVASE
	11600.50153.02	1	PROTEZIONE	PROTECTEUR	PROTECTION	SCHUTZ	PROTECCION
	11600.50225.01	1	PROTEZIONE	PROTECTEUR	PROTECTION	SCHUTZ	PROTECCION
	11600.50228.02	1	CONTENITORE	SUPPORT	RETAINER	BEHAELTER	ENVASE
	11600.50260.02	1	GOMMINO	CAOUTCHOUC	GROMMET	GUMMITEIL	GOMITA
	11600.50261.01	1	GOMMINO	CAOUTCHOUC	GROMMET	GUMMITEIL	GOMITA
	11600.50560.01	1	GOMMINO	CAOUTCHOUC	GROMMET	GUMMITEIL	GOMITA
	11610.63410.00	1	TUBO	TUBE	PIPE	ROHR	TUBO
	11610.63411.00	1	GOMMINO	CAOUTCHOUC	GROMMET	GUMMITEIL	GOMITA

CONTENITORI E GOMMINI DI TENUTA SUL CRUSCOTTO (PER VETTURE G.D.)
TAMPONS ET BOUCHONS SUR LE TABLIER (VOITURES DIRECTION A DROITE)
RETAINERS AND GROMMETS ON DASHBOARD (R.H.D.)
HALTERUNGEN UND GUMMIDICHTUNGEN AN STIRNWAND (F.R.)
ENVASES Y GOMAS DE HERMETICIDAD EN EL TABLERO (PARA AUTOMOV. G.D.)

TAV. 66.21

1ª	EDIZIONE	APRILE	1974
1ère	EDITION	AVRIL	
1st	EDITION	APRIL	
1ª	AUSGABE	APRIL	
1ª	EDICION	ABRIL	

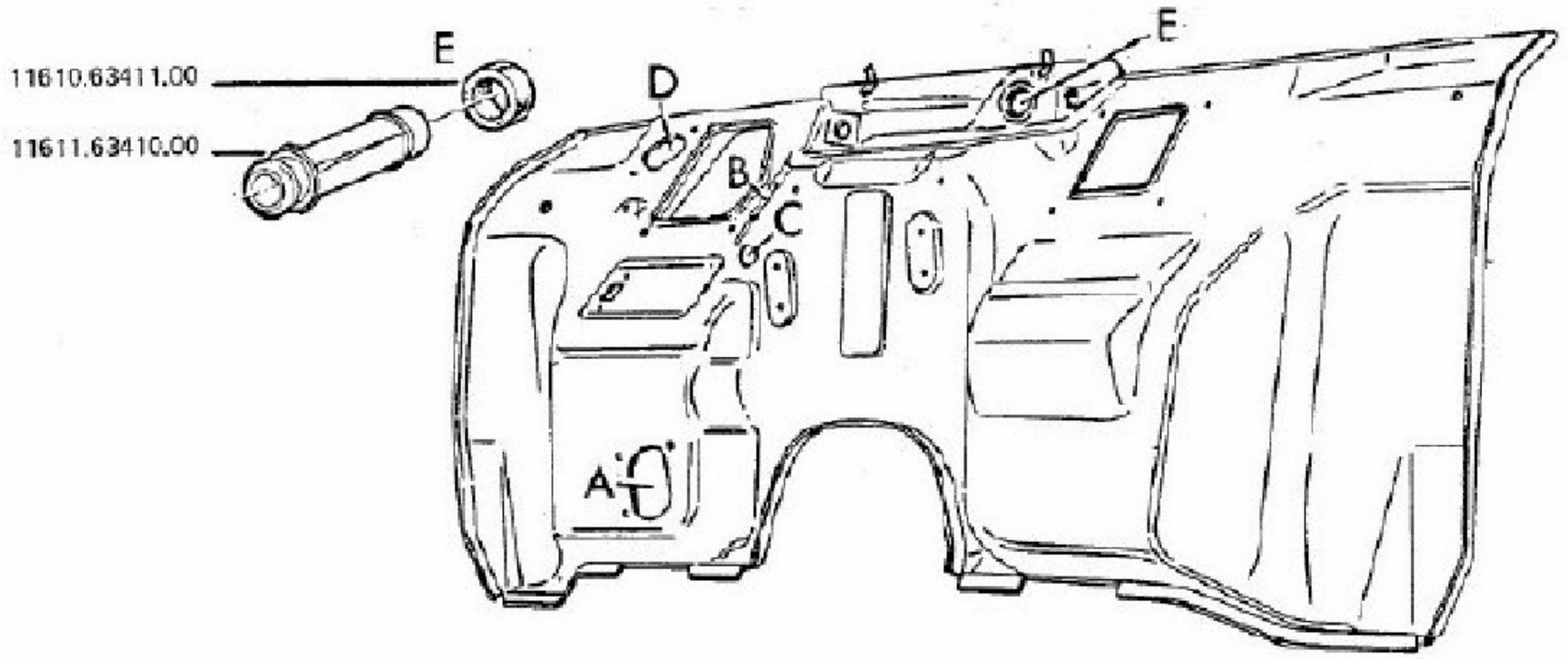

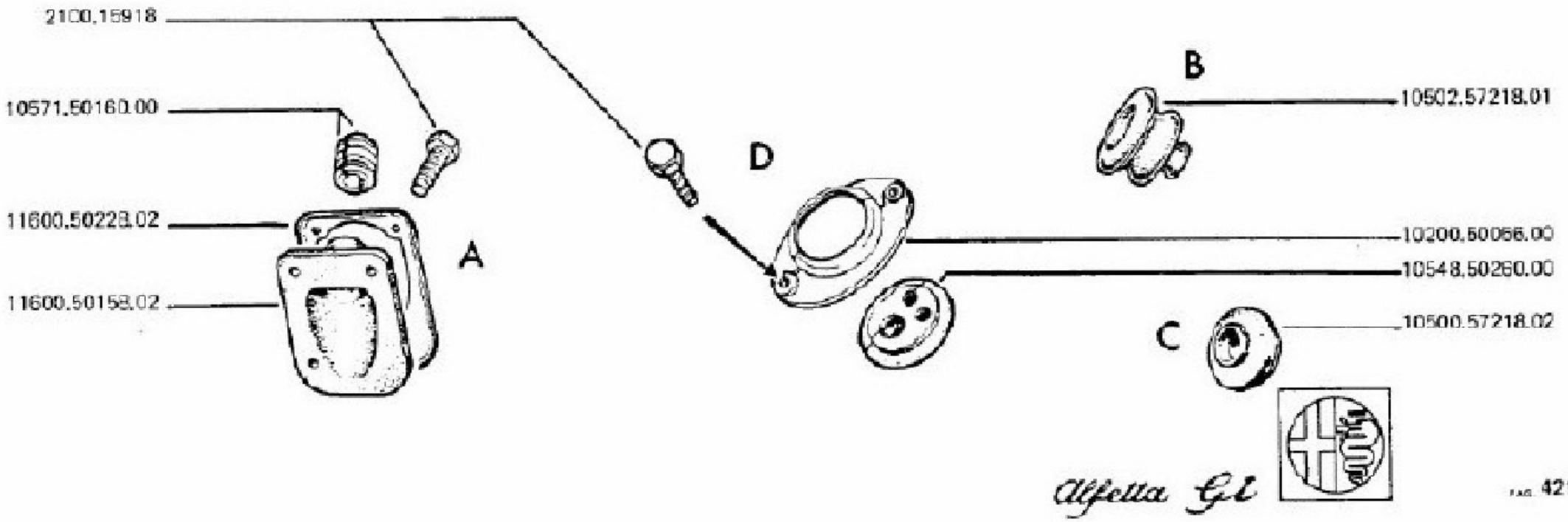

Alfetta GT

TAV. 66.21/0 CONTENITORI E GOMMINI DI TENUTA SUL CRUSCOTTO PER VETT. G.D.
TAMPONS ET BOUCHONS SUR LE TABLIER VOIT.D. A D.
RETAINERS AND GROMMETS ON DASHBOARD FOR R.H.D. CARS
HALTERUNGEN UND GUMMIDICHTUNGEN AN STIRNWAND F.R.L
ENVASES Y GOMAS DE HERMETICIDAD EN EL TABLERO PARA AUTOM. G.D.

MODIFICA	N. ORDINAZIONE	QT.	DENOMINAZIONE	DESIGNATION	DESCRIPTION	BENENNUNG	DENOMINACIONES
	2100.15918	5	VITE	VIS	SCREW	SCHRAUBE	TORNILLO
	10200.50056.00	1	CONTENITORE	SUPPORT	RETAINER	BEHAELTER	ENVASE
	10500.57218.02	1	GOMMINO	CAOUTCHOUC	GROMMET	GUMMITEIL	GOMITA
	10502.57218.01	1	GOMMINO	CAOUTCHOUC	GROMMET	GUMMITEIL	GOMITA
	10548.50260.00	1	GOMMINO	CAOUTCHOUC	GROMMET	GUMMITEIL	GOMITA
	10571.50160.00	2	BOCCOLA	BAGUE	BUSHING	BUECHSE	CASQUILLO
	11600.50158.02	1	PROTEZIONE	PROTECTEUR	PROTECTION	SCHUTZ	PROTECCION
	11600.50228.02	1	CONTENITORE	SUPPORT	RETAINER	BEHAELTER	ENVASE
	11610.63411.00	1	GOMMINO	CAOUTCHOUC	GROMMET	GUMMITEIL	GOMITA
	11611.63410.00	1	TUBO	TUBE	PIPE	ROHR	TUBO

TAV. 66.30

1 EDIZIONE 1974 APRILE
EDITION AVRIL
EDITION APRIL
AUSGABE APRIL
EDICION ABRIL

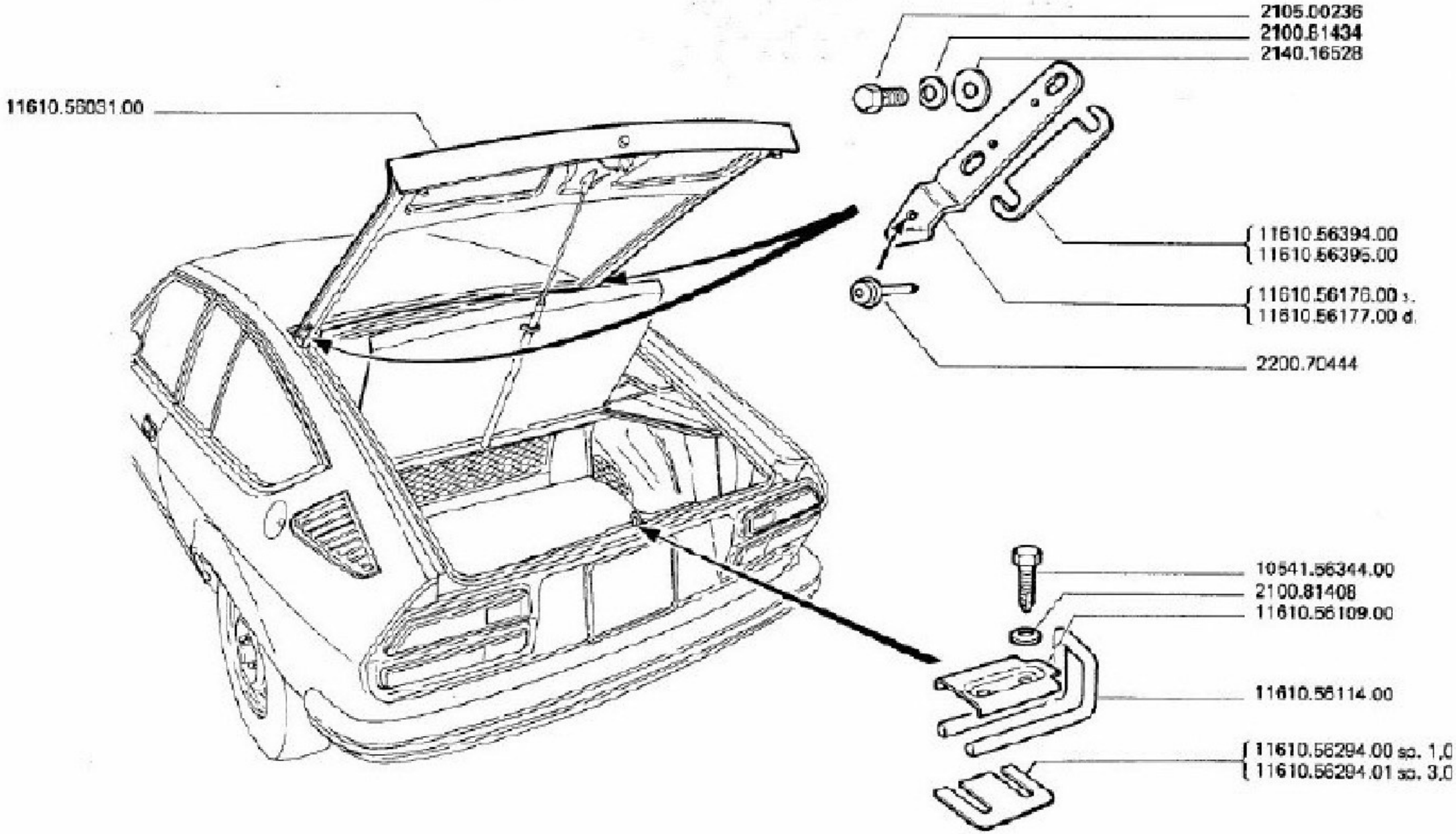

TAV. 66.30/0

COFANO BAGAGLIERA
COFFRE A BAGAGES
TRUNK LID
KOFFERRAUMDECKEL
CAPO DEL PORTAEQUIPAJES

NOBIPIGA	N. ORDINAZIONE	QT.	DENOMINAZIONE	DESIGNATION	DESCRIPTION	BENENNUNG	DENOMINACIONES
	2100.81408	2	RONDELLA	RONDELLE	WASHER	SCHEIBE	ARANDELLA
	2100.81434	4	RONDELLA	RONDELLE	WASHER	SCHEIBE	ARANDELLA
	2105.00236	4	VITE	VIS	SCREW	SCHRAUBE	TORNILLO
	2140.16528	4	RONDELLA	RONDELLE	WASHER	SCHEIBE	ARANDELLA
	2200.70444	2	RIVETTO	AGRAFE	CLIP	KLEMMSTUECK	MUELLECITO
	10541.56344.00	2	VITE	VIS	SCREW	SCHRAUBE	TORNILLO
	11610.56031.00	1	COFANO	PORTE DE MALLE	LUGGAGE BOOT LID	KOFFERRAUMDECKEL	PORTAEQUI PAJES-CAPO
	11610.56109.00	1	PIASTRA	PLAQUE	PLATE	PLATTE	PLACA
	11610.56114.00	1	GANCIO	CROCHET	CATCH	HAKEN	GANCHO
	11610.56176.00	1	CERNIERA D.	CHARNIERE	HINGE	SCHARNIER	BISAGRA
	11610.56177.00	1	CERNIERA S.	CHARNIERE	HINGE	SCHARNIER	BISAGRA
	11610.56294.00	0	SPESSORE + 1,0	CALE	SPACER	BEILAGE	ESPESOR
	11610.56294.01	0	SPESSORE + 3,0	CALE	SPACER	BEILAGE	ESPESOR
	11610.56394.00	0	SPESSORE	CALE	SPACER	BEILAGE	ESPESOR
	11610.56395.00	0	SPESSORE	CALE	SPACER	BEILAGE	ESPESOR

PARTICOLARI COFANO BAGAGLIERA
DETAIL DU COFFRE A BAGAGES
TRUNK LID DETAILS
KOFFERRAUMDECKEL-EINZELTEILE
PARTICULARES DEL CAPO PORTAEQUIPAJES

TAV. 66.31

1ª EDIZIONE 1ª EDITION 1ª EDITION AUSGABE 1ª EDICION — APRILE APRIL APRIL APRIL ABRIL — 1974

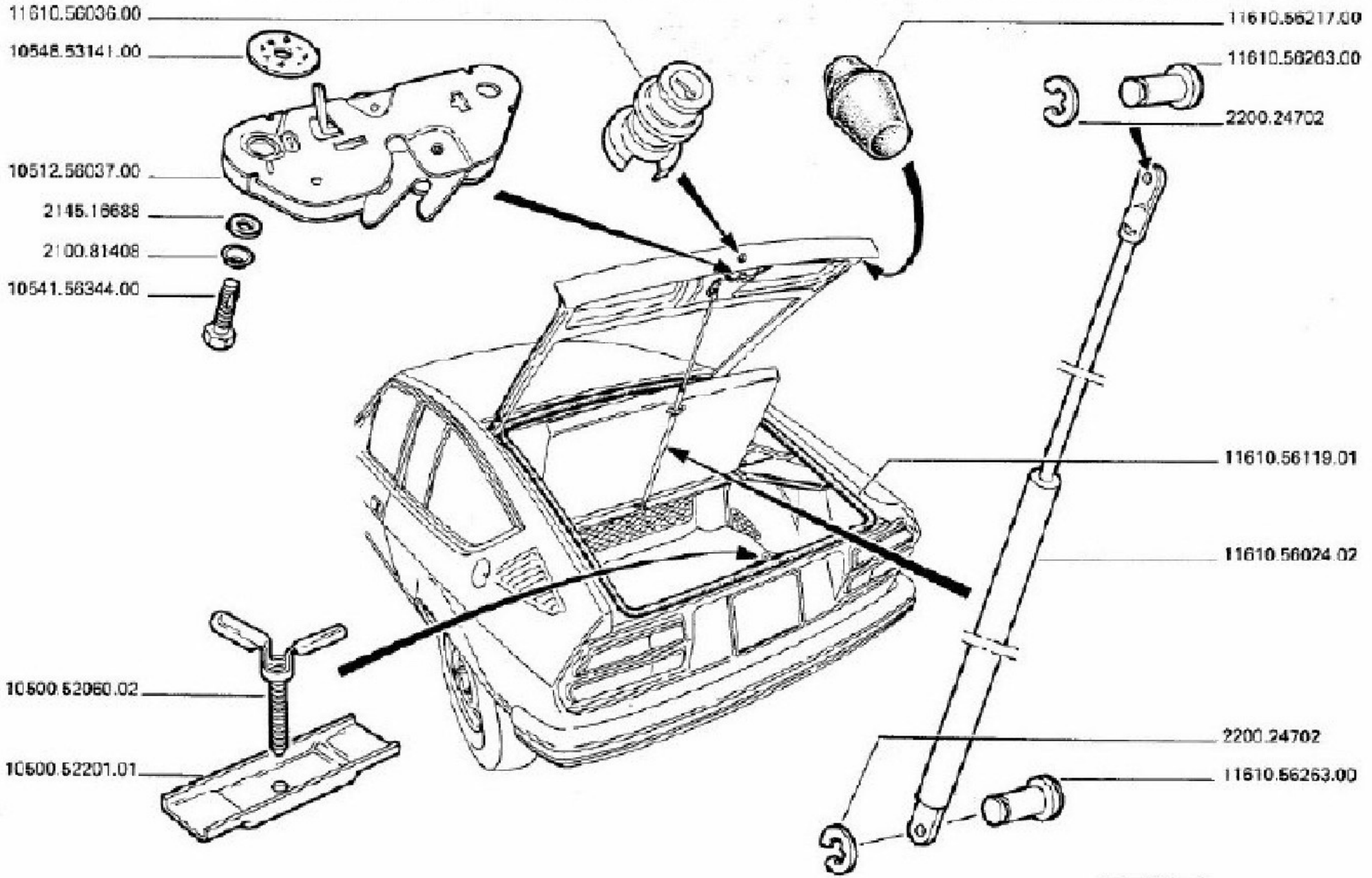

N. 6304

Alfetta GT

TAV. 66.31/0

PARTICOLARI COFANO BAGAGLIERA
DETAIL DU COFFRE A BAGAGES
TRUNK LID DETAILS
KOFFERRAUMDECKEL-EINZELTEILE
PARTICULARES DEL CAPO PORTAEQUIPAJES

MODIFICA	N. DENOMINAZIONE	QT.	DENOMINAZIONE	DÉSIGNATION	DESCRIPTION	BENENNUNG	DENOMINACIONES
	2100.81408	2	RONDELLA	RONDELLE	WASHER	SCHEIBE	ARANDELLA
	2145.16688	2	RONDELLA	RONDELLE	WASHER	SCHEIBE	ARANDELLA
	2200.24702	2	ANELLO ELASTICO	JONC DE RETENUE	RETAINER RING	SPRENGRING	ANILLO ELASTICO
	10500.52060.02	1	PERNO	AXE	PIVOT PIN	ZAPFEN	PERNO
	10500.52201.01	1	STAFFA	ETRIER-SUPPORT	BRACKET	HALTERBUEGEL	ESTRIBO
	10512.56037.00	1	SERRATURA	SERRURE	LOCK	SCHLOSS	CERRADURA
	10541.56344.00	2	VITE	VIS	SCREW	SCHRAUBE	TORNILLO
	10548.53141.00	2	PIASTRINA	PLAQUETTE	PLATE	PLAETTCHEN	PLAQUITA
	11610.56024.02	1	DISPOSITIVO APERTURA	DISPOSITIF	ACTUATOR	VORRICHTUNG	DISPOSITIVO
	11610.56036.00	1	BLOCCHETTO SERRATURA	SERRURE	LOCK	SCHLOSS	BLOQUE
	11610.56119.01	1	GUARNIZIONE	JOINT	GASKET	DICHTUNG	JUNTA
	11610.56217.00	2	TAMPONE	BLOC CAOUTCHOUC	RUBBER PAD	PUFFER	TAMPON
	11610.56263.00	2	PERNO	AXE	PIVOT PIN	ZAPFEN	PERNO

PORTE ANTERIORI
PORTES AVANT
FRONT DOORS
FAHRERTÜREN
PUERTAS ANTERIORES

TAV. 67.00

1°	EDIZIONE	1974	APRILE
ère	EDITION		AVRIL
st	EDITION		APRIL
	AUSGABE		APRIL
ª	EDICION		ABRIL

AGGIORNAMENTO

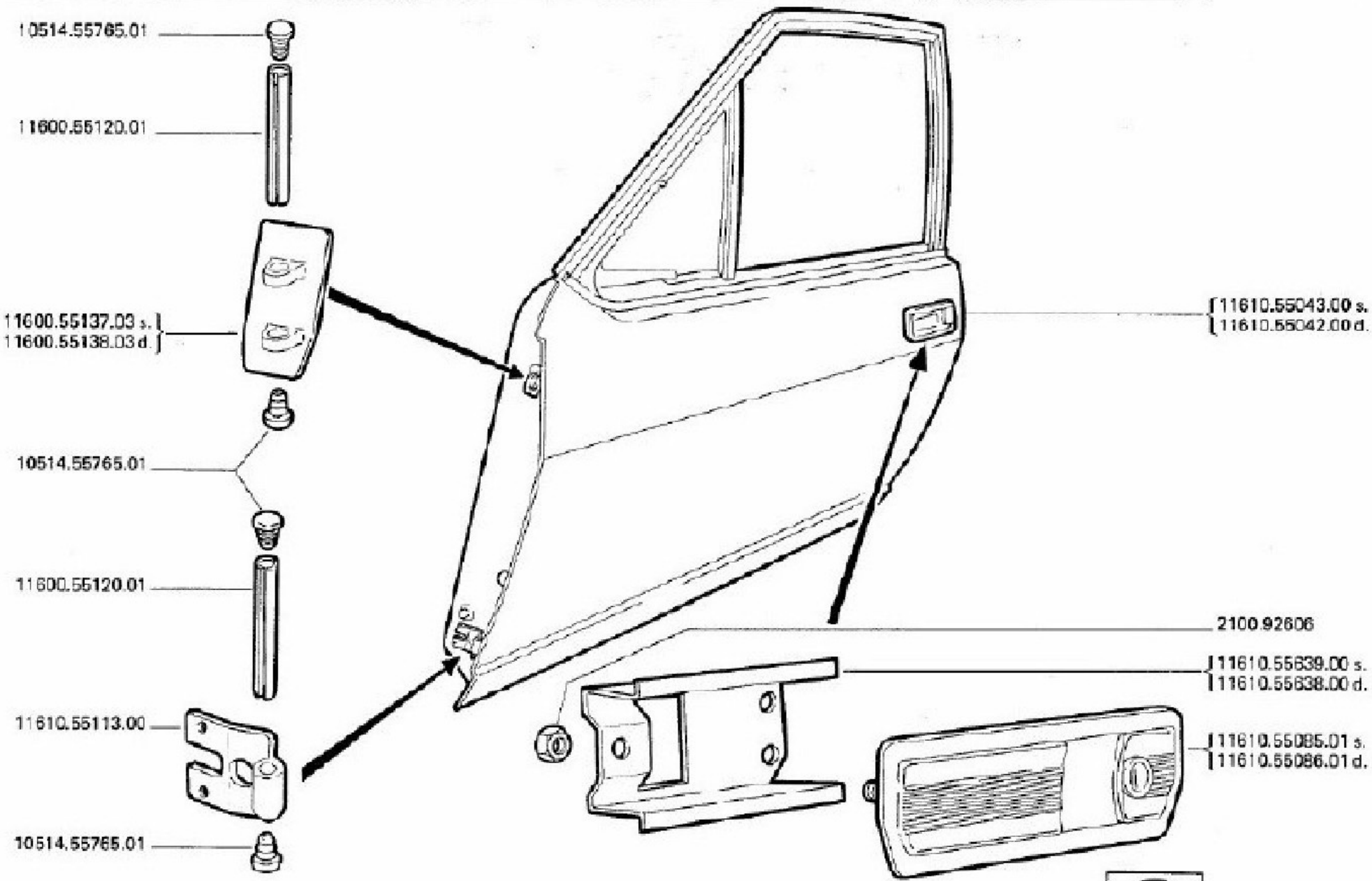

TAV. 67.00/0

PORTE ANTERIORI
PORTES AVANT
FRONT DOORS
FAHRERTUEREN
PUERTAS ANTERIORES

MODIFICA	N ORDINAZIONE	QT.	DENOMINAZIONE	DESIGNATION	DESCRIPTION	BENENNUNG	DENOMINACIONES
	2100.92606	6	DADO	ECROU	NUT	MUTTER	TUERCA
	10514.55765.01	8	TAPPO	BOUCHON	PLUG	VERSCHLUSSCHRAUBE	TAPON
	11600.55120.01	4	PERNO	AXE	PIVOT PIN	ZAPFEN	PERNO
	11600.55137.03	1	CERNIERA SUP.S.	CHARNIERE	HINGE	SCHARNIER	BISAGRA
	11600.55138.03	1	CERNIERA SUP.D.	CHARNIERE	HINGE	SCHARNIER	BISAGRA
	11610.55042.00	1	PORTA D.	PORTE	DOOR	TUER	PUERTA
	11610.55043.00	1	PORTA S.	PORTE	DOOR	TUER	PUERTA
	11610.55085.01	1	MANIGLIA S.	POIGNEE	HANDLE	TUERGRIFF	MANILLA
	11610.55086.01	1	MANIGLIA D.	POIGNEE	HANDLE	TUERGRIFF	MANILLA
	11610.55113.00	2	CERNIERA INF.	CHARNIERE	HINGE	SCHARNIER	BISAGRA
	11610.55638.00	1	STAFFA D.	ETRIER-SUPPORT	BRACKET	HALTERBUEGEL	ESTRIBO
	11610.55639.00	1	STAFFA S.	ETRIER-SUPPORT	BRACKET	HALTERBUEGEL	ESTRIBO

PARTICOLARI DELLE PORTE ANTERIORI
DETAIL DES PORTES AVANT
FRONT DOOR DETAILS
FAHRERTUEREN EINZELTEILE
PARTICULARES DE LAS PUERTAS ANTERIORES

TAV. 67.01

1 EDIZIONE / EDITION / EDITION / AUSGABE / EDICION — 1974 — APRILE / AVRIL / APRIL / APRIL / ABRIL

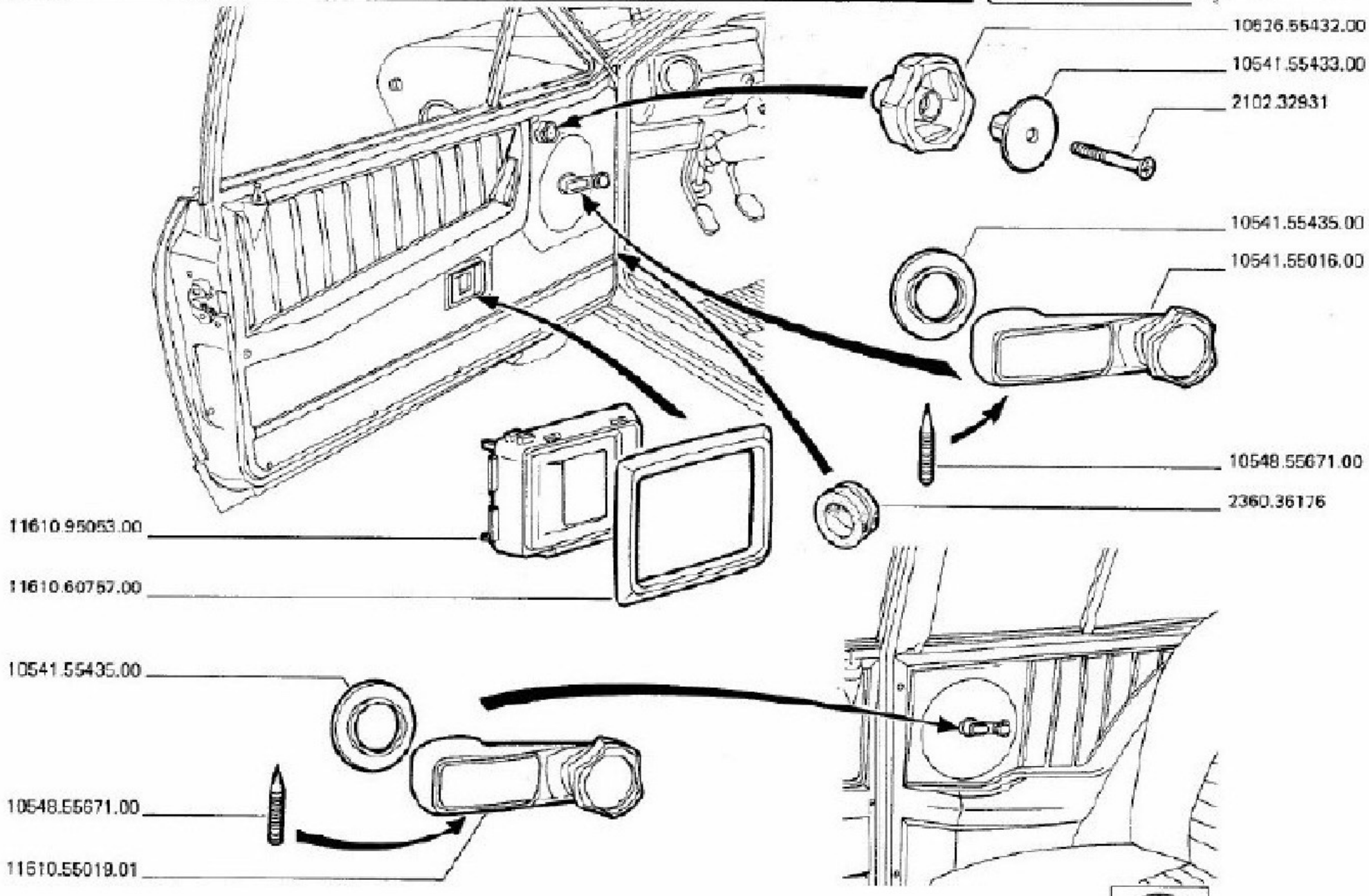

N. 4959

Alfetta GT

TAV. 67.01/D

PARTICOLARI DELLE PORTE ANTERIORI
DETAIL DES PORTES AVANT
FRONT DOOR DETAILS
FAHRERTUEREN-EINZELTEILE
PARTICULARES DE LAS PUERTAS ANTERIORES

MODIFICA	N. ORDINAZIONE	QT.	DENOMINAZIONE	DESIGNATION	DESCRIPTION	BENENNUNG	DENOMINACIONES
	2102.32931	2	VITE	VIS	SCREW	SCHRAUBE	TORNILLO
	2360.36176	2	TAPPO	BOUCHON	PLUG	VERSCHLUSSCHRAUBE	TAPON
	10526.55432.00	2	VOLANTINO	MANETTE	KNOB	DREHKNOPF	VOLANTITO
	10541.55016.00	2	MANIGLIA ALZAC.PORTA	POIGNEE	HANDLE	TUERGRIFF	MANILLA
	10541.55433.00	2	MOSTRINA VOLANTINO	MOTIF	ORNAMENT	ZIERUNTERLAGE	DISTINTIVO
	10541.55435.00	4	DISTANZIALE	ENTRETOISE	SPACER	ABSTANDSTUECK	SEPARADOR
	10548.55671.00	4	VITE	VIS	SCREW	SCHRAUBE	TORNILLO
	11610.55019.01	2	MANIGLIA ALZAC.POST.	POIGNEE	HANDLE	TUERGRIFF	MANILLA
	11610.60757.00	2	CORNICE MANIGLIA	MONTURE	FRAME	RAHMEN	MARCO
	11610.95053.00	2	MANIGLIA INTERNA	POIGNEE	HANDLE	TUERGRIFF	MANILLA

SERRATURE ALZACRISTALLI E PROFILATI PORTE ANTERIORI
SERRURES-LEVE-GLACE ET PROFILS DE PORTES AVANT
FRONT DOOR LOCKS WINDOW REGULATORS AND MOULDINGS
SCHLÖSSER-FENSTERHEBER U. ZIERLEISTEN FAHRERTUER
CERRADURAS-ELEVADORES CRISTALES Y PERFILES PUERTAS ANTERIORES

TAV. 67.02

1ª EDIZIONE 1ª EDITION 1ª EDITION 1ª AUSGABE 1ª EDICION — APRILE APRIL APRIL APRIL ABRIL 1974

DATA DELLO AGGIORNAMENTO

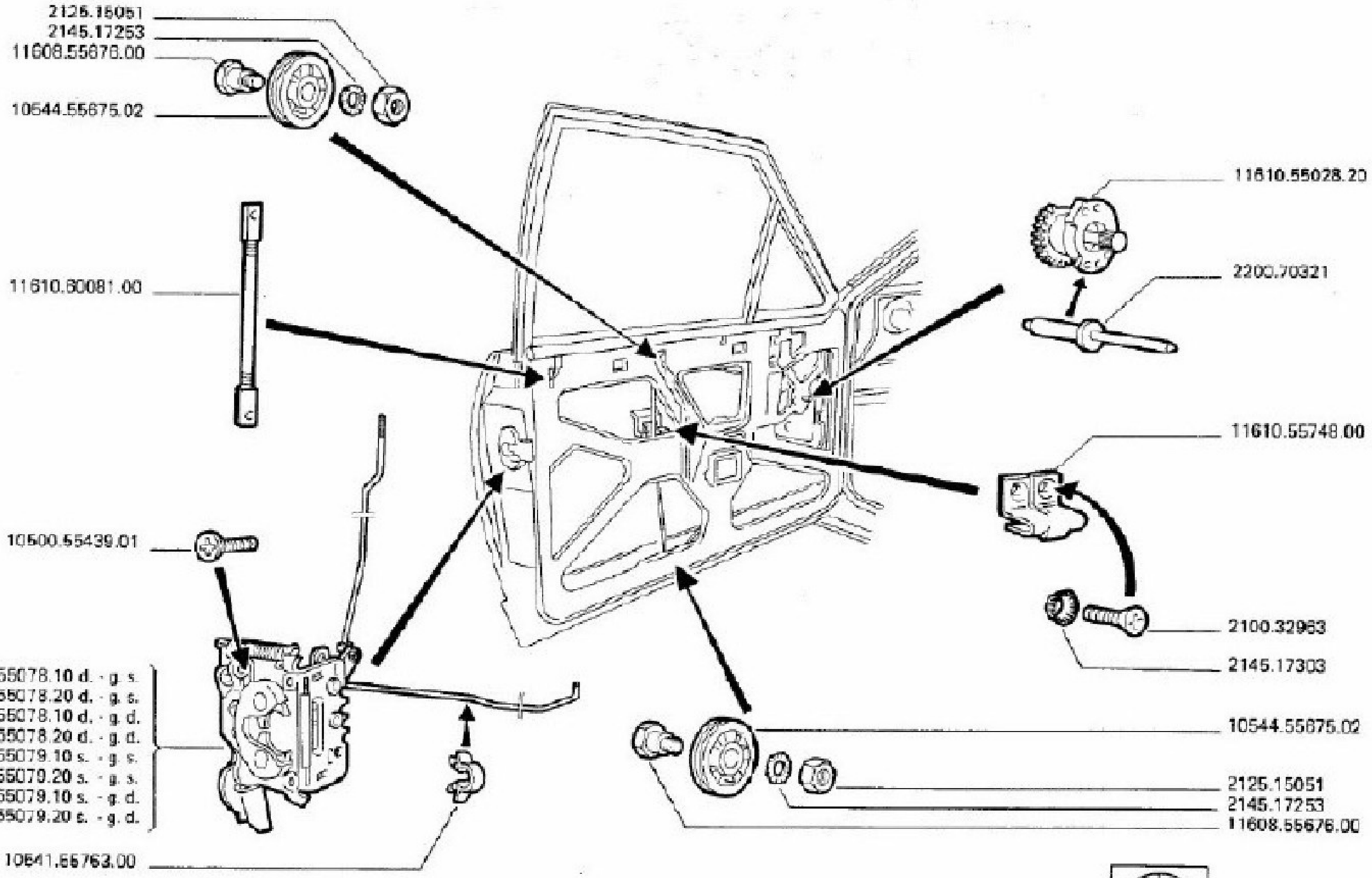

N. 6331

Alfetta GT

TAV. 67.02/0 SERRATURE-ALZACRISTALLI E PROFILATI PORTE ANTERIORI
SERRURES-LEVE-GLACE ET PROFILS DE PORTES AVANT
FRONT DOOR LOCKS WINDOW REGULATORS AND MOULDINGS
SCHLOESSER-FENSTERHEBER U.ZIERLEISTEN DER FAHRERTUEREN
CERRADURAS-ELEVADORES CRISTALES Y PERFILES DE LAS PUERTAS ANTER.

MODIFICA	N. ORDINAZIONE	QT.	DENOMINAZIONE	DÉSIGNATION	DESCRIPTION	BENENNUNG	DENOMINACIONES
	2100.32963	4	VITE	VIS	SCREW	SCHRAUBE	TORNILLO
	2125.15051	4	DADO	ECROU	NUT	MUTTER	TUERCA
	2145.17253	4	RONDELLA	RONDELLE	WASHER	SCHEIBE	ARANDELLA
	2145.17303	4	RONDELLA	RONDELLE	WASHER	SCHEIBE	ARANDELLA
	2200.70321	8	RIVETTO	RIVET	RIVET	NIET	RIVETE
	10500.55439.01	8	VITE	VIS	SCREW	SCHRAUBE	TORNILLO
	10541.55763.00	2	GANCIO	CROCHET	CATCH	HAKEN	GANCHO
	10544.55675.02	4	CARRUCOLA	GALET	SHEAVE	FLASCHENZUG	POLEA
	11608.55676.00	4	PERNO	AXE	PIVOT PIN	ZAPFEN	PERNO
	11610.55023.20	2	ALZACRISTALLO	LEVE-GLACE	WINDOW REGULATOR	SCHEIBENHEBER	ALZACRISTALES
	11610.55078.10	1	SERRAT.D.SAFE GS	SERRURE	LOCK	SCHLOSS	CERRADURA
	11610.55078.20	1	SERRAT.D.SESSA GS	SERRURE	LOCK	SCHLOSS	CERRADURA
	11610.55079.10	1	SERRAT.S.SAFE GS	SERRURE	LOCK	SCHLOSS	CERRADURA
	11610.55079.20	1	SERRAT.S.SESSA GS	SERRURE	LOCK	SCHLOSS	CERRADURA
	11610.55748.00	2	SQUADRETTA	GOUSSET	BRACKET	WINKELSTUECK	ESCUADRITA
	11610.60081.00	2	ASTA	TIGE	ROD	STANGE	ASTA
	11611.55078.10	1	SERRAT.D.SAFE GD	SERRURE	LOCK	SCHLOSS	CERRADURA
	11611.55078.20	1	SERRAT.D.SESSA GD	SERRURE	LOCK	SCHLOSS	CERRADURA
	11611.55079.10	1	SERRAT.S.SAFE GD	SERRURE	LOCK	SCHLOSS	CERRADURA
	11611.55079.20	1	SERRAT.S.SESSA GD	SERRURE	LOCK	SCHLOSS	CERRADURA

SERRATURE ALZACRISTALLI E PROFILATI PORTE ANTERIORI
SERRURES-LEVE-GLACE ET PROFILS DE PORTES AVANT
FRONT DOOR LOCKS WINDOW REGULATORS AND MOULDINGS
SCHLÖSSER-FENSTERHEBER U. ZIERLEISTEN DER FAHRERTUEREN
CERRADURAS-ELEVADORES CRISTALES Y PERFILES DE LAS PUERTAS ANTERIORES

TAV. 67.02/1

1ª EDIZIONE 1ère EDITION 1st EDITION AUSGABE EDICION — APRILE AVRIL APRIL APRIL ABRIL 1974

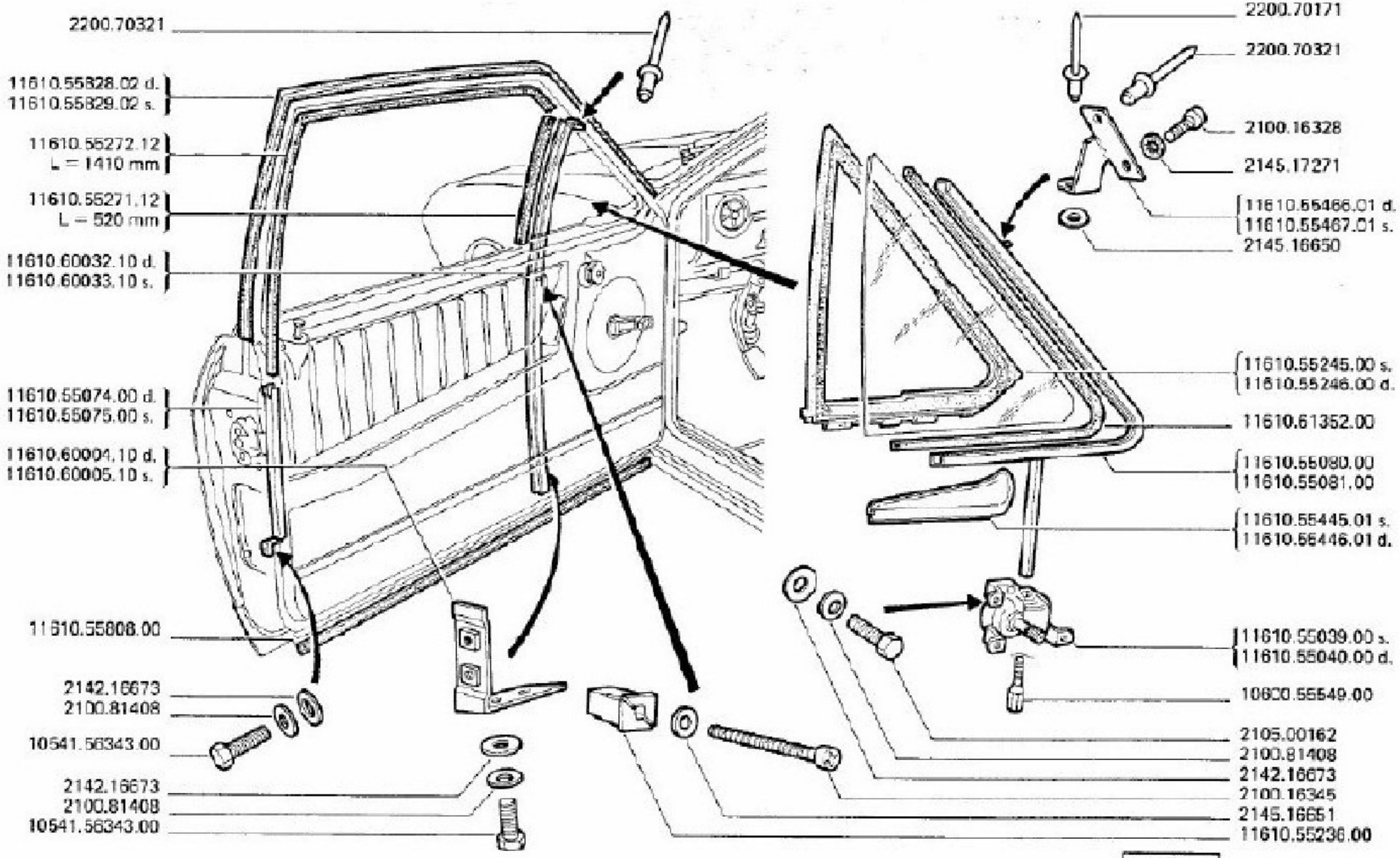

TAV. 67.02/L

SERRATURE-ALZACRISTALLI E PROFILATI PORTE ANTERIORI
SERRURES-LEVE-GLACE ET PROFILS DE PORTES AVANT
FRONT DOOR LOCKS WINDOW REGULATORS AND MOULDINGS
SCHLOESSER-FENSTERHEBER U.ZIERLEISTEN DER FAHRERTUEREN
CERRADURAS-ELEVADORES CRISTALES Y PERFILES DE LAS PUERTAS ANTER.

MODIFICA	N. ORDINAZIONE	QT.	DENOMINAZIONE	DÉSIGNATION	DESCRIPTION	BENENNUNG	DENOMINACIONES
	2100.16328	2	VITE	VIS	SCREW	SCHRAUBE	TORNILLO
	2100.16345	2	VITE	VIS	SCREW	SCHRAUBE	TORNILLO
	2100.81408	10	RONDELLA	RONDELLE	WASHER	SCHEIBE	ARANDELLA
	2105.00162	6	VITE	VIS	SCREW	SCHRAUBE	TORNILLO
	2142.16673	10	RONDELLA	RONDELLE	WASHER	SCHEIBE	ARANDELLA
	2145.16650	2	RONDELLA	RONDELLE	WASHER	SCHEIBE	ARANDELLA
	2145.16651	2	RONDELLA	RONDELLE	WASHER	SCHEIBE	ARANDELLA
	2145.17271	2	RONDELLA	RONDELLE	WASHER	SCHEIBE	ARANDELLA
	2200.70171	2	RIVETTO	RIVET	RIVET	NIET	RIVETE
	2200.70321	6	RIVETTO	RIVET	RIVET	NIET	RIVETE
	10541.56343.00	4	VITE	VIS	SCREW	SCHRAUBE	TORNILLO
	10600.55549.00	2	VITE	VIS	SCREW	SCHRAUBE	TORNILLO
	11610.55039.00	1	COMANDO VOLETTO S.	COMMANDE	LINK	DREHVERSCHLUSS	SISTEMA
	11610.55040.00	1	COMANDO VOLETTO D.	COMMANDE	LINK	DREHVERSCHLUSS	SISTEMA
	11610.55074.00	1	GUIDACRISTALLO D.	COULISSE DE VITRE	GLASS GUIDE	FENSTERFUEHRSCHIENE	GUIA CRISTAL
	11610.55075.00	1	GUIDACRISTALLO S.	COULISSE DE VITRE	GLASS GUIDE	FENSTERFUEHRSCHIENE	GUIA CRISTAL
	11610.55080.00	1	TELAIO VOLETTO D.	CADRE VOLET DEFLECT.	VENT WINDOW FRAME	SCHWENKFENSTERRAHMEN	BASTIDOR VENTILADOR
	11610.55081.00	1	TELAIO VOLETTO S.	CADRE VOLET DEFLECT.	VENT WINDOW FRAME	SCHWENKFENSTERRAHMEN	BASTIDOR VENTILADOR
	11610.55236.00	4	BOCCOLA	BAGUE	BUSHING	BUECHSE	CASQUILLO
	11610.55245.00	1	GUARNIZIONE S.	JOINT	GASKET	DICHTUNG	JUNTA
	11610.55246.00	1	GUARNIZIONE D.	JOINT	GASKET	DICHTUNG	JUNTA

SERRATURE ALZACRISTALLI E PROFILATI PORTE ANTERIORI
SERRURES-LEVE-GLACE ET PROFILS DE PORTES AVANT
FRONT DOOR LOCKS WINDOW REGULATORS AND MOULDINGS
SCHLÖSSER-FENSTERHEBER U. ZIERLEISTEN DER FAHRERTUEREN
CERRADURAS-ELEVADORES CRISTALES Y PERFILES DE LAS PUERTAS ANTERIORES

TAV. 67.02/1

1	EDIZIONE	APRILE	1974
	EDITION	AVRIL	
	EDITION	APRIL	
	AUSGABE	APRIL	
	EDICION	ABRIL	

DATA SUCCESSIVA AGGIORNAMENTO

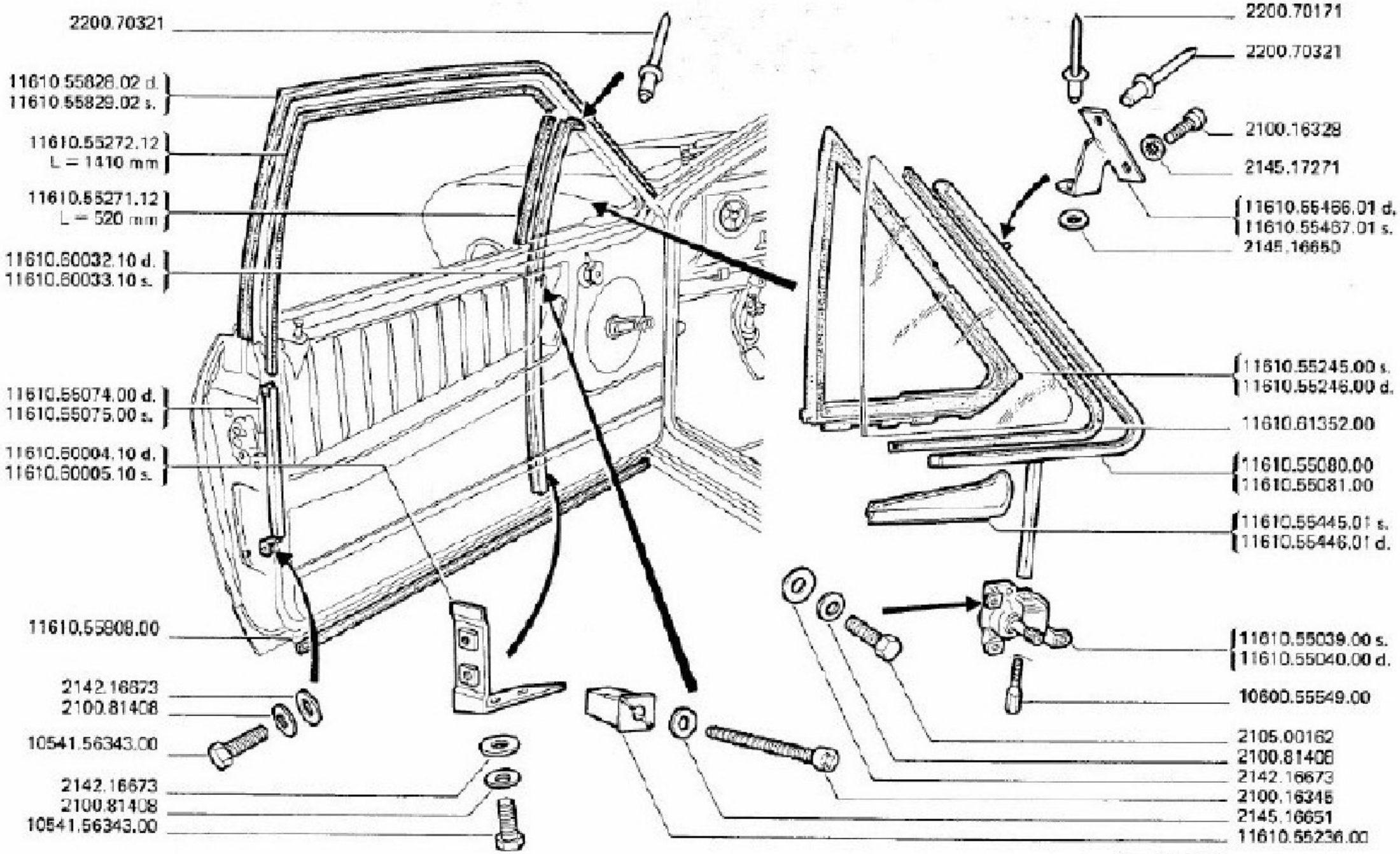

N. 7014

Alfetta GT

PAG. 435

TAV. 67.02/1

SERRATURE-ALZACRISTALLI E PROFILATI PORTE ANTERIORI
SERRURES-LEVE-GLACE ET PROFILS DE PORTES AVANT
FRONT DOOR LOCKS WINDOW REGULATORS AND MOULDINGS
SCHLOESSER-FENSTERHEBER U.ZIERLEISTEN DER FAHRERTUEREN
CERRADURAS-ELEVADORES CRISTALES Y PERFILES DE LAS PUERTAS ANTER.

MODIFICA	N. ORDINAZIONE	QT.	DENOMINAZIONE	DESIGNATION	DESCRIPTION	BENENNUNG	DENOMINACIONES
	11610.55271.12	0	PROFILATO	JOINT D ETANCHEITE	WEATHERSTRIP	DICHTUNGSRAHMEN	PERFIL GOMA
	11610.55272.12	0	PROFILATO	JOINT D ETANCHEITE	WEATHERSTRIP	DICHTUNGSRAHMEN	PERFIL GOMA
	11610.55445.01	1	GOCCIOLATOIO S.	GOUTTIERE	GUTTER	TROPFENFAENGER	COLECTOR
	11610.55446.01	1	GOCCIOLATOIO D.	GOUTTIERE	GUTTER	TROPFENFAENGER	COLECTOR
	11610.55466.01	1	SQUADRETTA D.	GOUSSET	BRACKET	WINKELSTUECK	ESCUADRITA
	11610.55467.01	1	SQUADRETTA S.	GOUSSET	BRACKET	WINKELSTUECK	ESCUADRITA
	11610.55808.00	1	GUARNIZIONE INF.	JOINT D ETANCHEITE	SEAL	DICHTUNG	GUARNICION
	11610.55828.02	1	GUARNIZIONE PORTA D.	JOINT D ETANCHEITE	SEAL	DICHTUNG	GUARNICION
	11610.55829.02	1	GUARNIZIONE PORTA S.	JOINT D ETANCHEITE	SEAL	DICHTUNG	GUARNICION
	11610.60004.10	1	SQUADRETTA D.	GOUSSET	BRACKET	WINKELSTUECK	ESCUADRITA
	11610.60005.10	1	SQUADRETTA S.	GOUSSET	BRACKET	WINKELSTUECK	ESCUADRITA
	11610.60032.10	1	GUIDACRISTAL. MONT.D	COULISSE DE VITRE	GLASS GUIDE	FENSTERFUEHRSCHIENE	GUIA CRISTAL
	11610.60033.10	1	GUIDACRISTAL.MONT.S.	COULISSE DE VITRE	GLASS GUIDE	FENSTERFUEHRSCHIENE	GUIA CRISTAL
	11610.61352.00	2	PROFILATO VOLETTO	JOINT D ETANCHEITE	WEATHERSTRIP	DICHTUNGSRAHMEN	PERFIL GOMA

PANNELLI INTERNI E CORNICI PORTE ANTERIORI
PANNEAUX INTERIEURS ET PROFILS ENJOLIVEURS DE PORTES AVANT
FRONT DOOR TRIM PANELS AND MOULDINGS
BELAEGE UND RAHMEN DER FAHRERTUEREN
PANELES INTERIORES Y MARCOS PUERTAS ANTERIORES

TAV. 67.03

1ª	EDIZIONE	1974	APRILE
1st	EDITION		AVRIL
1st	EDITION		APRIL
	AUSGABE		APRIL
1ère	EDICION		ABRIL

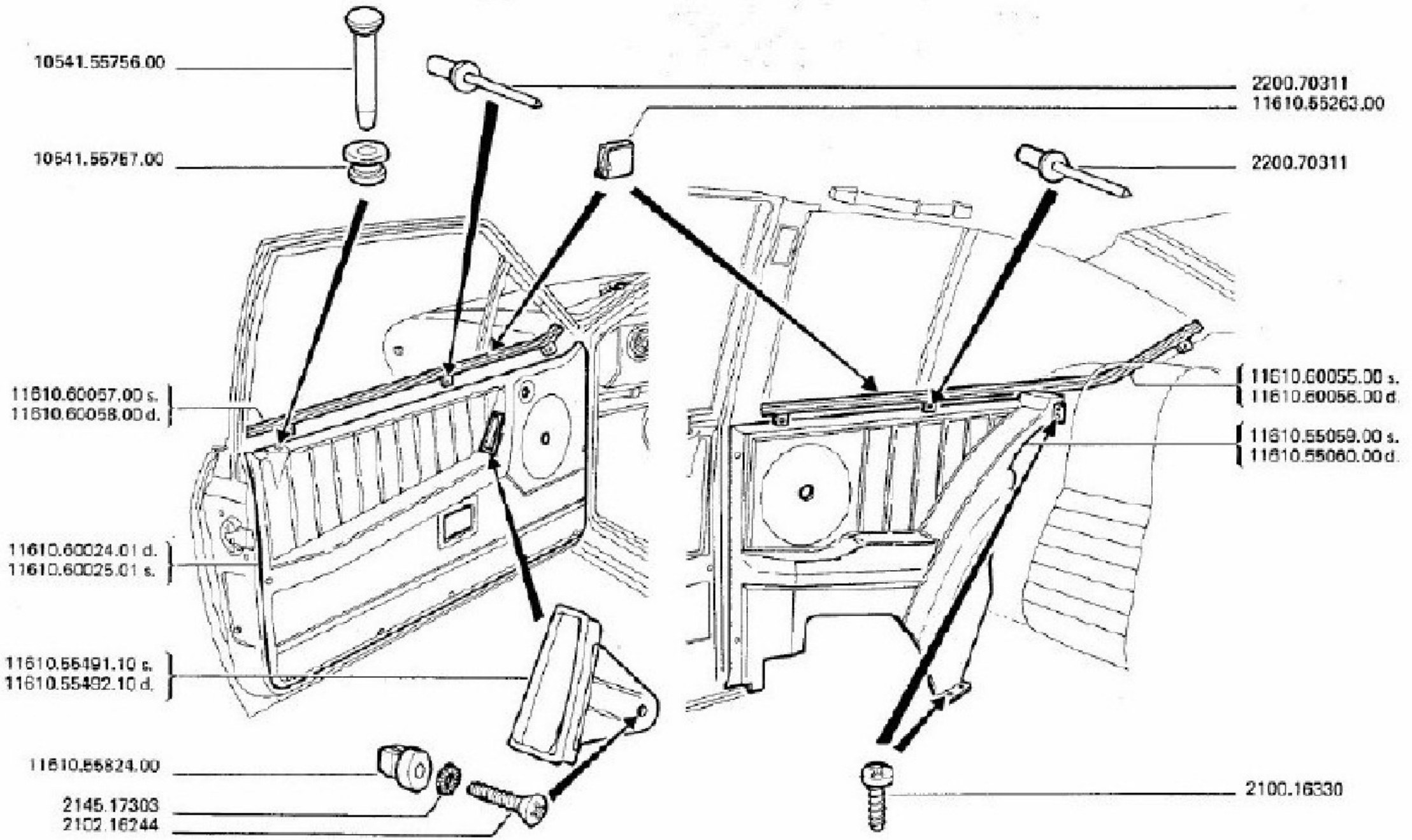

TAV. 67.03/0

PANNELLI INTERNI E CORNICI PORTE ANTERIORI
PANNEAUX INTERIEURS ET PROFILS ENJOLIVEURS DE PORTES AVANT
FRONT DOOR TRIM PANELS AND MOULDINGS
BELAEGE UND RAHMEN DER FAHRERTUEREN
PANELES INTERIORES Y MARCOS PUERTAS ANTERIORES

MODIFICA	N. ORDINAZIONE	QT.	DENOMINAZIONE	DESIGNATION	DESCRIPTION	BENENNUNG	DENOMINACIONES
	2100.16330	10	VITE	VIS	SCREW	SCHRAUBE	TORNILLO
	2102.16244	4	VITE	VIS	SCREW	SCHRAUBE	TORNILLO
	2145.17303	4	RONDELLA	RONDELLE	WASHER	SCHEIBE	ARANDELLA
	2200.70311	6	RIVETTO	RIVET	RIVET	NIET	RIVETE
	10541.55756.00	2	PULSANTE	BOUTON-POUSSOIR	PUSH BUTTON	DRUCKKNOPF	PULSANTE
	10541.55757.00	2	BOCCOLA	BAGUE	BUSHING	BUECHSE	CASQUILLO
	11610.55059.00	1	PANNELLO FIANCATA S.	PANNEAU	PANEL	TUERBELAG	PANEL
	11610.55060.00	1	PANNELLO FIANCATA D.	PANNEAU	PANEL	TUERBELAG	PANEL
	11610.55263.00	28	MOLLETTA	AGRAFE	CLIP	KLEMMSTUECK	MUELLECITO
	11610.55491.10	1	MANIGLIA S.	POIGNEE	HANDLE	TUERGRIFF	MANILLA
	11610.55492.10	1	MANIGLIA D.	POIGNEE	HANDLE	TUERGRIFF	MANILLA
	11610.55824.00	4	BLOCCHETTO	TAQUET	PAD	SPANNSTUECK	MULETILLA
	11610.60024.01	1	PANNELLO PORTA D.	PANNEAU	PANEL	TUERBELAG	PANEL
	11610.60025.01	1	PANNELLO PORTA S.	PANNEAU	PANEL	TUERBELAG	PANEL
	11610.60055.00	1	CORNICE POST.S.	MONTURE	FRAME	RAHMEN	MARCO
	11610.60056.00	1	CORNICE POST.D.	MONTURE	FRAME	RAHMEN	MARCO
	11610.60057.00	1	CORNICE ANT.S.	MONTURE	FRAME	RAHMEN	MARCO
	11610.60058.00	1	CORNICE ANT.D.	MONTURE	FRAME	RAHMEN	MARCO

PARTICOLARI VANO PORTE
DETAIL DE L'OUVERTURE DE PORTE
DOOR OPENING DETAILS
EINZELTEILE DES TÜRRAHMENS
DETALLE DEL MARCO PUERTAS

TAV. 67.30

1ª EDIZIONE APRILE 1974
1ère EDITION AVRIL
1st EDITION APRIL
1. AUSGABE APRIL
1ra EDICION ABRIL

11610.62124.00

11606.53458.00

11600.53092.02

2100.92606

11610.62126.30
11610.62127.30

TAV. 67.30/0

PARTICOLARI VANO PORTE
DETAIL DE L OUVERTURE DE PORTE
DOOR OPENING DETAILS
EINZELTEILE DES TURRAHMENS
DETALLE DEL MARCO PUERTAS

MODIFICA	N. ORDINAZIONE	QT.	DENOMINAZIONE	DESIGNATION	DESCRIPTION	BENENNUNG	DENOMINACIONES
	2100.92606	4	DADO	ECROU	NUT	MUTTER	TUERCA
	11600.53092.02	1	TIRANTE	BIELLETTE	ROD	ZUGSTANGE	TIRANTE
	11608.53458.00	2	SPINA	BROCHE	PIN	STIFT	ESPINA
	11610.62124.00	2	PROFILATO PORTA	JOINT D ETANCHEITE	WEATHERSTRIP	DICHTUNGSRAMEN	PERFIL GOMA
	11610.62126.30	1	PROFILATO POST.D.	JOINT D ETANCHEITE	WEATHERSTRIP	DICHTUNGSRAMEN	PERFIL GOMA
	11610.62127.30	1	PROFILATO POST.S.	JOINT D ETANCHEITE	WEATHERSTRIP	DICHTUNGSRAMEN	PERFIL GOMA

SEDILI ANTERIORI
SIEGES AVANT
FRONT SEATS
VORDERSITZE
ASIENTOS ANTERIORES

TAV. 68.00

1ª	EDIZIONE	1974	APRILE
1re	EDITION		AVRIL
1st	EDITION		APRIL
1.	AUSGABE		APRIL
1ª	EDICION		ABRIL

DATA ULTIMO AGGIORNAMENTO

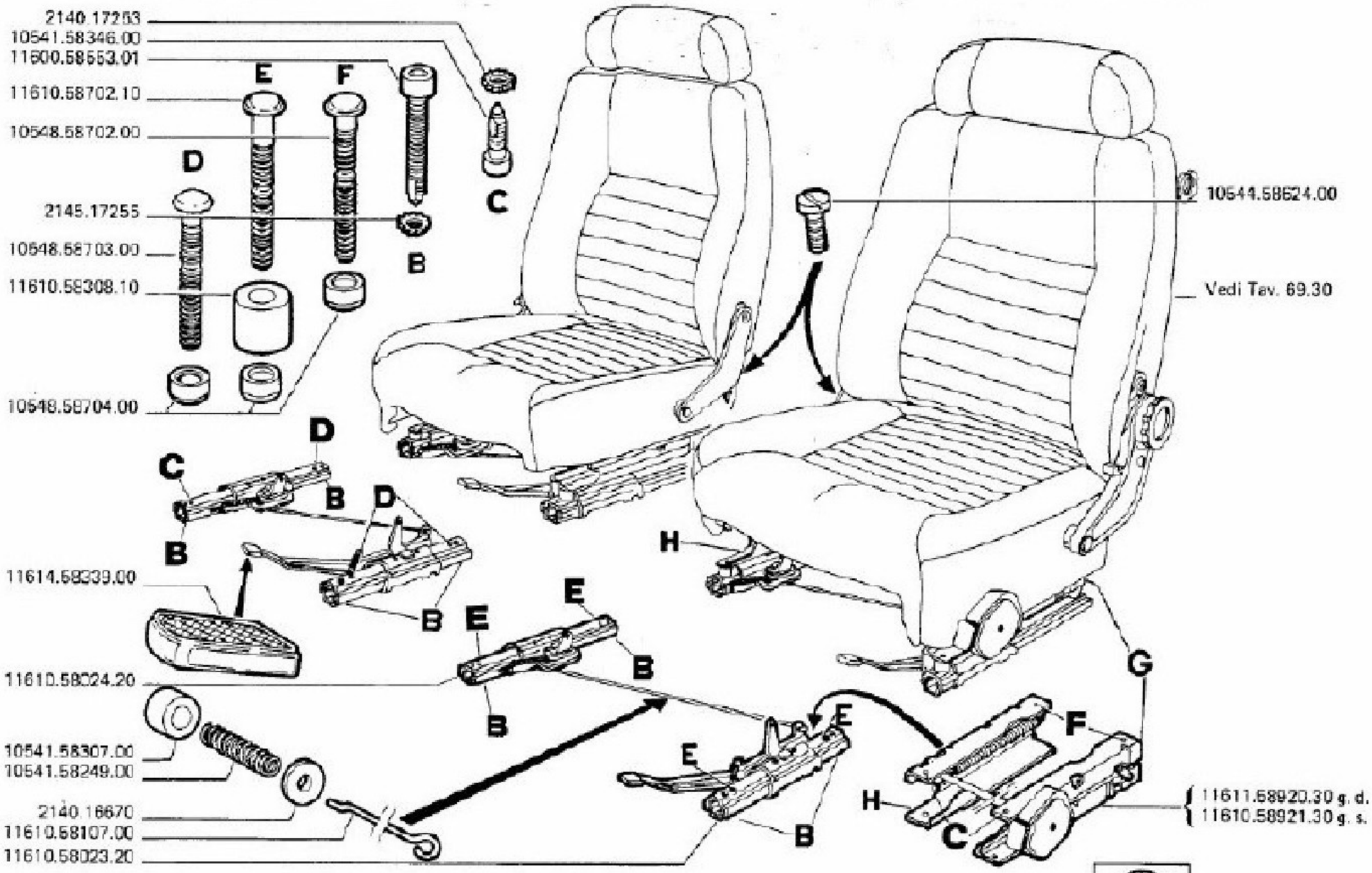

TAV. 68.0070

SEDILI ANTERIORI
SIEGES AVANT
FRONT SEATS
VORDERSITZE
ASIENTOS ANTERIORES

MODIFICA	N. ORDINAZIONE	QT.	DENOMINAZIONE	DESIGNATION	DESCRIPTION	BENENNUNG	DENOMINACIONES
	2140.16670	8	RONDELLA	RONDELLE	WASHER	SCHEIBE	ARANDELLA
	2140.17253	3	RONDELLA	RONDELLE	WASHER	SCHEIBE	ARANDELLA
	2140.17255	4	RONDELLA	RONDELLE	WASHER	SCHEIBE	ARANDELLA
	10541.58249.00	2	MOLLA	RESSORT	SPRING	FEDER	MUELLE
	10541.58307.00	2	DISTANZIALE	ENTRETOISE	SPACER	ABSTANDSTUECK	SEPARADOR
	10541.58346.00	3	VITE	VIS	SCREW	SCHRAUBE	TORNILLO
	10544.58624.00	2	VITE REGOLAZIONE	ENTRETOISE	SPACER	ABSTANDSTUECK	SEPARADOR
	10548.58702.00	2	BULLONE HUCK	VIS	SCREW	SCHRAUBE	TORNILLO
	10548.58703.00	3	BULLONE HUCK	VIS	SCREW	SCHRAUBE	TORNILLO
	10548.58704.00	6	COLLARE	COLLIER	STRAP	RING	COLLAR
	11600.58553.01	4	VITE	VIS	SCREW	SCHRAUBE	TORNILLO
	11610.58023.20	2	SCORREVOLE S.	GLISSIERE	RUNNER	GLEITMUFFE	CORREDIZO
	11610.58024.20	2	SCORREVOLE D.	GLISSIERE	RUNNER	GLEITMUFFE	CORREDIZO
	11610.58107.00	2	ASTA COLLEGAMENTO	TIGE	ROD	STANGE	ASTA
	11610.58308.10	4	DISTANZIALE	ENTRETOISE	SPACER	ABSTANDSTUECK	SEPARADOR
	11610.58702.10	4	BULLONE HUCK	VIS	SCREW	SCHRAUBE	TORNILLO
	11610.58921.30	1	MECCANISMO SED.S.GS	MECANISME	MECHANISM	MECHANISMUS	MECANISMO
	11611.58920.30	1	MECCANISMO SED.D.GD	MECANISME	MECHANISM	MECHANISMUS	MECANISMO
	11614.58339.00	2	POMELLO	BOUTON	KNOB	KNOPF	LLAVE

SEDILI ANTERIORI
SIEGES AVANT
FRONT SEATS
VORDERSITZE
ASIENTOS ANTERIORES

TAV. 68.00/1

1ª	EDIZIONE	APRILE	1974
1st	EDITION	APRIL	
1e	EDITION	AVRIL	
1.	AUSGABE	APRIL	
1st	EDICION	ABRIL	

DATA DEGLI AGGIORNAMENTI

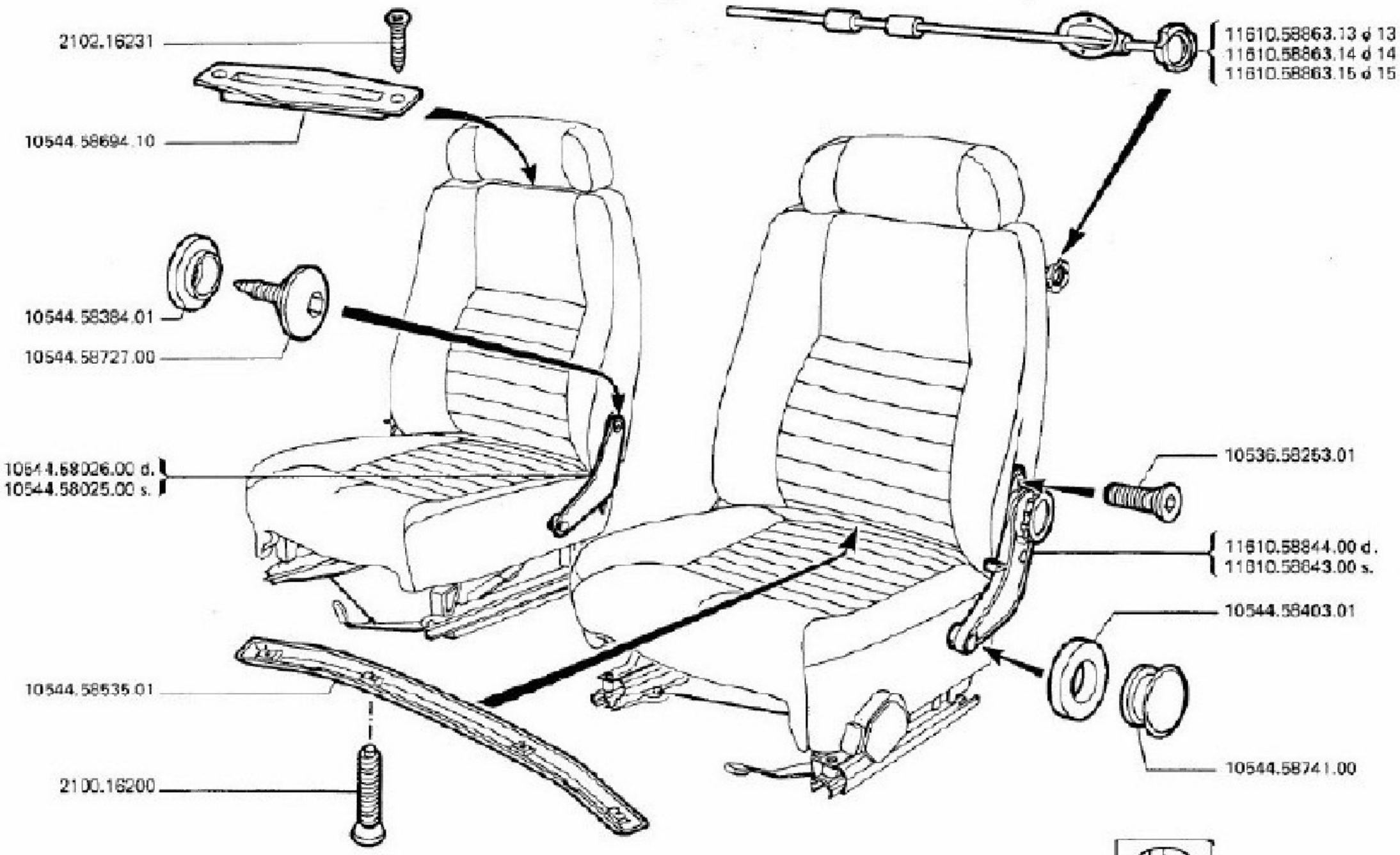

TAV. 68.00/1

SEDILI ANTERIORI
SIEGES AVANT
FRONT SEATS
VORDERSITZE
ASIENTOS ANTERIORES

MODIFICA	N. ORDINAZIONE	QT.	DENOMINAZIONE	DÉSIGNATION	DESCRIPTION	BENENNUNG	DENOMINACIONES
	2100.16200	8	VITE	VIS	SCREW	SCHRAUBE	TORNILLO
	2102.16231	4	VITE	VIS	SCREW	SCHRAUBE	TORNILLO
	10536.58253.01	4	VITE	VIS	SCREW	SCHRAUBE	TORNILLO
	10544.58025.00	1	PIASTRA S.	PLAQUE	PLATE	PLATTE	PLACA
	10544.58026.00	1	PIASTRA D.	PLAQUE	PLATE	PLATTE	PLACA
	10544.58384.01	2	BOCCOLA	BAGUE	BUSHING	BUECHSE	CASQUILLO
	10544.58403.01	4	RONDELLA	RONDELLE	WASHER	SCHEIBE	ARANDELLA
	10544.58535.01	2	PROFILATO	ENJOLIVEUR	MOULDING	PROFIL	PERFIL
	10544.58694.10	2	MOSTRINA	MOTIF	ORNAMENT	ZIERUNTERLAGE	DISTINTIVO
	10544.58727.00	2	VITE	VIS	SCREW	SCHRAUBE	TORNILLO
	10544.58741.00	2	TAMPONE	BLOC CAOUTCHOUC	RUBBER PAD	PUFFER	TAMPON
	11610.58843.00	1	MECCANISMO	MECANISME	MECHANISM	MECHANISMUS	MECANISMO
	11610.58844.00	1	MECCANISMO	MECANISME	MECHANISM	MECHANISMUS	MECANISMO
	11610.58863.13	2	ALBERINO	AXE	SPINDLE	WELLE	EJE
	11610.58863.14	2	ALBERINO	AXE	SPINDLE	WELLE	EJE
	11610.58863.15	2	ALBERINO	AXE	SPINDLE	WELLE	EJE

1ª EDIZIONE 1ª EDITION 1ª EDITION 1ª AUSGABE 1ª EDICION — APRILE APRIL APRIL APRIL ABRIL — 1974

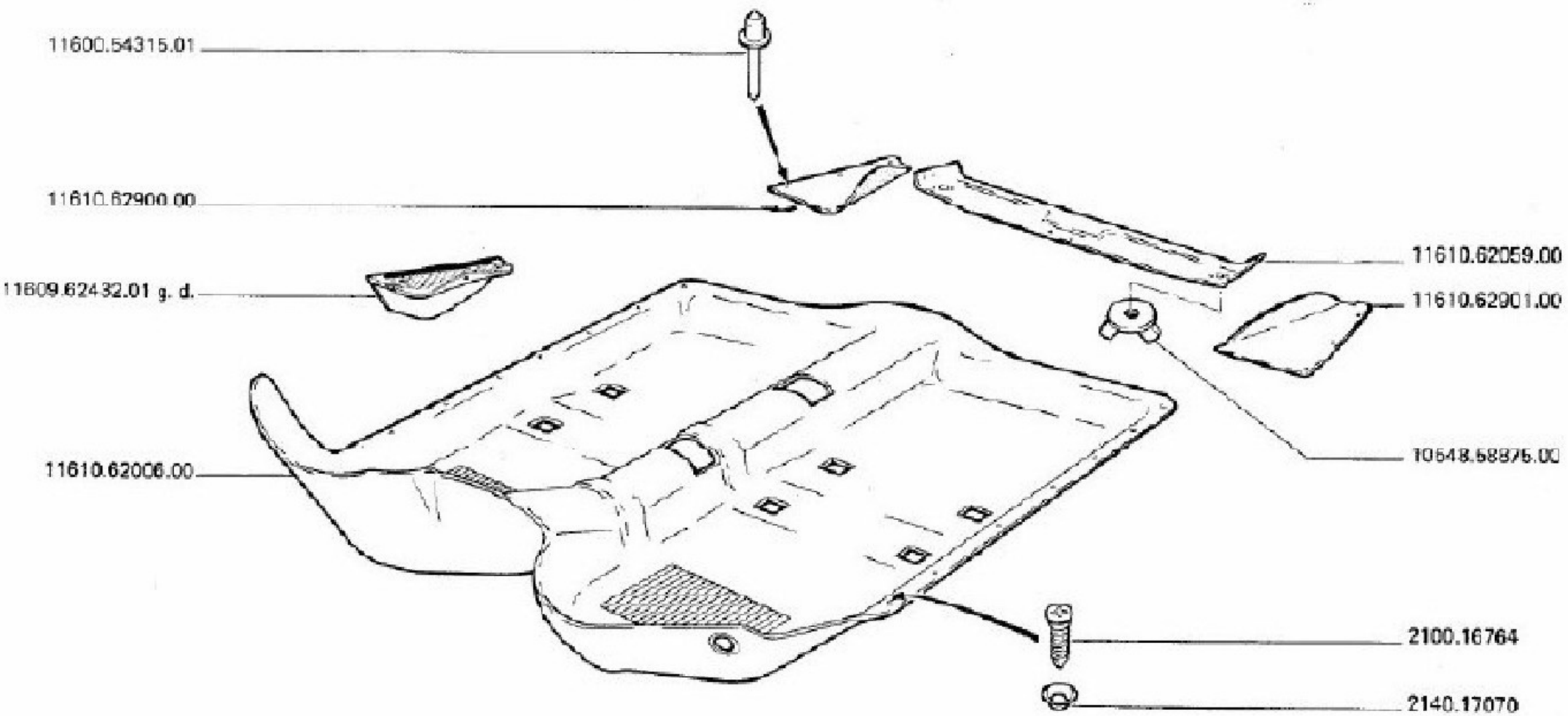

TAV. 69.00/0

TAPPETI
TAPIS
CARPENTING
TEPPICHE
ALFOMBRAS

MODIFICA	N. ORDINAZIONE	QT.	DENOMINAZIONE	DESIGNATION	DESCRIPTION	BENENNUNG	DENOMINACIONES
	2100.16764	14	VITE	VIS	SCREW	SCHRAUBE	TORNILLO
	2140.17070	14	RONDELLA	RONDELLE	WASHER	SCHEIBE	ARANDELLA
	10548.58875.00	4	GALLETTO	ECROU A OREILLES	WING NUT	FLUEGELMUTTER	TUERCA DE ALETAS
	11600.54315.01	6	RIVETTO	RIVET	RIVET	NIET	RIVETE
	11609.62432.01	1	PEDANA GD	MARCHEPIED	FOOT BOARD	TRITTBRETT	PELDAÑO
	11610.62006.00	1	TAPPETO	TAPIS	CARPET	TEPPICH	ALFOMBRA
	11610.62059.00	1	RIPIANO POST.CENTR.	PALIER	REAR WINDSCR. SHELF	ABLAGEFACH	CAJON
	11610.62900.00	1	RIPIANO POST.LAT.D.	PALIER	REAR WINDSCR. SHELF	ABLAGEFACH	CAJON
	11610.62901.00	1	RIPIANO POST.LAT.S.	PALIER	REAR WINDSCR. SHELF	ABLAGEFACH	CAJON

RIVESTIMENTI ISOLANTI
REVETEMENTS ISOLANTS
INSULATING COVERING
ISOLIERUNG
RIVESTIMIENTOS AISLANTES

TAV. 69.10

1ª EDIZIONE APRILE
1ère EDITION AVRIL
1st EDITION APRIL
1. AUSGABE APRIL
1ª EDICION ABRIL
1974

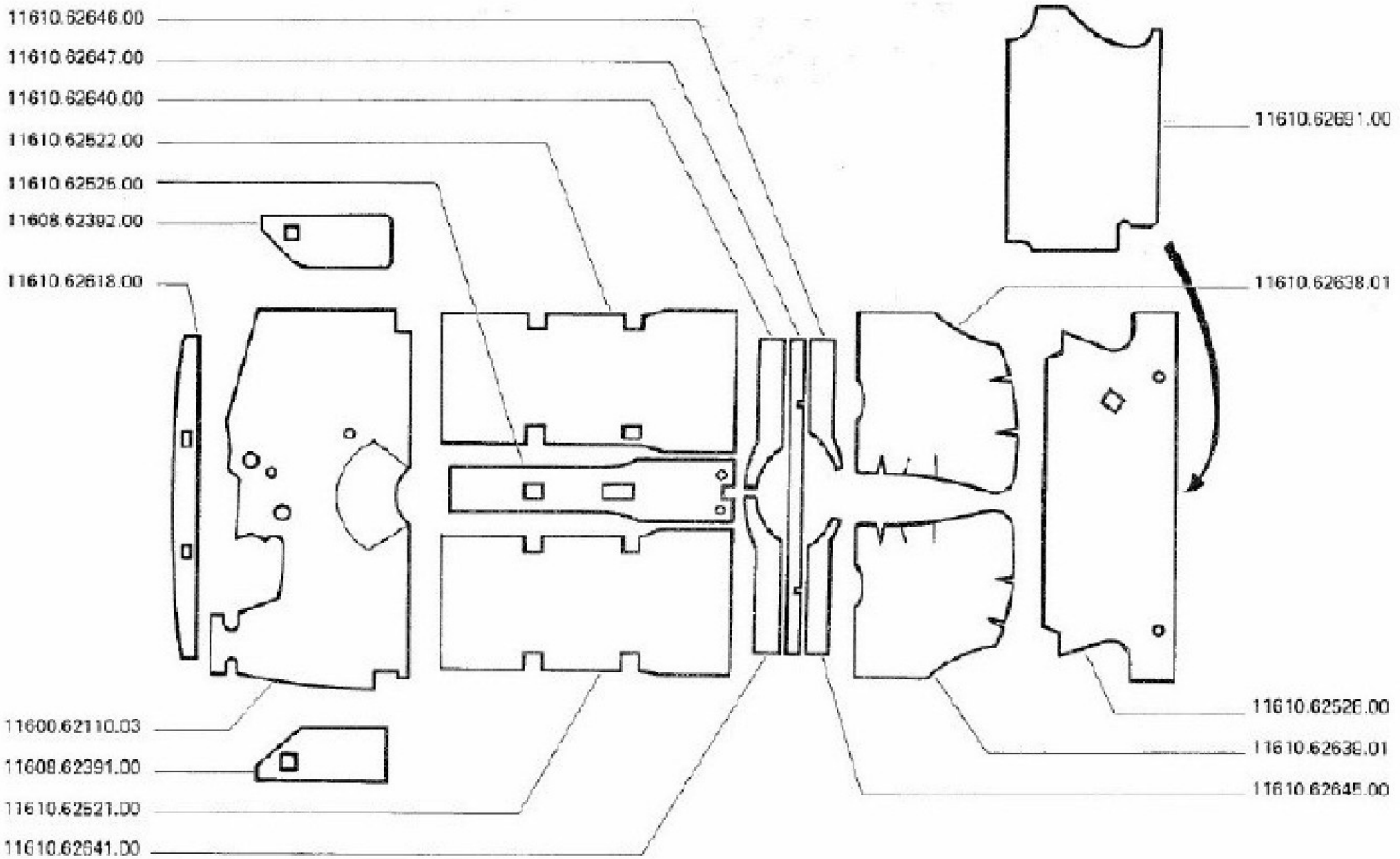

TAV. 69.10/0

RIVESTIMENTI ISOLANTI
REVETEMENTS ISOLANTS
INSULATING COVERING
ISOLIERUNG
RIVESTIMIENTOS AISLANTES

MODIFICA	N. FORMAZIONE	QT	DENOMINAZIONE	DESIGNATION	DESCRIPTION	BENENNUNG	DENOMINACIONES
	11600.62110.03	L	ISOLANTE CRUSCOTTO	ISOLANT	INSULATOR	ISOLIERSTOFF	AISLANTE
	11608.62391.00	L	ISOLANTE ANT.S.	ISOLANT	INSULATOR	ISOLIERSTOFF	AISLANTE
	11608.62392.00	L	ISOLANTE ANT.D.	ISOLANT	INSULATOR	ISOLIERSTOFF	AISLANTE
	11610.62521.00	L	ISOLAN.PAVIMEN.S.	ISOLANT	INSULATOR	ISOLIERSTOFF	AISLANTE
	11610.62522.00	1	ISOLAN.PAVIMEN.D.	ISOLANT	INSULATOR	ISOLIERSTOFF	AISLANTE
	11610.62525.00	1	ISOLAN.COPRITRASM.	ISOLANT	INSULATOR	ISOLIERSTOFF	AISLANTE
	11610.62528.00	1	ISOLAN.PARATIA POST.	ISOLANT	INSULATOR	ISOLIERSTOFF	AISLANTE
	11610.62618.00	1	ISOLAN.CRUSC.SUP.	ISOLANT	INSULATOR	ISOLIERSTOFF	AISLANTE
	11610.62638.01	1	ISOLAN.SEDILE POST.D	ISOLANT	INSULATOR	ISOLIERSTOFF	AISLANTE
	11610.62639.01	1	ISOLAN.SEDILE POST.S	ISOLANT	INSULATOR	ISOLIERSTOFF	AISLANTE
	11610.62640.00	1	ISOLAN.POST.D.	ISOLANT	INSULATOR	ISOLIERSTOFF	AISLANTE
	11610.62641.00	1	ISOLAN.POST.S.	ISOLANT	INSULATOR	ISOLIERSTOFF	AISLANTE
	11610.62645.00	1	ISOLAN.POST.S.	ISOLANT	INSULATOR	ISOLIERSTOFF	AISLANTE
	11610.62646.00	1	ISOLAN.POST.D.	ISOLANT	INSULATOR	ISOLIERSTOFF	AISLANTE
	11610.62647.00	1	ISOLAN.POST.SUP.	ISOLANT	INSULATOR	ISOLIERSTOFF	AISLANTE
	11610.62691.00	1	ISOLAN.BAGAGLIERA	ISOLANT	INSULATOR	ISOLIERSTOFF	AISLANTE

TAPPETI DELLA BAGAGLIERA
TAPIS DE COFFRE A BAGAGES
TRUNK MATS
KOFFERRAUMBELAG
ALFOMBRAS DEL PORTAEQUIPAJES

TAV. 69.20

1 EDIZIONE / EDITION / EDITION / AUSGABE / EDICION — 1974 — APRILE / AVRIL / APRIL / APRIL / ABRIL

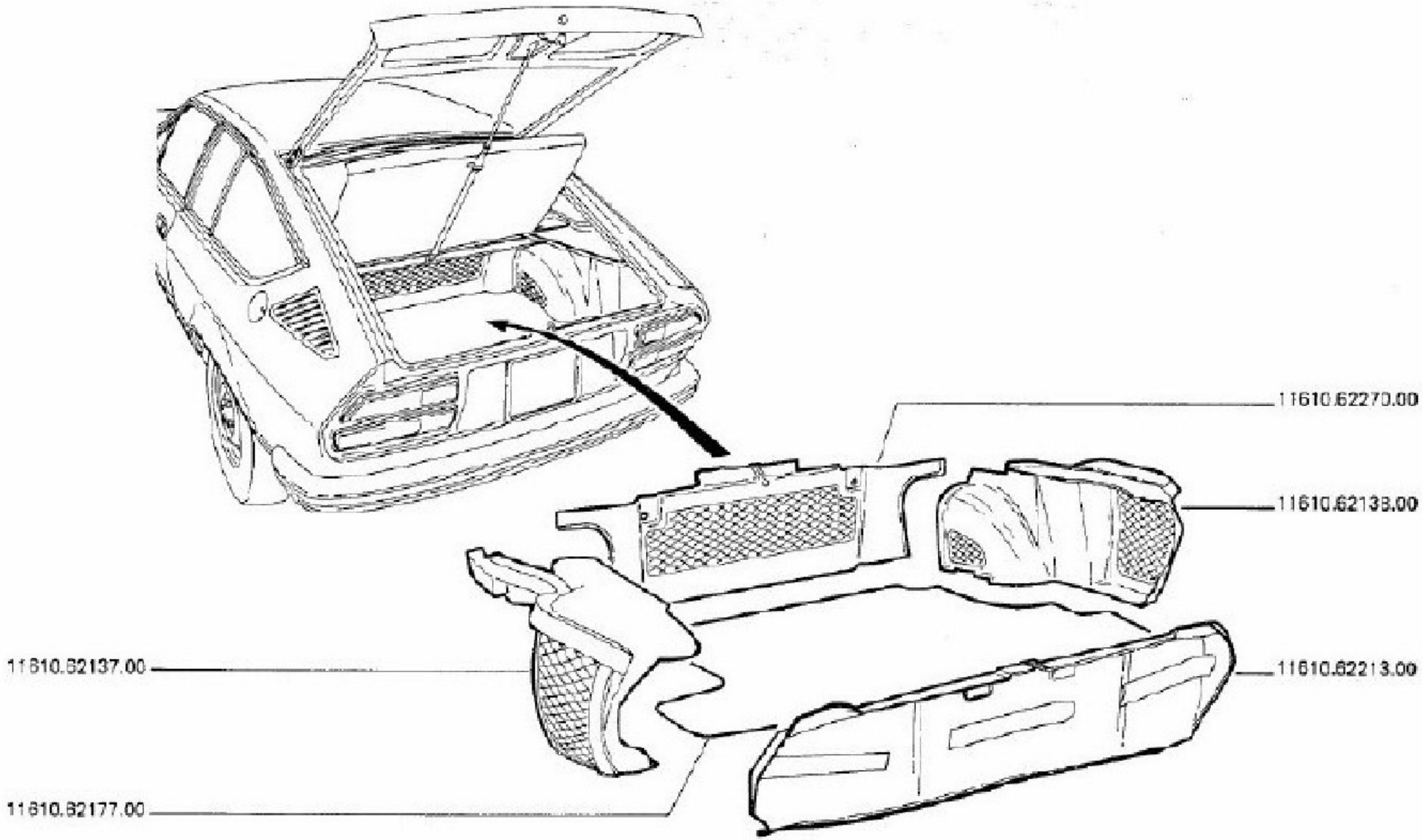

N. 6006

Alfetta GL

TAV. 69.20/0

TAPPETI DELLA BAGAGLIERA
TAPIS DE COFFRE A BAGAGES
TRUNK MATS
KOFFERRAUMBELAG
ALFOMBRAS DEL PORTAEQUIPAJES

MODIFICA	N. ORDINAZIONE	QT.	DENOMINAZIONE	DESIGNATION	DESCRIPTION	BENENNUNG	DENOMINACION
	11610.62137.00	1	TAPPETO PASSAR.S.	TAPIS	CARPET	TEPPICH	ALFOMBRA
	11610.62138.00	1	TAPPETO PASSAR.D.	TAPIS	CARPET	TEPPICH	ALFOMBRA
	11610.62177.00	1	TAPPETO PAVIMENTO	TAPIS	CARPET	TEPPICH	ALFOMBRA
	11610.62213.00	1	TAPPETO POST.	TAPIS	CARPET	TEPPICH	ALFOMBRA
	11610.62270.00	1	TAPPETO DORSALE	TAPIS	CARPET	TEPPICH	ALFOMBRA

1ª EDIZIONE APRILE 1974
1ère EDITION AVRIL
1st EDITION APRIL
1. AUSGABE APRIL
1ª EDICION ABRIL
DATA DI STAMPO

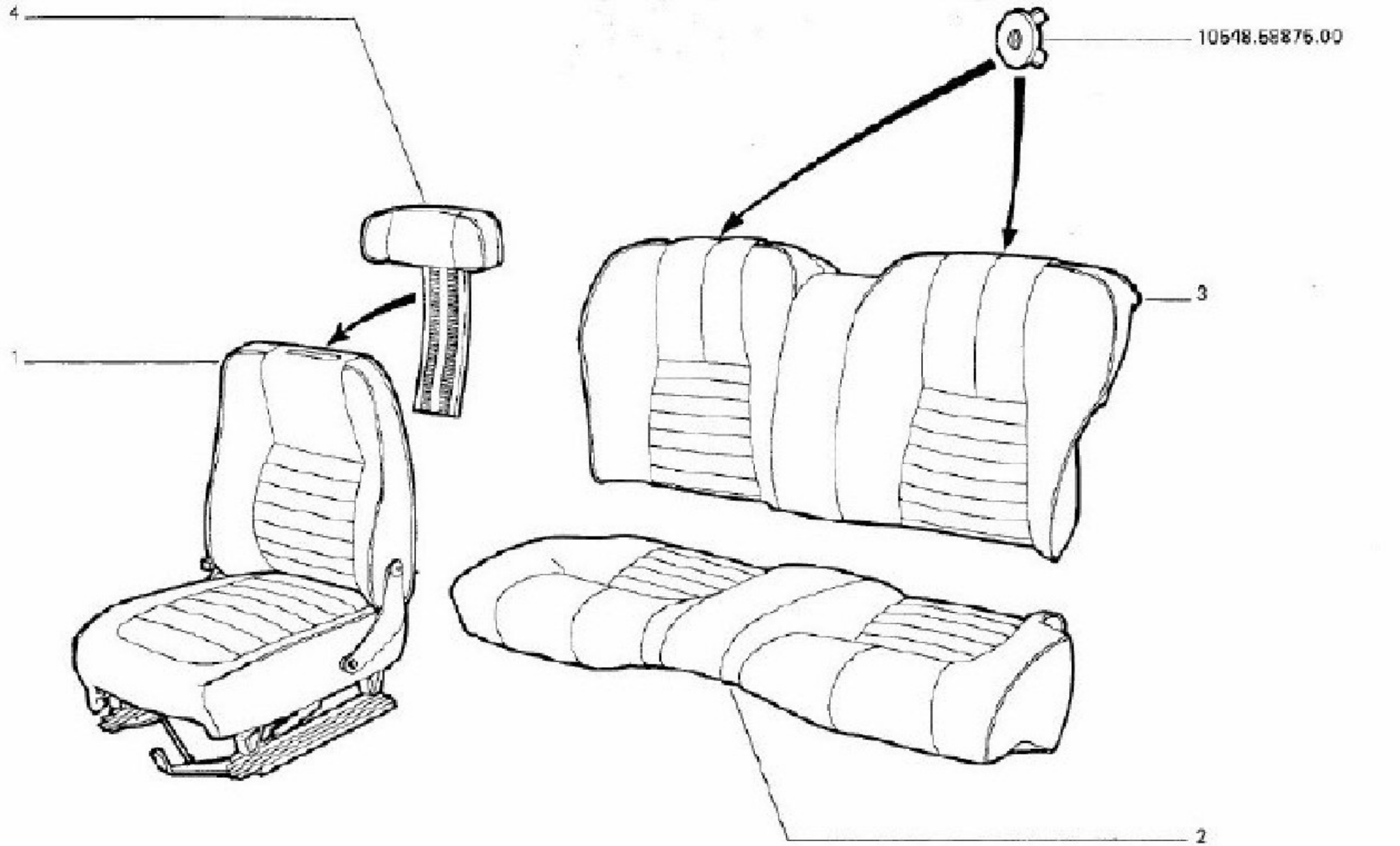

TAV. 89.30

TAPPEZZERIE
SELLERIE
UPHOLSTERY
INNENVERKLEIDUNGEN
TAPICERIAS

Modif.	N. ORDINAZIONE	Q.tà	Colore Couleur Color Farbe Colores (*)	Rivestimento Sellerie Upholstery Verkleidung Tapizado (**)	Validità Application des equipements Validity Gültigkeit Validez	Nota Notes Notes Anmerkungen Anotaciones
	11610.58001.01 s.	1	n	tx	g. s.	(*) n = nero / noir / schwarz / black / negro
	11610.58001.26 s.	1	cn	tx	g. s.	gc = grigio city / gris city / city grey / citigrau / gris city
	11610.58001.36 s.	1	cm	tx	g. s.	no = nocciola / noisette / hazel brown / nussbrau / marron claro
	11610.58001.61 s.	1	at	v	g. s.	cn = cuoio naturale / cuir naturel / leather / naturleder / cuero natural
	11610.58001.73 s.	1	bc	v	g. s.	cm = cinghiale maremma / gris sanglier / wildboarleather / wildschweinlederfacben / jabali maremma
	11610.58001.82 s.	1	gc	v	g. s.	at = antracite / antracite / anthracite / anthrazit / antracita
	11610.58001.95 s.	1	no	v	g. s.	bc = bleu caravelle / bleu caravelle / caravelle blue / Karevelbleu / bleu caravelle
	11611.58001.01, s.	1	n	tx	g. d.	(**) v = velluto / velours / velvet / Samt / terciopelo
	11611.58001.26 s.	1	cn	tx	g. d.	tx = texalfa / texalfa / texalfa / texalfa / texalfa
	11611.58001.36 s.	1	cm	tx	g. d.	
	11611.58001.61 s.	1	at	v	g. d.	
1	11611.58001.73 s.	1	bc	v	g. d.	
	11611.58001.82 s.	1	gc	v	g. d.	
	11611.58001.95 s.	1	no	v	g. d.	
	11610.58002.01 d.	1	n	tx	g. s.	
	11610.58002.26 d.	1	cn	tx	g. s.	
	11610.58002.36 d.	1	cm	tx	g. s.	
	11610.58002.61 d.	1	at	v	g. s.	
	11610.58002.73 d.	1	bc	v	g. s.	
	11610.58002.82 d.	1	gc	v	g. s.	
	11610.58002.95 d.	1	no	v	g. s.	
	11611.58002.01 d.	1	n	tx	g. d.	
	11611.58002.26 d.	1	cn	tx	g. d.	

TAV. 69.30

1 EDIZIONE APRILE
EDITION AVRIL
EDITION APRIL
AUSGABE APRIL
EDICION APRIL
1974

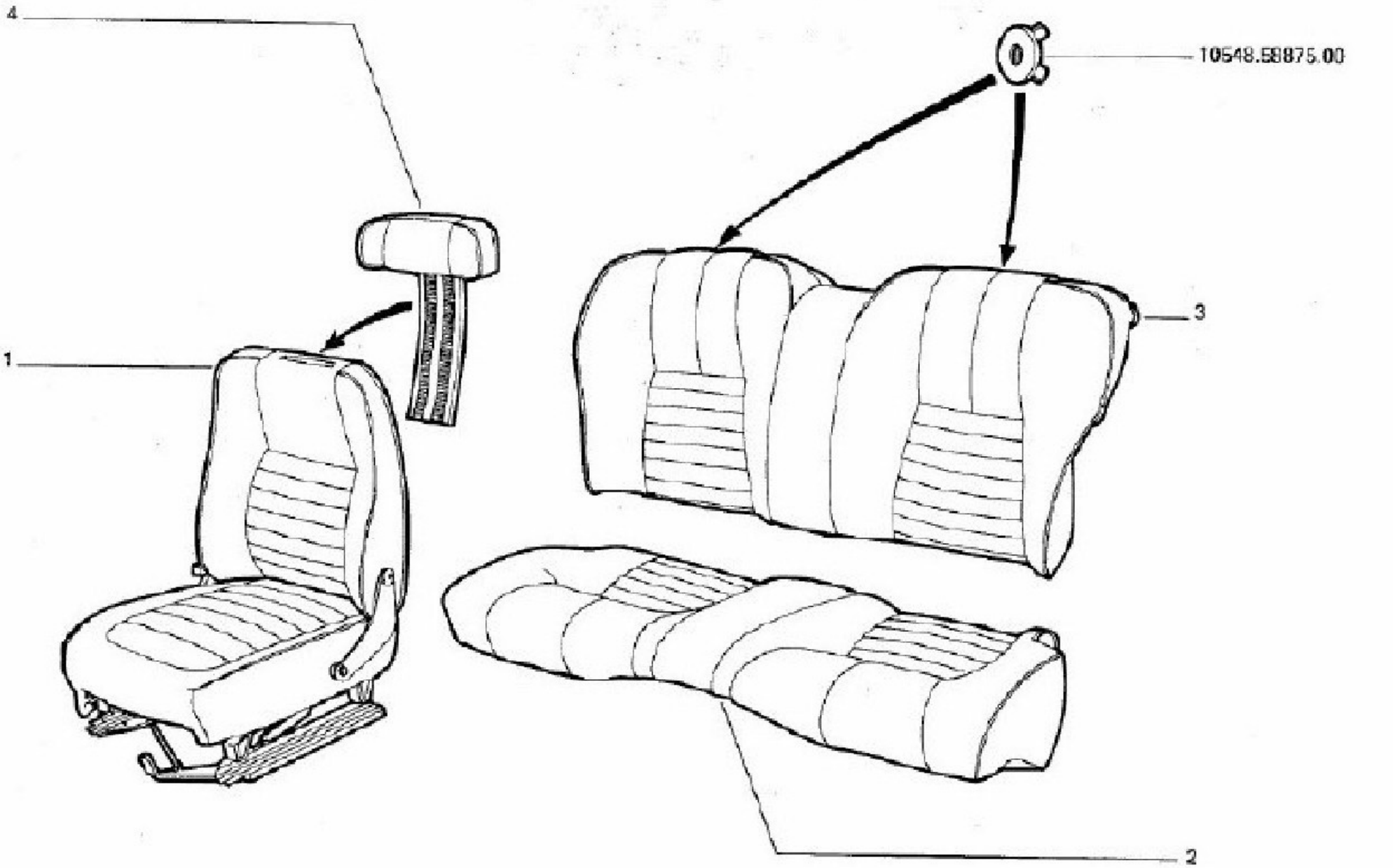

TAV. 69.30

TAPPEZZERIE
SELLERIE
UPHOLSTERY
INNENVERKLEIDUNGEN
TAPICERIAS

Modif.	N. ORDINAZIONE	Q.tà	Colore Couleur Color Farbe Colores (*)	Rivestimento Sellerie Upholstery Verkleidung Tapizado (**)	Validité Application des equipements validity Gültigkeit Validez
1	11611.58002.36 d.	1	cm	tx	g. d.
	11611.58002.61 d.	1	at	v	g. d.
	11611.58002.73 d.	1	bc	v	g. d.
	11611.58002.82 d.	1	gc	v	g. d.
	11611.58002.96 d.	1	no	v	g. d.
2	11610.58817.01	1	n	tx	g. s. - g. d.
	11610.58817.26	1	cn	tx	g. s. - g. d.
	11610.58817.36	1	cm	tx	g. s. - g. d.
	11610.58817.61	1	at	v	g. s. - g. d.
	11610.58817.73	1	bc	v	g. s. - g. d.
	11610.58817.82	1	gc	v	g. s. - g. d.
	11610.58817.96	1	no	v	g. s. - g. d.
3	11610.58018.01	1	n	tx	g. s. - g. d.
	11610.58018.26	1	cn	tx	g. s. - g. d.
	11610.58018.36	1	cm	tx	g. s. - g. d.
	11610.58018.61	1	at	v	g. s. - g. d.
	11610.58018.73	1	bc	v	g. s. - g. d.
	11610.58018.82	1	gc	v	g. s. - g. d.
	11610.58018.96	1	no	v	g. s. - g. d.

Note
Notes
Notes
Anmerkungen
Anotaciones

(*) n	= nero	noir	schwarz	black	negro
gc	= grigio city	gris city	city grey	citgrau	gris city
na	= nocciola	noisette	hazel brown	nussbrau	marron claro
cn	= cuoio naturale	cuir naturel	leather	naturleder	cuero natural
cm	= cinghiale maremma	gris sanglier	wildboarleather	wildschwainlederfarben	jabali maremma
at	= antracite	antracite	anthracite	anthrazit	antracita
bc	= bleu caravelle	bleu caravelle	caravelle blue	Karavelbleu	bleu caravelle
(**) v	= velluto	velours	velvet	Samt	terciopelo
tx	= texalfa	texalfa	texalfa	texalfa	texalfa

TAV. 69.30

1 EDIZIONE APRILE
EDITION AVRIL
EDITION APRIL
AUSGABE APRIL
EDICION ABRIL
1974

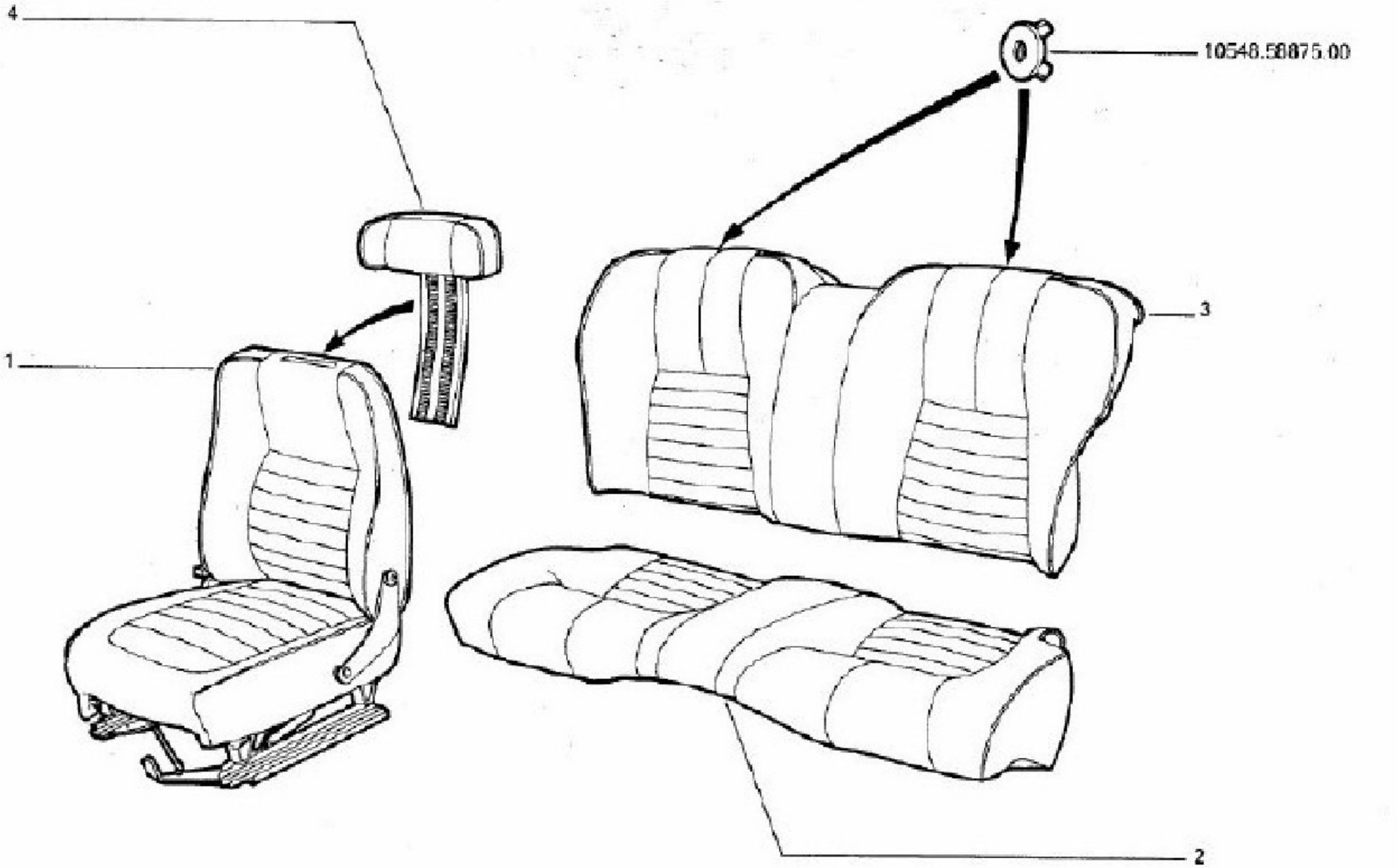

TAV. 69.30

TAPPEZZERIE
SELLERIE
UPHOLSTERY
INNENVERKLEIDUNGEN
TAPICERIAS

Modif.	N. ORDINAZIONE	Q.tà	Colore Couleur Color Farbe Colores (*)	Rivestimento Selerie Upholstery Verkleidung Tapizado (**)	Validità Application des equipements Validity Gültigkeit Validez	Note Notes Notes Anmerkungen Anotaciones
4	11610.58890.01	2	n	tx	g. s. - g. d.	(*) n = nero / noir / schwarz / black / negro
	11610.58890.26	2	cn	tx	g. s. - g. d.	gc = grigio city / gris city / city grey / citigrau / gris city
	11610.58890.36	2	cm	tx	g. s. - g. d.	no = nocciola / noisette / hazel brown / nussbraun / marron claro
	11610.58890.61	2	at	v	g. s. - g. d.	cn = cuoio naturale / cuir naturel / leather / naturleder / cuero natural
	11610.58890.73	2	bc	v	g. s. - g. d.	cm = cinghiale maremma / gris sanglier / wildboarleather / wildschweinlederfarben / jabali maremma
	11610.58890.82	2	gc	v	g. s. - g. d.	at = antracite / anthracite / anthracite / anthrazit / antracita
	11610.58890.95	2	no	v	g. s. - g. d.	bc = bleu caravelle / bleu caravelle / caravelle blue / Karavelblau / bleu caravelle
						(**) v = velluto / velours / velvet / Samt / terciopelo
	10548.58875.00 ●	2			g. s. - g. d.	tx = texalfa / texalfa / texalfa / texalfa / texalfa

● Galletto ● Ecrou à oreilles ● Wing nut ● Flügelmutter ● Tuerca de aletas

1ª EDIZIONE 1974 APRILE
1st EDITION APRIL
1. AUSGABE APRIL
1ère EDICION APRIL

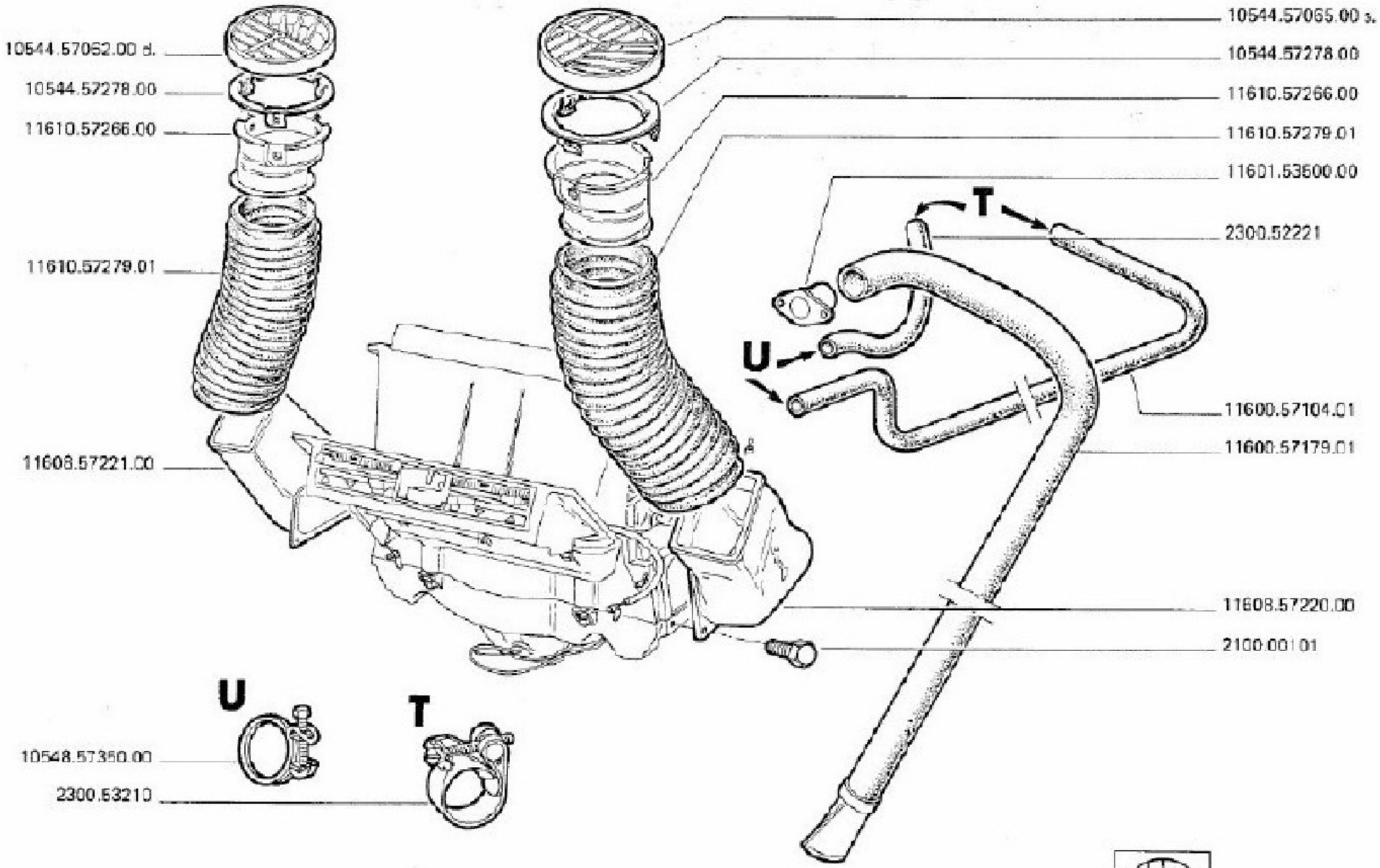

TAV. 81.00/0

IMPIANTO DI RISCALDAMENTO
INSTALLATION DE CHAUFFAGE
HEATING SYSTEM
HEIZUNG
SISTEMA DE CALEFACCION

MODIFICA	N ORDINAZIONE	QT.	DENOMINAZIONE	DESIGNATION	DESCRIPTION	BENENNUNG	DENOMINACIONES
	2100.00101	4	VITE	VIS	SCREW	SCHRAUBE	TORNILLO
	2300.52221	1	TUBO AL RISCALDAT.	TUBE	PIPE	ROHR	TUBO
	2300.53210	2	FASCETTA	PATTE DE FIXATION	CLAMP	SCHELLE	ABRAZADERA
	10544.57062.00	1	BOCCHETTA D.	BOUCHE AERATION	AIR OUTLET	EINFUELLSTUTZEN	BOCA
	10544.57065.00	1	BOCCHETTA S.	BOUCHE AERATION	AIR OUTLET	EINFUELLSTUTZEN	BOCA
	10544.57273.00	2	SEDE BOCCHETTA	SIEGE	SEAT	SITZ	SEDE
	10548.57350.00	2	FASCETTA	PATTE DE FIXATION	CLAMP	SCHELLE	ABRAZADERA
	11600.57104.01	1	TUBO DAL RISCALDAT.	TUBE	PIPE	ROHR	TUBO
	11600.57179.01	1	TUBO SCARICO	TUBE	PIPE	ROHR	TUBO
	11601.53500.00	1	BOCCOLA	BILLE	BALL	KUGEL	ESFERA
	11608.57220.00	1	RACCORDO D.	RACCORD	UNION	VERTEILER	RACOR
	11608.57221.00	1	RACCORDO S.	RACCORD	UNIÓN	VERTEILER	RACOR
	11610.57266.00	2	TUBO AREA	TUBE	PIPE	ROHR	TUBO
	11610.57279.01	2	MANICOTTO	BALADEUR	SLEEVE	SCHALTHUFFE	MANGUITO

APPAREIL DE CHAUFFAGE
HEATER
HEIZGERÄT
CALENTADOR

TAV. 81.10

1°	EDIZIONE	1974	APRILE	
1st	EDITION		APRIL	
1st	EDITION		APRIL	
1.	AUSGABE		APRIL	
1ère	EDICION		ABRIL	

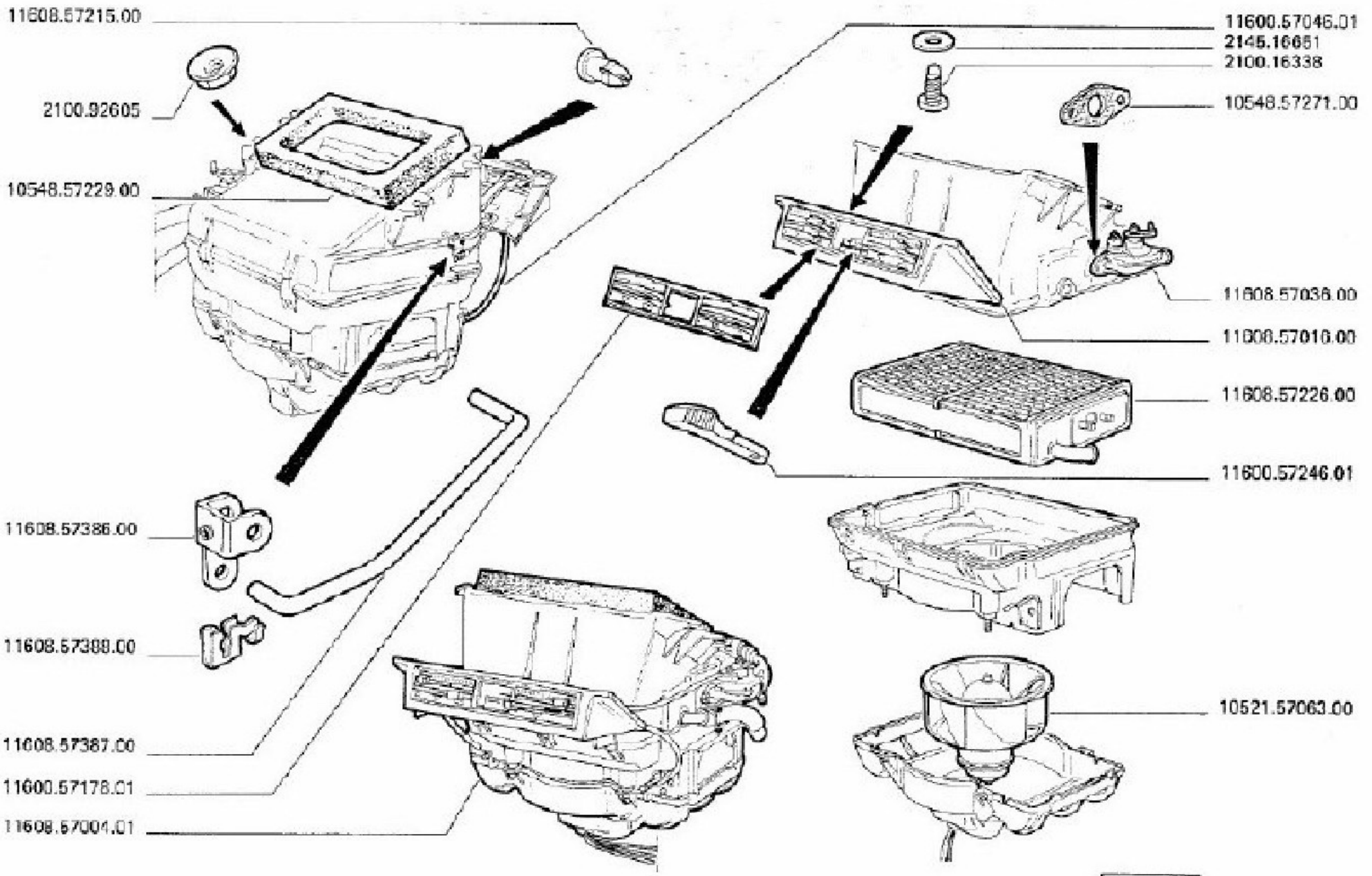

TAV. 81.10/0

RISCALDATORE
APPAREIL DE CHAUFFAGE
HEATER
HEIZGERAET
CALENTADOR

MODIFICA	N. ORDINAZIONE	QT.	DENOMINAZIONE	DESIGNATION	DESCRIPTION	BENENNUNG	DENOMINACIONES
	2100.16338	2	VITE	VIS	SCREW	SCHRAUBE	TORNILLO
	2100.92605	4	DADO	ECROU	NUT	MUTTER	TUERCA
	2145.16651	2	RONDELLA	RONDELLE	WASHER	SCHEIBE	ARANDELLA
	10521.57063.00	1	MOTORINO	MOTEUR	MOTOR	GEBLAESEMOTOR	MOTOR VENTILADOR
	10548.57229.00	1	GUARNIZIONE	JOINT	GASKET	DICHTUNG	JUNTA
	10548.57271.00	1	GUARNIZIONE	JOINT	GASKET	DICHTUNG	JUNTA
	11600.57046.01	3	CAVO FLESSIBILE	FIL	WIRE	SEIL	CABLE-BOWDEN
	11600.57178.01	1	MOSTRINA	MOTIF	ORNAMENT	ZIERUNTERLAGE	DISTINTIVO
	11600.57246.01	4	POMELLO	BOUTON	KNOB	KNOPF	LLAVE
	11608.57004.01	1	RISCALDATORE COMPL.	RECHAUFFEUR	HEATER	HEIZUNG	CALENTADOR
	11608.57016.00	1	COMANDO COMPL.	COMMANDE	LINK	DREHVERSCHLUSS	SISTEMA
	11608.57036.00	1	RUBINETTO	ROBINET	COCK	HAHN	GRIFO
	11608.57215.00	1	PERNO	AXE	PIVOT PIN	ZAPFEN	PERNO
	11608.57226.00	1	MASSA RADIANTE	ELEMENT CHAUFFANT	RADIATOR CORE	WAERMETAUSCHER	MASA RADIANTE
	11608.57386.00	1	BOCCOLA	BAGUE	BUSHING	BUECHSE	CASQUILLO
	11608.57387.00	1	TIRANTE	BIELLETTE	ROD	ZUGSTANGE	TIRANTE
	11608.57388.00	1	MOLLETTA	AGRAFE	CLIP	KLEMMSTUECK	MUELLECITO

IMPIANTO DI AREAZIONE
SYSTEME D'AERATION
VENTILATION SYSTEM
BELÜFTUNGSANLAGE
EQUIPO DE VENTILACION

TAV. 82.10

1ª	EDIZIONE	1974	APRILE
1ère	EDITION		AVRIL
1st	EDITION		APRIL
1.	AUSGABE		APRIL
1ª	EDICION		ABRIL

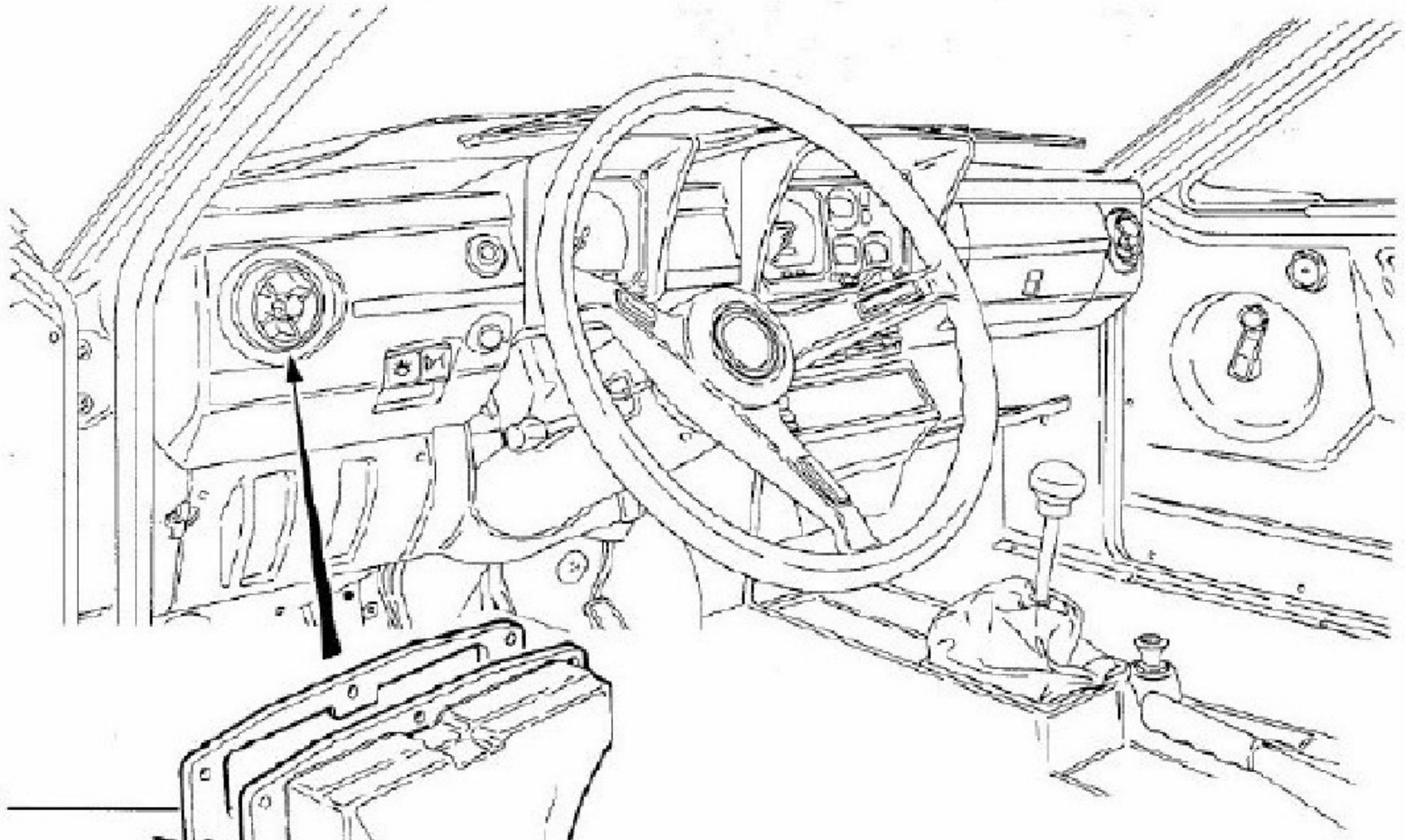

11610.63364.00

11608.63186.00

2203.70123

11601.63044.02
11601.63044.04

11610.63094.00 d.
11610.63095.00 s.

N. 0899

Alfetta GT

TAV. 02.10/0

IMPIANTO DI AREAZIONE
SYSTEME D AERATION
VENTILATION SYSTEM
BELUEFTUNGS ANLAGE
EQUIPO DE VENTILACION

MODIFICA	N. ORDINAZIONE		QT	DENOMINAZIONE	DESIGNATION	DESCRIPTION	BENENNUNG	DENOMINACIONES
	2203.70123		10	RIVETTO	RIVET	RIVET	NIET	REMACHE
	11601.63044.02	*	2	BOCCHETTA	BOUCHE AERATION	AIR OUTLET	EINFUELLSTUTZEN	BOCA
	11601.63044.04	*	2	BOCCHETTA	BOUCHE AERATION	AIR OUTLET	EINFUELLSTUTZEN	BOCA
	11608.63186.00		2	SOFFIETTO	SOUFFLET	BELLOWS	BALG	FUELLE
	11610.63094.00		1	CONDOTTO ARIA D.	CONDUIT	DUCT	LEITUNG	CONDUCTO
	11610.63095.00		1	CONDOTTO ARIA S.	CONDUIT	DUCT	LEITUNG	CONDUCTO
	11610.63364.00		2	GUARNIZIONE	JOINT	GASKET	DICHTUNG	JUNTA

* ALTERNATIVA ALTERNATIVE ALTERNATIVE WAHLWEISE ALTERNATIVA

DOTAZIONE ATTREZZI
OUTILLAGE LOT DE BORD
TOOL KIT
WERKZEUG
JUEGO DE HERRAMIENTAS

TAV. 91.00

1	EDIZIONE	1974	APRILE
	EDITION		APRIL
	EDITION		APRIL
	AUSGABE		APRIL
	EDICION		ABRIL

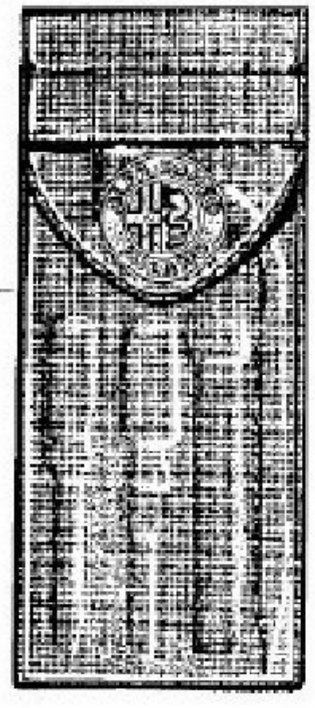

10512.80010.00

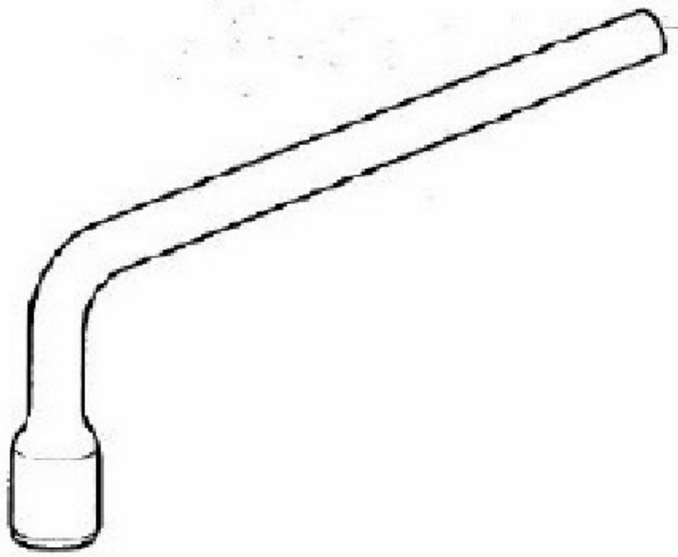

2400.11919

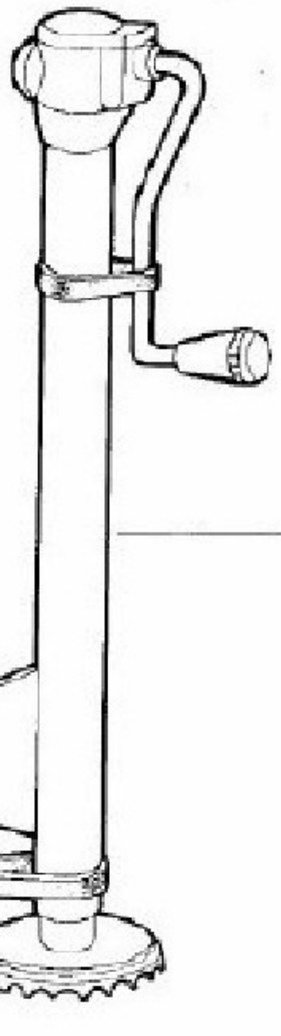

10500.80015.03

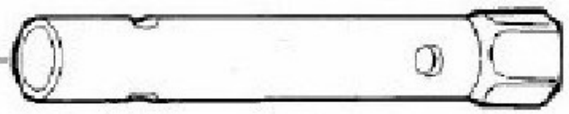

2400.11020

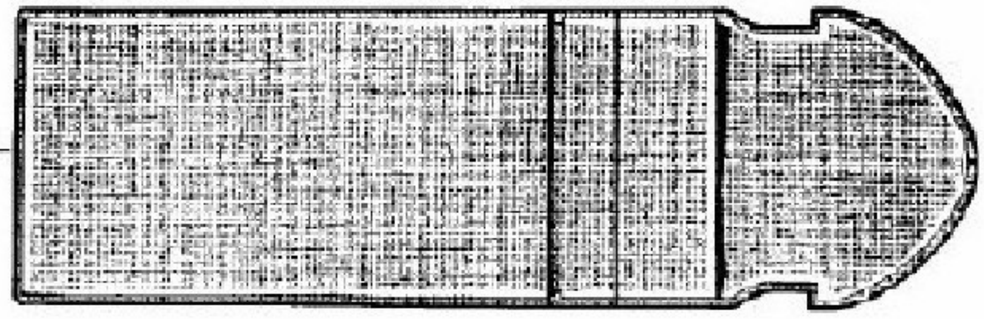

10548.80116.00

TAV. 91.00/D

DOTAZIONE ATTREZZI
OUTILLAGE LOT DE BORD
TOOL KIT
WERKZEUG
JUEGO DE HERRAMIENTAS

MODIFICA	N. ORDINAZIONE	QT.	DENOMINAZIONE	DESIGNATION	DESCRIPTION	BENENNUNG	DENOMINACIONES
	2400.11020	1	CHIAVE CANDELE	CLE	KEY	SCHLUESSEL	LLAVE
	2400.11919	1	CHIAVE PER RUOTE	CLE	KEY	SCHLUESSEL	LLAVE
	10500.80015.03	1	MARTINETTO	CRIC	JACK	WAGENHEBER	GATO
	10512.80010.00	1	BORSA COMPL.	TROUSSE A OUTILS	TOOL KIT	WERKZEUGTASCHE	BOLSA HERRAMIENTAS
	10548.80116.00	1	BORSA	TROUSSE A OUTILS	TOOL KIT	WERKZEUGTASCHE	BOLSA HERRAMIENTAS

RÉPERTOIRE NUMÉRIQUE
NUMERICAL INDEX
NUMMERVERZEICHNIS
INDICE NUMERICO

INDICE NUMERICO

INDICE NUMERICO
REPERTOIRE NUMERIQUE
NUMERICAL INDEX
NUMMERISCHES SACHVERZEICHNIS
INDICE NUMERICO

1306.12028	01.09/0	1315.55009	41.10/0	2100.04111	32.10/0	2100.16345	64.00/2
1306.12028	09.00/0	1315.55408	41.23/0	2100.04119	32.10/0	2100.16345	67.02/1
1306.12033	02.30/0	1315.58005	03.10/0	2100.04186	11.20/0	2100.16351	43.01/0
1306.12033	09.00/0	1315.58006	03.10/0	2100.04186	21.82/0	2100.16351	43.07/0
1306.14041	01.31/0	1315.60011	01.41/0	2100.04186	21.83/0	2100.16351	43.08/0
1306.30063	01.41/0	1315.60011	09.00/0	2100.05101	21.83/0	2100.16351	66.10/0
1306.32010	09.00/0	1315.60012	01.41/0	2100.05106	01.04/0	2100.16353	64.00/1
1306.32010	41.10/0	1315.60015	01.41/0	2100.05138	01.04/0	2100.16367	66.11/0
1315.10019	01.06/0	1315.60016	01.41/0	2100.05138	03.10/0	2100.16764	69.00/0
1315.10116	01.02/0	1356.15024	12.00/0	2100.05189	01.10/0	2100.16963	32.01/0
1315.10116	10.01/0	1356.31004	14.30/0	2100.05192	01.10/0	2100.16963	32.03/0
1315.10403	01.01/0	1356.31004 01	14.30/0	2100.05192	02.80/0	2100.16965	12.22/0
1315.10403	09.00/0	1356.31004 02	14.30/0	2100.05194	01.10/0	2100.20318	32.01/0
1315.12023	01.08/0	1356.31004 03	14.30/0	2100.05195	01.04/0	2100.20319	32.03/0
1315.12092	01.09/0	1356.31004 04	14.30/0	2100.05895	01.02/0	2100.20180	12.02/0
1315.12093	01.09/0	1356.31004 05	14.30/0	2100.05904	01.02/0	2100.20256	31.01/0
1315.12409	01.08/0	1356.31004 06	14.30/0	2100.05908	01.02/0	2100.20257	21.50/0
1315.12408	01.90/0	1356.45090	31.07/0	2100.06007	21.81/0	2100.32963	64.00/2
1315.12408	09.00/0	1356.66122	02.62/0	2100.06007	21.83/0	2100.32963	67.02/0
1315.12411	01.09/0	1356.66122	02.63/0	2100.08076	12.02/0	2100.81405	02.64/0
1315.12411	09.00/0	1365.67054	02.64/0	2100.08078	12.02/0	2100.81405	02.70/1
1315.12801	01.09/0	1365.94409	02.20/0	2100.08378	04.00/0	2100.81405	32.10/0
1315.14019	01.31/0	1365.94801 01	02.20/0	2100.09390	01.10/0	2100.81405	42.01/0
1315.26017	01.41/0	1365.94801 02	02.20/0	2100.08976	01.02/0	2100.81408	01.10/0
1315.30002	01.41/0	1413.26042	31.20/0	2100.08997	01.02/0	2100.81409	02.62/0
1315.30009	01.41/0	1413.26042	63.20/0	2100.09430	12.02/0	2100.81409	02.63/0
1315.30009	01.90/0	1488.38005	63.30/0	2100.09434	12.02/0	2100.81408	02.64/0
1315.30011	01.41/0	2100.00101	65.20/0	2100.10940	01.02/0	2100.81408	02.70/0
1315.30012	01.41/0	2100.00101	81.00/0	2100.10941	01.02/0	2100.81408	02.70/1
1315.30013	01.41/0	2100.00162	21.71/0	2100.10942	01.02/0	2100.81409	21.84/0
1315.30038	01.41/0	2100.00172	41.10/0	2100.10943	01.02/0	2100.81408	31.05/0
1315.30040	01.41/0	2100.00237	12.22/0	2100.10952	01.10/0	2100.81409	41.10/0
1315.30041	01.41/0	2100.00238	03.10/0	2100.11236	21.50/0	2100.81408	45.02/0
1315.30404	01.41/0	2100.00241	01.10/0	2100.13276	32.10/0	2100.81409	45.08/0
1315.32007	01.31/0	2100.00247	32.11/0	2100.15916	66.20/0	2100.81408	63.00/0
1315.35063	43.01/0	2100.02004	31.16/0	2100.15918	66.20/0	2100.81408	63.10/0
1315.35063	43.07/0	2100.02009	32.11/0	2100.15930	41.10/0	2100.81408	64.00/2
1315.35063	43.08/0	2100.02035	31.14/0	2100.16200	68.00/1	2100.81408	66.11/0
1315.44043	02.80/0	2100.02042	31.14/0	2100.16317	62.01/0	2100.81408	66.30/0
1315.50401 05	02.10/0	2100.02465	31.14/0	2100.16317	62.10/0	2100.81408	66.31/0
1315.50401 06	02.10/0	2100.02465	31.16/0	2100.16319	64.00/0	2100.81408	67.02/1
1315.50411 03	02.10/0	2100.02624	12.22/0	2100.16319	66.10/0	2100.81414	02.85/0
1315.50411 04	02.10/0	2100.02846	21.14/0	2100.16328	67.02/1	2100.81414	12.22/0
1315.52411	02.62/0	2100.03105	21.84/0	2100.16330	67.03/0	2100.81414	21.02/0
1315.52411	02.63/0	2100.03108	32.11/0	2100.16338	81.10/0	2100.81415	66.11/0

INDICE NUMERICO
REPERTOIRE NUMERIQUE
NUMERICAL INDEX
NUMMERISCHES SACHVERZEICHNIS
INDICE NUMERICO

2100.81419	02.03/0	2100.81440	21.50/0	2105.00168	02.70/0	2120.15026	02.63/0
2100.81428	11.30/0	2100.92604	63.20/0	2105.00170	01.10/0	2120.15026	32.10/0
2100.81428	11.31/0	2100.92604	65.20/0	2105.00172	04.11/0	2120.15027	03.10/0
2100.81428	11.32/0	2100.92605	61.60/0	2105.00209	01.20/0	2120.15027	21.72/0
2100.81428	11.51/0	2100.92605	66.11/0	2105.00235	02.03/0	2120.15046	02.62/0
2100.81428	12.17/0	2100.92605	81.10/0	2105.00235	21.02/0	2120.15046	02.63/0
2100.81429	61.11/0	2100.92606	61.11/0	2105.00236	66.30/0	2120.15046	11.21/0
2100.81429	61.70/0	2100.92606	67.00/0	2105.00237	02.85/0	2120.15046	11.21/1
2100.81431	11.50/0	2100.92606	67.30/0	2105.00239	02.85/0	2120.15046	21.82/0
2100.81431	12.22/0	2102.16222	62.20/0	2105.00239	04.10/0	2120.15104	12.02/0
2100.81431	42.05/0	2102.16229	62.30/0	2105.00245	02.85/0	2120.15104	21.81/0
2100.81434	01.02/0	2102.16231	68.00/1	2105.00254	02.82/0	2120.15104	21.84/0
2100.81434	01.10/0	2102.16234	62.30/0	2105.01126	31.05/0	2120.15459	02.85/0
2100.81434	02.85/0	2102.16244	67.03/0	2105.02004	31.06/0	2120.20044	01.10/0
2100.81434	10.01/0	2102.16339	44.82/0	2105.02004	42.01/0	2120.20054	10.01/0
2100.81434	11.20/0	2102.16762	64.00/0	2105.02004	42.05/0	2120.20054	21.82/0
2100.81434	11.21/0	2102.16762	64.00/1	2105.02008	02.85/0	2120.20054	31.07/0
2100.81434	11.21/1	2102.16863	61.10/0	2105.02012	01.06/0	2120.20054	32.11/0
2100.81434	11.30/0	2102.16869	65.10/0	2105.02014	01.06/0	2120.20070	21.02/0
2100.81434	11.31/0	2102.32523	02.64/0	2105.02016	01.06/0	2120.20072	01.41/0
2100.81434	11.32/0	2102.32545	61.60/0	2105.02024	12.17/0	2120.20072	32.01/0
2100.81434	12.17/0	2102.32931	67.01/0	2105.02039	02.70/0	2120.20072	32.03/0
2100.81434	14.10/0	2105.00132	02.64/0	2105.02040	12.02/0	2120.20073	32.10/0
2100.81434	14.40/0	2105.00135	43.07/0	2105.02042	12.02/0	2120.20078	12.22/0
2100.81434	21.81/0	2105.00162	02.70/0	2105.02065	12.02/0	2120.20139	01.10/0
2100.81434	21.82/0	2105.00162	04.00/0	2105.02070	11.30/0	2120.20181	01.41/0
2100.81434	21.83/0	2105.00162	21.02/0	2105.02070	11.31/0	2120.20226	32.11/0
2100.81434	21.84/0	2105.00162	31.05/0	2105.02070	11.32/0	2120.20352	21.71/0
2100.81434	31.06/0	2105.00162	45.02/0	2105.02500	02.64/0	2120.70054	02.62/0
2100.81434	31.07/0	2105.00162	45.08/0	2105.02594	11.30/0	2120.70054	02.63/0
2100.81434	31.16/0	2105.00162	67.02/1	2105.02594	11.31/0	2120.92315	01.02/0
2100.81434	32.01/0	2105.00163	01.06/0	2105.02594	11.32/0	2120.92408	31.02/0
2100.81434	32.03/0	2105.00163	01.41/0	2105.02620	01.20/0	2120.92408	31.07/0
2100.81434	42.01/0	2105.00163	02.62/0	2105.02622	01.20/0	2120.92408	32.11/0
2100.81434	42.02/0	2105.00163	02.63/0	2105.04185	11.21/1	2120.92805	21.50/0
2100.81434	42.05/0	2105.00163	11.51/0	2105.04185	14.10/0	2120.92824	12.22/0
2100.81434	63.00/0	2105.00163	21.84/0	2105.04186	11.21/0	2120.92831	32.11/0
2100.81434	63.10/0	2105.00164	02.20/0	2105.13238	32.11/0	2120.92855	31.01/0
2100.81434	66.10/0	2105.00164	02.21/0	2105.13267	02.70/1	2120.92855	31.16/0
2100.81434	66.30/0	2105.00164	02.22/0	2105.20195	12.20/0	2120.92856	31.01/0
2100.81437	02.70/0	2105.00164	02.62/0	2105.20199	45.01/0	2120.92856	31.05/0
2100.81437	10.01/0	2105.00164	02.63/0	2105.20199	43.07/0	2120.92866	31.03/0
2100.81437	12.17/0	2105.00164	02.70/1	2105.20199	43.08/0	2120.92875	12.21/0
2100.81437	21.60/0	2105.00166	01.06/0	2120.15025	02.64/0	2120.92875	31.14/0
2100.81437	31.14/0	2105.00166	02.70/0	2120.15026	02.62/0	2125.15026	02.70/1

INDICE NUMERICO
REPERTOIRE NUMERIQUE
NUMERICAL INDEX
NUMMERISCHES SACHVERZEICHNIS
INDICE NUMERICO

2125.15026	43.01/0	2125.20071	43.08/0	2140.17353	32.03/0	2145.16588	66.31/0
2125.15026	43.08/0	2125.20078	11.21/1	2142.16671	62.30/0	2145.16718	61.70/0
2125.15027	01.02/0	2125.20078	11.30/0	2142.16672	61.60/0	2145.16718	66.11/1
2125.15027	01.04/0	2125.20078	11.31/0	2142.16673	67.02/1	2145.16719	21.71/0
2125.15027	04.00/0	2125.20078	11.32/0	2142.16675	02.70/0	2145.16719	21.72/0
2125.15027	04.10/0	2125.20078	12.02/0	2142.16715	63.30/0	2145.16721	02.62/0
2125.15027	21.84/0	2125.20078	43.01/0	2142.17350	63.30/0	2145.16721	02.63/0
2125.15027	41.10/0	2125.20078	43.07/0	2145.16525	42.01/0	2145.16722	43.01/0
2125.15028	01.20/0	2125.20078	43.08/0	2145.16526	11.30/0	2145.16722	43.07/0
2125.15028	42.05/0	2125.20078	45.08/0	2145.16526	11.31/0	2145.16722	43.08/0
2125.15029	01.02/0	2125.92408	02.85/0	2145.16526	11.32/0	2145.17022	04.10/0
2125.15029	01.10/0	2140.16526	21.71/0	2145.16527	42.05/0	2145.17251	32.11/0
2125.15029	02.01/0	2140.16528	31.07/0	2145.16528	42.01/0	2145.17253	67.02/0
2125.15029	02.80/0	2140.16528	66.30/0	2145.16528	42.05/0	2145.17271	67.02/1
2125.15029	42.01/0	2140.16650	02.64/0	2145.16650	67.02/1	2145.17277	21.02/0
2125.15029	42.05/0	2140.16650	62.01/0	2145.16651	64.00/2	2145.17278	11.10/0
2125.15039	02.70/0	2140.16650	62.10/0	2145.16651	66.10/0	2145.17303	64.00/2
2125.15051	01.06/0	2140.16654	21.81/0	2145.16651	67.02/1	2145.17303	67.02/0
2125.15051	01.10/0	2140.16670	68.00/0	2145.16651	81.10/0	2145.17303	67.03/0
2125.15051	67.02/0	2140.16672	65.10/0	2145.16652	01.10/0	2145.17305	61.51/0
2125.15055	31.06/0	2140.16675	12.02/0	2145.16652	21.02/0	2145.17305	64.00/0
2125.15055	31.11/0	2140.16675	21.81/0	2145.16654	01.06/0	2145.17352	01.06/0
2125.15104	01.06/0	2140.16692	32.11/0	2145.16654	02.82/0	2145.17352	01.41/0
2125.15104	02.82/0	2140.16805	04.00/0	2145.16654	02.85/0	2145.17352	02.20/0
2125.15104	21.83/0	2140.16810	32.10/0	2145.16654	21.83/0	2145.17352	02.21/0
2125.15104	21.84/0	2140.17022	21.71/0	2145.16664	12.21/0	2145.17352	02.22/0
2125.15104	42.02/0	2140.17028	31.14/0	2145.16671	63.30/0	2145.17352	02.70/0
2125.15525	11.10/0	2140.17070	69.00/0	2145.16672	12.22/0	2145.17352	04.10/0
2125.15526	31.01/0	2140.17253	64.00/2	2145.16672	43.01/0	2145.17353	01.06/0
2125.15526	31.02/0	2140.17253	68.00/0	2145.16672	43.07/0	2145.17353	12.00/0
2125.20011	12.02/0	2140.17255	68.00/0	2145.16672	43.08/0	2145.17353	12.02/0
2125.20041	42.01/0	2140.17279	32.01/0	2145.16673	04.10/0	2145.17353	42.01/0
2125.20042	11.30/0	2140.17279	32.03/0	2145.16673	04.11/0	2145.17353	42.05/0
2125.20042	11.31/0	2140.17352	01.02/0	2145.16673	21.02/0	2145.17353	43.01/0
2125.20042	11.32/0	2140.17352	01.04/0	2145.16673	41.10/0	2145.17353	43.07/0
2125.20042	12.17/0	2140.17352	02.70/0	2145.16673	64.00/2	2145.17353	43.08/0
2125.20054	01.06/0	2140.17352	03.10/0	2145.16673	66.11/0	2145.17354	11.51/0
2125.20054	11.20/0	2140.17352	04.00/0	2145.16675	02.03/0	2145.17354	12.02/0
2125.20054	11.21/0	2140.17353	01.10/0	2145.16675	02.85/0	2145.17354	21.61/0
2125.20054	12.02/0	2140.17353	02.01/0	2145.16675	04.10/0	2145.17365	01.20/0
2125.20055	21.61/0	2140.17353	02.80/0	2145.16675	63.00/0	2145.17365	12.02/0
2125.20066	02.64/0	2140.17353	03.10/0	2145.16675	63.10/0	2145.17365	12.20/0
2125.20068	04.00/0	2140.17353	12.22/0	2145.16678	31.01/0	2160.10851	21.82/0
2125.20071	43.01/0	2140.17353	21.82/0	2145.16688	62.01/0	2160.10851	21.83/0
2125.20071	43.07/0	2140.17353	32.01/0	2145.16688	62.10/0	2160.18522	01.41/0

INDICE NUMERICO
REPERTOIRE NUMERIQUE
NUMERICAL INDEX
NUMMERISCHES SACHVERZEICHNIS
INDICE NUMERICO

2160.18847	10.02/0	2300.12341	02.63/0	2340.32349	01.02/0	2600.22023	46.30/0
2160.18868	12.20/0	2300.51940	65.10/0	2340.32349	01.08/0	2600.22024	46.30/0
2160.23925	01.02/0	2300.51958	65.10/0	2340.32349	09.00/0	2600.22025	46.30/0
2160.23929	01.02/0	2300.51966	65.10/0	2340.32353	02.80/0	2600.22026	46.30/0
2160.32697	21.81/0	2300.51966	65.20/0	2340.32353	09.00/0	2600.22027	46.30/0
2180.23100	21.71/0	2300.52003	02.70/0	2340.34102	12.00/0	2600.22028	46.30/0
2180.30585	11.50/0	2300.52109	02.04/0	2340.34302	01.41/0	2600.22031	46.30/0
2200.24702	66.31/0	2300.52111	02.04/0	2340.34302	09.00/0	2600.22032	46.30/0
2200.24706	02.64/0	2300.52123	02.04/0	2340.35006	01.09/0	2600.22033	46.30/0
2200.24706	21.81/0	2300.52129	02.04/0	2340.35006	01.90/0	2600.22037	46.30/0
2200.24706	21.84/0	2300.52131	02.04/0	2340.35006	09.00/0	2600.22040	46.30/0
2200.24809	02.62/0	2300.52133	02.04/0	2340.35024	01.04/0	2600.22045	46.30/0
2200.24809	02.63/0	2300.52221	81.00/0	2340.35024	09.00/0	2600.22071	46.30/0
2200.24868	10.02/0	2300.52505	02.04/0	2340.35031	12.00/0	2600.22076	46.30/0
2200.24882	10.02/0	2300.52518	02.03/0	2360.31504	01.02/0	2600.22085	46.30/0
2200.24882	11.51/0	2300.53204	04.11/0	2360.31581	01.02/0	2600.22096	46.30/0
2200.70111	61.11/0	2300.53209	21.02/0	2360.31582	01.02/0	2600.22240	46.30/0
2200.70122	66.11/0	2300.53210	21.02/0	2360.31583	01.02/0	2600.31802	66.10/0
2200.70148	66.11/0	2300.53210	81.00/0	2360.31618	01.09/0	2600.31802	66.11/0
2200.70161	63.00/0	2300.53214	31.16/0	2360.31619	01.08/0	2600.31812	65.10/0
2200.70171	67.02/1	2300.53215	02.70/0	2360.36176	67.01/0	2600.31812	65.20/0
2200.70223	66.11/0	2300.53215	02.70/1	2400.11020	91.00/0	2600.32014	46.20/0
2200.70232	62.30/0	2300.53218	04.11/0	2400.11919	91.00/0	2600.32020	46.20/0
2200.70311	64.00/2	2300.53220	04.11/0	2400.51012	63.30/0	2600.32070	46.20/0
2200.70311	67.03/0	2300.53222	04.11/0	2500.10722	46.30/0	2600.33001	46.20/0
2200.70321	63.20/0	2340.32028	04.10/0	2500.10723	46.30/0	2600.33003	46.20/0
2200.70321	64.00/2	2340.32196	04.10/0	2500.10732	46.30/0	2600.33006	46.20/0
2200.70321	67.02/0	2340.32231	01.06/0	2500.10780	46.30/0	2600.33007	46.20/0
2200.70321	67.02/1	2340.32231	09.00/0	2600.22000	46.30/0	2600.33024	46.20/0
2200.70347	66.10/0	2340.32231	21.02/0	2600.22001	46.30/0	2600.33025	46.20/0
2200.70347	66.11/1	2340.32235	02.80/0	2600.22002	46.30/0	2600.33027	46.20/0
2200.70444	61.70/0	2340.32235	09.00/0	2600.22003	46.30/0	2600.33047	46.20/0
2200.70444	66.30/0	2340.32235	12.00/0	2600.22004	46.30/0	2600.33051	46.20/0
2202.70132	61.60/0	2340.32237	02.80/0	2600.22006	46.30/0	2600.33069	46.20/0
2202.70132	63.00/0	2340.32237	09.00/0	2600.22008	46.30/0	2600.33087	46.20/0
2202.70132	63.10/0	2340.32243	01.08/0	2600.22010	46.30/0	2600.33202	46.20/0
2202.70142	61.60/0	2340.32243	01.20/0	2600.22011	46.30/0	2600.33203	46.20/0
2203.70111	61.30/0	2340.32243	09.00/0	2600.22012	46.30/0	2600.33210	46.20/0
2203.70123	82.10/0	2340.32328	04.00/0	2600.22013	46.30/0	2600.33220	46.20/0
2260.32697	21.83/0	2340.32328	09.00/0	2600.22014	46.30/0	2600.36554	46.20/0
2265.32666	21.71/0	2340.32336	01.02/0	2600.22015	46.30/0	2600.36555	46.20/0
2265.32666	21.72/0	2340.32336	09.00/0	2600.22018	46.30/0	2600.36556	46.20/0
2300.12311	02.62/0	2340.32337	02.80/0	2600.22019	46.30/0	2600.36564	41.10/0
2300.12311	02.63/0	2340.32337	09.00/0	2600.22020	46.30/0	2600.36564	46.20/0
2300.12341	02.62/0	2340.32343	09.00/0	2600.22021	46.30/0	2600.36600	41.10/0

INDICE NUMERICO
RÉPERTOIRE NUMERIQUE
NUMERICAL INDEX
NUMMERISCHES SACHVERZEICHNIS
INDICE NUMERICO

2600.36600	46.20/0	10106.04010.00/16	02.41/0	10110.03307.19	01.42/0	10120.03307.11	01.42/0
2600.36601	46.20/0	10106.04010.00/17	02.41/0	10110.03307.20	01.42/0	10121.04010.00/07	02.41/0
2600.36602	46.20/0	10106.04010.00/18	02.41/0	10110.03307.21	01.42/0	10200.32807.00	02.20/0
2600.36603	46.20/0	10106.04010.00/20	02.41/0	10110.03307.22	01.42/0	10200.42306.00	02.64/0
2600.36629	46.20/0	10106.04110.00	02.70/0	10110.03307.23	01.42/0	10200.42307.00	02.64/0
2600.36640	46.20/0	10106.04110.00	09.00/0	10110.03307.24	01.42/0	10200.44503.01	02.62/0
2600.36642	46.20/0	10106.04147.00	02.40/0	10110.03307.25	01.42/0	10200.44503.01	02.63/0
2600.36646	46.20/0	10106.04148.00	02.40/0	10110.03307.26	01.42/0	10202.04061.00/04	02.20/0
2600.39006	46.20/0	10106.04149.00	02.40/0	10110.03307.27	01.42/0	10202.04061.00/05	02.20/0
2600.39010	46.20/0	10109.04105.00	02.62/0	10110.03307.28	01.42/0	10500.01040.00	01.04/0
2600.39036	46.20/0	10109.04105.00	02.63/0	10110.03307.29	01.42/0	10500.01104.00	01.01/0
2600.53102	41.10/0	10110.01112.00	01.01/0	10110.03307.30	01.42/0	10500.01105.00	01.01/0
2600.53102	46.20/0	10110.01115.00	01.04/0	10110.03307.31	01.42/0	10500.01106.01	01.01/0
2602.33001	46.20/0	10110.01505.00	01.08/0	10110.03307.32	01.42/0	10500.01141.03	01.02/0
2602.33007	46.20/0	10110.03041.00	01.42/0	10110.03307.33	01.42/0	10500.01161.01	01.02/0
2602.36585	46.20/0	10110.03041.01	01.42/0	10110.03307.34	01.42/0	10500.01176.00	01.04/0
2602.36836	46.20/0	10110.03103.00	01.41/0	10110.03307.35	01.42/0	10500.01176.00	09.00/0
2710.40518	44.53/0	10110.03105.00/01	01.41/0	10110.03307.36	01.42/0	10500.01176.01	01.04/0
2710.40518	44.82/0	10110.03105.00/02	01.41/0	10110.03307.37	01.42/0	10500.01176.02	01.04/0
2710.40520	44.53/0	10110.03300.01	01.42/0	10110.03307.38	01.42/0	10500.01176.03	01.04/0
2710.40528	64.00/1	10110.03300.03	01.42/0	10110.03307.39	01.42/0	10500.01177.05	01.06/0
2710.40528	66.10/0	10110.03302.00	01.42/0	10110.03307.40	01.42/0	10500.01191.00	01.06/0
2710.40535	44.72/0	10110.03305.01	01.42/0	10110.03307.41	01.42/0	10500.01191.00	09.00/0
2710.40550	44.53/0	10110.03305.02	01.42/0	10110.03307.42	01.42/0	10500.01191.01	01.06/0
2710.40550	44.63/0	10110.03306.01	01.42/0	10110.03307.43	01.42/0	10500.01313.00	01.04/0
2710.40580	44.09/0	10110.03306.02	01.42/0	10110.03307.44	01.42/0	10500.01503.02	01.08/0
2900.34026	12.20/0	10110.03307.00	01.42/0	10110.03307.45	01.42/0	10500.01503.04/01	01.09/0
4911.23201	41.10/0	10110.03307.01	01.42/0	10110.03307.46	01.42/0	10500.01568.00	01.08/0
10100.01135.00	01.07/0	10110.03307.02	01.42/0	10110.03307.47	01.42/0	10500.01570.01	01.08/0
10100.01317.00	01.04/0	10110.03307.03	01.42/0	10110.03307.48	01.42/0	10500.01570.01	01.90/0
10100.01317.00	09.00/0	10110.03307.04	01.42/0	10110.03308.00	01.42/0	10500.01570.01	09.00/0
10100.05703.00	41.10/0	10110.03307.05	01.42/0	10110.03308.03	01.42/0	10500.01613.01	02.90/0
10100.32135.00	02.03/0	10110.03307.06	01.42/0	10110.03316.00	01.42/0	10500.01704.00	01.90/0
10105.01062.00	02.80/0	10110.03307.07	01.42/0	10111.56200.00	63.20/0	10500.01704.00	02.82/0
10106.01609.00	02.80/0	10110.03307.08	01.42/0	10120.03307.00	01.42/0	10500.01704.00	09.00/0
10106.01609.00	09.00/0	10110.03307.09	01.42/0	10120.03307.01	01.42/0	10500.02104.00	01.31/0
10106.04010.00/01	02.41/0	10110.03307.10	01.42/0	10120.03307.02	01.42/0	10500.02105.00	01.31/0
10106.04010.00/04	02.41/0	10110.03307.11	01.42/0	10120.03307.03	01.42/0	10500.02202.00	01.31/0
10106.04010.00/05	02.40/0	10110.03307.12	01.42/0	10120.03307.04	01.42/0	10500.02307.00	01.31/0
10106.04010.00/10	02.40/0	10110.03307.13	01.42/0	10120.03307.05	01.42/0	10500.03016.01	01.41/0
10106.04010.00/11	02.40/0	10110.03307.14	01.42/0	10120.03307.06	01.42/0	10500.03300.02	01.42/0
10106.04010.00/12	02.40/0	10110.03307.15	01.42/0	10120.03307.07	01.42/0	10500.03306.00	01.42/0
10106.04010.00/13	02.41/0	10110.03307.16	01.42/0	10120.03307.08	01.42/0	10500.03307.00	01.42/0
10106.04010.00/14	02.41/0	10110.03307.17	01.42/0	10120.03307.09	01.42/0	10500.03307.01	01.42/0
10106.04010.00/15	02.41/0	10110.03307.18	01.42/0	10120.03307.10	01.42/0	10500.03307.02	01.42/0

INDICE NUMERICO
REPERTOIRE NUMERIQUE
NUMERICAL INDEX
NUMMERISCHES SACHVERZEICHNIS
INDICE NUMERICO

10500.03307.03	01.42/0	10500.21070.08/01	31.11/0	10508.13607.00	12.17/0	10514.01510.02	01.09/0
10500.03307.04	01.42/0	10500.21070.08/02	31.06/0	10508.13623.00	12.17/0	10514.03303.00	01.42/0
10500.03307.05	01.42/0	10500.21070.08/02	31.11/0	10512.01064.00	02.80/0	10514.03304.00	01.42/0
10500.03307.06	01.42/0	10500.21070.08/03	31.06/0	10512.01064.01	02.80/0	10514.05106.01	41.10/0
10500.03307.07	01.42/0	10500.21070.08/03	31.11/0	10512.01143.00	01.06/0	10514.05141.00	41.10/0
10500.03307.08	01.42/0	10500.30083.00	02.85/0	10512.01663.00	04.11/0	10514.05142.00	41.10/0
10500.03307.09	01.42/0	10500.42358.00	02.64/0	10512.02111.01	01.32/0	10514.05143.00	41.10/0
10500.03307.10	01.42/0	10500.44545.00	02.62/0	10512.02111.02	01.32/0	10514.05500.00	43.01/0
10500.03307.11	01.42/0	10500.44545.00	02.63/0	10512.02112.01	01.32/0	10514.05500.00	43.07/0
10500.03307.12	01.42/0	10500.44546.03	02.62/0	10512.02112.02	01.32/0	10514.05500.00	43.08/0
10500.03307.13	01.42/0	10500.44546.03	02.63/0	10512.02203.00	01.32/0	10514.06011.01	03.10/0
10500.03307.14	01.42/0	10500.44546.04	02.62/0	10512.02203.01	01.32/0	10514.06105.04	03.10/0
10500.03307.15	01.42/0	10500.50261.01	66.20/0	10512.02203.02	01.32/0	10514.06128.00	03.10/0
10500.03307.16	01.42/0	10500.50325.03	66.20/0	10512.02203.03	01.32/0	10514.07201.00	04.00/0
10500.03307.17	01.42/0	10500.52060.02	66.31/0	10512.02203.04	01.32/0	10514.07226.00	01.41/0
10500.03307.18	01.42/0	10500.52201.01	66.31/0	10512.02203.05	01.32/0	10514.13216.03	12.16/1
10500.03307.19	01.42/0	10500.55439.01	67.02/0	10512.02203.06	01.32/0	10514.13216.03	12.16/2
10500.03307.20	01.42/0	10500.56011.02	66.10/0	10512.02203.07	01.32/0	10514.13219.05	12.16/1
10500.03307.21	01.42/0	10500.57218.02	66.20/0	10512.02232.00	01.32/0	10514.13219.05	12.16/2
10500.03307.22	01.42/0	10500.61144.02	65.10/0	10512.02232.01	01.32/0	10514.13227.01	12.16/2
10500.03307.23	01.42/0	10500.62451.01	64.00/1	10512.02232.02	01.32/0	10514.22052.03	21.51/0
10500.03307.24	01.42/0	10500.80015.03	91.00/0	10512.02232.03	01.32/0	10514.22052.03/05	21.51/0
10500.03307.25	01.42/0	10502.01577.00	02.70/0	10512.02403.00	01.31/0	10514.22052.03/06	21.51/0
10500.03307.26	01.42/0	10502.01577.00	09.00/0	10512.03304.01	01.42/0	10514.22052.03/08	21.51/0
10500.03307.27	01.42/0	10502.01582.00	01.09/0	10512.04010.08/03	02.41/0	10514.22052.03/09	21.51/0
10500.03322.01	01.41/0	10502.01676.01	02.80/0	10512.05312.00	42.01/0	10514.22052.03/13	21.51/0
10500.03324.00	01.41/0	10502.01679.00	02.80/0	10512.05312.00	42.05/0	10514.22052.03/17	21.51/0
10500.03325.01	01.41/0	10502.04028.00	02.40/0	10512.12050.01/04	11.31/0	10514.22052.03/25	21.51/0
10500.04020.00/01	02.10/0	10502.05011.00/02	41.23/0	10512.28100.02	31.20/0	10514.22053.03	21.51/0
10500.04020.00/02	02.10/0	10502.05011.00/04	41.23/0	10512.28100.03	31.20/0	10514.26004.02/09	21.61/0
10500.04020.00/03	02.10/0	10502.05011.00/05	41.23/0	10512.42036.06	02.64/0	10514.55765.01	67.00/0
10500.04020.00/04	02.10/0	10502.05011.00/09	41.23/0	10512.42037.02	02.64/0	10514.61244.01	64.00/1
10500.04020.00/05	02.10/0	10502.32061.00	02.20/0	10512.45050.00	21.10/0	10514.65086.00	46.00/0
10500.04020.01	02.10/0	10502.44071.00	02.63/0	10512.45050.00	21.40/0	10514.65086.01	46.00/0
10500.05030.00/02	42.02/0	10502.44520.00	02.62/0	10512.50248.00	61.11/0	10514.65087.00	46.00/0
10500.05030.00/07	42.02/1	10502.44520.00	02.63/0	10512.56037.00	66.31/0	10514.65087.01	46.00/0
10500.05030.00/08	42.02/1	10502.44568.00	02.62/0	10512.63260.00	61.70/0	10514.65203.00	63.30/0
10500.05030.00/10	42.02/0	10502.44568.00	02.63/0	10512.63371.00	02.64/0	10515.01144.01	02.70/1
10500.05030.03/01	42.02/0	10502.50249.00	61.11/0	10512.63372.00	02.64/0	10515.08011.00	02.70/1
10500.06322.00	02.80/0	10502.57218.01	66.20/0	10512.63373.00	02.64/0	10521.57063.00	81.10/0
10500.06322.01	02.80/0	10502.61146.02	66.00/0	10512.63381.00	02.64/0	10526.05920.00	41.11/0
10500.07203.00	04.00/0	10502.61146.02	62.30/0	10512.80010.00	91.00/0	10526.07336.00	04.02/0
10500.07203.00	09.00/0	10502.65035.02	46.00/0	10514.01507.01	01.09/0	10526.55432.00	67.01/0
10500.07205.00	04.00/0	10502.65561.00	46.00/0	10514.01507.01	01.90/0	10526.63260.02	62.30/0
10500.21070.08/01	31.06/0	10502.65561.02	62.30/0	10514.01507.01	09.00/0	10526.65079.00	41.10/0

INDICE NUMERICO
REPERTOIRE NUMERIQUE
NUMERICAL INDEX
NUMMERISCHES SACHVERZEICHNIS
INDICE NUMERICO

10531.05313.01	42.02/0	10541.55435.00	67.01/0	10548.01508.00	01.90/0	10548.04010.01/29	02.46/1
10535.23171.00/01	66.00/0	10541.55756.00	67.03/0	10548.01508.00	09.00/0	10548.04010.04/06	02.41/0
10535.23171.02/01	66.00/0	10541.55757.00	67.03/0	10548.01508.00/01	01.09/0	10548.04011.01/01	02.46/0
10536.01563.00	01.08/0	10541.55763.00	67.02/0	10548.01617.00	02.80/0	10548.04017.00	02.40/0
10536.58253.01	68.00/1	10541.56343.00	62.01/0	10548.01628.03	04.11/0	10548.05011.00/01	41.21/0
10536.65028.00	43.01/0	10541.56343.00	62.10/0	10548.01652.00	01.02/0	10548.05011.04/01	41.23/0
10536.65170.00	43.01/0	10541.56343.00	64.00/2	10548.02030.09	01.32/0	10548.05011.04/03	41.23/0
10536.65170.00	43.02/2	10541.56343.00	67.02/1	10548.02030.09/01	01.32/0	10548.05011.04/06	41.23/0
10536.65170.00	43.07/0	10541.56344.00	66.11/0	10548.02030.10	01.32/0	10548.05011.04/11	41.23/0
10536.65170.00	43.08/0	10541.56344.00	66.30/0	10548.02030.11	01.32/0	10548.05011.05	41.23/0
10539.09190.00	02.70/0	10541.56344.00	66.31/0	10548.02030.12	01.32/0	10548.05011.05/09	41.23/0
10539.09192.00	02.70/0	10541.58249.00	68.00/0	10548.02031.09	01.01/0	10548.05011.05/10	41.23/0
10539.09193.00	02.70/0	10541.58307.00	68.00/0	10548.02031.09/01	01.01/0	10548.05011.06	41.21/0
10539.59038.00	63.10/0	10541.58346.00	61.70/0	10548.02031.10	01.01/0	10548.05011.06/01	41.21/0
10539.61079.00	65.10/0	10541.58346.00	68.00/0	10548.02031.10/01	01.01/0	10548.05089.00	41.10/0
10541.01102.00	01.01/0	10541.59458.00	44.82/9	10548.02108.00	01.31/0	10548.05089.01	41.30/0
10541.01102.00	09.00/0	10544.07237.00	04.00/0	10548.02108.00	09.00/0	10548.05521.00	43.02/0
10541.01103.01	01.02/0	10544.55675.02	64.00/2	10548.02301.00	01.31/0	10548.05902.00	41.10/0
10541.01304.00	01.04/0	10544.55675.02	67.02/0	10548.02304.00	01.31/0	10548.05904.00	41.10/0
10541.01304.00	09.00/0	10544.55676.02	64.00/2	10548.03200.01	01.41/0	10548.05323.02	01.06/0
10541.01506.00	01.02/0	10544.56335.00	66.10/0	10548.03301.01	01.42/0	10548.07024.00	04.00/0
10541.01539.00	01.02/0	10544.56342.00	63.10/0	10548.03303.00	01.42/0	10548.07200.04	04.00/0
10541.01541.00	01.02/0	10544.56342.00	66.11/0	10548.04010.00/22	02.41/0	10548.07204.03	04.00/0
10541.01601.00	01.90/0	10544.57062.00	81.00/0	10548.04010.01/01	02.46/1	10548.07229.01	04.00/0
10541.01601.00	02.80/0	10544.57065.00	81.00/0	10548.04010.01/04	02.46/0	10548.08011.00	02.70/0
10541.01601.00	09.00/0	10544.57274.00	81.00/0	10548.04010.01/05	02.46/0	10548.08137.00	02.70/0
10541.01867.00	01.09/0	10544.58025.00	68.00/1	10548.04010.01/06	02.46/1	10548.08195.00	02.70/0
10541.02301.01	01.31/0	10544.58026.00	68.00/1	10548.04010.01/07	02.46/0	10548.12050.01/04	11.30/0
10541.02302.01	01.31/0	10544.58346.00	61.11/0	10548.04010.01/08	02.46/0	10548.12050.01/11	11.30/0
10541.02302.02	01.31/0	10544.58384.01	68.00/1	10548.04010.01/10	02.46/0	10548.12050.02/03	11.31/0
10541.02304.03	01.31/0	10544.58403.01	68.00/1	10548.04010.01/12	02.46/1	10548.12050.02/08	11.31/0
10541.02306.01	01.31/0	10544.58535.01	68.00/1	10548.04010.01/13	02.46/0	10548.12050.02/11	11.31/0
10541.03105.00	01.41/0	10544.58624.00	68.00/0	10548.04010.01/14	02.46/0	10548.12050.03/13	11.31/0
10541.05030.00/07	42.02/1	10544.58694.10	68.00/1	10548.04010.01/16	02.46/0	10548.12050.04/04	11.32/0
10541.05310.00	42.01/0	10544.58727.00	68.00/1	10548.04010.01/16	02.46/1	10548.12050.04/07	11.32/0
10541.05310.00	42.05/0	10544.58741.00	68.00/1	10548.04010.01/17	02.46/1	10548.12050.04/11	11.32/0
10541.12050.01/07	11.30/0	10544.63029.00	62.01/0	10548.04010.01/19	02.46/1	10548.21404.00	31.00/0
10541.12413.00	11.50/0	10544.63029.00	62.10/0	10548.04010.01/20	02.46/1	10548.26003.01/05	21.61/0
10541.12898.00	11.10/0	10544.63339.00	62.01/0	10548.04010.01/22	02.46/1	10548.31409.00	04.11/0
10541.21613.00	31.07/0	10544.63339.00	62.10/0	10548.04010.01/24	02.46/0	10548.31410.01	04.10/0
10541.22053.00/10	21.61/0	10548.01060.02	02.80/0	10548.04010.01/25	02.46/0	10548.32061.00	02.21/0
10541.31430.00	04.10/0	10548.01101.01	01.01/0	10548.04010.01/26	02.46/0	10548.32061.00/03	02.21/0
10541.50289.00	61.11/0	10548.01133.01	01.09/0	10548.04010.01/27	02.46/0	10548.32061.00/04	02.21/0
10541.55016.00	67.01/0	10548.01144.00	02.70/0	10548.04010.01/28	02.46/0	10548.32061.00/05	02.21/0
10541.55433.00	67.01/0	10548.01504.00	01.08/0	10548.04010.01/28	02.46/1	10548.32061.01	02.22/0

INDICE NUMERICO
REPERTOIRE NUMERIQUE
NUMERICAL INDEX
NUMMERISCHES SACHVERZEICHNIS
INDICE NUMERICO

10548.32061.01/03	02.22/0	10548.57229.00	81.10/0	10564.44219.01	21.84/0	11600.05030.03/10	42.02/0
10548.32061.01/04	02.22/0	10548.57271.00	91.10/0	10564.45050.00/02	21.30/0	11600.05030.03/11	42.02/0
10548.32061.01/05	02.22/0	10548.57350.00	81.00/0	10564.45050.00/03	21.30/0	11600.05030.03/12	42.02/1
10548.32061.01/16	02.22/0	10548.58702.00	68.00/0	10564.45050.00/08	21.30/0	11600.05030.03/13	42.02/1
10548.32061.01/17	02.22/0	10548.58703.00	68.00/0	10564.61096.00	65.20/0	11600.05030.03/15	42.02/1
10548.32061.01/18	02.22/0	10548.58704.00	68.00/0	10564.61301.00	65.20/0	11600.05030.03/16	42.02/1
10548.32061.01/19	02.22/0	10548.58875.00	69.00/0	10564.65006.00	46.00/0	11600.05030.03/17	42.02/1
10548.42038.01	02.64/0	10548.58975.00	69.30/0	10564.65006.01	46.00/0	11600.05030.03/18	42.02/1
10548.42107.01	02.64/0	10548.61077.01	65.10/0	10564.65177.01	21.82/0	11600.05030.03/19	42.02/1
10548.42326.00	02.64/0	10548.61077.02	65.10/0	10564.65177.01	21.83/0	11600.05030.03/20	42.02/1
10548.45020.02	21.12/0	10548.61078.00	65.10/0	10564.65177.01	46.00/0	11600.05030.03/21	42.02/1
10548.45020.02/02	21.12/0	10548.62487.00	62.30/0	10571.50160.00	66.20/0	11600.05030.03/23	42.02/1
10548.45020.02/03	21.12/0	10548.65079.01	41.10/0	10585.08011.00	02.70/0	11600.05030.05	42.01/0
10548.45020.02/04	21.12/0	10548.80116.00	91.00/0	10600.01238.00	01.20/0	11600.05031.07	42.05/0
10548.45020.02/05	21.12/0	10549.45020.01/05	21.12/0	10600.05604.00	43.01/0	11600.05031.10	42.01/0
10548.45020.02/07	21.12/0	10549.45020.01/06	21.12/0	10600.45528.00	02.80/0	11600.05059.00	43.02/0
10548.45020.02/10	21.12/0	10551.04435.00	02.70/0	10600.45528.00	09.00/0	11600.05059.02	43.07/0
10548.45020.02/12	21.12/0	10555.06030.00	03.27/0	10600.55549.00	67.02/1	11600.05061.00/02	43.02/1
10548.45020.02/16	21.12/0	10555.06030.01	03.27/0	11500.05920.00	41.11/0	11600.05061.00/06	43.02/1
10548.45020.02/17	21.12/0	10555.06030.02	03.27/0	11600.01080.04	01.01/0	11600.05332.01	42.01/0
10548.45020.02/30	21.12/0	10555.06030.03	03.27/0	11600.01081.05	01.01/0	11600.05332.01	42.05/0
10548.45020.03/02	21.10/0	10557.05902.00	41.10/0	11600.01200.00	01.20/0	11600.05521.02	43.07/0
10548.45020.03/07	21.10/0	10562.45020.01/12	21.10/0	11600.01295.00	01.20/0	11600.05604.00	43.07/0
10548.45020.03/10	21.10/0	10562.45020.01/18	21.10/0	11600.01205.00	09.00/0	11600.05604.00	43.08/0
10548.45020.03/39	21.10/0	10562.45020.01/36	21.10/0	11600.01249.03	01.06/0	11600.06353.01	01.04/0
10548.45020.03/32	21.10/0	10562.45020.01/37	21.10/0	11600.01860.02	01.06/0	11600.07950.00	04.10/0
10548.45020.03/33	21.10/0	10562.45020.01/39	21.10/0	11600.02401.01	01.31/0	11600.12041.02	11.50/0
10548.45020.03/38	21.10/0	10564.01177.00	01.06/0	11600.02402.01	01.31/0	11600.12042.02	11.50/0
10548.45020.04	21.10/0	10564.01177.00	09.00/0	11600.04006.02	02.62/0	11600.12043.02	11.51/0
10548.45020.00	21.02/0	10564.01177.07	01.06/0	11600.04006.02	02.63/0	11600.12050.05/03	11.30/0
10548.45020.01	21.02/0	10564.01664.00	02.80/0	11600.04012.00	02.62/0	11600.12050.05/06	11.30/0
10548.45050.00/05	21.30/0	10564.03304.00	01.42/0	11600.04012.00	02.63/0	11600.12050.05/12	11.30/0
10548.45050.01	21.12/0	10564.07256.01	04.10/0	11600.04201.00	02.01/0	11600.12050.06/06	11.31/0
10548.45050.01	21.41/0	10564.12051.04/01	11.21/0	11600.04201.00	09.00/0	11600.12050.06/14	11.31/0
10548.45050.01/02	21.31/0	10564.12051.04/03	11.21/0	11600.04205.00	02.01/0	11600.12050.07	11.32/0
10548.45050.01/04	21.31/0	10564.12051.04/10	11.21/0	11600.04206.00	02.01/0	11600.12050.07/13	11.32/0
10548.45050.01/07	11.21/0	10564.12051.04/10	11.21/1	11600.05030.03/01	42.02/0	11600.12050.07/14	11.32/0
10548.45050.01/07	21.31/0	10564.12051.04/11	11.21/0	11600.05030.03/02	42.02/0	11600.12050.07/17	11.32/0
10548.45050.01/28	21.31/0	10564.12051.04/11	11.21/1	11600.05030.03/03	42.02/0	11600.12050.12	11.31/0
10548.45050.01/29	21.31/0	10564.12051.04/15	11.21/0	11600.05030.03/04	42.02/0	11600.12050.13	11.30/0
10548.53141.00	62.01/0	10564.44105.00	21.82/0	11600.05030.03/05	42.02/0	11600.12051.03	11.20/0
10548.53141.00	62.10/0	10564.44105.00	21.84/0	11600.05030.03/06	42.02/1	11600.12051.04	11.21/0
10548.53141.00	66.31/0	10564.44150.00	21.81/0	11600.05030.03/07	42.02/1	11600.12051.04/13	11.21/0
10548.55671.00	67.01/0	10564.44150.00	21.83/0	11600.05030.03/08	42.02/1	11600.12051.04/13	11.21/1
10548.56362.00	66.11/1	10564.44219.01	21.82/0	11600.05030.03/09	42.02/0	11600.12051.04/30	11.21/0

L1600.12051.04/30	11.21/1	L1600.13214.02	12.16/2	11600.13506.02	12.20/0	11600.15517.02	10.02/0
L1600.12051.04/31	11.21/0	L1600.13217.00	12.16/1	11600.13508.06	12.20/0	11600.15524.00	10.02/0
L1600.12051.04/31	11.21/1	L1600.13217.00	12.16/2	11600.13509.02	12.20/0	11600.17015.01	12.00/0
L1600.12402.00	11.50/0	L1600.13218.02	12.16/2	11600.13534.01	12.00/0	11600.17047.05	14.40/0
L1600.12453.02	11.51/0	L1600.13221.03	12.16/0	11600.13566.02	12.17/0	11600.17065.07	14.10/0
L1600.12453.05	11.51/0	L1600.13223.01	12.16/0	11600.13573.00	12.21/0	11600.17066.07	14.10/0
L1600.12453.07	11.51/0	L1600.13223.02	12.16/0	11600.13573.01	12.21/0	11600.17191.00	14.10/0
L1600.12454.02	11.51/0	L1600.13224.01	12.12/0	11600.13586.05	12.12/0	11600.17200.02	14.30/0
L1600.12454.04	11.51/0	L1600.13224.02	12.12/0	11600.13587.03	12.16/0	11600.17201.00	14.30/0
L1600.12454.06	11.51/0	L1600.13224.03	12.12/0	11600.13589.01	12.12/0	11600.17203.00	14.30/0
L1600.12459.00	11.50/0	L1600.13227.02	12.16/1	11600.13594.02	12.12/0	11600.17204.10	12.16/0
L1600.12460.00	11.51/0	L1600.13227.02	12.16/2	11600.13594.02	12.16/0	11600.17204.11	12.16/0
L1600.12507.01	12.00/0	L1600.13228.02	12.16/1	11600.13594.03	12.12/0	11600.17204.12	12.16/0
L1600.12712.03	11.51/0	L1600.13228.02	12.16/2	11600.13594.03	12.16/0	11600.17204.13	12.16/0
L1600.12713.04	10.01/0	L1600.13229.00	12.16/2	11600.13607.00	12.17/0	11600.17204.14	12.16/0
L1600.12713.04	11.51/0	L1600.13230.02	12.16/2	11600.13657.00	12.21/0	11600.17204.15	12.16/0
L1600.13008.05	12.00/0	L1600.13230.04	12.16/1	11600.13733.00	12.17/0	11600.17204.16	12.16/0
L1600.13010.04	12.00/0	L1600.13230.04	12.16/2	11600.13900.03	12.17/0	11600.17204.17	12.16/0
L1600.13021.05	12.16/1	L1600.13247.00	12.12/0	11600.13900.04	12.17/0	11600.17204.18	12.16/0
L1600.13023.05	12.16/1	L1600.13247.02	12.12/0	11600.13908.00	12.00/0	11600.17204.19	12.16/0
L1600.13025.04	12.16/2	L1600.13248.02	12.16/0	11600.13912.00	12.17/0	11600.17207.00	14.30/0
L1600.13028.04	12.12/0	L1600.13301.15	12.12/0	11600.13942.00	12.00/0	11600.17209.01	14.30/0
L1600.13029.10	12.17/0	L1600.13302.02	12.16/0	11600.13945.00	12.00/0	11600.17211.01	14.10/0
L1600.13031.07	12.16/1	L1600.13302.04	12.16/0	11600.13946.00	12.00/0	11600.17211.03	14.10/0
L1600.13058.06	12.20/0	L1600.13304.07	12.16/0	11600.13954.00	12.20/0	11600.17216.00	14.10/0
L1600.13069.00	12.22/0	L1600.13308.02	12.16/1	11600.15023.09	10.02/0	11600.17224.00	14.10/0
L1600.13078.01	12.02/0	L1600.13320.02	12.16/1	11600.15037.00	10.02/0	11600.17224.01	14.10/0
L1600.13079.00	12.02/0	L1600.13333.00	11.51/0	11600.15110.08	10.02/0	11600.17224.02	14.10/0
L1600.13080.06	12.00/0	L1600.13368.02	12.16/0	11600.15113.04	10.01/0	11600.17224.03	14.10/0
L1600.13081.01	12.02/0	L1600.13371.03	12.16/0	11600.15123.01	10.02/0	11600.17224.04	14.10/0
L1600.13093.00	12.17/0	L1600.13402.00	12.00/0	11600.15123.02	10.02/0	11600.17224.05	14.10/0
L1600.13094.00	12.17/0	L1600.13404.00	12.00/0	11600.15123.03	10.02/0	11600.17224.06	14.10/0
L1600.13095.01	12.17/0	L1600.13419.02	12.16/0	11600.15127.04	10.02/0	11600.17224.07	14.10/0
L1600.13100.07	12.00/0	L1600.13420.02	12.12/0	11600.15132.02	10.02/0	11600.17224.08	14.10/0
L1600.13140.07	12.00/0	L1600.13421.01	12.12/0	11600.15145.24	10.02/0	11600.17224.09	14.10/0
L1600.13170.00	12.02/0	L1600.13421.01	12.16/0	11600.15147.03	10.02/0	11600.17224.10	14.10/0
L1600.13183.04	12.00/0	L1600.13498.00	12.12/0	11600.15167.01	10.01/0	11600.17224.11	14.10/0
L1600.13188.00	12.02/0	L1600.13498.02	12.12/0	11600.15171.12	01.31/0	11600.17224.12	14.10/0
L1600.13206.02	12.12/0	L1600.13499.03	12.02/0	11600.15185.04	10.02/0	11600.17224.13	14.10/0
L1600.13208.07	12.17/0	L1600.13500.09	12.20/0	11600.15193.05	10.02/0	11600.17224.14	14.10/0
L1600.13213.00	12.16/1	L1600.13501.09	12.20/0	11600.15194.09	10.02/0	11600.17224.15	14.10/0
L1600.13213.00	12.16/2	L1600.13502.09	12.20/0	11600.15195.00	10.02/0	11600.17224.16	14.10/0
L1600.13213.01	12.16/1	L1600.13503.00	12.20/0	11600.15503.11	10.02/0	11600.17224.17	14.10/0
L1600.13213.01	12.16/2	L1600.13504.00	12.20/0	11600.15507.18	10.02/0	11600.17224.18	14.10/0
L1600.13214.01	12.16/2	L1600.13505.05	12.20/0	11600.15513.01	10.02/0	11600.17224.19	14.10/0

INDICE NUMERICO
REPERTOIRE NUMERIQUE
NUMERICAL INDEX
NUMMERISCHES SACHVERZEICHNIS
INDICE NUMERICO

11600.17224.20	14.10/0	11600.21327.00	31.01/0	11600.23002.21/16	32.02/0	11600.23002.24/03	32.04/0
11600.17224.21	14.10/0	11600.21336.01	31.02/0	11600.23002.21/17	32.02/0	11600.23002.24/04	32.04/0
11600.17224.22	14.10/0	11600.21342.00	31.01/0	11600.23002.21/18	32.02/0	11600.23002.24/10	32.03/0
11600.17224.23	14.10/0	11600.21357.01	31.02/0	11600.23002.21/19	32.02/0	11600.23002.24/15	32.04/0
11600.17224.24	14.10/0	11600.21359.00	31.05/0	11600.23002.21/20	32.02/0	11600.23002.24/16	32.04/0
11600.17293.00	14.10/0	11600.21389.01	31.05/0	11600.23002.21/21	32.02/0	11600.23002.24/17	32.04/0
11600.17294.00	14.10/0	11600.21390.00	31.05/0	11600.23002.21/23	32.02/0	11600.23002.24/18	32.04/0
11600.17319.04	14.40/0	11600.21400.00	31.00/0	11600.23002.21/24	32.02/0	11600.23002.24/19	32.04/0
11600.17332.00	14.10/0	11600.21402.00	31.00/0	11600.23002.21/25	32.02/0	11600.23002.24/20	32.04/0
11600.17332.02	14.10/0	11600.21408.00	31.00/0	11600.23002.21/26	32.02/0	11600.23002.24/21	32.04/0
11600.17356.01	14.40/0	11600.21413.00	31.00/0	11600.23002.21/28	32.02/0	11600.23002.24/22	32.04/0
11600.17357.01	21.60/0	11600.21425.00	31.00/0	11600.23002.21/29	32.02/0	11600.23002.24/34	32.04/0
11600.17608.00	14.10/0	11600.21505.09	31.05/0	11600.23002.21/30	32.02/0	11600.23022.03	32.11/0
11600.17608.01	14.10/0	11600.21506.09	31.05/0	11600.23002.21/31	32.01/0	11600.23024.00	32.11/0
11600.17608.02	14.10/0	11600.21527.00	31.03/0	11600.23002.21/32	32.01/0	11600.23074.02	32.11/0
11600.17924.00	14.40/0	11600.21556.01	31.05/0	11600.23002.21/33	32.01/0	11600.23089.00	32.11/0
11600.17931.00	12.02/0	11600.21591.00	31.02/0	11600.23002.21/34	32.01/0	11600.23092.04	32.11/0
11600.17932.00	14.40/0	11600.21592.00	31.05/0	11600.23002.21/35	32.01/0	11600.23097.00	32.01/0
11600.17933.00	14.40/0	11600.21594.00	31.02/0	11600.23002.21/36	32.01/0	11600.23097.00	32.03/0
11600.17934.00	14.40/0	11600.21600.12	31.07/0	11600.23002.21/37	32.01/0	11600.23113.01	32.01/0
11600.17935.00	14.40/0	11600.21602.04	31.07/0	11600.23002.21/38	32.01/0	11600.23113.01	32.03/0
11600.17936.00	14.40/0	11600.21603.04	31.07/0	11600.23002.22/01	32.04/0	11600.23142.02	32.01/0
11600.21010.07	31.00/0	11600.21623.00	31.02/0	11600.23002.22/05	32.04/0	11600.23142.02	32.03/0
11600.21011.09	31.00/0	11600.21730.03	31.00/0	11600.23002.22/06	32.04/0	11600.23144.03	32.01/0
11600.21019.00	31.02/0	11600.21757.00	31.02/0	11600.23002.22/07	32.03/0	11600.23144.03	32.03/0
11600.21019.03	31.02/0	11600.22014.00	21.50/0	11600.23002.22/08	32.03/0	11600.23171.02	32.11/0
11600.21020.04	31.01/0	11600.22049.00	21.50/0	11600.23002.22/09	32.03/0	11600.23171.02	66.00/0
11600.21024.00	31.02/0	11600.22050.00	21.50/0	11600.23002.22/11	32.03/0	11600.23171.03	32.11/0
11600.21037.04	31.01/0	11600.22122.00	21.50/0	11600.23002.22/13	32.03/0	11600.23171.03	66.00/0
11600.21038.01	31.01/0	11600.22123.00	21.50/0	11600.23002.22/14	32.04/0	11600.23172.00	32.11/0
11600.21039.01	31.01/0	11600.23002.21	32.01/0	11600.23002.22/15	32.04/0	11600.23196.00	32.10/0
11600.21053.01	31.05/0	11600.23002.21/01	32.02/0	11600.23002.22/16	32.04/0	11600.23223.00	32.11/0
11600.21064.00	31.07/0	11600.23002.21/03	32.02/0	11600.23002.22/17	32.04/0	11600.23230.06	32.11/0
11600.21070.06	31.06/0	11600.23002.21/04	32.02/0	11600.23002.22/23	32.04/0	11600.23325.00	32.01/0
11600.21256.00	31.01/0	11600.23002.21/05	32.02/0	11600.23002.22/24	32.04/0	11600.23325.00	32.03/0
11600.21257.00	31.01/0	11600.23002.21/06	32.02/0	11600.23002.22/25	32.04/0	11600.23762.01	32.11/0
11600.21259.00	31.01/0	11600.23002.21/07	32.01/0	11600.23002.22/26	32.04/0	11600.23779.00	32.11/0
11600.21263.02	31.01/0	11600.23002.21/08	32.01/0	11600.23002.22/27	32.04/0	11600.23783.00	32.03/0
11600.21286.00	31.01/0	11600.23002.21/09	32.01/0	11600.23002.22/28	32.04/0	11600.24040.00	32.03/0
11600.21287.00	31.01/0	11600.23002.21/10	32.01/0	11600.23002.22/29	32.04/0	11600.24041.01	32.01/0
11600.21288.02	31.01/0	11600.23002.21/11	32.01/0	11600.23002.22/30	32.04/0	11600.24041.01	32.03/0
11600.21289.00	31.01/0	11600.23002.21/12	32.01/0	11600.23002.22/31	32.04/0	11600.24121.00	32.01/0
11600.21301.01	31.02/0	11600.23002.21/13	32.01/0	11600.23002.22/32	32.04/0	11600.24121.00	32.03/0
11600.21318.01	31.03/0	11600.23002.21/14	32.02/0	11600.23002.22/33	32.04/0	11600.25012.03	31.13/0
11600.21323.01	31.01/0	11600.23002.21/15	32.02/0	11600.23002.24	32.03/0	11600.25016.03	31.13/0

INDICE NUMERICO

REPERTOIRE NUMERIQUE
NUMERICAL INDEX
NUMMERISCHES SACHVERZEICHNIS
INDICE NUMERICO

11600.25033.04	31.13/0	11600.26052.00/17	21.61/0	11600.44015.02	21.81/0	11600.53092.02	67.30/0
11600.25034.03	31.13/0	11600.26?15.04	21.60/0	11600.44050.04	02.62/0	11600.53220.02	61.50/0
11600.25041.03	31.10/0	11600.28010.00	31.20/0	11600.44107.00	21.82/0	11600.53358.02	61.51/0
11600.25064.02	31.16/0	11600.28024.00	31.20/0	11600.44107.00	21.83/0	11600.53359.02	61.51/0
11600.25067.01	31.13/0	11600.30009.00	02.82/0	11600.44218.01	21.82/0	11600.53360.01	64.00/0
11600.25068.01	31.13/0	11600.30082.00	02.85/0	11600.44218.01	21.83/0	11600.53361.01	64.00/0
11600.25069.10	31.16/0	11600.30083.00	02.85/0	11600.44219.01	21.82/0	11600.53440.02	65.00/0
11600.25070.10	31.11/0	11600.30204.01	02.82/0	11600.44219.01	21.83/0	11600.53440.03	65.00/0
11600.25084.10	31.16/0	11600.30316.00	02.85/0	11600.44220.00	21.81/0	11600.53440.04	65.00/0
11600.25086.01	31.13/0	11600.30404.00	02.85/0	11600.44220.00	21.84/0	11600.54270.01	66.10/0
11600.25152.00	31.14/0	11600.30815.00	02.85/0	11600.44573.00	02.62/0	11600.54315.01	69.00/0
11600.25175.00	31.14/0	11600.30843.00	02.85/0	11600.44575.02	02.62/0	11600.55120.01	67.00/0
11600.25367.01	31.14/0	11600.31406.00	04.10/0	11600.44575.02	02.63/0	11600.55137.03	67.00/0
11600.25401.03	31.10/0	11600.31407.00	04.10/0	11600.45027.03/01	21.10/0	11600.55138.03	67.00/0
11600.25401.08	31.10/0	11600.31408.00	04.10/0	11600.50029.01	61.11/0	11600.55167.03	61.51/0
11600.25417.01	31.10/0	11600.31800.02	04.11/0	11600.50041.01	61.11/0	11600.55437.04	61.51/0
11600.25457.03	31.10/0	11600.31801.02	04.11/0	11600.50051.01	61.11/0	11600.55589.01	64.00/2
11600.25458.03	31.10/0	11600.31913.01	04.11/0	11600.50056.01	66.20/0	11600.55700.01	61.51/0
11600.25460.03	31.10/0	11600.32219.00	02.03/0	11600.50064.02	61.11/0	11600.55700.02	61.51/0
11600.25471.00	31.14/0	11600.32220.01	02.03/0	11600.50065.02	61.11/0	11600.55732.01	61.51/0
11600.25503.01	31.11/0	11600.32903.01	02.03/0	11600.50067.01	61.11/0	11600.55732.02	61.51/0
11600.25506.01	31.13/0	11600.41117.03	12.22/0	11600.50068.01	61.11/0	11600.56014.01	66.11/0
11600.25514.01	31.11/0	11600.41128.02	12.21/0	11600.50093.01	61.10/0	11600.56051.02	66.10/0
11600.25528.05	31.11/0	11600.41146.02	12.22/0	11600.50132.01	66.20/0	11600.56052.02	66.10/0
11600.25528.06	31.11/0	11600.41192.02	12.22/0	11600.50158.02	66.20/0	11600.56168.02	66.11/0
11600.25528.07	31.11/0	11600.41194.00	12.22/0	11600.50225.01	66.20/0	11600.56189.01	66.11/0
11600.25535.04	31.11/0	11600.41309.00	12.22/0	11600.50228.02	66.20/0	11600.56200.01	66.10/0
11600.25601.00	31.16/0	11600.41404.01	12.22/0	11600.50260.02	66.20/0	11600.56259.01	66.11/0
11600.25602.00	31.16/0	11600.41610.00	12.22/0	11600.50241.01	66.20/0	11600.56276.01	66.11/0
11600.25603.01	31.16/0	11600.41650.02	12.22/0	11600.50277.02	61.11/0	11600.56281.01	66.10/0
11600.25605.00	31.16/0	11600.42030.01	21.72/0	11600.50560.01	66.20/0	11600.56342.02	61.51/0
11600.25606.00	31.16/0	11600.42042.00	21.71/0	11600.51014.01	61.21/0	11600.56342.02	64.00/0
11600.25610.02	31.16/0	11600.42043.02	21.71/0	11600.51015.01	61.21/0	11600.56346.01	66.11/0
11600.25651.00	31.13/0	11600.42314.01	21.71/0	11600.51054.01	61.20/0	11600.56363.01	66.11/1
11600.25652.01	31.14/0	11600.42315.01	21.71/0	11600.51056.01	61.20/0	11600.56374.03	66.11/1
11600.25658.01	31.11/0	11600.42316.01	21.71/0	11600.51108.01	61.11/0	11600.56375.01	66.11/1
11600.25659.00	31.10/0	11600.42317.01	21.71/0	11600.52025.01	61.30/0	11600.56377.01	66.11/0
11600.25660.01	31.10/0	11600.42319.02	21.71/0	11600.52026.01	61.30/0	11600.56378.01	02.64/0
11600.25975.00	31.16/0	11600.42320.01	21.71/0	11600.52027.01	61.31/0	11600.57046.01	81.10/0
11600.26003.01/03	21.61/0	11600.42323.01	21.71/0	11600.52049.01	61.30/0	11600.57104.01	81.00/0
11600.26003.01/25	21.61/0	11600.42327.01	21.71/0	11600.52068.01	61.31/0	11600.57178.01	81.10/0
11600.26003.01/31	21.61/0	11600.42330.00	21.71/0	11600.52102.01	61.30/0	11600.57179.01	81.00/0
11600.26003.04	21.61/0	11600.42334.01	21.71/0	11600.53013.02	61.51/0	11600.57246.01	81.10/0
11600.26004.04	21.61/0	11600.42363.00	21.72/0	11600.53070.02	61.51/0	11600.58553.01	68.00/0
11600.26052.00/13	21.61/0	11600.42436.00	21.72/0	11600.53083.01	61.41/0	11600.59396.01	63.00/0

INDICE NUMERICO
REPERTOIRE NUMERIQUE
NUMERICAL INDEX
NUMMERISCHES SACHVERZEICHNIS
INDICE NUMERICO

11600.61387.01	65.10/0	11602.23002.02/01	32.04/0	11608.04010.00/24	02.40/0	11608.04011.05	02.46/0
11600.61387.01	65.20/0	11602.23002.02/07	32.03/0	11608.04010.00/25	02.40/0	11608.04011.06	02.40/0
11600.62110.03	69.10/0	11603.12051.00/05	11.21/0	11608.04010.00/28	02.41/0	11608.05030.02	42.05/0
11600.65015.02	44.72/0	11603.12051.00/05	11.21/1	11608.04010.00/29	02.41/0	11608.05902.00	01.08/0
11600.65015.03	44.72/0	11603.44050.01	02.63/0	11608.04010.00/30	02.41/0	11608.06010.00	03.10/0
11600.65015.04	44.72/0	11603.44142.00	21.83/0	11608.04010.00/31	02.41/0	11608.06013.00	03.10/0
11600.65015.05	44.72/0	11603.44519.01	02.62/0	11608.04010.00/42	02.41/0	11608.06321.00	03.10/0
11600.65021.01	46.00/0	11603.44519.03	02.63/0	11608.04010.00/43	02.41/0	11608.07021.00	04.10/0
11600.65021.02	46.00/0	11603.44586.00	02.63/0	11608.04010.00/44	02.41/0	11608.07021.00/01	04.10/0
11600.65519.03	45.07/0	11603.65513.04	45.01/0	11608.04010.00/55	02.40/0	11608.07021.00/02	04.10/0
11600.65521.03	45.07/0	11603.65516.04	45.01/0	11608.04010.00/60	02.40/0	11608.07021.01	04.10/0
11600.65521.14	45.01/0	11603.65521.04	45.01/0	11608.04010.00/61	02.40/0	11608.07021.01/01	04.10/0
11600.65522.03	45.07/0	11604.65052.14	45.02/0	11608.04010.00/62	02.40/0	11608.07021.01/02	04.10/0
11600.65522.04	45.01/0	11608.01010.03	01.01/0	11608.04010.00/63	02.40/0	11608.07235.00	04.10/0
11600.65535.03	45.08/0	11608.01031.01	01.04/0	11608.04010.00/64	02.40/0	11608.07237.00	04.00/0
11600.65535.04	45.02/0	11608.01053.05	01.08/0	11608.04010.00/65	02.40/0	11608.07256.00	01.08/0
11600.65536.03	45.08/0	11608.01062.00	02.80/0	11608.04010.00/77	02.41/0	11608.07266.00	04.10/0
11600.65536.04	45.02/0	11608.01062.01	02.80/0	11608.04010.00/78	02.41/0	11608.08055.00	02.70/0
11600.65544.03	45.07/0	11608.01062.02	02.80/0	11608.04010.00/79	02.41/0	11608.08189.02	02.70/0
11601.01720.00	01.90/0	11608.01062.03	02.80/0	11608.04010.00/80	02.41/0	11608.12030.00	11.50/0
11601.01720.00	02.82/0	11608.01062.04	02.80/0	11608.04010.00/81	02.41/0	11608.12032.08	11.50/0
11601.13027.02	12.16/2	11608.01071.00	02.82/0	11608.04010.00/84	02.41/0	11608.12091.04	11.10/0
11601.13225.04	12.16/0	11608.01072.00	02.82/0	11608.04010.00/88	02.41/0	11608.12906.00	11.50/0
11601.21419.00	21.50/0	11608.01107.02	01.01/0	11608.04010.00/89	02.41/0	11608.13078.00	12.02/0
11601.23052.00	32.10/0	11608.01140.00	01.02/0	11608.04010.00/90	02.41/0	11608.13080.00	12.00/0
11601.28010.04	31.20/0	11608.01303.00	01.04/0	11608.04010.00/92	02.41/0	11608.13081.00	12.02/0
11601.28023.01	31.20/0	11608.01303.00	09.00/0	11608.04010.00/93	02.41/0	11608.13401.00	12.00/0
11601.45055.01	21.01/0	11608.01316.00	01.04/0	11608.04010.00/94	02.41/0	11608.15301.00	10.02/0
11601.45056.01	21.01/0	11608.02020.00	01.31/0	11608.04010.00/95	02.41/0	11608.15302.00	10.02/0
11601.45059.01	21.01/0	11608.02063.08	01.32/0	11608.04010.00/96	02.41/0	11608.15506.00	10.02/0
11601.45060.01	21.01/0	11608.02106.00/01	01.32/0	11608.04010.00/97	02.40/0	11608.15550.00	10.02/0
11601.45079.01	21.01/0	11608.02111.04	01.32/0	11608.04010.00/99	02.40/0	11608.17021.00	14.10/0
11601.45535.00	21.01/0	11608.02111.05	01.32/0	11608.04010.05	02.46/0	11608.23052.02	32.10/0
11601.45544.00	21.01/0	11608.02112.03	01.32/0	11608.04010.05/02	02.46/0	11608.23057.00	32.10/0
11601.45544.02	21.01/0	11608.02112.04	01.32/0	11608.04010.05/03	02.46/0	11608.23062.00	32.10/0
11601.45545.00	21.01/0	11608.02113.02	01.31/0	11608.04010.05/09	02.46/1	11608.23072.00	32.10/0
11601.45545.02	21.01/0	11608.02204.00	01.31/0	11608.04010.05/11	02.46/0	11608.23084.00	32.10/0
11601.45733.00	21.02/0	11608.02205.00	01.31/0	11608.04010.05/18	02.46/1	11608.23571.00	32.10/0
11601.53500.00	81.00/0	11608.02600.00	01.31/0	11608.04010.05/21	02.46/0	11608.23572.00	32.10/0
11601.61043.01	64.00/1	11608.03013.00	01.41/0	11608.04010.05/23	02.46/1	11608.23577.00	32.10/0
11601.63044.02	82.10/0	11608.03107.00	01.41/0	11608.04010.05/30	02.46/1	11608.23578.00	32.10/0
11601.63044.04	82.10/0	11608.04010.00/A0	02.41/0	11608.04010.05/31	02.46/1	11608.23701.00	32.10/0
11601.66010.00	46.10/0	11608.04010.00/02	02.41/0	11608.04010.06	02.40/0	11608.23747.00	32.10/0
11601.66011.00	46.10/0	11608.04010.00/21	02.41/0	11608.04010.06/26	02.40/0	11608.28043.00	31.20/0
11602.23002.02	32.03/0	11608.04010.00/23	02.40/0	11608.04010.06/27	02.40/0	11608.28043.01	31.20/0

INDICE NUMERICO
REPERTOIRE NUMERIQUE
NUMERICAL INDEX
NUMMERISCHES SACHVERZEICHNIS
INDICE NUMERICO

11608.28044.00	31.20/0	11608.61034.00	62.30/0	11609.45022.00	21.41/0	11610.05061.03/14	43.02/2
11608.28044.01	31.20/0	11608.61044.00	64.00/1	11609.45022.01	21.40/0	11610.05061.03/15	43.02/0
11608.28045.00	31.20/0	11608.61069.01	62.30/0	11609.45054.00	21.01/0	11610.05061.03/16	43.02/2
11608.28045.01	31.20/0	11608.61353.00	62.30/0	11609.50041.00	61.11/0	11610.05061.03/17	43.02/2
11608.28046.00	31.20/0	11608.61379.00	62.30/0	11609.50066.00	61.11/0	11610.05061.03/19	43.02/2
11608.28046.01	31.20/0	11608.61380.00	62.30/0	11609.61044.00	64.00/1	11610.05061.03/20	43.02/2
11608.28047.00	31.20/0	11608.61384.00	65.20/0	11609.67432.01	69.00/0	11610.05061.03/21	43.02/2
11608.28047.01	31.20/0	11608.62099.01	62.30/0	11610.02103.00	04.00/0	11610.05061.03/23	43.02/2
11608.28143.00	31.20/0	11608.62391.00	69.10/0	11610.05028.02	43.07/0	11610.05061.03/24	43.02/0
11608.28144.00	31.20/0	11608.62392.00	69.10/0	11610.05059.00	43.08/0	11610.05061.03/25	43.02/0
11608.28145.00	31.20/0	11608.63196.00	82.10/0	11610.05060.01	43.08/0	11610.05061.03/26	43.02/2
11608.28146.00	31.20/0	11608.65021.00	46.00/0	11610.05060.03	43.01/0	11610.05061.03/27	43.02/2
11608.31042.00	04.10/0	11608.65021.01	46.00/0	11610.05060.06	43.07/0	11610.05061.03/28	43.02/2
11608.31042.01	04.10/0	11608.65021.02	46.00/0	11610.05061.02/01	43.07/2	11610.05061.03/29	43.02/1
11608.31050.00	04.11/0	11608.65021.03	46.00/0	11610.05061.02/02	43.07/1	11610.05061.03/30	43.02/2
11608.31055.00	04.11/0	11608.65038.02	66.10/0	11610.05061.02/03	43.07/0	11610.05061.03/31	43.02/0
11608.42003.01	21.71/0	11608.65048.00	46.00/0	11610.05061.02/04	43.07/1	11610.05068.03	43.08/0
11608.42038.01	21.71/0	11608.65052.04	45.02/0	11610.05061.02/05	43.07/2	11610.05068.04	43.01/0
11608.50410.01	61.10/0	11608.65070.00	64.00/1	11610.05061.02/06	43.07/1	11610.05068.06	43.07/0
11608.53016.20	64.00/0	11608.65521.03	45.07/0	11610.05061.02/07	43.07/1	11610.05170.00	43.01/0
11608.53360.00	64.00/0	11608.65521.04	45.01/0	11610.05061.02/08	43.07/2	11610.05170.00	43.07/0
11608.53361.00	64.00/0	11608.65521.14	45.01/0	11610.05061.02/09	43.07/2	11610.05170.00	43.08/0
11608.53458.00	67.30/0	11608.66116.00	46.10/0	11610.05061.02/10	43.07/1	11610.05171.01	43.01/0
11608.55236.00	64.00/2	11608.79013.00	01.90/0	11610.05061.02/11	43.07/1	11610.05171.01	43.07/0
11608.55676.00	64.00/2	11608.95050.00	65.20/0	11610.05061.02/13	43.07/1	11610.05171.01	43.08/0
11608.55676.00	67.02/0	11608.95075.00	65.10/0	11610.05061.02/14	43.07/1	11610.05172.00	43.01/0
11608.56016.00	66.11/1	11608.95075.00	65.20/0	11610.05061.02/15	43.07/0	11610.05172.00	43.07/0
11608.56205.00	66.11/1	11609.01034.00	02.70/1	11610.05061.02/16	43.07/2	11610.05172.00	43.08/0
11608.56361.00	66.11/1	11609.01146.00	02.70/1	11610.05061.02/17	43.07/1	11610.05503.00	43.01/0
11608.56376.00	66.11/0	11609.01147.00	02.70/1	11610.05061.02/19	43.07/1	11610.05503.00	43.07/0
11608.57004.01	81.10/0	11609.12051.00	11.21/1	11610.05061.02/19	43.07/1	11610.05503.00	43.08/0
11608.57016.00	81.10/0	11609.12051.00/01	11.21/1	11610.05061.02/20	43.07/2	11610.05521.00	43.08/0
11608.57036.00	81.10/0	11609.23070.00	32.10/0	11610.05061.02/21	43.07/2	11610.08010.05	02.70/0
11608.57215.00	81.10/0	11609.44015.00	21.83/0	11610.05061.02/22	43.07/0	11610.12092.00	11.10/0
11608.57220.00	81.00/0	11609.44022.00	21.84/0	11610.05061.03/01	43.02/0	11610.15002.05	10.01/0
11608.57221.00	81.00/0	11609.44033.00	21.84/0	11610.05061.03/03	43.02/2	11610.21050.00	31.02/0
11608.57226.00	81.10/0	11609.44035.01	21.84/0	11610.05061.03/04	43.02/2	11610.23011.00	32.11/0
11608.57386.00	81.10/0	11609.44125.00	21.83/0	11610.05061.03/05	43.02/2	11610.23031.00	32.11/0
11608.57387.00	81.10/0	11609.44127.00	21.83/0	11610.05061.03/07	43.02/2	11610.23070.00	32.10/0
11608.57388.00	81.10/0	11609.44224.00	21.84/0	11610.05061.03/08	43.02/2	11610.23070.01	32.10/0
11608.59399.00	63.00/0	11609.44229.00	21.84/0	11610.05061.03/09	43.02/1	11610.23101.00	32.10/0
11608.59399.00	63.10/0	11609.44302.01	21.83/0	11610.05061.03/10	43.02/1	11610.23102.00	32.10/0
11608.59470.00	63.00/0	11609.44330.00	21.84/0	11610.05061.03/11	43.02/0	11610.23196.00	32.01/0
11608.59470.00	63.10/0	11609.45020.01	21.40/0	11610.05061.03/12	43.02/1	11610.23196.00	32.03/0
11608.59575.00	63.20/0	11609.45020.03	21.41/0	11610.05061.03/13	43.02/2	11610.23196.01	32.01/0

INDICE NUMERICO
REPERTOIRE NUMERIQUE
NUMERICAL INDEX
NUMMERISCHES SACHVERZEICHNIS
INDICE NUMERICO

11610.23796.01	32.03/0	11610.50065.00	61.11/0	11610.53044.00	61.41/0	11610.54315.00	63.30/0
11610.23797.00	32.01/0	11610.50066.00	61.11/0	11610.53054.01	61.41/0	11610.54330.00	63.30/0
11610.23797.00	32.03/0	11610.50070.00	61.10/0	11610.53057.00	61.10/0	11610.54335.00	63.30/0
11610.23797.01	32.01/0	11610.50086.00	61.10/0	11610.53067.00	66.11/0	11610.54336.00	63.30/0
11610.23797.01	32.03/0	11610.50094.00	61.10/0	11610.53099.00	61.51/0	11610.54392.00	63.20/0
11610.25040.00	31.10/0	11610.50602.00	61.11/0	11610.53132.00	61.40/0	11610.54398.00	61.60/0
11610.25510.01	31.11/0	11610.51036.00	61.20/0	11610.53195.00	61.40/0	11610.54399.00	61.60/0
11610.30002.00	02.82/0	11610.51041.00	61.21/0	11610.53205.01	61.50/0	11610.54406.00	61.70/0
11610.30003.03	02.82/0	11610.51042.00	61.21/0	11610.53206.01	61.50/0	11610.54408.00	63.30/0
11610.30019.00	02.82/0	11610.51081.00	61.20/0	11610.53218.00	61.50/0	11610.54417.10	61.60/0
11610.31041.00	04.10/0	11610.51082.00	61.20/0	11610.53225.00	61.51/0	11610.54418.10	61.60/0
11610.32010.00	02.03/0	11610.52002.00	61.31/0	11610.53300.00	61.51/0	11610.54423.01	61.70/0
11610.32018.03	02.03/0	11610.52009.00	61.31/0	11610.53334.00	61.40/0	11610.54903.00	61.70/0
11610.32019.01	02.03/0	11610.52010.00	61.31/0	11610.53335.00	61.40/0	11610.54904.00	61.70/0
11610.32050.00	02.03/0	11610.52011.00	61.31/0	11610.53387.00	61.11/0	11610.55019.01	67.01/0
11610.32112.01	02.03/0	11610.52016.00	61.31/0	11610.53388.00	61.11/0	11610.55028.20	67.02/0
11610.32136.01	02.03/0	11610.52043.00	61.31/0	11610.53504.30	65.00/0	11610.55030.20	64.00/2
11610.32175.01	02.03/0	11610.52044.00	61.30/0	11610.53504.31	65.00/0	11610.55039.00	67.02/1
11610.32801.00	02.04/0	11610.52046.00	61.31/0	11610.53555.01	61.40/0	11610.55040.00	67.02/1
11610.41010.01	12.22/0	11610.52047.00	61.30/0	11610.53557.10	65.00/0	11610.55042.00	67.00/0
11610.41040.04	12.22/0	11610.52055.00	61.30/0	11610.53558.10	65.00/0	11610.55043.00	67.00/0
11610.41062.00	12.22/0	11610.52059.00	61.31/0	11610.53559.10	65.00/0	11610.55059.00	67.03/0
11610.41306.00	12.21/0	11610.52084.00	61.31/0	11610.53902.00	61.40/0	11610.55060.00	67.03/0
11610.44021.01	21.81/0	11610.52135.00	61.30/0	11610.53903.00	61.40/0	11610.55074.00	67.02/1
11610.44119.00	21.82/0	11610.52136.00	61.30/0	11610.54003.00	63.30/0	11610.55075.00	67.02/1
11610.44127.00	21.82/0	11610.52185.00	61.31/0	11610.54013.00	61.70/0	11610.55078.10	67.02/0
11610.44302.00	21.81/0	11610.52187.00	61.30/0	11610.54028.00	61.60/0	11610.55078.20	67.02/0
11610.45021.00	21.12/0	11610.52238.00	61.31/0	11610.54030.00	61.70/0	11610.55079.10	67.02/0
11610.45021.00	21.41/0	11610.52239.00	61.31/0	11610.54031.00	61.70/0	11610.55079.20	67.02/0
11610.45021.01	21.10/0	11610.52276.00	61.31/0	11610.54040.00	61.60/0	11610.55080.00	67.02/1
11610.45021.01	21.40/0	11610.53009.00	61.11/0	11610.54041.00	61.60/0	11610.55081.00	67.02/1
11610.45022.02	21.12/0	11610.53015.00	61.41/0	11610.54046.00	61.40/0	11610.55085.01	66.00/0
11610.45027.03	21.10/0	11610.53019.00	61.51/0	11610.54075.00	63.30/0	11610.55085.01	67.00/0
11610.45053.00	21.03/0	11610.53020.00	61.40/0	11610.54076.00	63.30/0	11610.55086.01	66.00/0
11610.45054.01	21.01/0	11610.53024.00	61.41/0	11610.54098.00	61.41/0	11610.55086.01	67.00/0
11610.45058.01	21.01/0	11610.53025.00	61.41/0	11610.54099.00	61.41/0	11610.55113.00	67.00/0
11610.49000.00	61.00/0	11610.53028.00	61.50/0	11610.54109.00	61.60/0	11610.55236.00	67.02/1
11610.49200.00	61.00/0	11610.53029.00	61.50/0	11610.54110.00	61.60/0	11610.55245.00	67.02/1
11610.50001.00	61.10/0	11610.53030.00	61.50/0	11610.54118.00	61.30/0	11610.55246.00	67.02/1
11610.50015.00	61.11/0	11610.53031.00	61.50/0	11610.54128.00	61.70/0	11610.55263.00	63.20/0
11610.50037.00	61.10/0	11610.53034.00	61.41/0	11610.54130.00	61.70/0	11610.55263.00	67.03/0
11610.50042.00	61.10/0	11610.53035.00	61.40/0	11610.54133.00	61.70/0	11610.55271.12	67.02/1
11610.50043.00	61.10/0	11610.53036.00	61.40/0	11610.54176.00	61.70/0	11610.55271.13	64.00/2
11610.50044.00	61.10/0	11610.53040.00	61.11/0	11610.54237.00	61.60/0	11610.55271.14	64.00/2
11610.50050.00	61.10/0	11610.53041.00	61.11/0	11610.54238.00	61.60/0	11610.55271.15	64.00/2

INDICE NUMERICO
REPERTOIRE NUMERIQUE
NUMERICAL INDEX
NUMMERISCHES SACHVERZEICHNIS
INDICE NUMERICO

11610.55272.12	67.02/1	11610.58001.26	69.30/0	11610.59002.05	63.10/0	11610.60025.01	67.03/0
11610.55272.13	64.00/2	11610.58001.36	69.30/0	11610.59027.00	63.30/0	11610.60032.10	67.02/1
11610.55272.14	64.00/2	11610.58001.61	69.30/0	11610.59028.00	63.30/0	11610.60033.10	67.02/1
11610.55272.15	64.00/2	11610.58001.73	69.30/0	11610.59031.00	63.30/0	11610.60035.01	64.00/2
11610.55445.01	67.02/1	11610.58001.82	69.30/0	11610.59075.05	63.00/0	11610.60036.01	64.00/2
11610.55446.01	67.02/1	11610.58001.95	69.30/0	11610.59076.05	63.00/0	11610.60048.00	63.20/0
11610.55466.01	67.02/1	11610.58002.01	69.30/0	11610.59077.05	63.10/0	11610.60049.00	63.20/0
11610.55467.01	67.02/1	11610.58002.26	69.30/0	11610.59078.05	63.10/0	11610.60055.00	67.03/0
11610.55491.10	67.03/0	11610.58002.36	69.30/0	11610.59141.00	63.30/0	11610.60056.00	67.03/0
11610.55492.10	67.03/0	11610.58002.61	69.30/0	11610.59142.00	63.30/0	11610.60057.00	67.03/0
11610.55638.00	67.00/0	11610.58002.73	69.30/0	11610.59156.01	63.20/0	11610.60058.00	67.03/0
11610.55639.00	67.00/0	11610.58002.82	69.30/0	11610.59157.01	63.20/0	11610.60081.00	67.02/0
11610.55748.00	64.00/2	11610.58002.95	69.30/0	11610.59160.01	63.20/1	11610.60089.01	61.40/0
11610.55748.00	67.02/0	11610.58018.26	69.30/0	11610.59201.00	64.00/0	11610.60757.00	67.01/0
11610.55808.00	67.02/1	11610.58018.36	69.30/0	11610.59202.00	64.00/0	11610.61002.00	64.00/1
11610.55824.00	67.03/0	11610.58018.61	69.30/0	11610.59217.01	63.20/1	11610.61010.01	64.00/1
11610.55828.02	67.02/1	11610.58018.73	69.30/0	11610.59218.01	63.20/1	11610.61011.00	64.00/1
11610.55829.02	67.02/1	11610.58018.82	69.30/0	11610.59222.01	63.20/1	11610.61013.01	62.30/0
11610.56024.02	66.31/0	11610.58018.95	69.30/0	11610.59247.00	63.10/0	11610.61020.01	62.30/0
11610.56030.00	66.10/0	11610.58023.20	68.00/0	11610.59265.01	63.20/0	11610.61038.00	66.00/0
11610.56031.00	66.30/0	11610.58024.20	68.00/0	11610.59266.01	63.20/0	11610.61051.00	65.00/0
11610.56036.00	66.00/0	11610.58107.00	68.00/0	11610.59267.01	63.20/0	11610.61052.00	65.00/0
11610.56036.00	66.31/0	11610.58308.10	68.00/0	11610.59268.01	63.20/0	11610.61082.01	62.30/0
11610.56040.00	66.11/0	11610.58702.10	68.00/0	11610.59275.01	63.20/0	11610.61128.00	66.00/0
11610.56109.00	66.30/0	11610.58817.01	69.30/0	11610.59276.01	63.20/0	11610.61129.00	66.00/0
11610.56114.00	66.30/0	11610.58817.26	69.30/0	11610.59279.01	63.20/0	11610.61130.00	66.00/0
11610.56119.01	66.31/0	11610.58817.36	69.30/0	11610.59280.01	63.20/0	11610.61357.00	67.02/1
11610.56138.00	66.11/0	11610.58817.61	69.30/0	11610.59312.01	63.20/0	11610.61421.10	64.00/1
11610.56176.00	61.70/0	11610.58817.73	69.30/0	11610.59313.01	63.20/0	11610.61457.01	63.70/0
11610.56176.00	66.30/0	11610.58817.82	69.30/0	11610.59315.00	63.20/1	11610.61550.30	65.00/0
11610.56177.00	61.70/0	11610.58817.95	69.30/0	11610.59316.00	63.20/1	11610.61551.00	65.00/0
11610.56177.00	66.30/0	11610.58843.00	68.00/1	11610.59317.01	63.20/1	11610.61551.10	65.00/0
11610.56217.00	66.31/0	11610.58844.00	68.00/1	11610.59318.01	63.20/1	11610.61552.00	65.00/0
11610.56263.00	66.31/0	11610.58863.13	68.00/1	11610.59528.01	63.30/0	11610.61553.00	65.00/0
11610.56294.00	66.30/0	11610.58863.14	68.00/1	11610.59530.01	63.20/1	11610.61800.00	65.00/0
11610.56294.01	66.30/0	11610.58863.15	68.00/1	11610.59535.00	63.20/0	11610.61801.00	65.00/0
11610.56297.00	66.11/1	11610.58890.01	69.30/0	11610.59536.00	63.20/0	11610.61802.00	65.00/0
11610.56342.00	66.10/0	11610.58890.26	69.30/0	11610.59548.01	63.20/1	11610.61803.00	65.00/0
11610.56360.00	66.11/1	11610.58890.36	69.30/0	11610.59549.01	63.20/1	11610.61906.00	62.30/0
11610.56391.00	66.11/1	11610.58890.51	69.30/0	11610.59588.00	63.00/0	11610.62006.00	69.00/0
11610.56394.00	66.30/0	11610.58890.73	69.30/0	11610.60004.10	67.02/1	11610.62059.00	69.00/0
11610.56395.00	66.30/0	11610.58890.82	69.30/0	11610.60005.10	67.02/1	11610.62090.00	64.00/1
11610.57766.00	81.00/0	11610.58890.95	69.30/0	11610.60020.00	63.20/0	11610.62124.00	67.30/0
11610.57779.01	81.00/0	11610.58921.30	68.00/0	11610.60021.00	63.20/0	11610.62126.30	67.30/0
11610.59001.01	69.30/0	11610.59001.05	63.00/0	11610.60024.01	67.03/0	11610.62127.30	67.30/0

I N D I C E N U M E R I C O
REPERTOIRE NUMERIQUE
NUMERICAL INDEX
NUMMERISCHES SACHVERZEICHNIS
INDICE NUMERICO

11610.62137.00	69.20/0	11610.63410.00	66.20/0	11610.65078.02/01	44.53/0	11611.50037.00	61.10/0
11610.62138.00	69.20/0	11610.63411.00	66.20/0	11610.65081.00	44.63/0	11611.50042.00	61.10/0
11610.62177.00	69.20/0	11610.64011.01	62.20/0	11610.65081.00/02	44.63/0	11611.50117.00	61.11/0
11610.62213.00	69.20/0	11610.64011.01/02	62.20/0	11610.65081.00/04	44.63/0	11611.52047.00	61.30/0
11610.62270.00	69.20/0	11610.64014.01	62.20/0	11610.65081.01	44.63/0	11611.53009.00	61.11/0
11610.62521.00	69.10/0	11610.64014.01/01	62.20/0	11610.65081.01/02	44.63/0	11611.54028.00	61.60/0
11610.62522.00	69.10/0	11610.64014.01/03	62.20/0	11610.65081.01/04	44.63/0	11611.55078.10	67.02/0
11610.62525.00	69.10/0	11610.64014.01/04	62.20/0	11610.65088.02	44.09/0	11611.55078.20	67.02/0
11610.62528.00	69.10/0	11610.64500.27	62.20/0	11610.65088.03	44.09/0	11611.55079.10	67.02/0
11610.62618.00	69.10/0	11610.64501.26	62.20/0	11610.65088.04	44.09/0	11611.55079.20	67.02/0
11610.62638.01	69.10/0	11610.65011.00	44.53/0	11610.65088.05	44.09/0	11611.58001.01	69.30/0
11610.62639.01	69.10/0	11610.65011.00/01	44.53/0	11610.65088.08	44.09/0	11611.58001.26	69.30/0
11610.62640.00	69.10/0	11610.65011.01	44.53/0	11610.65088.09	44.09/0	11611.58001.38	69.30/0
11610.62641.00	69.10/0	11610.65011.01/01	44.53/0	11610.65088.10	44.09/0	11611.58001.61	69.30/0
11610.62645.00	69.10/0	11610.65011.02	44.53/0	11610.65088.11	44.09/0	11611.58001.73	69.30/0
11610.62646.00	69.10/0	11610.65011.02/01	44.53/0	11610.65111.00	44.09/0	11611.58001.87	69.30/0
11610.62647.00	69.10/0	11610.65012.00	44.63/0	11610.65135.00	46.00/0	11611.58001.95	69.30/0
11610.62677.00	64.00/1	11610.65012.00/02	44.63/0	11610.65135.02	46.00/0	11611.58002.01	69.30/0
11610.62691.00	69.10/0	11610.65012.00/04	44.63/0	11610.65135.06	46.00/0	11611.58002.26	69.30/0
11610.62900.00	69.00/0	11610.65012.01	44.63/0	11610.65135.07	46.00/0	11611.58002.36	69.30/0
11610.62901.00	69.00/0	11610.65012.01/02	44.63/0	11610.65135.12	46.00/0	11611.58002.61	69.30/0
11610.63010.00	62.01/0	11610.65012.01/04	44.63/0	11610.65135.13	46.00/0	11611.58002.73	69.30/0
11610.63010.00	62.10/0	11610.65028.01	43.08/0	11610.65507.04	45.02/0	11611.58002.82	69.30/0
11610.63014.00	62.01/0	11610.65030.01	46.00/0	11610.65503.04	45.08/0	11611.58002.95	69.30/0
11610.63014.00	62.10/0	11610.65035.00	62.30/0	11610.65503.06	45.02/0	11611.58920.30	68.00/0
11610.63019.00	62.01/0	11610.65042.00	46.00/0	11610.65503.06	45.08/0	11611.61550.46	65.00/0
11610.63070.00	02.64/0	11610.65052.03	45.08/0	11610.65504.04	45.02/0	11611.63019.00	62.10/0
11610.63094.00	82.10/0	11610.65061.03	45.07/0	11610.65504.04	45.08/0	11611.63156.00	62.10/0
11610.63095.00	82.10/0	11610.65061.04	45.01/0	11610.65504.06	45.02/0	11611.63315.00	62.10/0
11610.63156.00	62.01/0	11610.65061.14	45.01/0	11610.65504.06	45.08/0	11611.63316.00	62.10/0
11610.63158.01	64.00/0	11610.65065.03	45.07/0	11610.65513.03	45.07/0	11611.63317.00	62.10/0
11610.63159.01	64.00/0	11610.65065.04	45.01/0	11610.65516.03	45.07/0	11611.65061.14	45.01/0
11610.63273.00	62.01/0	11610.65075.02	44.09/0	11610.65519.04	45.02/0	11611.65065.14	45.01/0
11610.63273.00	62.10/0	11610.65075.03	44.09/0	11610.65544.04	45.01/0	11611.65075.00	44.09/0
11610.63274.00	62.01/0	11610.65075.04	44.09/0	11610.65566.04	45.02/0	11611.65089.00	44.09/0
11610.63274.00	62.10/0	11610.65075.05	44.09/0	11610.79010.00	09.00/0	11611.65503.04	45.02/0
11610.63275.00	62.01/0	11610.65075.08	44.09/0	11610.95053.00	67.01/0	11611.65504.04	45.02/0
11610.63275.00	62.10/0	11610.65075.09	44.09/0	11611.08010.00	02.70/0	11611.65504.06	45.02/0
11610.63276.00	62.01/0	11610.65075.10	44.09/0	11611.12091.00	11.10/0	11614.23171.01	32.11/0
11610.63276.00	62.10/0	11610.65075.11	44.09/0	11611.23070.00	32.10/0	11614.53016.10	64.00/0
11610.63315.00	62.01/0	11610.65078.00	44.53/0	11611.23101.00	32.10/0	11614.59339.00	68.00/0
11610.63316.00	62.01/0	11610.65078.00/01	44.53/0	11611.44021.00	21.83/0	11614.65013.00	44.82/0
11610.63317.00	62.01/0	11610.65078.01	44.53/0	11611.49000.00	61.00/0	11614.65013.02	44.82/0
11610.63364.00	82.10/0	11610.65078.01/01	44.53/0	11611.49200.00	61.00/0	11615.52044.00	61.30/0
11610.63404.00	62.20/0	11610.65078.02	44.53/0	11611.50001.00	61.10/0	11615.52055.00	61.30/0

I N D I C E N U M E R I C O

REPERTOIRE NUMERIQUE
NUMERICAL INDEX
NUMMERISCHES SACHVERZEICHNIS
INDICE NUMERICO

L1616.65024.00	46.00/0
L1616.65024.01	46.00/0
L1616.65024.02	46.00/0
L1616.65093.00	46.00/0
L1616.65093.01	46.00/0
L1616.65093.03	46.00/0
L1616.65093.05	46.00/0
L1618.65021.00	46.00/0
L1618.65021.01	46.00/0
L1623.01047.00	01.06/0
L1623.02040.04	01.31/0
L1623.15206.01	01.31/0
L1623.61290.00	63.20/0
L4020.05011.00/01	41.21/0
L4020.05011.00/02	41.21/0
L4020.28043.01	31.20/0
L4020.28044.01	31.20/0
L4020.28045.01	31.20/0
L4100.13122.00	12.00/0

INDICE DI COMPARAZIONE
REPERTOIRE NUMEROS ALFA ROMEO REFERENCES FOURNISSEURS
CROSS REFERENCE
VERGLEICHSINDEX
INDICE DE COMPARACION

N. ORDINAZIONE	N. FORNITORE	FORNITORE
1315.50401 05	LI2347	FISPA
1315.50401 06	LI1175	FISPA
1315.50411 03	LI1885	FISPA
1315.50411 04	LI1886	FISPA
1315.55408	910.720.02	MARELLI ERCOLE
1365.84408	LI2397	FISPA
1365.84801 01	LI1303	FISPA
1365.84801 02	LI1304	FISPA
10106.04010.00/01	41565.009	WEBER EDOARDO
10106.04010.00/04	41535.015	WEBER EDOARDO
10106.04010.00/05	41550.002	WEBER EDOARDO
10106.04010.00/10	41715.001	WEBER EDOARDO
10106.04010.00/11	41640.021	WEBER EDOARDO
10106.04010.00/12	41640.001	WEBER EDOARDO
10106.04010.00/13	47600.005	WEBER EDOARDO
10106.04010.00/14	64240.004.150	WEBER EDOARDO
10106.04010.00/15	41030.005	WEBER EDOARDO
10106.04010.00/16	47600.007	WEBER EDOARDO
10106.04010.00/17	41535.021	WEBER EDOARDO
10106.04010.00/18	41230.001.035	WEBER EDOARDO
10106.04010.00/20	47600.068	WEBER EDOARDO
10106.04147.00	12715.008	WEBER EDOARDO
10106.04148.00	41530.031	WEBER EDOARDO
10106.04149.00	41530.024	WEBER EDOARDO
10121.04010.00/07	41205.101.065	WEBER EDOARDO

N. ORDINAZIONE	N. FORNITORE	FORNITORE
10200.32807.00	LI2403	FISPA
10202.04061.00/04	LI 2400	FISPA
10202.04061.00/05	LI 2356	FISPA
10500.04020.00/01	LI2621	FISPA
10500.04020.00/02	LI2624	FISPA
10500.04020.00/03	LI2625	FISPA
10500.04020.00/04	LI2626	FISPA
10500.04020.00/05	LI2627	FISPA
10500.04020.01	403301	FISPA
10500.05030.00/02	1000301012	BOSCH ROBERT SPA
10500.05030.00/07	1000301009	BOSCH ROBERT SPA
10500.05030.00/08	1000301001	BOSCH ROBERT SPA
10500.05030.00/10	1004652002	BOSCH ROBERT SPA
10500.05030.03/01	1004336006	BOSCH ROBERT SPA
10502.04028.00	10536.035	WEBER EDOARDO
10502.05011.00/02	705.227.02	MARELLI ERCOLE
10502.05011.00/04	910.660.11	MARELLI ERCOLE
10502.05011.00/05	910.211.03	MARELLI ERCOLE
10502.05011.00/09	561.811.13	MARELLI ERCOLE
10512.04010.08/03	52585.005	WEBER EDOARDO
10512.12050.01/04	1407584	BONALDI-BENDITALIA
10512.45050.00	3.3508-5055.3	TEVES ALFRED -A.T.E-
10514.22052.03	13248126043	TEVES ALFRED -A.T.E-
10514.22052.03/05	3810348011	TEVES ALFRED -A.T.E-
10514.22052.03/06	13810248011	TEVES ALFRED -A.T.E-

INDICE DI COMPARAZIONE
REPERTOIRE NUMEROS ALFA ROMEO REFERENCES FOURNISSEURS
CROSS REFERENCE
VERGLEICHSINDEX
INDICE DE COMPARACION

N. ORDINAZIONE	N. FORNITORE	FORNITORE
10514.22052.03/08	13813142012	TEVES ALFRED -A.T.E-
10514.22052.03/09	13810848042	TEVES ALFRED -A.T.E-
10514.22052.03/13	3351842002	TEVES ALFRED -A.T.E-
10514.22052.03/17	3359007001	TEVES ALFRED -A.T.E-
10514.22052.03/25	13046148312	TEVES ALFRED -A.T.E-
10514.22053.03	13248125043	TEVES ALFRED -A.T.E-
10514.26004.02/09	13810842022	TEVES ALFRED -A.T.E-
10536.65028.00	0190601006	BOSCH ROBERT SPA
10536.65170.00	1194485402	BOSCH ROBERT SPA
10541.05030.00/07	1007010003	BOSCH ROBERT SPA
10541.12050.01/07	3351803002	TEVES ALFRED -A.T.E-
10541.22053.00/19	13813340011	TEVES ALFRED -A.T.E-
10548.04010.00/22	47605.027	WEBER EDOARDO
10548.04010.01/01	6426-30	DELLORTO
10548.04010.01/04	6425-30	DELLORTO
10548.04010.01/05	7511-30	DELLORTO
10548.04010.01/06	7542-33	DELLORTO
10548.04010.01/07	3315.70.02	DELLORTO
10548.04010.01/08	7854-61	DELLORTO
10548.04010.01/10	7541-30	DELLORTO
10548.04010.01/12	7509-30	DELLORTO
10548.04010.01/13	7413-61	DELLORTO
10548.04010.01/14	7180.150.33	DELLORTO
10548.04010.01/16	4670-61	DELLORTO
10548.04010.01/17	6173-30	DELLORTO

N. ORDINAZIONE	N. FORNITORE	FORNITORE
10548.04010.01/19	7515-44	DELLORTO
10548.04010.01/20	7626-61	DELLORTO
10548.04010.01/22	7957-61	DELLORTO
10548.04010.01/24	7651-38	DELLORTO
10548.04010.01/25	7663-30	DELLORTO
10548.04010.01/26	7662-30	DELLORTO
10548.04010.01/27	7659-34	DELLORTO
10548.04010.01/28	7540-30	DELLORTO
10548.04010.01/29	2638-61	DELLORTO
10548.04010.04/06	64290.001.060	WEBER EDOARDO
10548.04011.01/01	7660-30	DELLORTO
10548.04017.00	10536.034	WEBER EDOARDO
10548.05011.00/01	1.234.332.074	BOSCH ROBERT SPA
10548.05011.04/01	711.151.03	MARELLI ERCOLE
10548.05011.04/03	711.116.01	MARELLI ERCOLE
10548.05011.04/06	951.411.60	MARELLI ERCOLE
10548.05011.04/11	910.181.03	MARELLI ERCOLE
10548.05011.05	610.145.03	MARELLI ERCOLE
10548.05011.05/09	711.789.10	MARELLI ERCOLE
10548.05011.05/10	711.788.10	MARELLI ERCOLE
10548.05011.06	0.231.129.036	BOSCH ROBERT SPA
10548.05011.06/01	1.235.522.058	BOSCH ROBERT SPA
10548.05521.00	1126610025	BOSCH ROBERT SPA
10548.12050.01/04	3345925191	TEVES ALFRED -A.T.E-
10548.12050.01/11	3341692001	TEVES ALFRED -A.T.E-

INDICE DI COMPARAZIONE
REPERTOIRE NUMEROS ALFA ROMEO REFERENCES FOURNISSEURS
CROSS REFERENCE
VERGLEICHSINDEX
INDICE DE COMPARACION

N. ORDINAZIONE	N. FORNITORE	FORNITORE	N. ORDINAZIONE	N. FORNITORE	FORNITORE
10548.12050.02/03	1405748	BONALDI-BENDITALIA	10548.45020.02/07	14-06292	BONALDI-BENDITALIA
10548.12050.02/08	1418933	BONALDI-BENDITALIA	10548.45020.02/10	14-06294	BONALDI-BENDITALIA
10548.12050.02/11	1418895	BONALDI-BENDITALIA	10548.45020.02/12	14-06018	BONALDI-BENDITALIA
10548.12050.03/13	1405899	BONALDI-BENDITALIA	10548.45020.02/16	14-06293	BONALDI-BENDITALIA
10548.12050.04/04	05167110	BREMBO-BOMBASSEI	10548.45020.02/17	14-06304	BONALDI-BENDITALIA
10548.12050.04/07	05208710	BREMBO-BOMBASSEI	10548.45020.02/30	14-07036	BONALDI-BENDITALIA
10548.12050.04/11	05150210	BREMBO-BOMBASSEI	10548.45020.03/02	3.3316-0040.1	TEVES ALFRED -A.T.E-
10548.26003.01/05	13810338011	TEVES ALFRED -A.T.E-	10548.45020.03/07	3.3319-4200.1	TEVES ALFRED -A.T.E-
10548.32061.00	47105000	TECNOCAR	10548.45020.03/10	3.3390-0052.1	TEVES ALFRED -A.T.E-
10548.32061.00/03	47105710	TECNOCAR	10548.45020.03/30	3.0370-1920.2	TEVES ALFRED -A.T.E-
10548.32061.00/04	47105714	TECNOCAR	10548.45020.03/32	3.3316-0039.1	TEVES ALFRED -A.T.E-
10548.32061.00/05	47106000	TECNOCAR	10548.45020.03/33	3.3317-7500.1	TEVES ALFRED -A.T.E-
10548.32061.01	64	MALPASSI	10548.45020.03/38	3.3390-0088.1	TEVES ALFRED -A.T.E-
10548.32061.01/03	55	MALPASSI	10548.45050.00/05	3350600402	TEVES ALFRED -A.T.E-
10548.32061.01/04	56	MALPASSI	10548.45050.01	14-06632	BONALDI-BENDITALIA
10548.32061.01/05	61	MALPASSI	10548.45050.01/02	1406626	BONALDI-BENDITALIA
10548.32061.01/16	27	MALPASSI	10548.45050.01/04	1406668	BONALDI-BENDITALIA
10548.32061.01/17	29	MALPASSI	10548.45050.01/07	1406271	BONALDI-BENDITALIA
10548.32061.01/18	31	MALPASSI	10548.45050.01/28	1407034	BONALDI-BENDITALIA
10548.32061.01/19	62	MALPASSI	10548.45050.01/29	1407035	BONALDI-BENDITALIA
10548.45020.02	14-06621	BONALDI-BENDITALIA	10549.45020.01/05	14-06617	BONALDI-BENDITALIA
10548.45020.02/02	14-06720	BONALDI-BENDITALIA	10549.45020.01/06	14-06618	BONALDI-BENDITALIA
10548.45020.02/03	14-06288	BONALDI-BENDITALIA	10562.45020.01/12	3.3307-2021.1	TEVES ALFRED -A.T.E-
10548.45020.02/04	14-05690	BONALDI-BENDITALIA	10562.45020.01/18	3.3307-2002.1	TEVES ALFRED -A.T.E-
10548.45020.02/05	14-06286	BONALDI-BENDITALIA	10562.45020.01/36	3.3502-2900.1	TEVES ALFRED -A.T.E-

INDICE DI COMPARAZIONE
REPERTOIRE NUMEROS ALFA ROMEO REFERENCES FOURNISSEURS
CROSS REFERENCE
VERGLEICHSINDEX
INDICE DE COMPARACION

N. ORDINAZIONE	N. FORNITORE	FORNITORE	N. ORDINAZIONE	N. FORNITORE	FORNITORE
10562.45020.01/37	3.3529-4600.1	TEVES ALFRED -A.T.E-	11600.05030.03/17	1003410005	BOSCH ROBERT SPA
10562.45020.01/39	3.3529-3700.1	TEVES ALFRED -A.T.E-	11600.05030.03/18	2000505002	BOSCH ROBERT SPA
10564.12051.04/01	1406284	BONALDI-BENDITALIA	11600.05030.03/19	2000202030	BOSCH ROBERT SPA
10564.12051.04/03	1406783	BONALDI-BENDITALIA	11600.05030.03/20	2001933056	BOSCH ROBERT SPA
10564.12051.04/10	1406497	BONALDI-BENDITALIA	11600.05030.03/21	2003410067	BOSCH ROBERT SPA
10564.12051.04/11	1405939	BONALDI-BENDITALIA	11600.05030.03/23	2910551281	BOSCH ROBERT SPA
10564.12051.04/16	1406517	BONALDI-BENDITALIA	11600.05030.05	0001211025	BOSCH ROBERT SPA
10564.45050.00/02	3350100101	TEVES ALFRED -A.T.E-	11600.05059.00	1126600044	BOSCH ROBERT SPA
10564.45050.00/03	3350600062	TEVES ALFRED -A.T.E-	11600.05061.00/02	1900905203	BOSCH ROBERT SPA
10564.45050.00/08	3350600381	TEVES ALFRED -A.T.E-	11600.05061.00/06	1900905203	BOSCH ROBERT SPA
11600.05030.03/01	2005822060	BOSCH ROBERT SPA	11600.12050.05/09	3340225051	TEVES ALFRED -A.T.E-
11600.05030.03/02	1005852375	BOSCH ROBERT SPA	11600.12050.05/06	3330397001	TEVES ALFRED -A.T.E-
11600.05030.03/03	1003450001	BOSCH ROBERT SPA	11600.12050.05/12	3342500761	TEVES ALFRED -A.T.E-
11600.05030.03/04	2007014038	BOSCH ROBERT SPA	11600.12050.06/06	1406848	BONALDI-BENDITALIA
11600.05030.03/05	0331302064	BOSCH ROBERT SPA	11600.12050.06/14	1406847	BONALDI-BENDITALIA
11600.05030.03/06	1004112510	BOSCH ROBERT SPA	11600.12050.07	131727118	BREMBO-BOMBASSEI
11600.05030.03/07	2004002034	BOSCH ROBERT SPA	11600.12050.07/13	13174610	BREMBO-BOMBASSEI
11600.05030.03/08	2006209163	BOSCH ROBERT SPA	11600.12050.07/14	13172510	BREMBO-BOMBASSEI
11600.05030.03/09	1330516030	BOSCH ROBERT SPA	11600.12050.07/17	05208910	BREMBO-BOMBASSEI
11600.05030.03/10	1330111000	BOSCH ROBERT SPA	11600.12050.13	3252525013	TEVES ALFRED -A.T.E-
11600.05030.03/11	1330111001	BOSCH ROBERT SPA	11600.12051.04	1407078	BONALDI-BENDITALIA
11600.05030.03/12	1000100023	BOSCH ROBERT SPA	11600.12051.04/13	1406865	BONALDI-BENDITALIA
11600.05030.03/13	1000101012	BOSCH ROBERT SPA	11600.12051.04/30	1407255	BONALDI-BENDITALIA
11600.05030.03/15	1000505010	BOSCH ROBERT SPA	11600.12051.04/31	1407137	BONALDI-BENDITALIA
11600.05030.03/16	1001007023	BOSCH ROBERT SPA	11600.23002.21/01	44-30004	BURMAN

INDICE DI COMPARAZIONE
REPERTOIRE NUMEROS ALFA ROMEO REFERENCES FOURNISSEURS
CROSS REFERENCE
VERGLEICHSINDEX
INDICE DE COMPARACION

N. ORDINAZIONE	N. FORNITORE	FORNITORE
11600.23002.21/03	44-30009	BURMAN
11600.23002.21/04	44-30021	BURMAN
11600.23002.21/05	44-30010	BURMAN
11600.23002.21/07	44-30007	BURMAN
11600.23002.21/08	44-30000	BURMAN
11600.23002.21/09	44-30071	BURMAN
11600.23002.21/10	44-30070	BURMAN
11600.23002.21/11	44-30015	BURMAN
11600.23002.21/12	44-30001	BURMAN
11600.23002.21/13	44-30072	BURMAN
11600.23002.21/14	35021	BURMAN
11600.23002.21/15	44-30011	BURMAN
11600.23002.21/16	2005	BURMAN
11600.23002.21/17	16805	BURMAN
11600.23002.21/18	44-30053	BURMAN
11600.23002.21/19	44-30052	BURMAN
11600.23002.21/20	44-30051	BURMAN
11600.23002.21/21	44-30050	BURMAN
11600.23002.21/23	44-30057	BURMAN
11600.23002.21/24	44-30056	BURMAN
11600.23002.21/25	44-30055	BURMAN
11600.23002.21/26	44-30054	BURMAN
11600.23002.21/28	35026	BURMAN
11600.23002.21/29	2579	BURMAN
11600.23002.21/30	16803	BURMAN
11600.23002.21/31	23095	BURMAN
11600.23002.21/32	44-30058	BURMAN
11600.23002.21/33	44-30013	BURMAN
11600.23002.21/34	44-30073	BURMAN
11600.23002.21/35	44-30005	BURMAN
11600.23002.21/36	44-30020	BURMAN
11600.23002.21/37	44-30012	BURMAN
11600.23002.21/38	44-30006	BURMAN
11600.23002.22/01	7820.053.131	ZAHNRADFABRIK Z.F.
11600.23002.22/05	6202 DIN 625	ZAHNRADFABRIK Z.F.
11600.23002.22/06	7820.002.113	ZAHNRADFABRIK Z.F.
11600.23002.22/07	7820052161	ZAHNRADFABRIK Z.F.
11600.23002.22/08	7820040170	ZAHNRADFABRIK Z.F.
11600.23002.22/09	7820037103	ZAHNRADFABRIK Z.F.
11600.23002.22/11	7820023128	ZAHNRADFABRIK Z.F.
11600.23002.22/13	7820040174	ZAHNRADFABRIK Z.F.
11600.23002.22/23	0770.031.971	ZAHNRADFABRIK Z.F.
11600.23002.22/24	0770.031.972	ZAHNRADFABRIK Z.F.
11600.23002.22/25	0770.031.973	ZAHNRADFABRIK Z.F.
11600.23002.22/26	0770.031.974	ZAHNRADFABRIK Z.F.
11600.23002.22/27	0770.032.062	ZAHNRADFABRIK Z.F.
11600.23002.22/28	0770.031.975	ZAHNRADFABRIK Z.F.
11600.23002.22/29	0770.031.812	ZAHNRADFABRIK Z.F.
11600.23002.22/30	0770.031.813	ZAHNRADFABRIK Z.F.
11600.23002.22/31	0770.031.814	ZAHNRADFABRIK Z.F.

INDICE DI COMPARAZIONE
REPERTOIRE NUMEROS ALFA ROMEO REFERENCES FOURNISSEURS
CROSS REFERENCE
VERGLEICHSINDEX
INDICE DE COMPARACION

N. ORDINAZIONE	N. FORNITORE	FORNITORE	N. ORDINAZIONE	N. FORNITORE	FORNITORE
11600.23002.22/32	0770.031.908	ZAHNRADFABRIK Z.F.	11600.65519.03	725921-10	MARELLI ERCOLE
11600.23002.22/33	0770.031.909	ZAHNRADFABRIK Z.F.	11600.65521.03	95210-523	MARELLI ERCOLE
11600.23002.24	7820800163	ZAHNRADFABRIK Z.F.	11600.65521.14	3.390.101.118	BOSCH ROBERT SPA
11600.23002.24/03	0770.060.218	ZAHNRADFABRIK Z.F.	11600.65522.03	95222-187	MARELLI ERCOLE
11600.23002.24/04	7820.040.184	ZAHNRADFABRIK Z.F.	11600.65522.04	1.423.300.034	BOSCH ROBERT SPA
11600.23002.24/10	0659200353	ZAHNRADFABRIK Z.F.	11600.65535.03	90024-8	MARELLI ERCOLE
11600.23002.24/15	0770.032.522	ZAHNRADFABRIK Z.F.	11600.65535.04	2.916.063.007	BOSCH ROBERT SPA
11600.23002.24/16	0770.032.523	ZAHNRADFABRIK Z.F.	11600.65536.03	90003-31	MARELLI ERCOLE
11600.23002.24/17	0770.032.524	ZAHNRADFABRIK Z.F.	11600.65536.04	2.915.011.007	BOSCH ROBERT SPA
11600.23002.24/18	0770.032.525	ZAHNRADFABRIK Z.F.	11600.65544.03	727299-10	MARELLI ERCOLE
11600.23002.24/19	0770.032.526	ZAHNRADFABRIK Z.F.	11602.23002.02	7820800164	ZAHNRADFABRIK Z.F.
11600.23002.24/20	0770.032.527	ZAHNRADFABRIK Z.F.	11602.23002.02/01	7820.053.132	ZAHNRADFABRIK Z.F.
11600.23002.24/21	0770.032.528	ZAHNRADFABRIK Z.F.	11602.23002.02/07	7820052162	ZAHNRADFABRIK Z.F.
11600.23002.24/22	0770.032.529	ZAHNRADFABRIK Z.F.	11603.12051.00/05	1406144	BONALDI-BENDITALIA
11600.26003.01/08	13813138121	TEVES ALFRED -A.T.E-	11603.65513.04	3.390.322.005	BOSCH ROBERT SPA
11600.26003.01/25	13046138182	TEVES ALFRED -A.T.E-	11603.65516.04	3.390.322.004	BOSCH ROBERT SPA
11600.26003.01/31	13810238011	TEVES ALFRED -A.T.E-	11604.65052.14	0.390.346.121	BOSCH ROBERT SPA
11600.26003.04	13238405013	TEVES ALFRED -A.T.E-	11608.04010.00/AD	41565.015	WEBER EDOARDO
11600.26004.04	13238406013	TEVES ALFRED -A.T.E-	11608.04010.00/07	41165.701.055	WEBER EDOARDO
11600.26052.00/13	3351868002	TEVES ALFRED -A.T.E-	11608.04010.00/21	58602.003	WEBER EDOARDO
11600.26052.00/17	3359000441	TEVES ALFRED -A.T.E-	11608.04010.00/23	32376.003	WEBER EDOARDO
11600.45022.03/01	3.6197-0253.1	TEVES ALFRED -A.T.E-	11608.04010.00/24	64700.001	WEBER EDOARDO
11600.65015.02	17.344.999	CARELLO FRAN	11608.04010.00/25	55510.034	WEBER EDOARDO
11600.65015.04	34.99.00.00	SEIMA	11608.04010.00/28	52580.001	WEBER EDOARDO
11600.65015.05	02.271.00	OLSA	11608.04010.00/29	41365.001.210	WEBER EDOARDO

INDICE DI COMPARAZIONE
REPERTOIRE NUMEROS ALFA ROMEO REFERENCES FOURNISSEURS
CROSS REFERENCE
VERGLEICHSINDEX
INDICE DE COMPARACION

N. ORDINAZIONE	N. FORNITORE	FORNITORE
11608.04010.00/30	61450.054	WEBER EDOARDO
11608.04010.00/31	41110.001.135	WEBER EDOARDO
11608.04010.00/42	61565.002	WEBER EDOARDO
11608.04010.00/43	58000.006	WEBER EDOARDO
11608.04010.00/44	10410.003	WEBER EDOARDO
11608.04010.00/55	32374.008	WEBER EDOARDO
11608.04010.00/60	52135.024	WEBER EDOARDO
11608.04010.00/61	64570.009	WEBER EDOARDO
11608.04010.00/62	55510.038	WEBER EDOARDO
11608.04010.00/63	64700.004	WEBER EDOARDO
11608.04010.00/64	32556.018	WEBER EDOARDO
11608.04010.00/65	32556.002	WEBER EDOARDO
11608.04010.00/77	64330.003	WEBER EDOARDO
11608.04010.00/78	12775.004	WEBER EDOARDO
11608.04010.00/79	10140.010	WEBER EDOARDO
11608.04010.00/80	52140.004	WEBER EDOARDO
11608.04010.00/81	64585.005	WEBER EDOARDO
11608.04010.00/84	64750.023	WEBER EDOARDO
11608.04010.00/88	61015.010	WEBER EDOARDO
11608.04010.00/89	61015.008	WEBER EDOARDO
11608.04010.00/90	52210.006	WEBER EDOARDO
11608.04010.00/92	52130.003	WEBER EDOARDO
11608.04010.00/93	52000.001	WEBER EDOARDO
11608.04010.00/94	58300.001	WEBER EDOARDO
11608.04010.00/95	52730.001	WEBER EDOARDO

N. ORDINAZIONE	N. FORNITORE	FORNITORE
11608.04010.00/96	61015.006	WEBER EDOARDO
11608.04010.00/97	37022.002	WEBER EDOARDO
11608.04010.00/99	61002.010	WEBER EDOARDO
11608.04010.05	8858.02	DELLORTO
11608.04010.05/02	7644.55.07	DELLORTO
11608.04010.05/03	9869-32	DELLORTO
11608.04010.05/09	7848.03.63	DELLORTO
11608.04010.05/11	7484.145.02	DELLORTO
11608.04010.05/16	7851.33.02	DELLORTO
11608.04010.05/21	7485.710.01	DELLORTO
11608.04010.05/23	7209-61	DELLORTO
11608.04010.05/30	0500	DELLORTO
11608.04010.05/31	0317	DELLORTO
11608.04010.06	19550.079	WEBER EDOARDO
11608.04010.06/26	31734.086	WEBER EDOARDO
11608.04010.06/27	31734.087	WEBER EDOARDO
11608.04011.05	8858.01	DELLORTO
11608.04011.06	19550.080	WEBER EDOARDO
11608.05030.02	94788	PARIS-RHONE
11608.07021.01/01	3.136.613.033	BOSCH ROBERT SPA
11608.07021.01/02	3.130.149.007	BOSCH ROBERT SPA
11608.65521.04	3.390.101.004	BOSCH ROBERT SPA
11608.65521.14	3.390.121.103	BOSCH ROBERT SPA
11609.12051.00/01	1407727	RONALDI-BENDITALIA
11610.05060.03	0120400848	BOSCH ROBERT SPA

INDICE DI COMPARAZIONE
REPERTOIRE NUMEROS ALFA ROMEO REFERENCES FOURNISSEURS
CROSS REFERENCE
VERGLEICHSINDEX
INDICE DE COMPARACION

N. ORDINAZIONE	N. FORNITORE	FORNITORE	N. ORDINAZIONE	N. FORNITORE	FORNITORE
11610.05061.02/01	711.06103	SEV-MARCHAL-MOTOROLA	11610.05061.03/07	1124652000	BOSCH ROBERT SPA
11610.05061.02/02	719.00003	SEV-MARCHAL-MOTOROLA	11610.05061.03/08	0270100010	BOSCH ROBERT SPA
11610.05061.02/03	719.26703	SEV-MARCHAL-MOTOROLA	11610.05061.03/09	1120551000	BOSCH ROBERT SPA
11610.05061.02/04	719.00103	SEV-MARCHAL-MOTOROLA	11610.05061.03/10	1124034069	BOSCH ROBERT SPA
11610.05061.02/05	719.31003	SEV-MARCHAL-MOTOROLA	11610.05061.03/11	1125824202	BOSCH ROBERT SPA
11610.05061.02/06	719.41403	SEV-MARCHAL-MOTOROLA	11610.05061.03/12	1127011016	BOSCH ROBERT SPA
11610.05061.02/07	719.20403	SEV-MARCHAL-MOTOROLA	11610.05061.03/13	0290800012	BOSCH ROBERT SPA
11610.05061.02/08	719.44603	SEV-MARCHAL-MOTOROLA	11610.05061.03/14	1124336066	BOSCH ROBERT SPA
11610.05061.02/09	719.48003	SEV-MARCHAL-MOTOROLA	11610.05061.03/15	1123410047	BOSCH ROBERT SPA
11610.05061.02/10	711.51203	SEV-MARCHAL-MOTOROLA	11610.05061.03/16	1127011504	BOSCH ROBERT SPA
11610.05061.02/11	719.52003	SEV-MARCHAL-MOTOROLA	11610.05061.03/17	1351355810	BOSCH ROBERT SPA
11610.05061.02/13	719.47303	SEV-MARCHAL-MOTOROLA	11610.05061.03/19	1125715163	BOSCH ROBERT SPA
11610.05061.02/14	719.50503	SEV-MARCHAL-MOTOROLA	11610.05061.03/20	1125715164	BOSCH ROBERT SPA
11610.05061.02/15	719.40703	SEV-MARCHAL-MOTOROLA	11610.05061.03/21	1121099007	BOSCH ROBERT SPA
11610.05061.02/16	719.52103	SEV-MARCHAL-MOTOROLA	11610.05061.03/23	1127014009	BOSCH ROBERT SPA
11610.05061.02/17	712.09903	SEV-MARCHAL-MOTOROLA	11610.05061.03/24	2916639004	BOSCH ROBERT SPA
11610.05061.02/18	712.10003	SEV-MARCHAL-MOTOROLA	11610.05061.03/25	2916011011	BOSCH ROBERT SPA
11610.05061.02/19	712.09303	SEV-MARCHAL-MOTOROLA	11610.05061.03/26	2910021152	BOSCH ROBERT SPA
11610.05061.02/20	715.10113	SEV-MARCHAL-MOTOROLA	11610.05061.03/27	2916063006	BOSCH ROBERT SPA
11610.05061.02/21	715.50113	SEV-MARCHAL-MOTOROLA	11610.05061.03/28	1122390000	BOSCH ROBERT SPA
11610.05061.02/22	718.30903	SEV-MARCHAL-MOTOROLA	11610.05061.03/29	1124304007	BOSCH ROBERT SPA
11610.05061.03/01	1125045011	BOSCH ROBERT SPA	11610.05061.03/30	1125884240	BOSCH ROBERT SPA
11610.05061.03/03	3130558000	BOSCH ROBERT SPA	11610.05061.03/31	1125884238	BOSCH ROBERT SPA
11610.05061.03/04	1127320082	BOSCH ROBERT SPA	11610.45021.00	14-07797	BONALDI-SENDITALIA
11610.05061.03/05	0270000009	BOSCH ROBERT SPA	11610.64011.01	39226401	JAEGER

REPERTOIRE NUMEROS ALFA ROMEO REFERENCES FOURNISSEURS
CROSS REFERENCE
VERGLEICHSINDEX
INDICE DE COMPARACION

N. ORDINAZIONE	N. FORNITORE	FORNITORE	N. ORDINAZIONE	N. FORNITORE	FORNITORE
11610.64011.01/02	39226501	JAEGER	11610.65078.02	11.354.999	CARELLO FRAM
11610.64014.01	39224001	JAEGER	11610.65078.02/01	11.354.717	CARELLO FRAM
11610.64014.01/01	39224101	JAEGER	11610.65081.00	12.353.999	CARELLO FRAM
11610.64014.01/03	39224201	JAEGER	11610.65081.00/02	12.353.719	CARELLO FRAM
11610.64014.01/04	39224301	JAEGER	11610.65081.00/04	12.353.818	CARELLO FR4M
11610.65011.00	11.353.999	CARELLO FRAM	11610.65081.01	206.09.20	ALTISSIMO AIMONE
11610.65011.00/01	11.353.716	CARELLO FRAM	11610.65081.01/02	23.95.23	ALTISSIMO AIMONE
11610.65011.01	188.09.20	ALTISSIMO AIMONE	11610.65081.01/04	22.95.61	ALTISSIMO AIMONE
11610.65011.01/01	20.95.37	ALTISSIMO AIMONE	11610.65088.08	03.222.811	CARELLO FRAM
11610.65011.02	11.355.999	CARELLO FRAM	11610.65088.09	03.220.811	CARELLO FRAM
11610.65011.02/01	11.355.717	CARELLO FRAM	11610.65088.10	03.226.811	CARELLO FRAM
11610.65012.00	12.352.999	CARELLO FRAM	11610.65088.11	03.224.811	CARELLO FRAM
11610.65012.00/02	12.352.719	CARELLO FRAM	11610.65519.04	3.390.150.026	BOSCH ROBERT SPA
11610.65012.00/04	12.352.818	CARELLO FRAM	11610.65544.04	3.390.522.008	BOSCH ROBERT SPA
11610.65012.01	206.09.20	ALTISSIMO AIMONE	11610.65586.04	2.915.011.009	BOSCH ROBERT SPA
11610.65012.01/02	23.95.22	ALTISSIMO AIMONE	11611.65075.00	05.221.811	CARELLO FRAM
11610.65012.01/04	22.95.60	ALTISSIMO AIMONE	11611.65088.00	05.221.911	CARELLO FRAM
11610.65075.08	03.223.811	CARELLO FRAM	11614.65013.00	10.352.999	CARELLO FRAM
11610.65075.09	03.221.811	CARELLO FRAM	14020.05011.00/01	1.237.013.044	BOSCH ROBERT SPA
11610.65075.10	03.227.811	CARELLO FRAM	14020.05011.00/02	1.237.330.116	BOSCH ROBERT SPA
11610.65075.11	03.225.811	CARELLO FRAM			
11610.65078.00	11.352.999	CARELLO FRAM			
11610.65078.00/01	11.352.718	CARELLO FRAM			
11610.65078.01	188.09.20	ALTISSIMO AIMONE			
11610.65078.01/01	20.95.36	ALTISSIMO AIMONE			

Alfa Romeo

Via Gattamelata, 45 - 20149 MILANO

DIASS - Pubblic. N. 4210
4/74 - 4500

Printed in Italy