MASTER INDEX

Fiche #08-W

GROUP	GRID
L BODY EXTERIORS	A-1
M BODY INTERIORS	D-1
PARTS LISTS	E-1
ADDITIONAL	E-12 L
ORDERING PARTS	F-2
USE OF CATALOG	F-3/F-7
ENGLISH	F-6
DAT CODES	F-8
ABBREVIATIONS	F-9
VERSION	F-10
MODIFICATION	F-11
PAINT LIST, U.S.A.	F-2/F-4 LOWER
ACCESSORIES, U.S.A.	F-5 LOWER
ACCESSORIES, CANADA	F-6 LOWER

L BODY EXTERIORS

PLATE NO.	SUBGROUP	GRID
L1.02	INSTRUMENT PANEL & RELEVANT PARTS	A-2
L1.03	FLOOR	A-4
L1.04	CAB INNER ELEMENTS	A-5
L1.05	BODY SHELL OUTER ELEMENTS	A-8
L1.08	HARD TOP	A-9
L1.09	DOORS	A-10

BASIC VERSIONS

26 = REAR WINDOW DEFOG

30 = TINTED GLASS

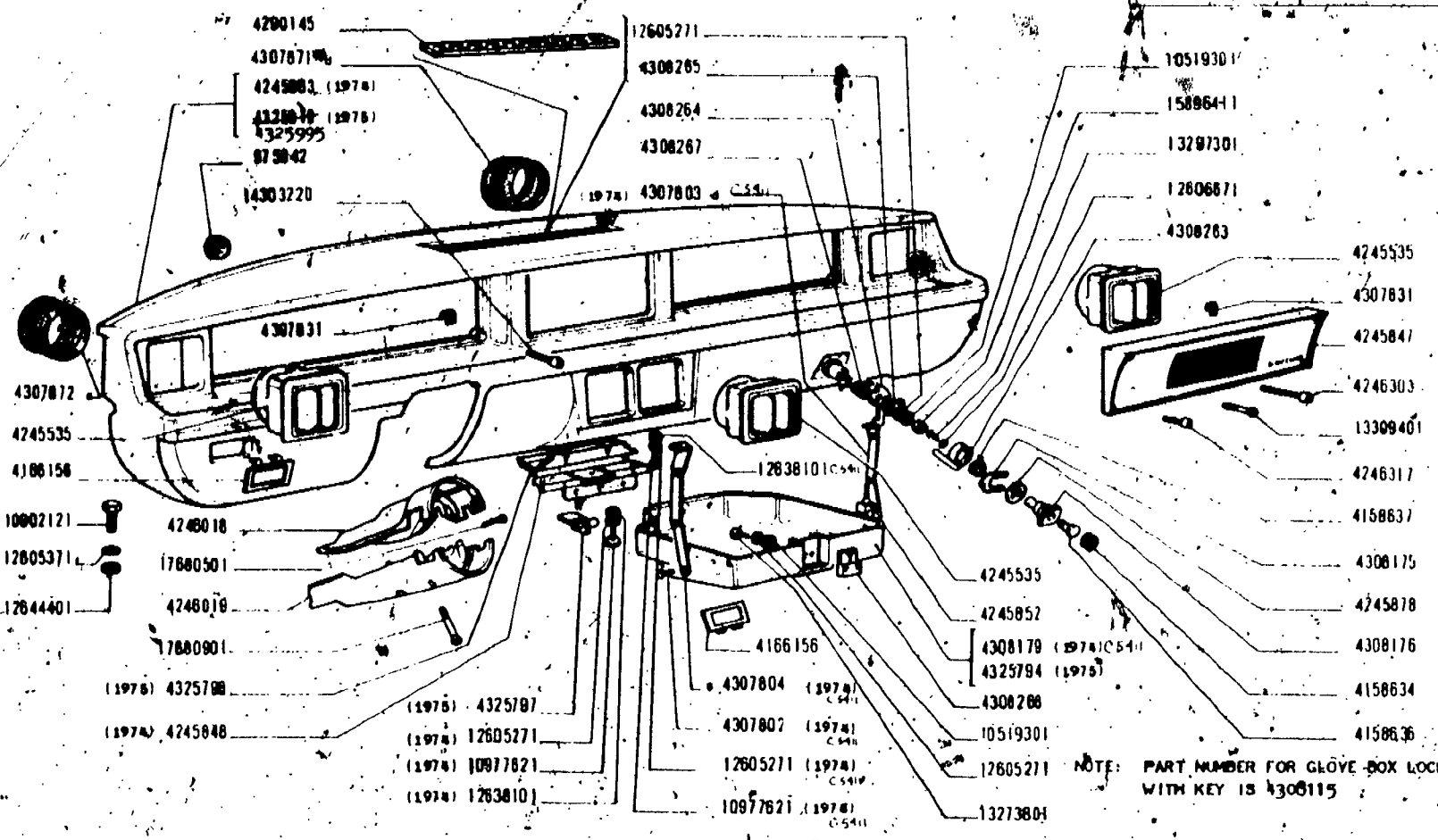

128 N. Am.		PLANCIA-PORTASTRUMENTI E PARTI ANNESSE	L1.02
X 1/9 128 AS	1974 1975	*Planche de bord et annexes* / *Instrumentenbrett und Zubehör* / *Instrument Panel and Relevant Parts* / *Tablero de instrumentos y anexos*	

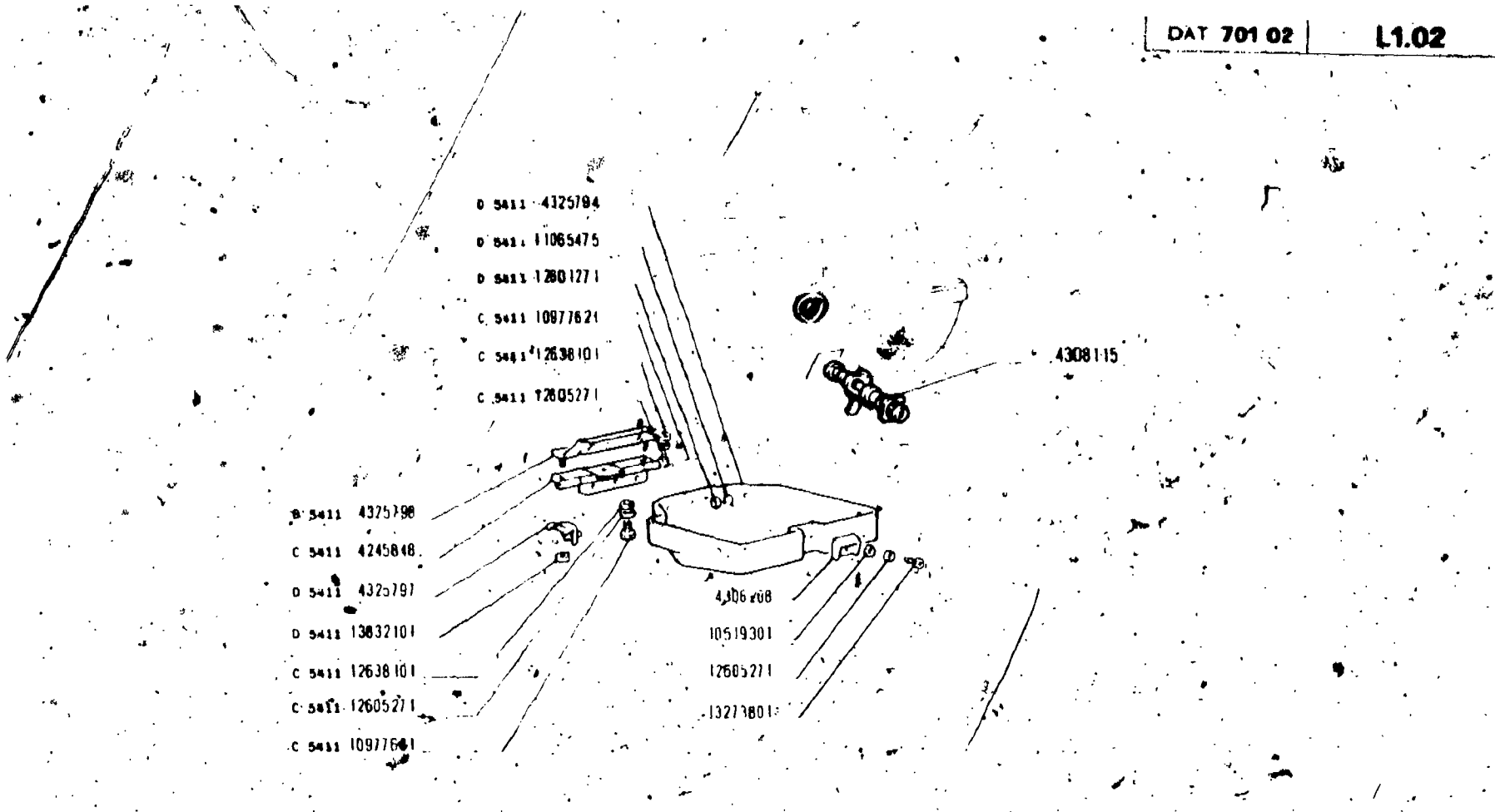

128 N Am

128 X 1/9

1974
1975

Planche de bord
Instrumentenbrett

PLANCIA PORTASTRUMENTI

Instrument Panel
Tablero de instrumentos

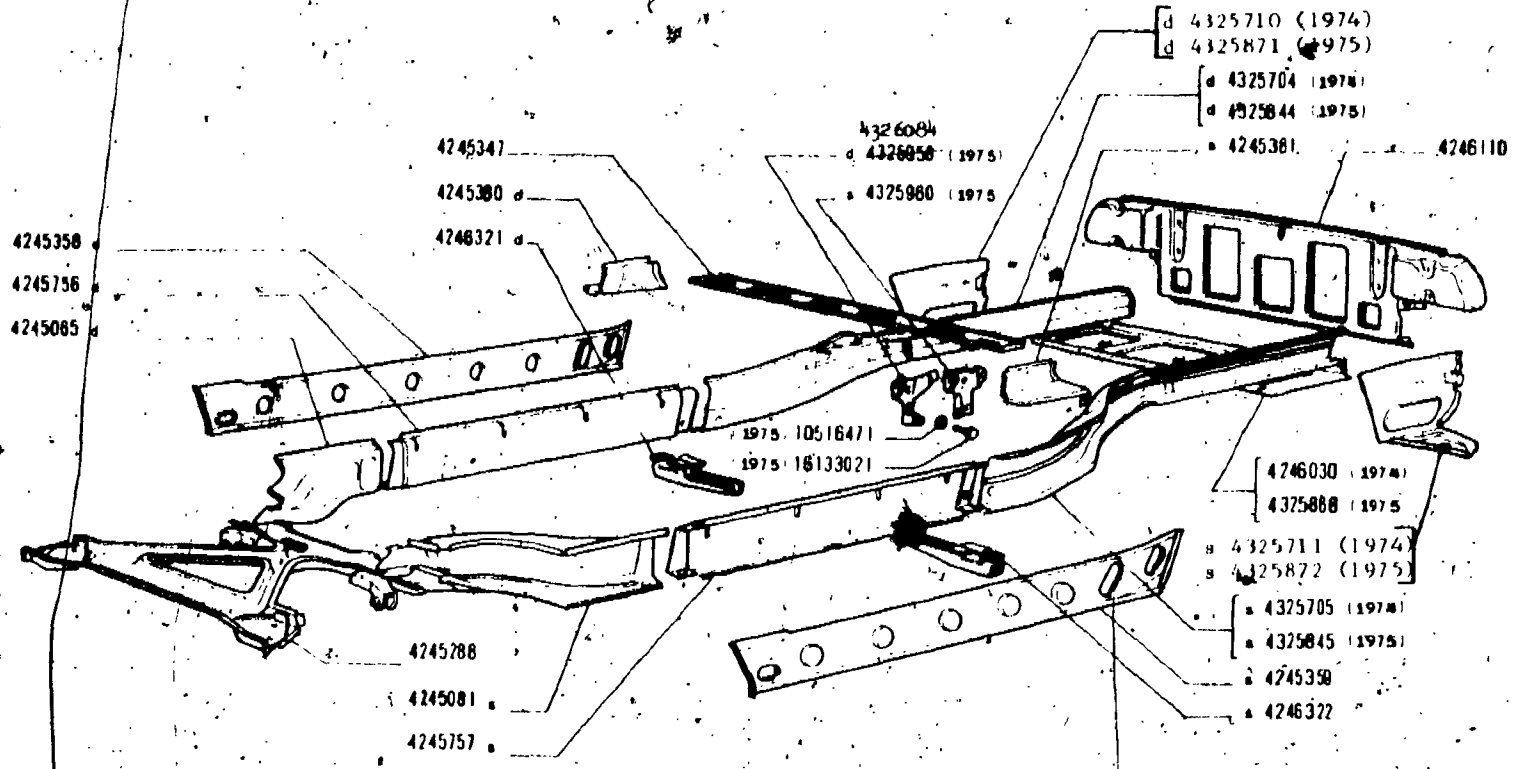
d 4325710 (1974)
d 4325871 (1975)
d 4325704 (1974)
d 4325844 (1975)
4326084
d 4326050 (1975)
s 4325860 (1975)
4245347
4245380 d
4246321 d
4245358
4245756
4245085 d
s 4245381
4246110
1975 10516471
1975 16133021
4246030 (1974)
4325868 (1975)
s 4325711 (1974)
s 4325872 (1975)
s 4325705 (1974)
s 4325845 (1975)
s 4245359
s 4246322
4245788
4245081 s
4245757 s

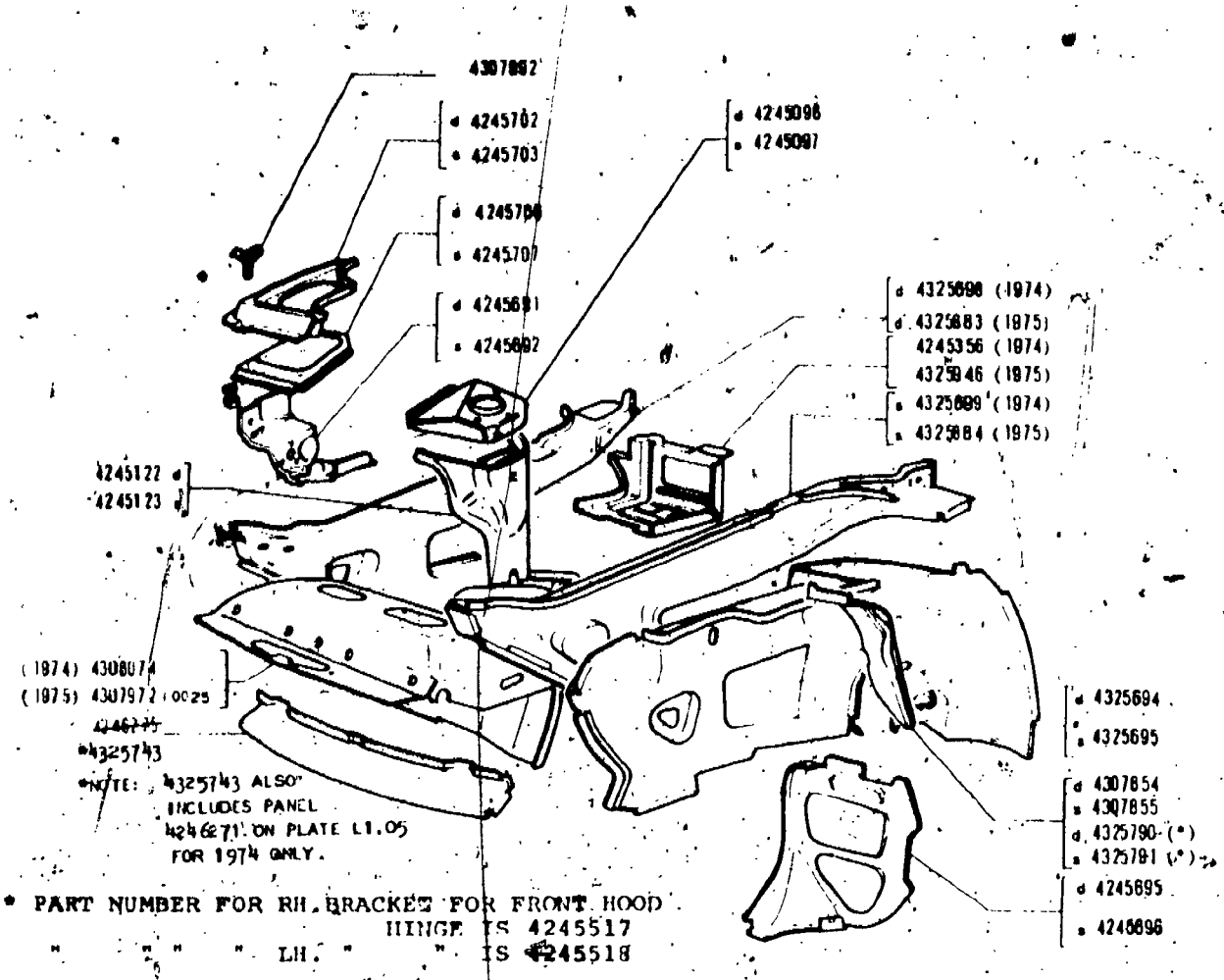

* PART NUMBER FOR RH. BRACKET FOR FRONT HOOD HINGE IS 4245517
" " " " LH. " " IS 4245518

128 N. Am. – X 1/9 **128 AS**	1974 1975	**CABINA, ELEMENTI INTERNI** *Cabine, éléments intérieurs* *Fahrerhaus-Innenteile* *Cab Inner Elements* *Cabina, elementos interiores*	L1.04

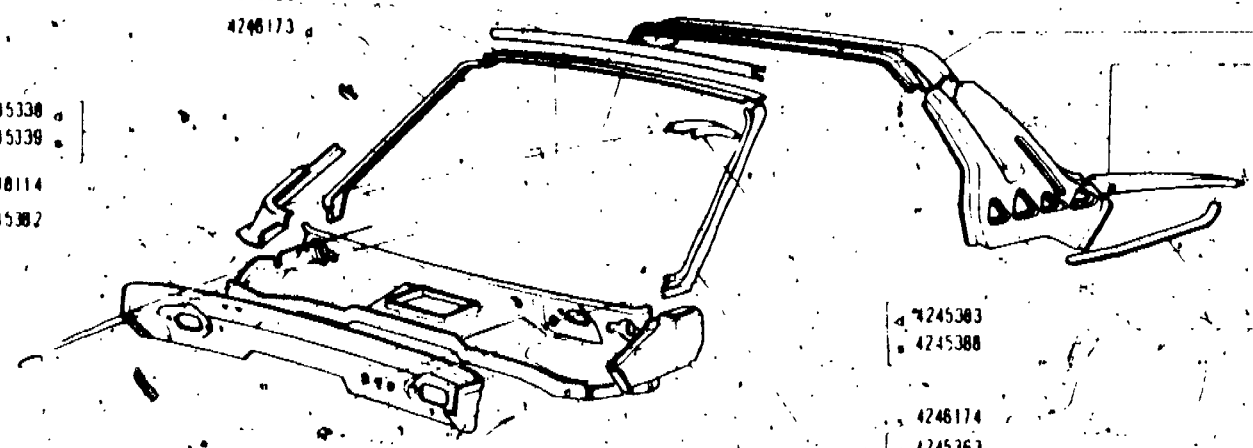

128 N. Am.			
X1/9 **128 AS**	**1974** 1975	**CABINA, ELEMENTI INTERNI** *Cabine, éléments intérieurs* *Fahrerhaus-Innenteile* *Cab. Inner Elements* *Cabina, elementos interiores*	**L1.04.** 2

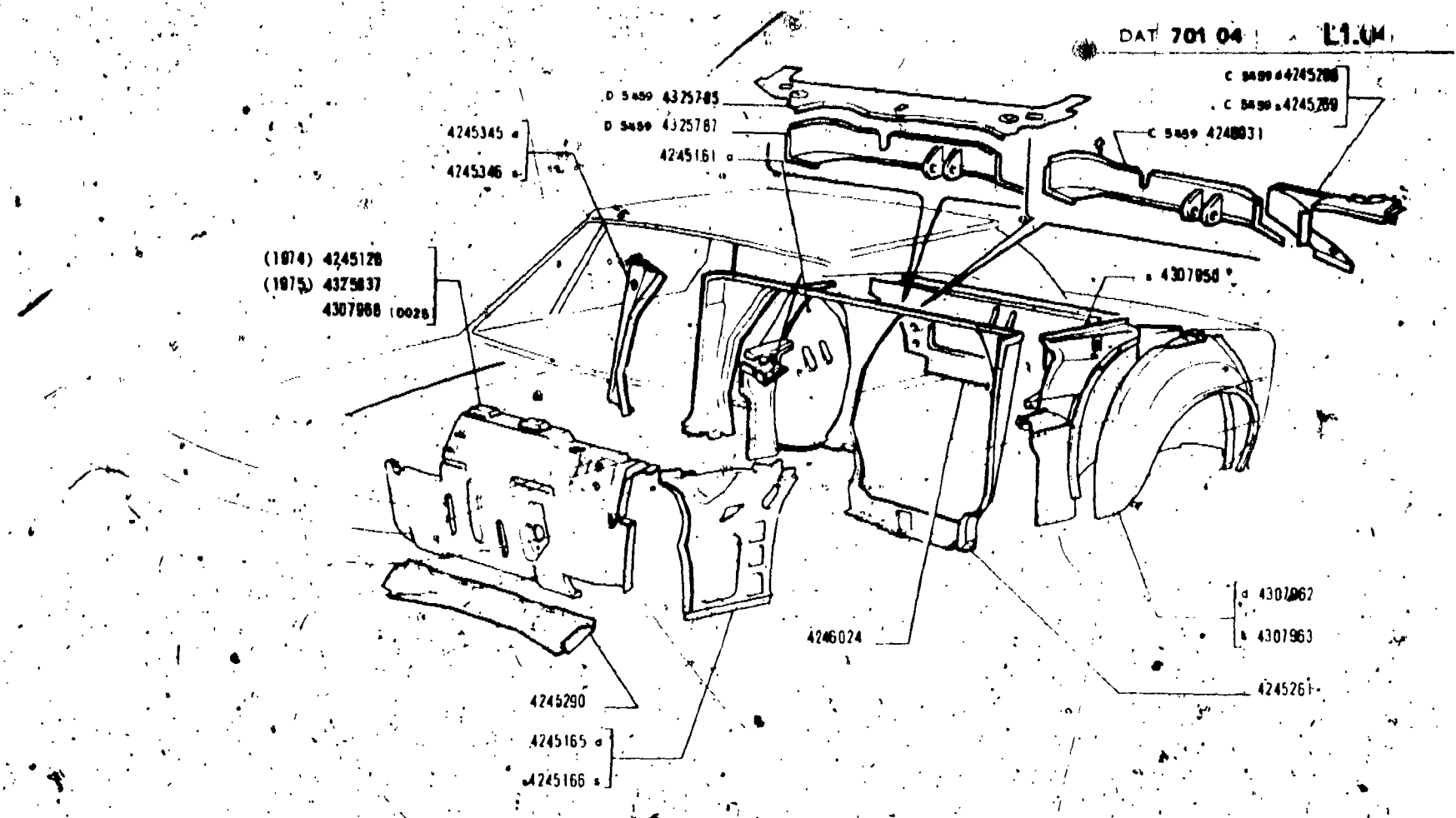

CABINA, ELEMENTI INTERNI

Cabine, éléments intérieurs
Fahrerhaus-Innenteile

Cab Inner Elements
Cabina, elementos interiores

4246345 R/H AND 4246346 L/H ARE THE RUBBER GROMMETS FOR THE BUMPER BRACKET OPENINGS ON THE FRONT PANEL.

4246187 R/H AND L/H IS THE RUBBER GROMMET FOR THE BUMPER BRACKET OPENINGS ON THE REAR PANEL.

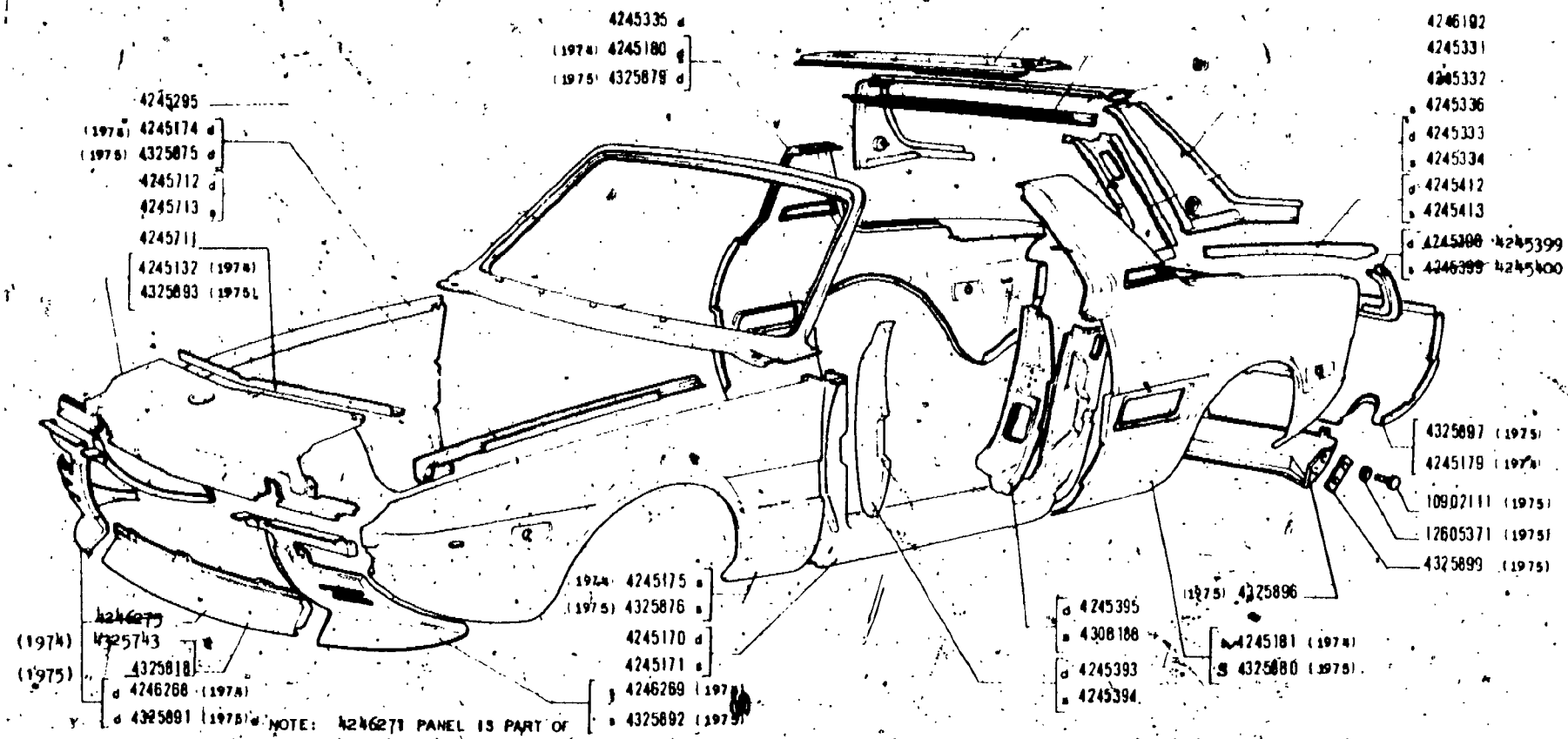

NOTE: 4246271 PANEL IS PART OF 4325743. SEE PLATE L1.04 (1) FOR 1974 ONLY

SCOCCA, ELEMENTI ESTERNI

Coque, éléments extérieurs - Wagenkasten-Aussenteile

Body Shell Outer Elements
Caja, elementos exteriores

NOTE: APPROXIMATE LENGTH ACROSS BACK OF HARD TOP: 1 METER (U.S.A.), 100 C.M. (CANADA).
APPROXIMATE LENGTH EACH SIDE OF HARD TOP: .65 METER (U.S.A.), 65 C.M. (CANADA).

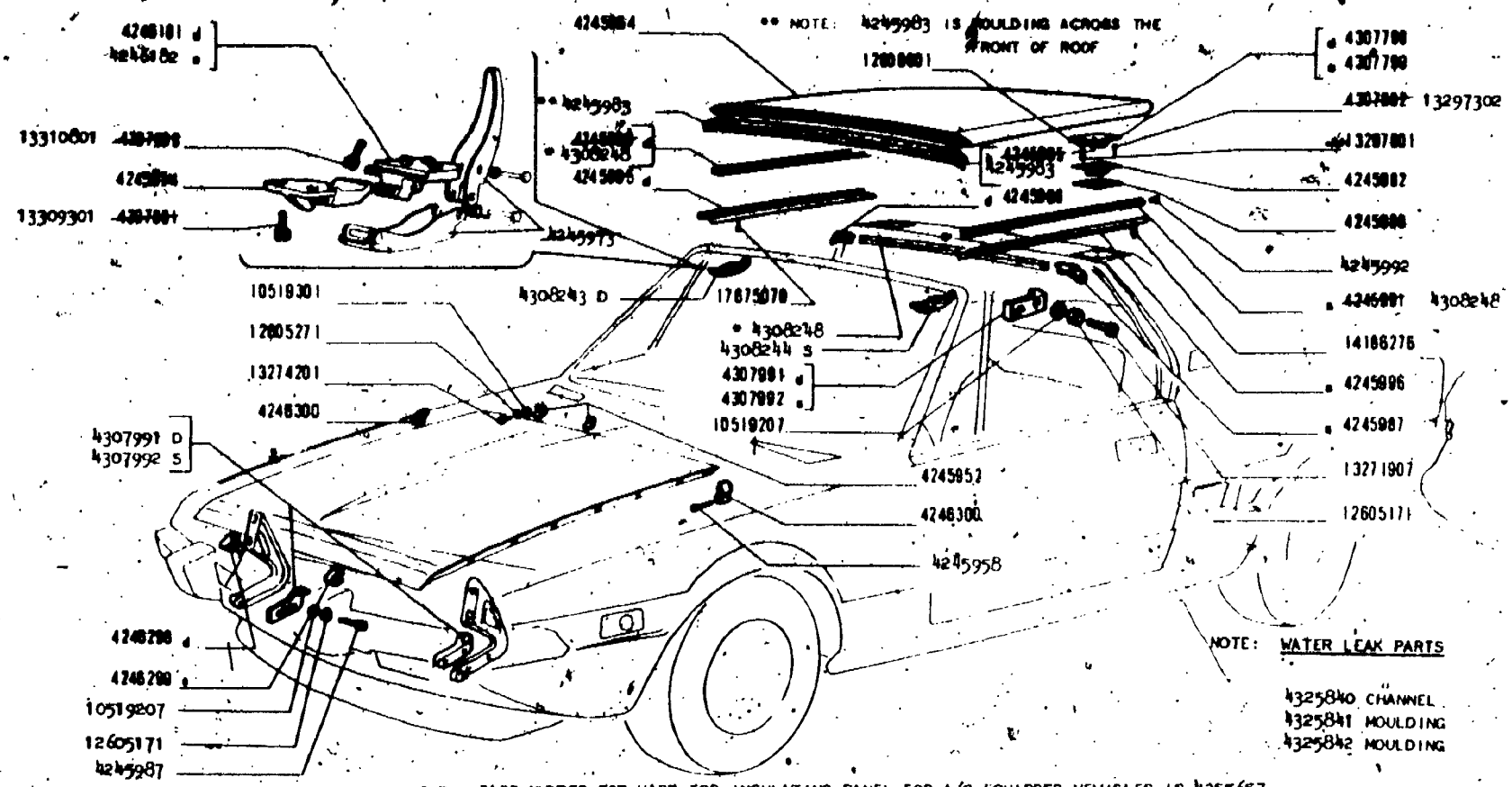

NOTE: PART NUMBER FOR HARD TOP INSULATING PANEL FOR A/C EQUIPPED VEHICLES IS 4355657

128 N. Am.	1974	TETTO RIGIDO		L1.08
X1/9	1975	*Hard-top*	*Hard Top*	
128 AS		*Hard top*	*Techo duro*	

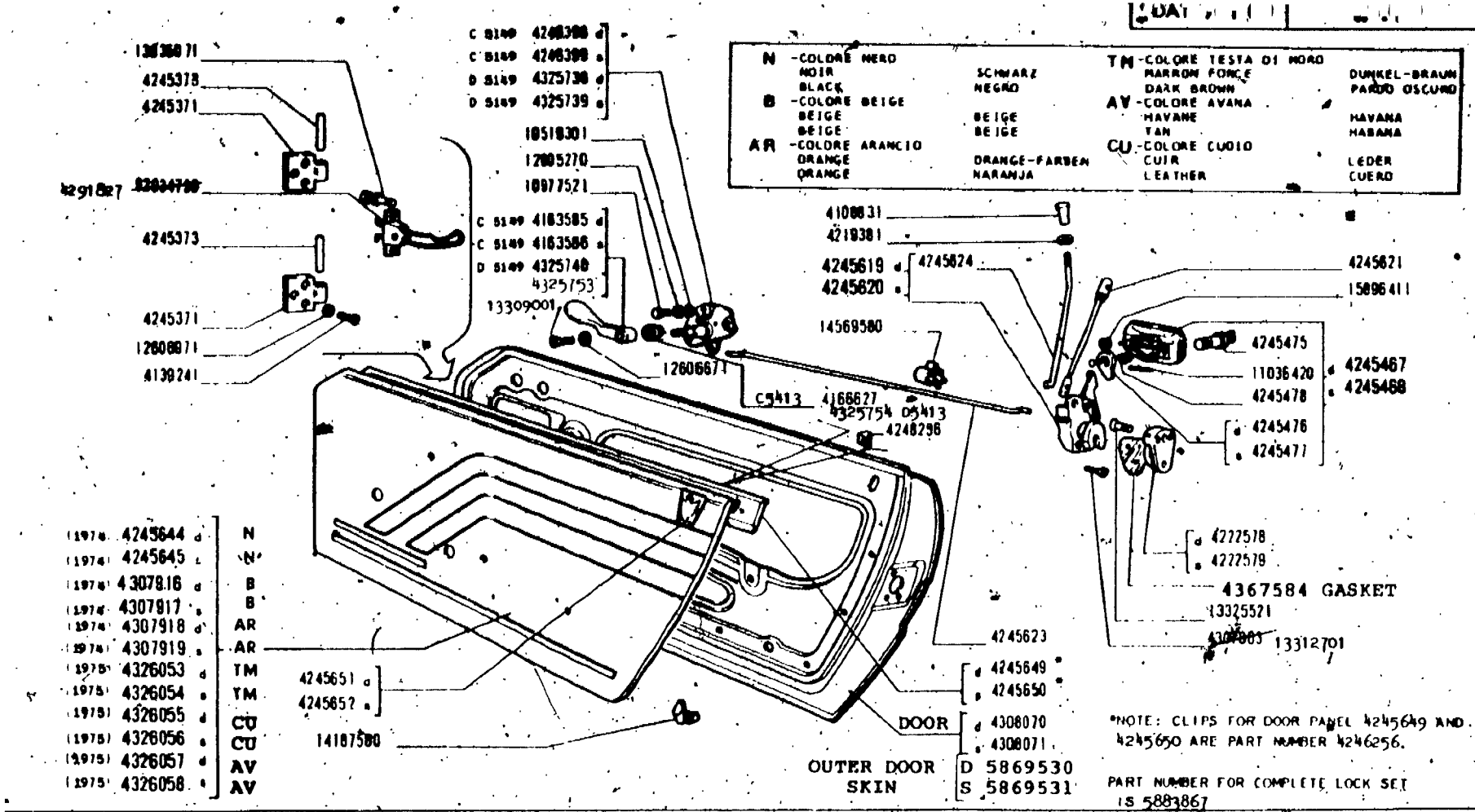

128 N. Am.	1974 1975	PORTE	L1.09
x 1/9 128 AS	Portes Türen	Doors Puertas	

NOTE: 4308248 APPROXIMATE LENGTH AROUND DOOR FRAME: 3 METERS (U.S.A.), 300 C.M. (CANADA)

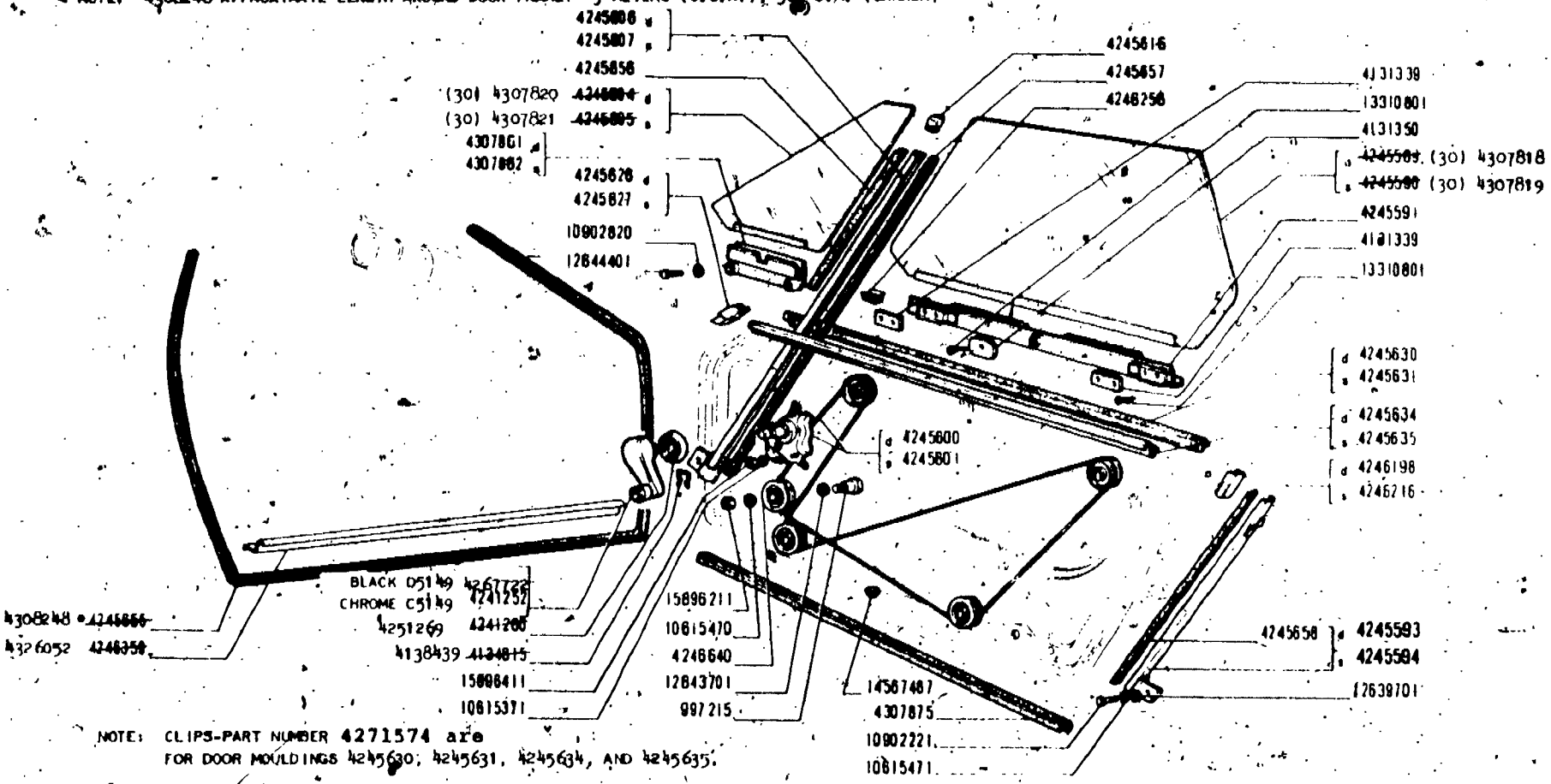

NOTE: CLIPS-PART NUMBER 4271574 are FOR DOOR MOULDINGS 4245630, 4245631, 4245634, AND 4245635.

120 N. Am.	1974	PORTE	L1.09
X1/9	1975	Portes / Türen / Doors / Puertas	2
(30)=TINTED GLASS			

MASTER INDEX

GROUP	GRID
L BODY EXTERIORS	A-1
M BODY INTERIORS	D-1
PARTS LISTS	E-1
ADDITIONAL	F-12 L
ORDERING PARTS	F-2
USEFUL CATALOG	F-3/F-7
ENGLISH	F-6
DATE CODES	F-8
ABBREVIATIONS	F-9
VERSION	F-10
MODIFICATION	F-11
PAINT LIST, U.S.A.	F-2/F-4 LOWER
ACCESSORIES, U.S.A.	F-5 LOWER
ACCESSORIES, CANADA	F-6 LOWER

THIS PAGE
INTENTIONALLY LEFT
BLANK

MASTER INDEX
Fiche 08-W

GROUP	GRID
L BODY EXTERIORS	A-1
M BODY INTERIORS	D-1
PARTS LISTS	E-1
ADDITIONAL	E-12 L
ORDERING PARTS	F-2
USE OF CATALOG	F-3/F-7
ENGLISH	F-6
DAT CODES	F-8
ABBREVIATIONS	F-9
VERSION	F-10
MODIFICATION	F-11
PAINT LIST, U.S.A.	F-2/F-4 LOWER
ACCESSORIES, U.S.A.	F-5 LOWER
ACCESSORIES, CANADA	F-6 LOWER

L BODY EXTERIORS (CONT'D)

PLATE NO.	SUBGROUP	GRID
L1.18	WINDSHIELD	B-2
L1.20	BACK WINDOW	B-3
L1.23	LUGGAGE COMPARTMENT LID	B-4
L1.25	OUTER TRIM MOULDINGS	B-6
L1.27	AIR INTAKES & LIDS	B-8

BASIC VERSION

26=REAR WINDOW DEFOG

30=TINTED GLASS

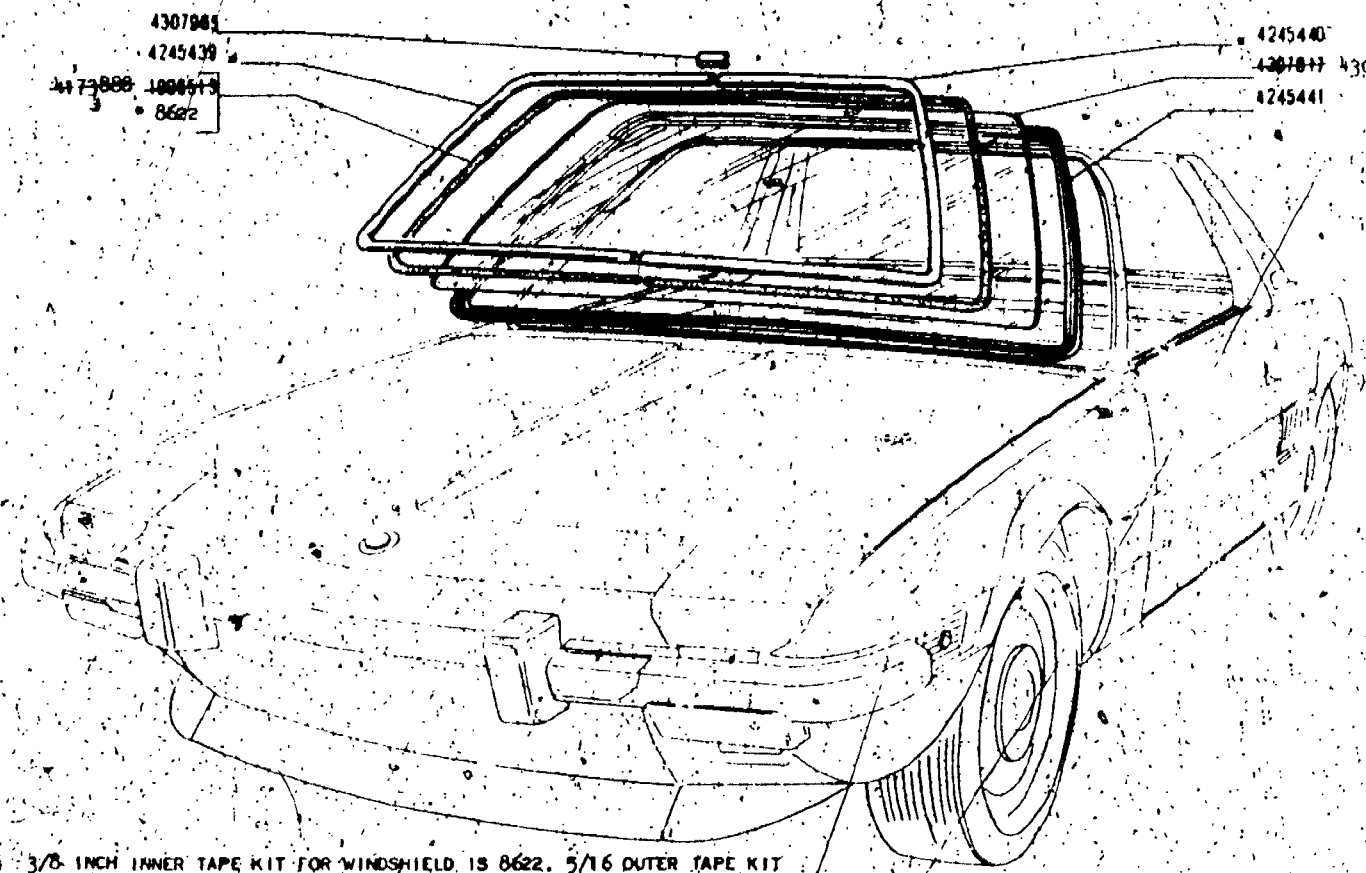

• NOTE: 3/8 INCH INNER TAPE KIT FOR WINDSHIELD IS 8622. 5/16 OUTER TAPE KIT IS 9022. (USA.) CANADIAN DEALERS PURCHASE LOCALLY.

128 N. Am. X1/9 (309=TINTED GLASS	1974 1975	**PARABREZZA** *Pare-brise* *Windschutzscheibe* *Windshield* *Parabrisas*	L1.18

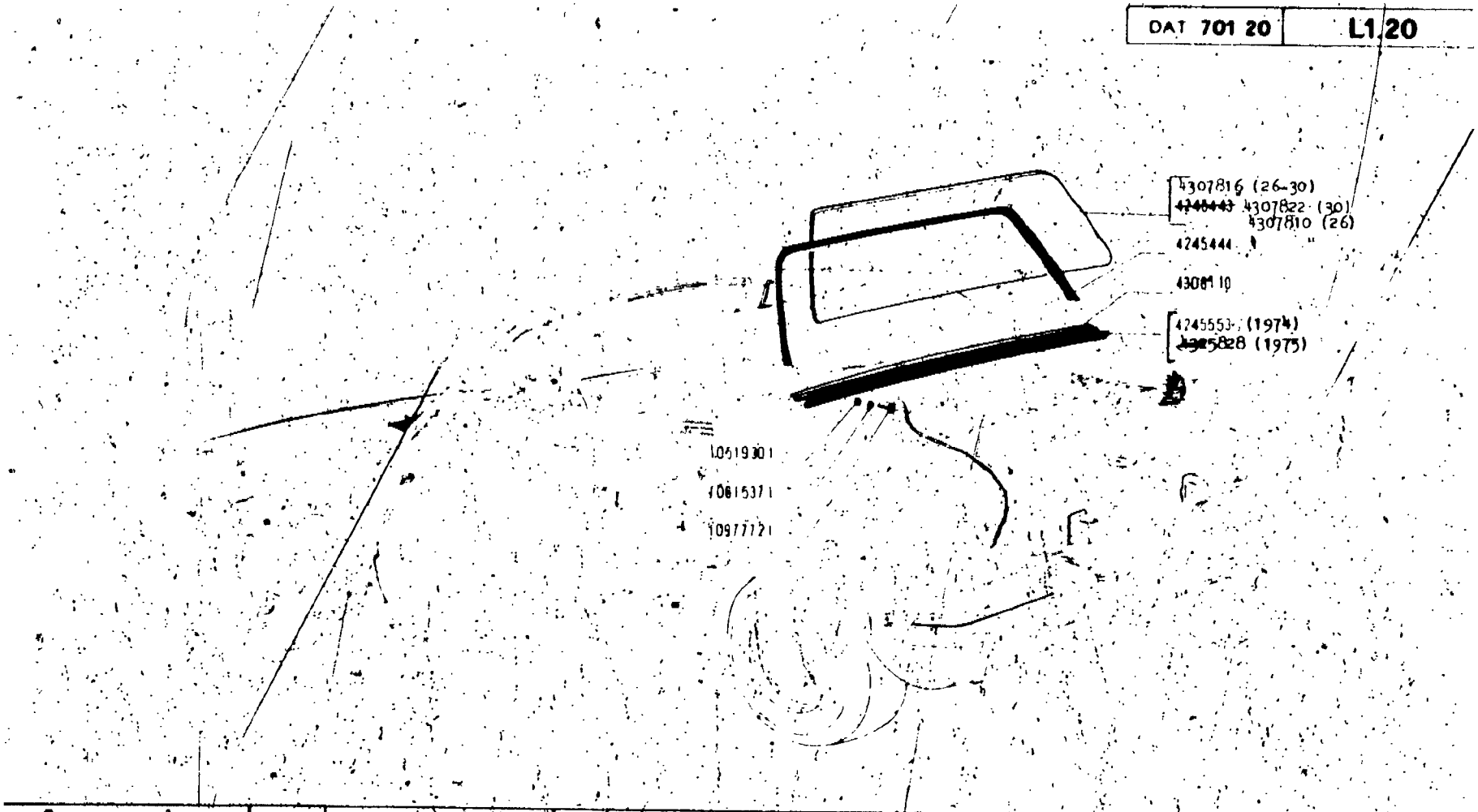

128, N. Am.	1974 1975	**FINESTRA POSTERIORE**	L1.20
X1/9		*Lunette AR*	
(26)=REARWINDOW DEFOG		*Rückwandfenster*	
(30)=TINTED GLASS		*Back Window*	
		Ventana trasera	

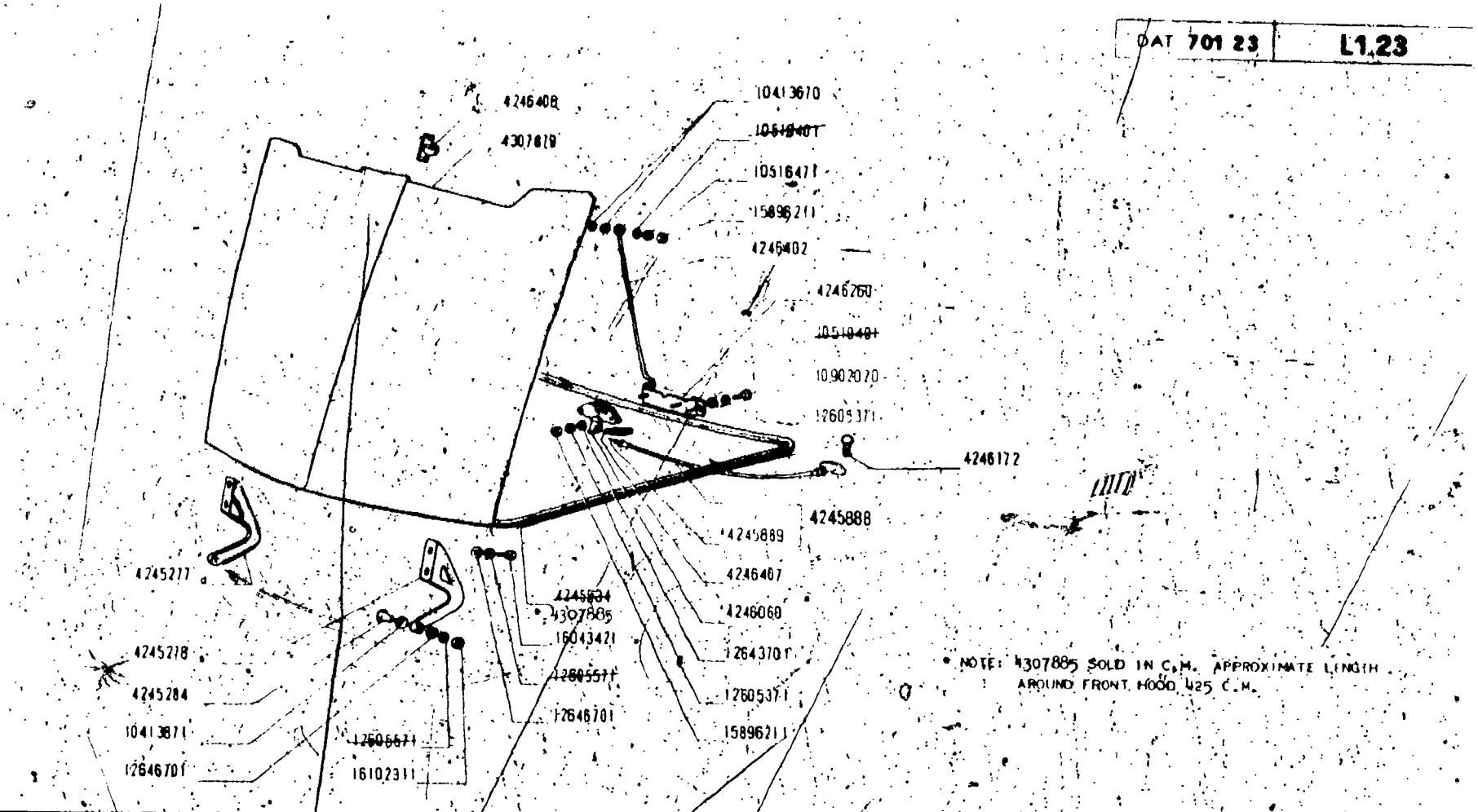

128 N. An.
X1/9
128 AS

1974
1975

COPERCHIO VANO BAGAGLI

Couvercle de coffre
Kofferraumdeckel

Luggage Compartment Lid
Tapa del baúl

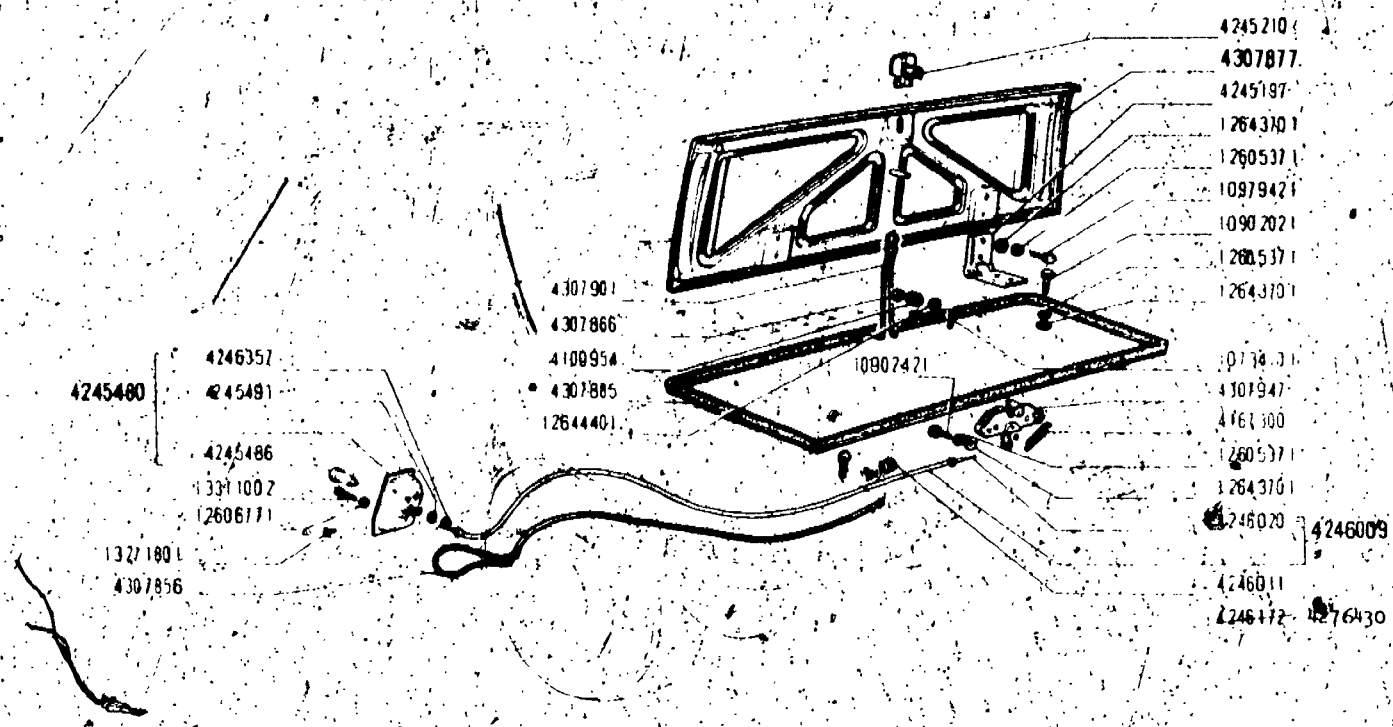

* NOTE: 4307885 SOLD: IN C.M. APPROXIMATE LENGTH AROUND REAR LID 325 C.M.

COPERCHIO VANO BAGAGLI

Couvercle de coffre
Kofferraumdeckel
Luggage Compartment Lid
Tapa del baúl

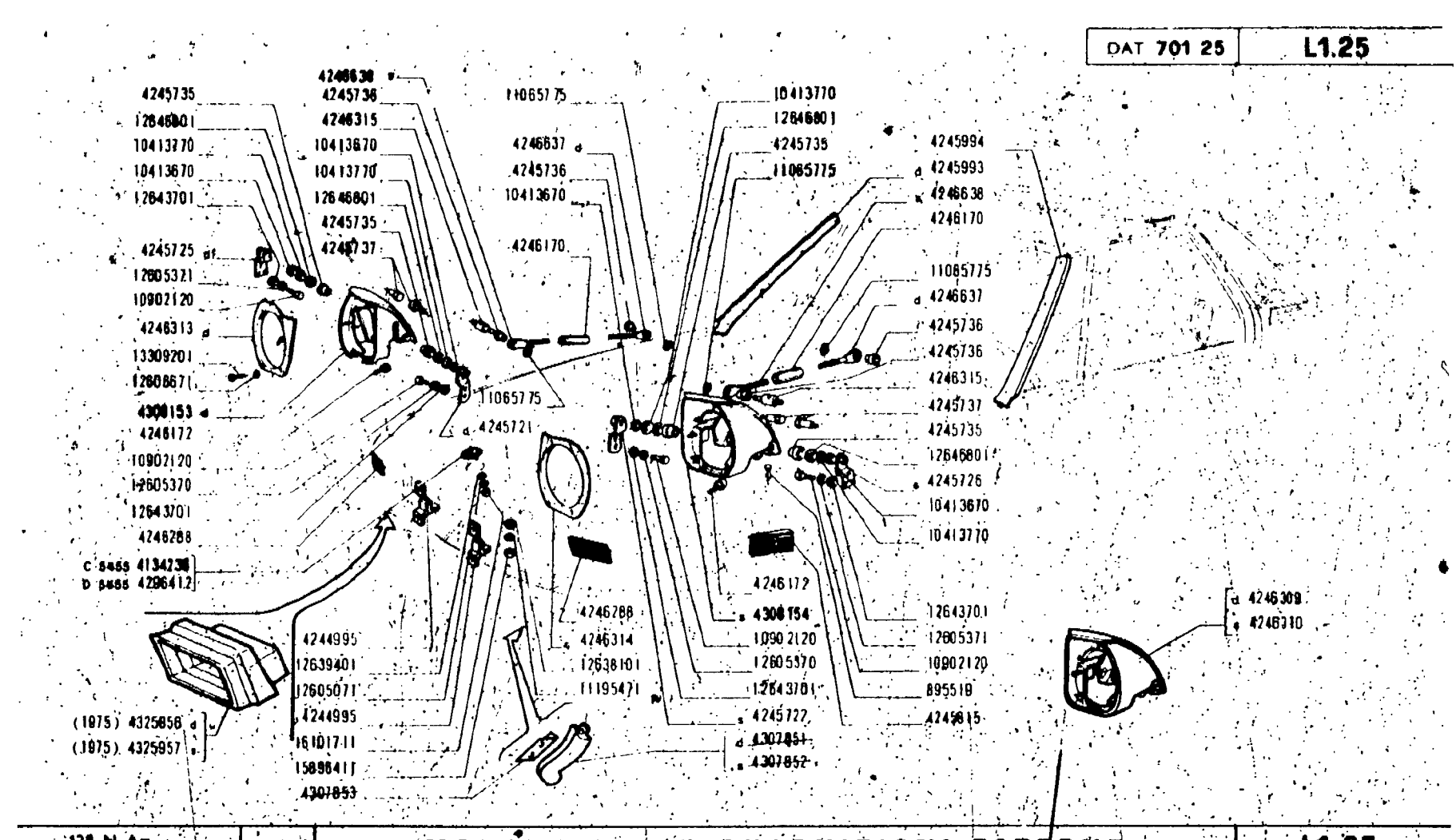

MODANATURE E GUARNIZIONI ESTERNE

Moulures et garnitures extérieures
Äussere Verzierungen
Outer Trim Mouldings
Molduras exteriores

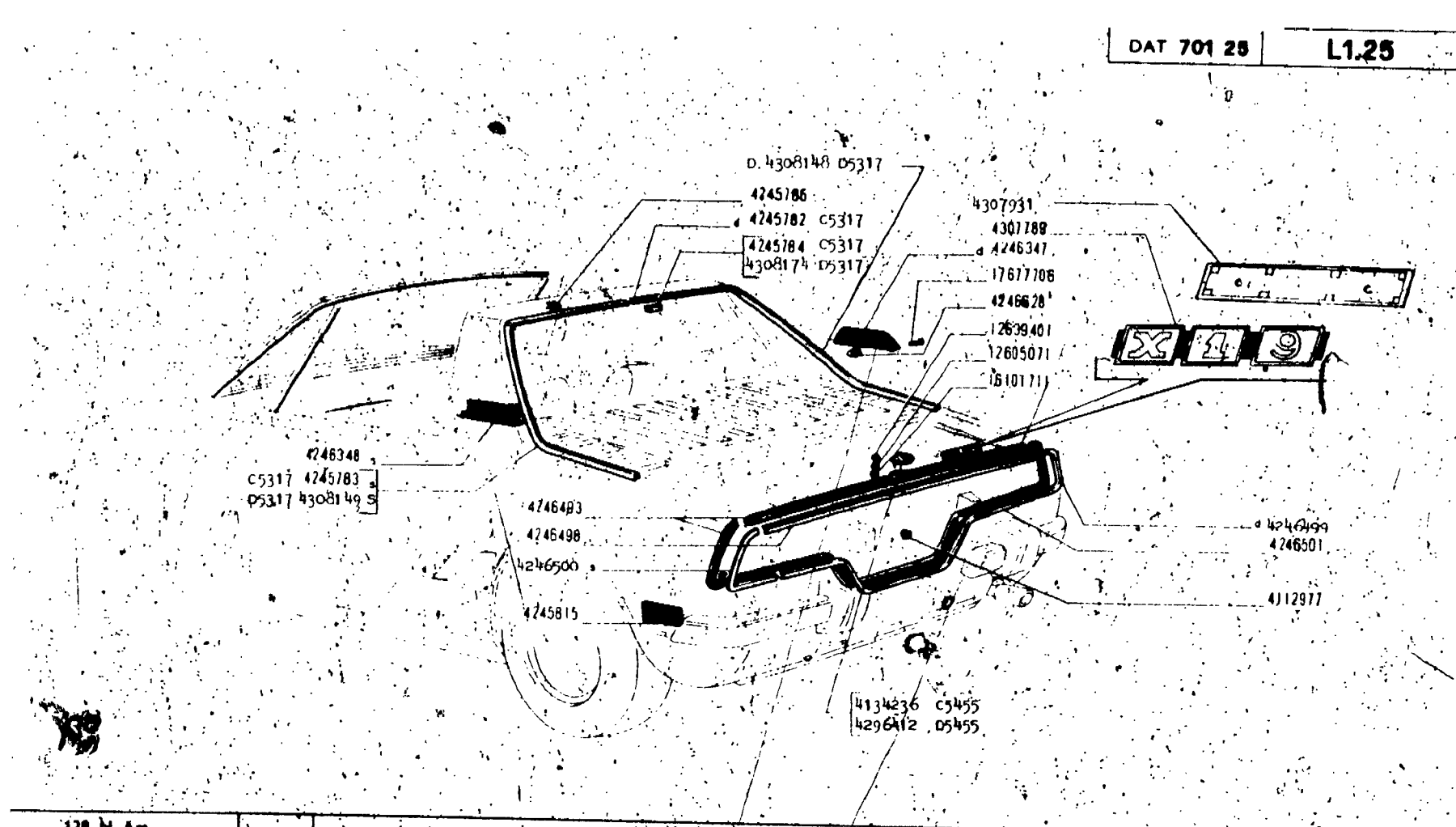

128 N. Am.			
X1/9	1974	**MODANATURE E GUARNIZIONI ESTERNE**	L1.25
128 AS	1975	*Moulures et garnitures extérieures* / *Äussere Verzierungen* / *Outer Trim Mouldings* / *Molduras exteriores*	2

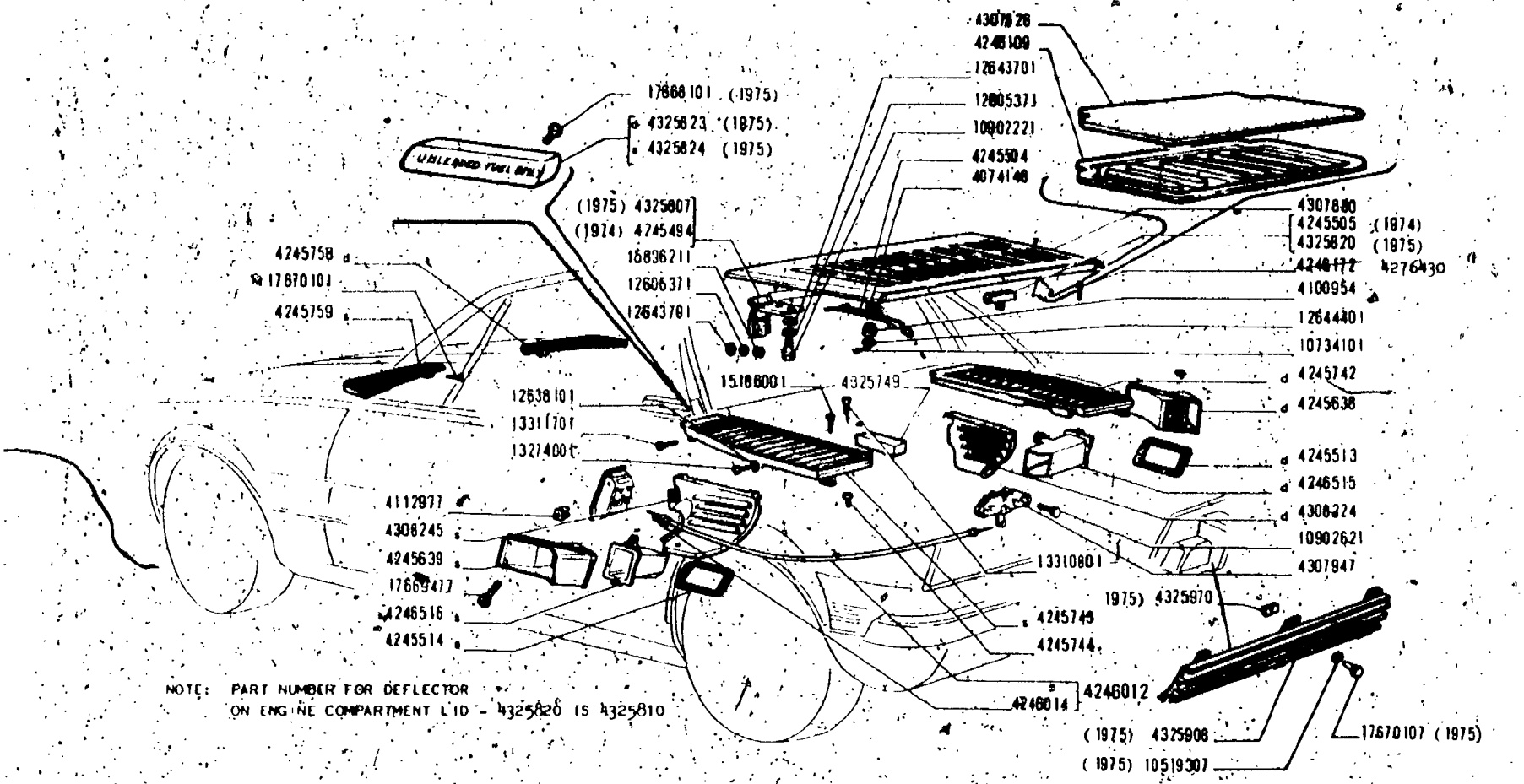

NOTE: PART NUMBER FOR DEFLECTOR ON ENGINE COMPARTMENT LID - 4325820 IS 4325810

PRESE ARIA E SPORTELLI VARI

Prises d'air et volets divers
Luftleitung und Frischluftklappen
Air intakes and Lids
Boca de aire y ventanillos varios

MASTER INDEX

GROUP	GRID
"L BODY EXTERIORS	A-1
M BODY INTERIORS	D-1
PARTS LISTS	E-1
ADDITIONAL	E-12.1
ORDERING PARTS	F-2
USE OF CATALOG	F-3/F-7
ENGLISH	F-6
DAT CODES	F-8
ABBREVIATIONS	F-9
VERSION	F-10
MODIFICATION	F-11
PAINT LIST, U.S.A.	F-2/F-4 LOWER
ACCESSORIES, U.S.A.	F-5 LOWER
ACCESSORIES, CANADA	F-6 LOWER

THIS PAGE
INTENTIONALLY LEFT
BLANK

MASTER INDEX

Fiche # 084

GROUP	GRID
L BODY EXTERIORS	A-1
M BODY INTERIORS	D-1
PARTS LISTS	E-1
ADDITIONAL	E-12 L
ORDERING PARTS	F-2
USE OF CATALOG	F-3/F-1
ENGLISH	F-6
DAT CODES	F-8
ABBREVIATIONS	F-9
VERSION	F-10
MODIFICATION	F-11
PAINT LIST, U.S.A.	F-2/F-4 LOWER
ACCESSORIES, U.S.A.	F-5 LOWER
ACCESSORIES, CANADA	F-6 LOWER

L BODY EXTERIORS (cont'd)

PLATE NO.	SUBGROUP	GRID
L3.01	RADIATOR GRILLE	C-2
L3.02	PROTECTION LIPS	C-3
L3.06	FRONT BUMPER	C-4
L3.06/1	FRONT BUMPER	C-5
L3.07	REAR BUMPER	C-6
L3.07/1	REAR BUMPER	C-7

BASIC VERSION

26 - REAR WINDOW DEFOG

30 - TINTED GLASS

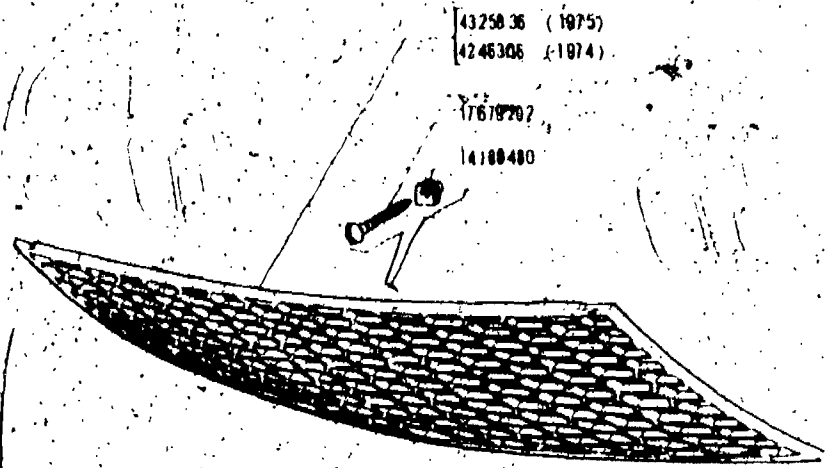

128 N. Am.	1974	GRIGLIA RADIATORE		L3.01
X 1/9	1975	Grille de radiateur	Radiator Grille	
1° A		Kühlergitter	Coraza de radiador	

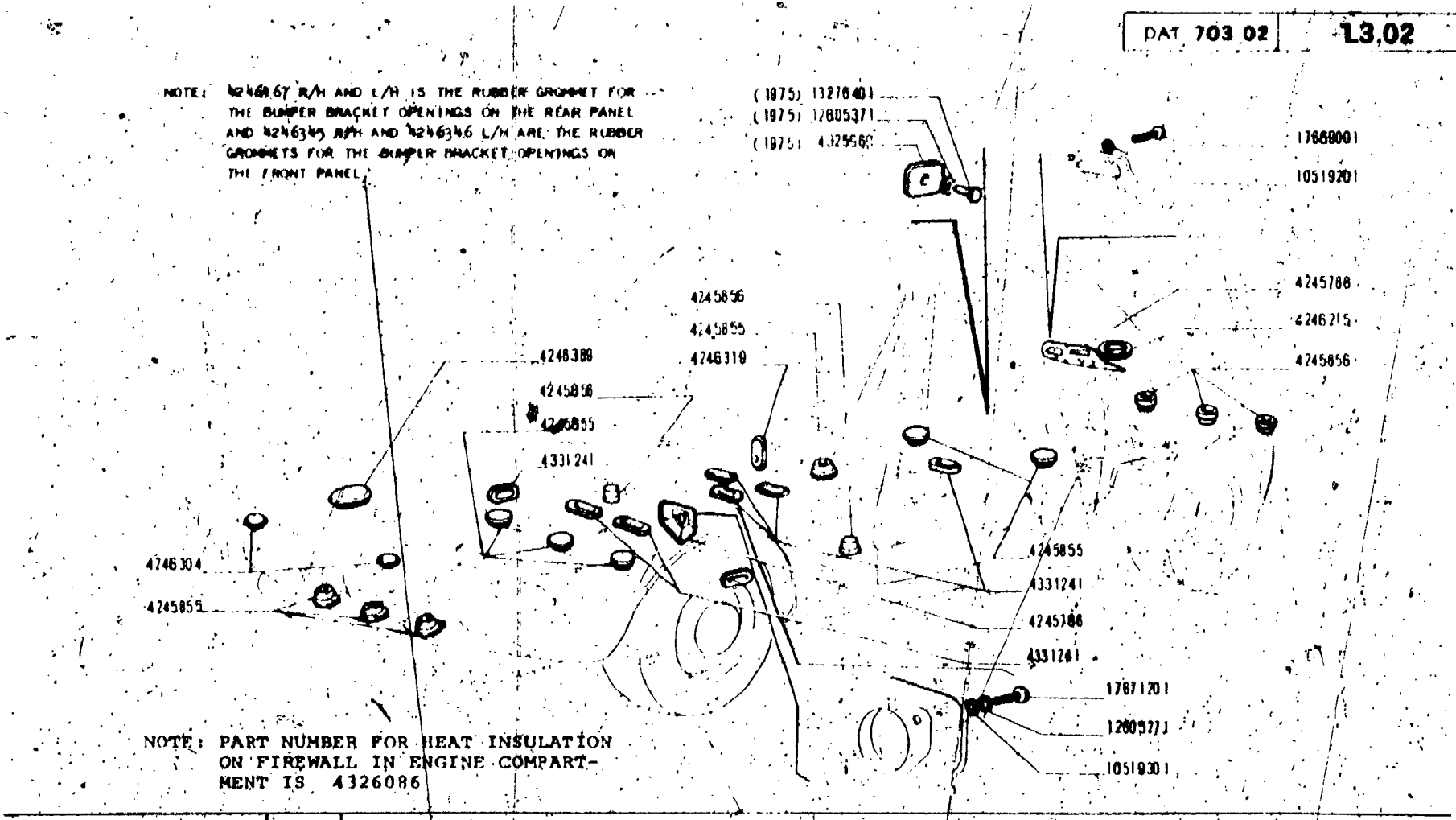
NOTE: 4246167 R/H AND L/H IS THE RUBBER GROMMET FOR THE BUMPER BRACKET OPENINGS ON THE REAR PANEL AND 4246345 R/H AND 4246346 L/H ARE THE RUBBER GROMMETS FOR THE BUMPER BRACKET OPENINGS ON THE FRONT PANEL.
(1975) 1327640
(1975) 12605371
(1975) 4325560
17669001
10519201
4245788
4246215
4245856
4245856
4245855
4246319
4246389
4245856
4245855
4331241
4246304
4245855
4245855
4331241
4245788
4331241
17671201
12605271
10519301
NOTE: PART NUMBER FOR HEAT INSULATION ON FIREWALL IN ENGINE COMPARTMENT IS 4326086

[illegible] R/H AND [illegible] L/H ARE THE PART NUMBERS FOR THE GROMMETS FOR BUMPER BRACKET OPENINGS ON THE FRONT PANEL.

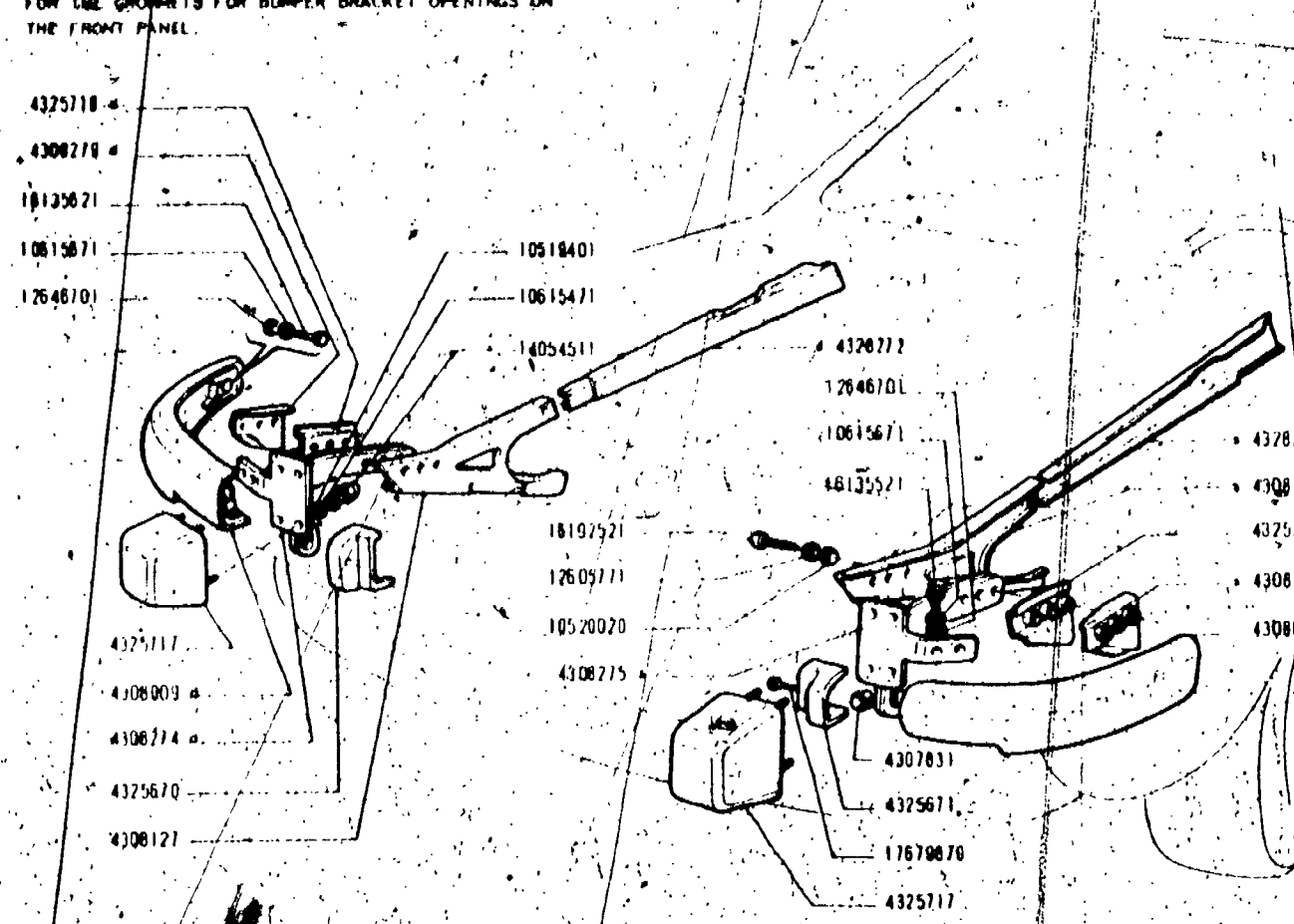

128 N. Am.

X1/9

128 AS

PARAURTI ANTERIORE

Pare-chocs AV
Vorderer Stossfänger

Front Bumper
Parachoques anterior

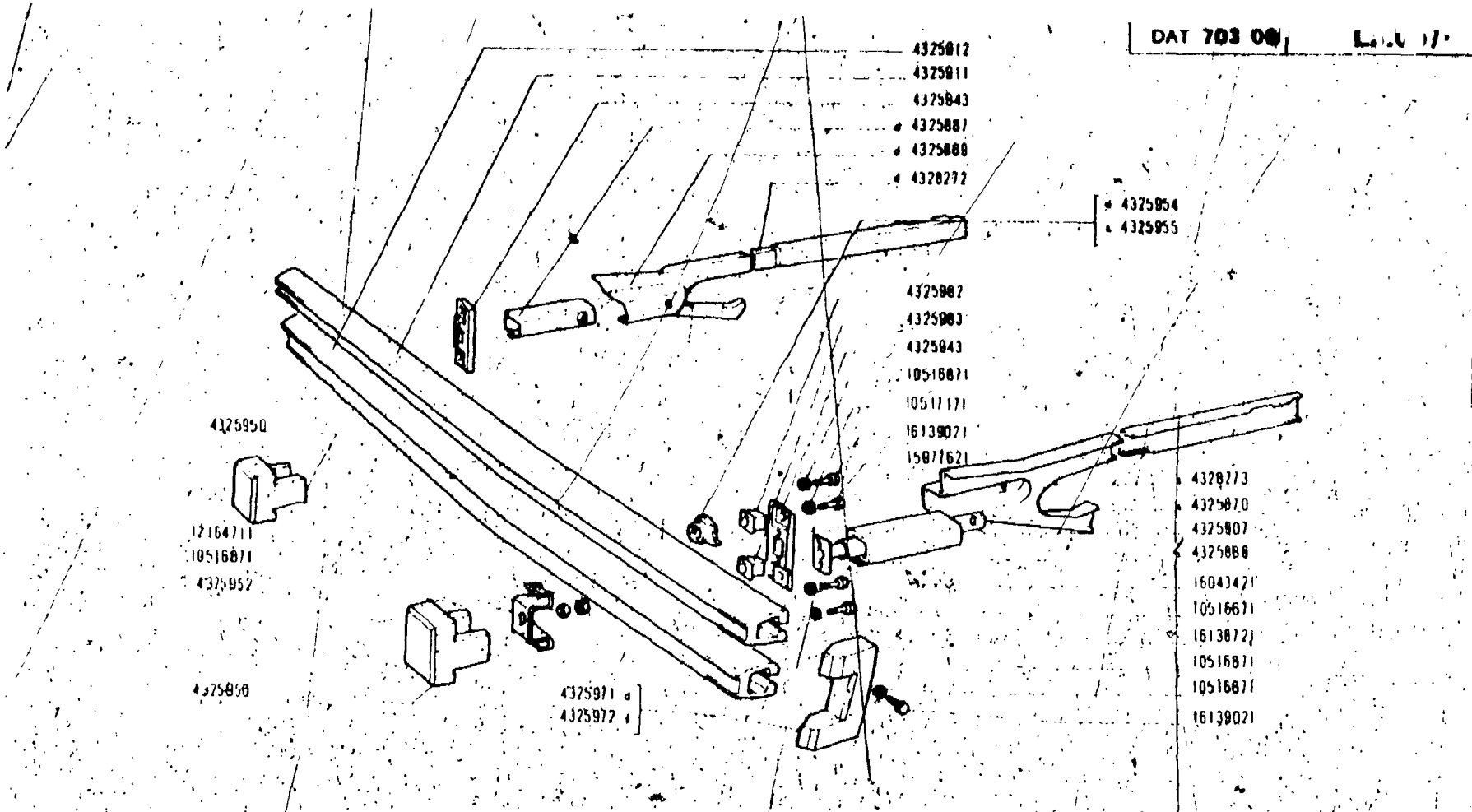

128 N. Am.

x 1/9

128 AS

1975

Pare-chocs AV
Vorderer Stossfänger

PARAURTI ANTERIORE

Front Bumper
Parachoques anterior

L3.06/1

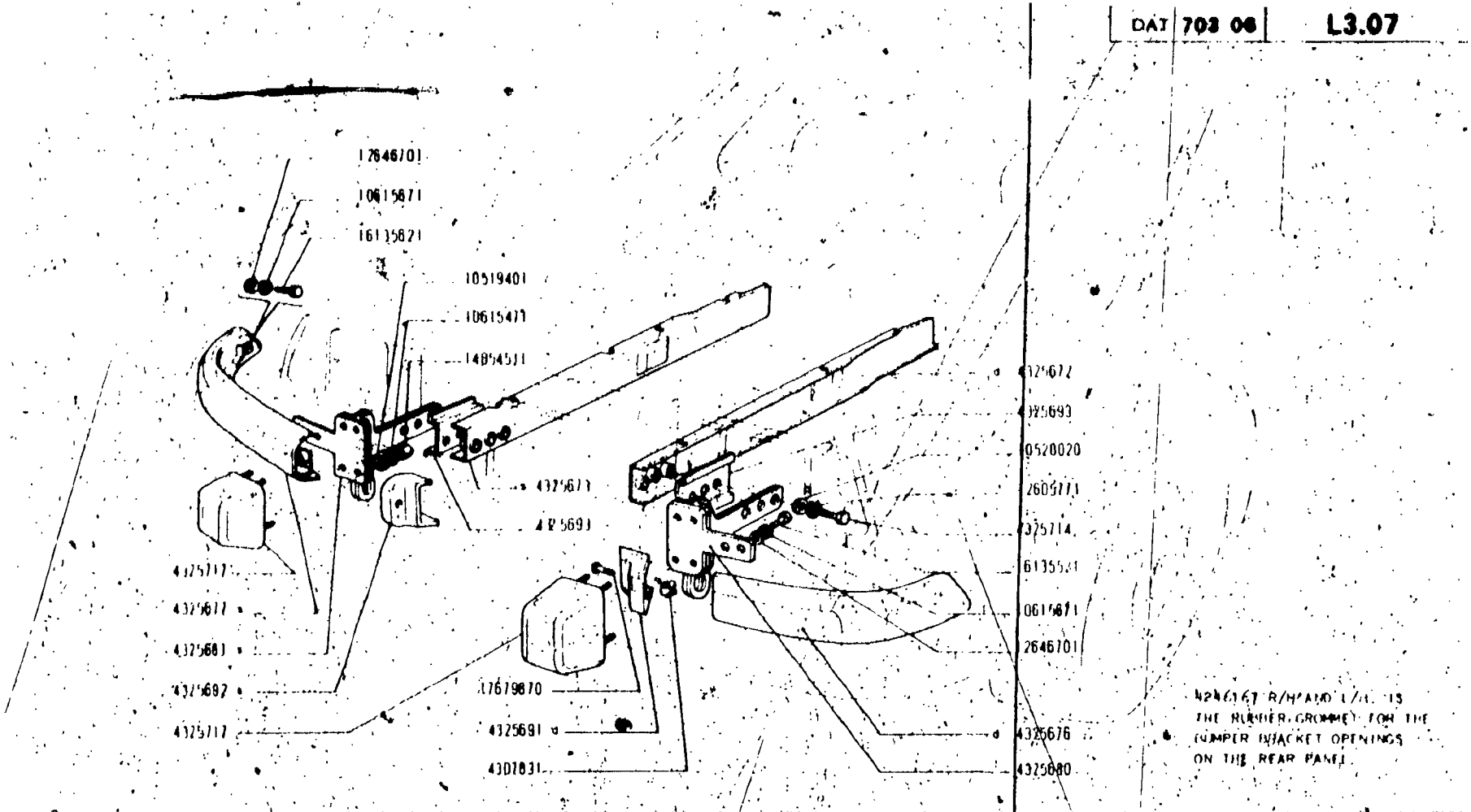

128 N. Am. X1/9 **128 AS**	1974	**PARAURTI POSTERIORE** *Pare-chocs AR* *Hinterer Stossfänger* *Rear Bumper* *Parachoques posterior*	**L3.07**

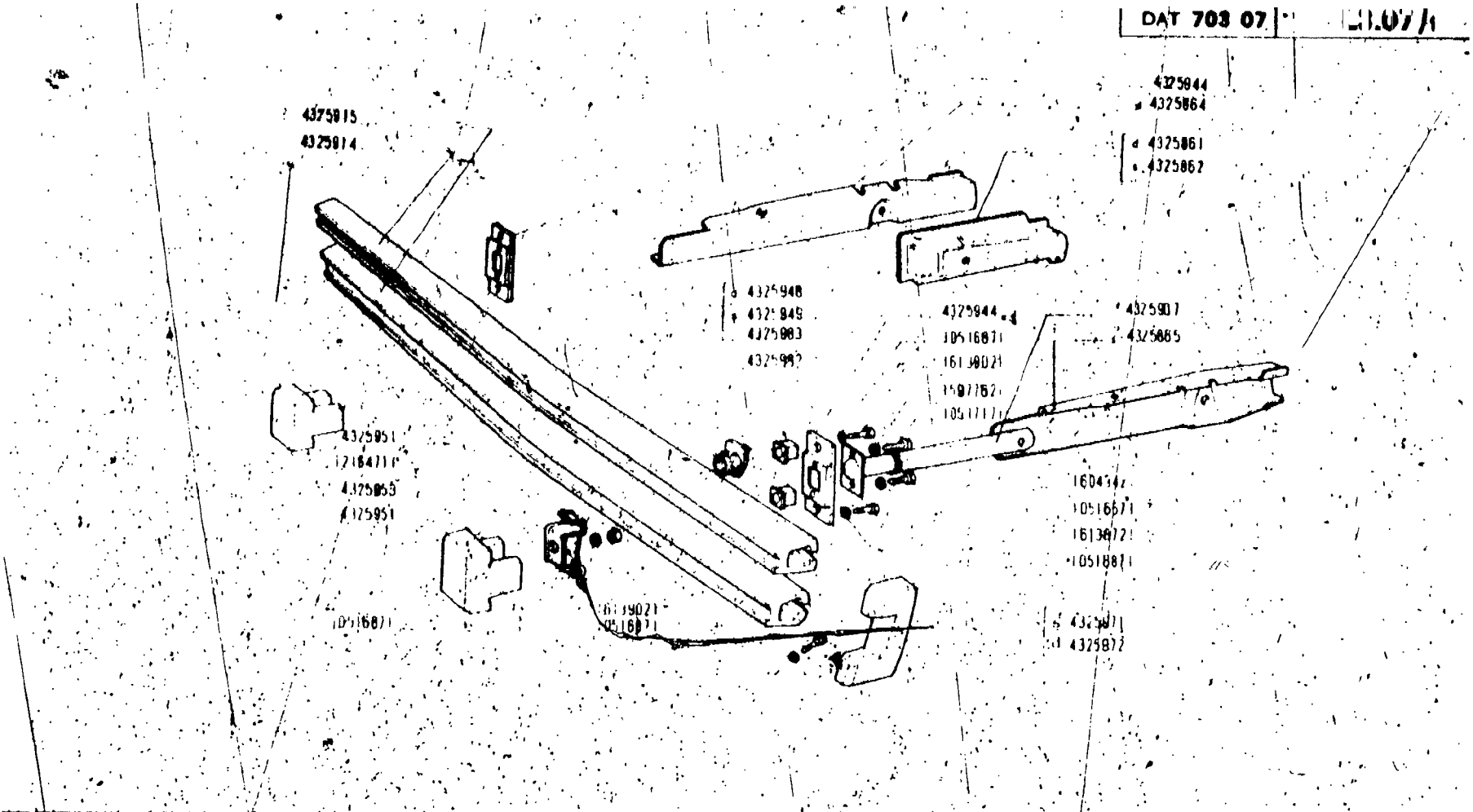

128 N° Am

x 1/9

128 AS

1975

PARAURTI POSTERIORE

Pare-chocs AR
Hinterer Stossfänger

Rear Bumper
Parachoques posterior

MASTER INDEX

GROUP	GRID
L BODY EXTERIORS	A-1
M BODY INTERIORS	D-1
PARTS LISTS	E-1
ADDITIONAL	E-12 L
ORDERING PARTS	F-2
USE OF CATALOG	F-3/F-7
ENGLISH	F-6
DAT CODES	F-8
ABBREVIATIONS	F-9
VERSION	F-10
MODIFICATION	F-11
PAINT LIST, U.S.A.	F-2/F-4 LOWER
ACCESSORIES, U.S.A.	F-5 LOWER
ACCESSORIES, CANADA	F-6 LOWER

THIS PAGE
INTENTIONALLY LEFT
BLANK

MASTER INDEX
Fiche # 08-W

GROUP	GRID
L BODY EXTERIORS	A-1
M BODY INTERIORS	D-1
PARTS LISTS	E-1
ADDITIONAL	E-12 L
ORDERING PARTS	F-2
USE OF CATALOG	F-3/F-7
F-ENGLISH	F-6
DAT CODES	F-8
ABBREVIATIONS	F-9
VERSION	F-10
MODIFICATION	F-11
PAINT LIST, U.S.A.	F-2/F-4 LOWER
ACCESSORIES, U.S.A.	F-5 LOWER
ACCESSORIES, CANADA	F-6 LOWER

M BODY INTERIORS

PLATE NO.	SUBGROUP	GRID
M1.01	FRONT SEATS	D-2
M1.06	BATS	D-3
M1.07	INTERIOR TRIM & ACCESSORIES	D-4
M1.04	SPARE WHEEL ARRANGEMENT	D-7

BASIC VERSION

26=REAR WINDOW DEFOG

30=TINTED GLASS

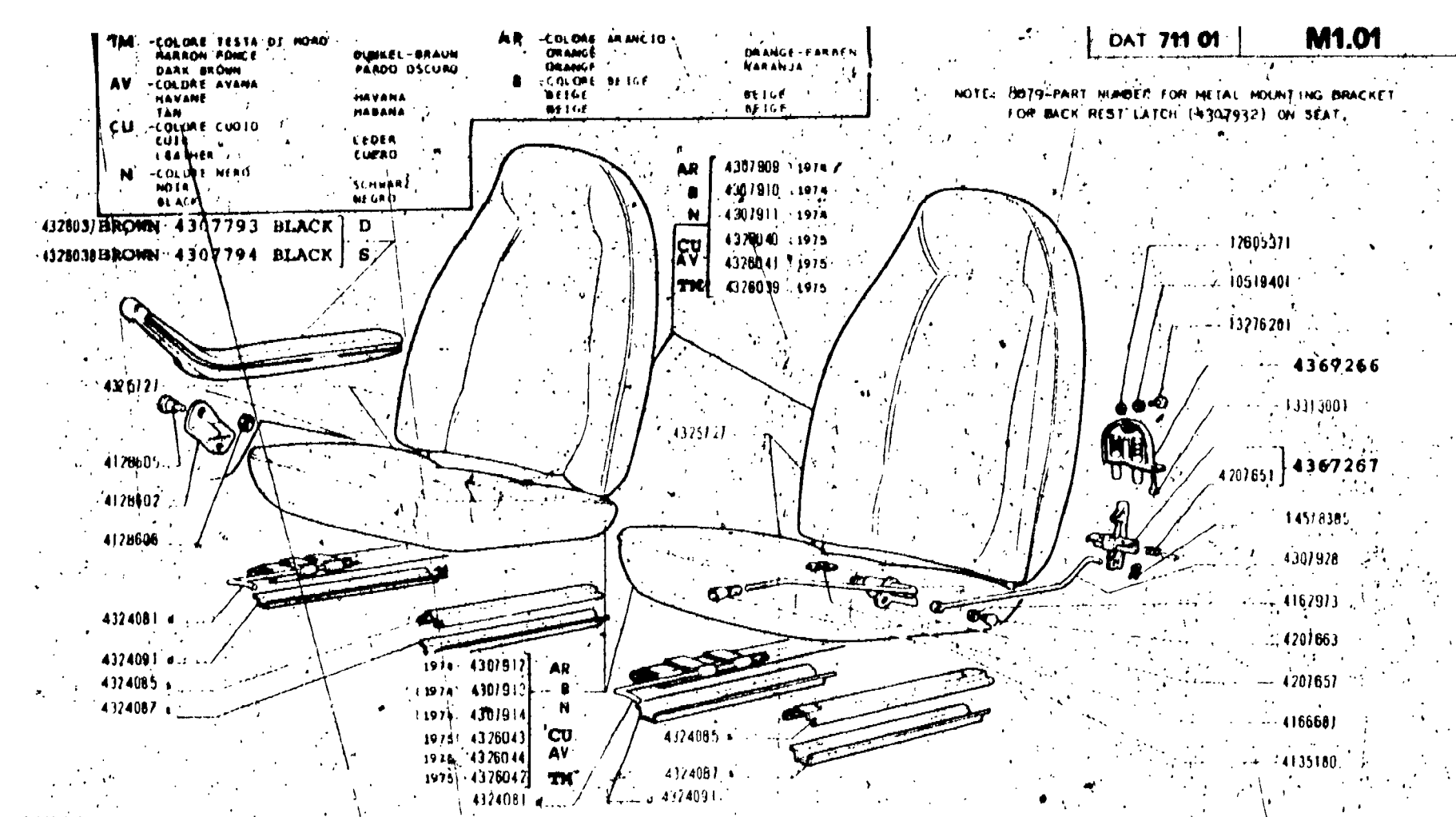
TM -COLORE TESTA DI MORO
MARRON FONCE
DARK BROWN
DUNKEL-BRAUN
PARDO OSCURO
AV -COLORE AVANA
HAVANE
TAN
HAVANA
HABANA
CU -COLORE CUOIO
CUIR
LEATHER
LEDER
CUERO
N -COLORE NERO
NOIR
BLACK
SCHWARZ
NEGRO
AR -COLORE ARANCIO
ORANGE
ORANGE
ORANGE-FARBEN
NARANJA
B -COLORE BEIGE
BEIGE
BEIGE
BEIGE
BEIGE
NOTE: 8079-PART NUMBER FOR METAL MOUNTING BRACKET FOR BACK REST LATCH (4307932) ON SEAT.
4328031 BROWN 4307793 BLACK D
4328038 BROWN 4307794 BLACK S
AR 4307909 1974
B 4307910 1974
N 4307911 1974
CU 4376040 1975
AV 4376041 1975
TM 4376039 1975
12605371
10519401
13276201
4369266
13313001
4207651
4367267
14578385
4307928
4162973
4207663
4207657
4166681
4135180
4326121
4128605
4128602
4128606
4325127
4324081
4324091
4324085
4324087
1974 4307912 AR
1974 4307913 B
1974 4307914 N
1975 4376043 CU
1975 4376044 AV
1975 4376042 TM
4324081
4324085
4324087
4324091

AR	-COLORE ARANCIO ORANGE ORANGE	ORANGE-FARBEN NARANJA	M	-COLORE MARRONE MARRON BROWN	BRAUN PARDO
AZ	-COLORE AZZURRO BLEU LIGHT BLUE	BLAU AZUL	R	-COLORE ROSSO ROUGE RED	ROT ROJO
TM	-COLORE TESTA DI MORO MARRON FONCE DARK BROWN	DUNKEL-BRAUN PARDO OSCURO			
GI	-COLORE GIALLO JAUNE YELLOW	GELB AMARILLO			

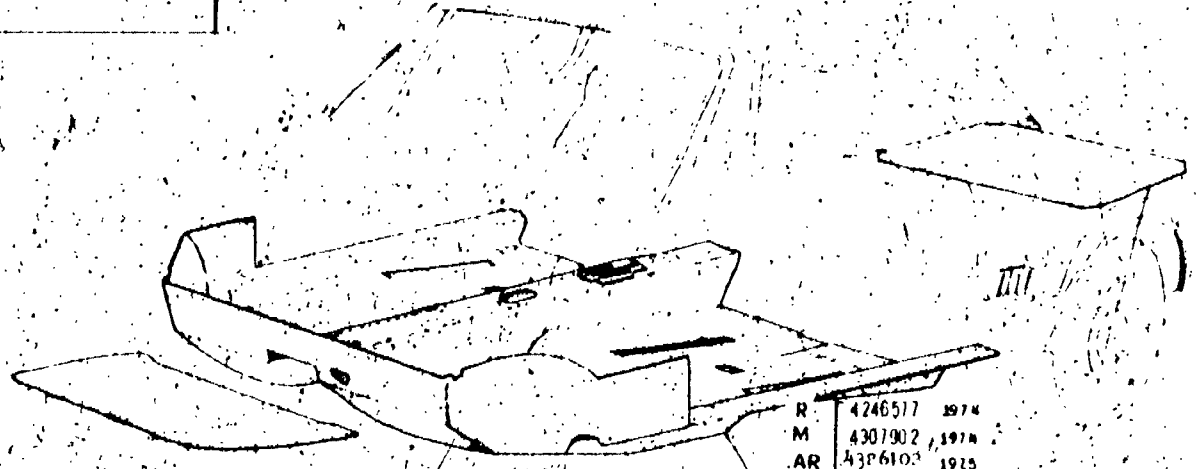

128 N. Art. x'1/9 **128 AS.**	1974 1975	*Tapis* *Bodenbelage*	**TAPPETI** *Mats* *Alfombras*	**M1.06**

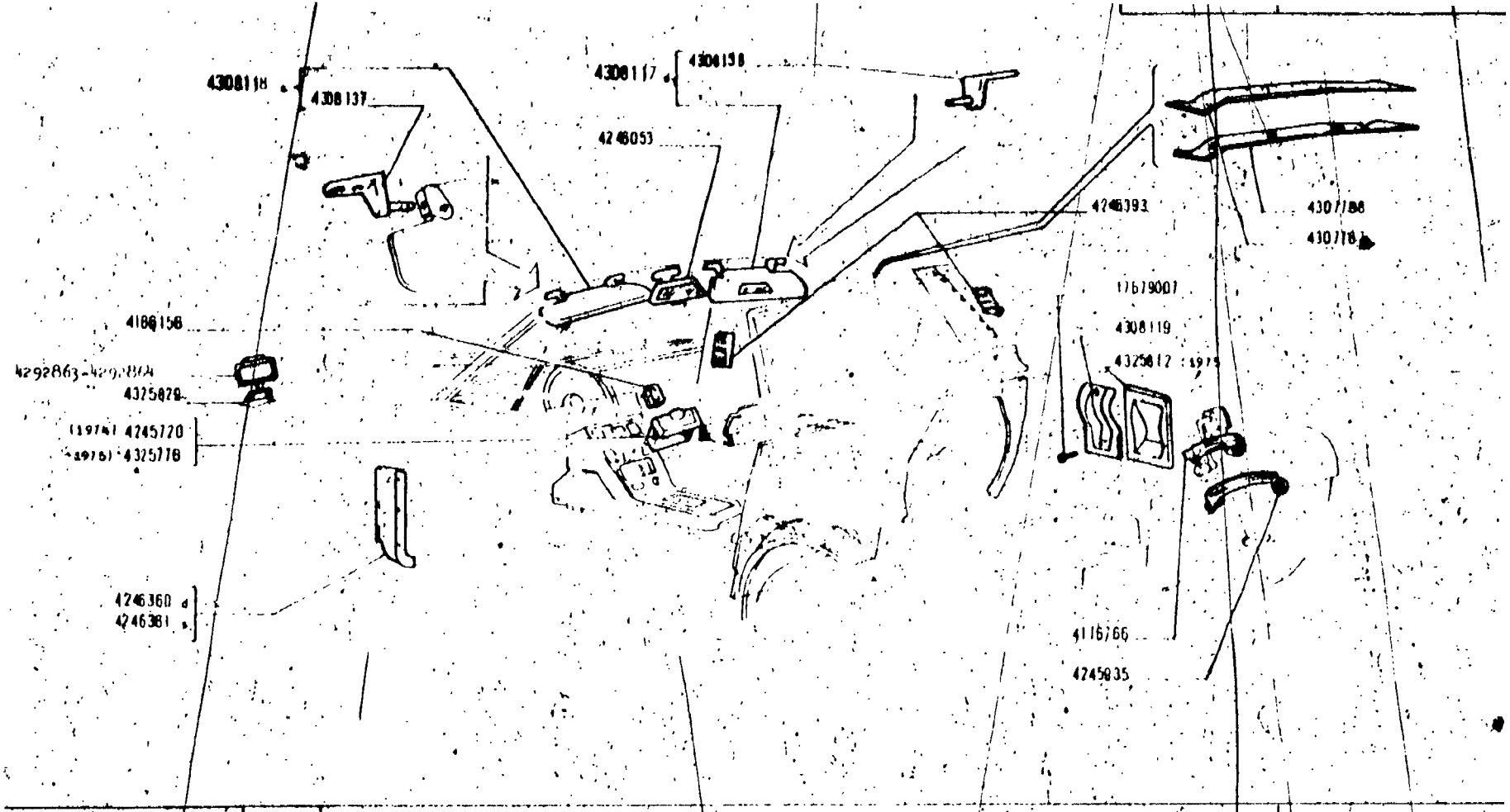

128 N. Am.

x 1/9

128 AS

1974
1975

ACCESSORI E RIVESTIMENTI INTERNI

Accessoires et garnissages intérieurs
Inneres Zubehör und Verkleidungen
Interior Trim and Accessories
Accesorios y tapizado interiores

M1.07

TM	COLORE TESSUTO DI NERO MARRON FONCE DARK BROWN	DUNKEL BRAUN PARDO OSCURO	N	COLORE NERO NOIR BLACK	SCHWARZ NEGRO
AV	COLORE AVANA HAVANE TAN	HAVANA HABANA	AR	COLORE ARANCIO ORANGE ORANGE	ORANGE-FARBEN NARANJA
CU	COLORE CUOIO CUIR LEATHER	LEDER CUERO	B	COLORE BEIGE BEIGE BEIGE	BEIGE BEIGE

1978	4326080	TM
1975	4326081	AV
1975	4326082	CU

1975	4326853	N
1974	4307956	
1976	4326080	TM
1975	4326081	AV
1975	4326082	CU
1975	4326064 (26)	TM
1975	4326066 (26)	AV
1975	4326067 (26)	CU

1974	4308105	
1978	4325830	N
1975	4326087	TM
1975	4326088	AV
1975	4326089	CU

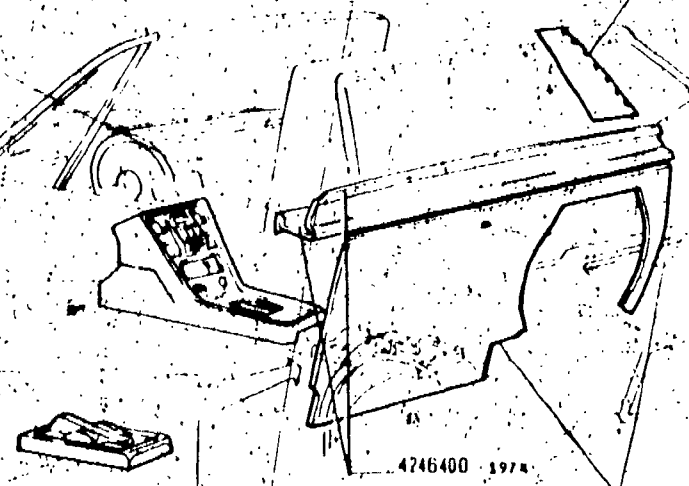

N	4308092	
N	4308093	

TM	4326077	1975
AV	4326078	1975
CU	4326079	1975

TM	4326077	1975
AV	4326073	1975
CU	4326074	1975
N	4246649	1974
B	4307972	1974
AR	4307973	1974

NOTE: PART NUMBERS FOR MOULDING BETWEEN DOOR FRAME AND BACK PANEL ARE 4308092 R/H AND 4308093 L/H.

128 N Ami

1/9

128 AS

(26) REAR WINDOW DEFOG.

1974
1975

ACCESSORI E RIVESTIMENTI INTERNI

Accessoires et garnissages intérieurs
Innenes Zubehör und Verkleidungen

Interior Trim and Accessories
Accesorios y tapizado interiores

M1.07

2

NOTE: 1974 SEAT BELT AND RETRACTOR PART NUMBERS.
(USA.) 8724 - LEFT RETRACTOR AND BELT
8730 - RIGHT RETRACTOR AND BELT
(CANADA) 1671 - LEFT & RIGHT HAND

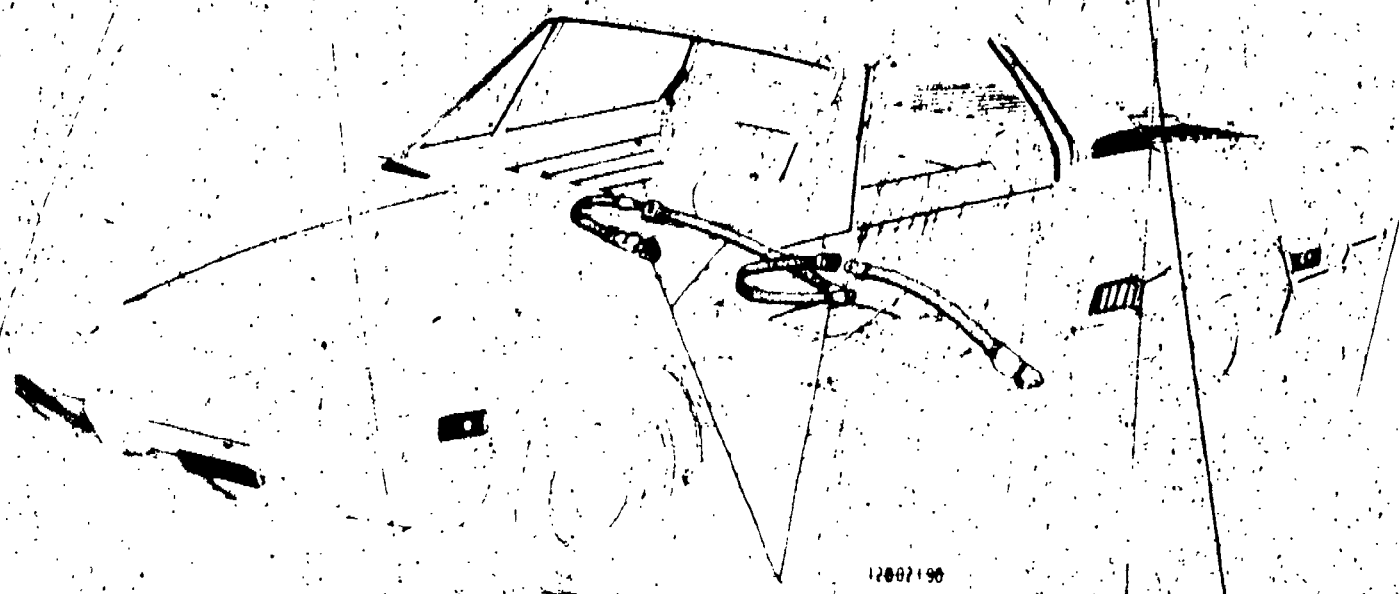

ACCESSORI E RIVESTIMENTI INTERNI

Accessoires et garnissages intérieurs
Inneres Zubehör und Verkleidungen
Interior Trim and Accessories
Accesorios y tapizado interiores

Questo documento è stato
scaricato GRATUITAMENTE
Da www.iw1axr.eu/auto.htm

Questo documento è stato
scaricato GRATUITAMENTE
Da www.iw1axr.eu/auto.htm

Questo documento è stato
scaricato GRATUITAMENTE
Da www.iw1axr.eu/auto.htm

Questo documento è stato
scaricato GRATUITAMENTE
Da www.iw1axr.eu/auto.htm

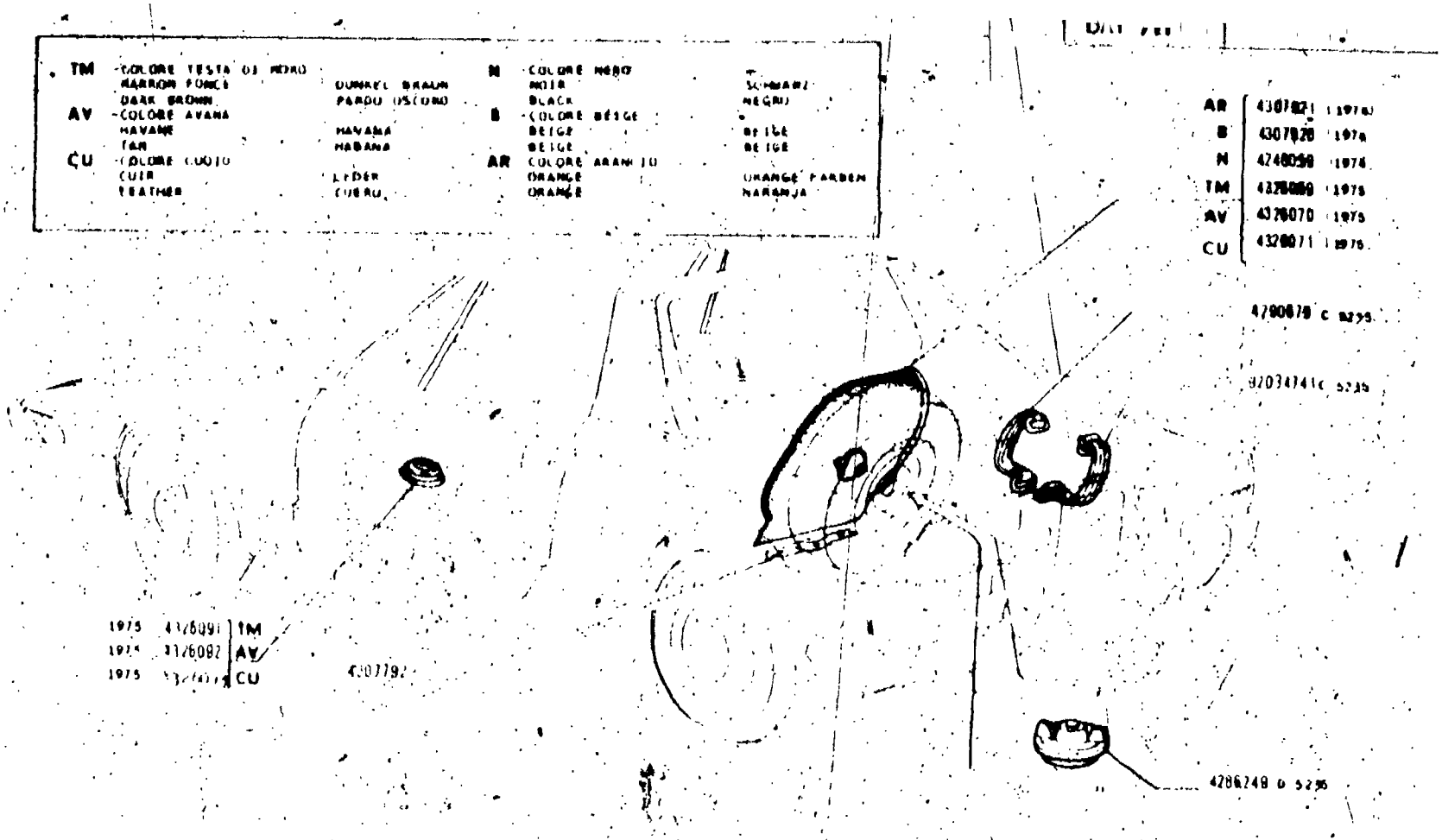

128 N Am

128 AS

1974
1975

SISTEMAZIONE RUOTA DI SCORTA

Aménagement de roue de secours
Unterbringung des Ersatzrads

Spare Wheel Arrangement
Cavidad para rueda de repuesto

M1.08

MASTER INDEX

GROUP	GRID
L BODY EXTERIORS	A-1
M BODY INTERIORS	D-1
PARTS LISTS	E-1
ADDITIONAL	E-12 L
ORDERING PARTS	F-2
USE OF CATALOG	F-3/F-7
ENGLISH	F-6
PAINT CODES	F-8
ABBREVIATIONS	F-9
VERSIONS	F-10
MODIFICATION	F-11
PAINT LIST, U.S.A.	F-2/F-4 LOWER
ACCESSORIES, U.S.A.	F-5 LOWER
ACCESSORIES, CANADA	F-6 LOWER

THIS PAGE
INTENTIONALLY LEFT
BLANK

MASTER INDEX

Fiche A-48-W

GROUP	GRID
L BODY EXTERIORS	A-1
H BODY INTERIORS	D-1
PARTS LISTS	E-1
ADDITIONAL	E-12 L
ORDERING PARTS	F-2
USE OF CATALOG	F-3/F-7
ENGLISH	F-6
DAT CODES	F-8
ABBREVIATIONS	F-9
VERSION	F-10
MODIFICATION	F-11
PAINT LIST, U.S.A.	F-2/F-4 LOWER
ACCESSORIES, U.S.A.	F-5 LOWER
ACCESSORIES, CANADA	F-6 LOWER

PARTS LIST

PART NUMBER	GRID
895510	E-3
4222678	E-4
4245295	E-5
4245380	E-6
4245491	E-7
4245650	E-8
4245759	E-9
4245933	E-10
4246269	E-11
4246498	E-12
4307821	E-13

PLEASE NOTE

IF YOU DO NOT FIND THE PART NUMBER IN THE PARTS LIST CONTAINED BETWEEN E-3 U AND E-11 L PLEASE CHECK THE ADDITIONAL PARTS LIST CONTAINED ON E-12/13 L WHICH CONTAINS THE MOST RECENT PART NUMBERS.

MODEL.	N. ORDINAZ.	SGR.	Q.	DENOMINAZIONE	DESIGNATION	BENENNUNG	DESCRIPTION	DENOMINACIONES
	095519	L123	2	TASSELLO ELASTICO LAT.	TAMPON	GUMMISTOECK	PAD	ALMOHADILLA
	975942	L102	1	ANELLO DI GOMMA	BAGUE CAOUTCHOUC	GUMMIRING	RUBBER RING	GUARNICION DE CAUCHO
	975942	L102		ERA 4245869				
	997215	L109	2	PERNO	AXE	BOLZEN	PIN	EJE
ERA	1006913	L118		VEDI 6173888				
	4074148	L123	1	DISTANZIALE	ENTRETOISE	ABSTANDSTOECK	SPACER	SEPARADOR
	4100954	L123	1	CARRUCOLA	POULIE	SEILROLLE	SHEAVE	RODDANA
	4100956	L123	1	CARRUCOLA	POULIE	SEILROLLE	SHEAVE	RODDANA
	4100831	L109	2	POMELLO	BOUTON	KNEBELGRIFF	KNOB	BOTON
	4112977	L126	4	FERMAGLIO	AGRAFE	KLEMMSTUECK	CLIP	SUJETADOR
	4112979	L126	8	FERMAGLIO	AGRAFE	KLEMMSTUECK	CLIP	SUJETADOR
	4116766	M107	1	CINGHIA SUP.	SANGLE	HALTERIEMEN	STRAP	CORREA
	4116766	M107		ERA 4245929				
	4128602	M101	4	PIASTRA	PLAQUE	PLATTE	PLATE	PLACA
	4128605	M101	4	PERNO	AXE	BOLZEN	PIN	EJE
	4128606	M101	4	ROSETTA	RONDELLE	SCHEIBE	WASHER	ARANDELA
	4131830	L109	4	PIASTRINA	PLAQUETTE	PLAETTCHEN	PLATE	PLACA
	4131850	L109	2	TASSELLO ELASTICO SUP.	TAMPON	GUMMISTOECK	PAD	ALMOHADILLA
	4134256	L125	2	SIGLA	MOTIF	FIRMENKENNZEICHEN	MARK MEDALLION	EMBLEMA
SOST	4134615	L109		CON 4138437				
	4135180	M104	2	POMELLO	BOUTON	KNEBELGRIFF	KNOB	BOTON
	4138439	L109	2	FERMAGLIO	AGRAFE	KLEMMSTUECK	CLIP	SUJETADOR
	4138241	L109	12	VITE	VIS	SCHRAUBE	SCREW	TORNILLO
	4158634	L102	1	GHIERA	ECROU	GEWINDERING	THREADED RING	TUERCA
	4158636	L102	1	BLOCCHETTI DI CHIUSURA	MANILLETS DE SERRURE	SCHLOSSZYLINDER	LOCK CYLINDERS	CILINDROS DE CERRADURA
	4158637	L102	1	MOLLA	RESSORT	FEDER	SPRING	RESORTE
	4162973	M101	2	ROSETTA DI SICUREZZA	RONDELLE FREIN	SICHERUNGSRING	LOCKWASHER	ARANDELA DE FRENO
C 5149	4165585	C109	1	MANIGLIA INT.D	POIGNEE	GRIFF	HANDLE	PESTILLO
C 5149	4165586	L109	1	MANIGLIA INT.S	POIGNEE	GRIFF	HANDLE	PESTILLO
	4166156	L102	5	CORNICE	MONTURE	RAHMEN	FRAME	MARCO
	4166156	M107	4	CORNICE	MONTURE	RAHMEN	FRAME	MARCO
	4166677	P109	2	ROSONE	ROSSELET	ROSETTE	ORNAMENT	VIROLA
	4166681	M101	2	ROLLETTA	AGRAFE	KLEMMSTUECK	CLIP	SUJETADOR
	4167300	L123	1	MOLLA	RESSORT	FEDER	SPRING	RESORTE
	4173888	L118	1	PROFILATO SIGILLANTE PER CRISTALLO	BANDE HERMETIQUE POUR GLACE	ABDICHTPROFIL FUER GLASSCHEIBE	SEALING STRIP FOR GLASS PANE	CINTON HERMETICO PARA CRISTAL
	4173888	L118		ERA 1906913				
ELIM	4186666	L109						
ERA	4198989	M101		VEDI 14578385				
	4207651	M101	2	MOLLA	RESSORT	FEDER	SPRING	RESORTE
	4207652	M101	2	SCONTRINO	GACHE	GESPERRE	STRIKER PLATE	CERRADERO
	4207657	M101	2	LEVA	LEVIER	HEBEL	LEVER	PALANCA
	4207663	M101	2	PERNO	AXE	BOLZEN	PIN	EJE
	4219381	L109	2	ANELLO DI GOMMA	BAGUE CAOUTCHOUC	GUMMIRING	RUBBER RING	GUARNICION DE CAUCHO

MODIF.	N.ORDINAZ.	SGR.	Q.	DENOMINAZIONE	DESIGNATION	BENENNUNG	DESCRIPTION	DENOMINACIONES
	4222578	L109	1	SCONTRINO D	GACHE	GESPERRE	STRIKER PLATE	CERRADERO
	4222579	L109	1	SCONTRINO S	GACHE	GESPERRE	STRIKER PLATE	CERRADERO
ERA	4246518	M108						
	4241252	L107	2	MANIGLIA	POIGNEE	KURBEL	HANDLE	MANIVELA
	4241260	L109	2	ROSONE	ROSACE	ROSETTE	ORNAMENT	VIROLA
	4244995	L125	2	STAFFA ANT.	ETRIER	HALTER	BRACKET	SOPORTE
	4245069	L103	1	LONGHERONE ANT.D	LONGERON	LAENGSTRAEGER	SIDE MEMBER	LARGUERO
	4245001	L103	1	LONGHERONE ANT.S	LONGERON	LAENGSTRAEGER	SIDE MEMBER	LARGUERO
	4245086	L104	1	COPERCHIO D	COUVERCLE	DECKEL	COVER	TAPA
	4245087	L104	1	COPERCHIO S	COUVERCLE	DECKEL	COVER	TAPA
	4245122	L104	1	RINFORZO D	RENFORT	VERSTAERKUNG	REINFORCEMENT	REFUERZO
	4245123	L104	1	RINFORZO S	RENFORT	VERSTAERKUNG	REINFORCEMENT	REFUERZO
	4245124	L104	1	PARETE ANT.(1974)	PAROI	WAND	WALL	TABIQUE
	4245132	L105	1	RIVESTIMENTO FRONT.ANT.CENTR.SUP. (1974)	REVETEMENT	VERKLEIDUNG	PANEL	PANEL
	4245161	L104	1	FIANCATA INT.POST.D	COTE DE COUPE	SEITENWAND	SIDE PANEL	COSTADO
	4245165	L104	1	FIANCHETTO ANT.LAT.D	TABLIER	SEITENBLECH	SIDE PANEL	COSTADO
	4245166	L104	1	FIANCHETTO ANT.LAT.S	TABLIER	SEITENBLECH	SIDE PANEL	COSTADO
	4245170	L105	1	RIVESTIMENTO D -PER VANO PORTA	REVETEMENT -DE BAIE DE PORTE	VERKLEIDUNG -FUER TUERDEFFNUNG	PANEL -FOR DOOR OPENING	PANEL -DE PUERTA
	4245171	L105	1	RIVESTIMENTO S -PER VANO PORTA	REVETEMENT -DE BAIE DE PORTE	VERKLEIDUNG -FUER TUERDEFFNUNG	PANEL -FOR DOOR OPENING	PANEL -DE PUERTA
	4245174	L105	1	RIVESTIMENTO LAT.ANT.D (1974)	REVETEMENT	VERKLEIDUNG	PANEL	PANEL
	4245175	L105	1	RIVESTIMENTO LAT.ANT.S (1974)	REVETEMENT	VERKLEIDUNG	PANEL	PANEL
	4245179	L105	1	RIVESTIMENTO POST.(1974)	REVETEMENT	VERKLEIDUNG	COVERING	FORRO
	4245180	L105	1	RIVESTIMENTO LAT.POST.D (1974)	REVETEMENT	VERKLEIDUNG	PANEL	PANEL
	4245181	L105	1	RIVESTIMENTO LAT.POST.S (1974)	REVETEMENT	VERKLEIDUNG	PANEL	PANEL
	4245197	L123	2	CERNIERA	CHARNIERE	SCHARNIER	HINGE	BISAGRA
	4245210	L123	1	SCONTRINO POST.	GACHE	GESPERRE	STRIKER PLATE	CERRADERO
	4245261	L104	1	PARETE ANT.	PAROI	WAND	WALL	TABIQUE
	4245268	L104	1	ELEMENTO COLLEGAMENTO LAT.D	ELEMENT DE LIAISON	VERBINDUNGSTEIL	JOINING ELEMENT	ELEMENTO DE UNION
	4245269	L104	1	ELEMENTO COLLEGAMENTO LAT.S	ELEMENT DE LIAISON	VERBINDUNGSTEIL	JOINING ELEMENT	ELEMENTO DE UNION
	4245277	L123	1	CERNIERA D ANT.	CHARNIERE	SCHARNIER	HINGE	BISAGRA
	4245278	L123	1	CERNIERA S ANT.	CHARNIERE	SCHARNIER	HINGE	BISAGRA
	4245284	L123	2	PERNO	AXE	BOLZEN	PIN	EJE
	4245288	L103	1	TELAIO ANT.INF. -PER SOSPENSIONE	CHASSIS -POUR SUSPENSION	RAHMEN -FUER AUFHAENGUNG	FRAMING -FOR SUSPENSION	BASTIDOR -PARA SUSPENSION
	4245290	L104	1	SCATOLAMENTO ANT.	FERRURE	KASTENELEMENT	BOXED PANEL	REFUERZO

MODIF.	NUMERO ORDINAZ.	SAR.	Q.	DENOMINAZIONE	DESIGNATION	BENENNUNG	DESCRIPTION	DENOMINACIONES
	4249095	1109	1	RIVESTIMENTO PER PARABREZZA	REVETEMENT POUR PARE-BRISE	VERKLEIDUNG FUER WINDSCHUTZ-SCHEIBE	PANEL FOR WINDSHIELD	PANEL PARA PARABRISAS
	4249325	1109	1	OSSATURA SUP. PER PARABREZZA	OSSATURE POUR PARE-BRISE	RAHMENWERK FUER WINDSCHUTZ-SCHEIBE	FRAMING FOR WINDSHIELD	ARMAZON PARA PARABRISAS
	4249331	1109	1	RIVESTIMENTO SUP.ANT.ROLL-BAR	REVETEMENT	VERKLEIDUNG	PANEL	PANEL
	4249332	1109	1	RIVESTIMENTO SUP.POST.ROLL-BAR	REVETEMENT	VERKLEIDUNG	PANEL	PANEL
	4249330	1109	1	RIVESTIMENTO LAT.ANT.D ROLL-BAR	REVETEMENT	VERKLEIDUNG	PANEL	PANEL
	4249334	1109	1	RIVESTIMENTO LAT.ANT.S ROLL-BAR	REVETEMENT	VERKLEIDUNG	PANEL	PANEL
	4249335	1109	1	RIVESTIMENTO LAT.POST.D ROLL-BAR	REVETEMENT	VERKLEIDUNG	PANEL	PANEL
	4249[illegible]	1109	1	RIVESTIMENTO LAT.POST.S ROLL-BAR	REVETEMENT	VERKLEIDUNG	PANEL	PANEL
	4249336	1104	1	RINFORZO INF.D	RENFORT	VERSTAERKUNG	REINFORCEMENT	REFUERZO
	4249339	1104	1	RINFORZO INF.S	RENFORT	VERSTAERKUNG	REINFORCEMENT	REFUERZO
	4249340	1104	1	ELEMENTO COLLEGAMENTO D PER VANO PORTA	ELEMENT DE LIAISON DE BAIE DE PORTE	VERBINDUNGSTEIL FUER TUEROEFFNUNG	JOINING ELEMENT FOR DOOR OPENING	ELEMENTO DE UNION DE PUERTA
	4249344	1104	1	ELEMENTO COLLEGAMENTO S PER VANO PORTA	ELEMENT DE LIAISON DE BAIE DE PORTE	VERBINDUNGSTEIL FUER TUEROEFFNUNG	JOINING ELEMENT FOR DOOR OPENING	ELEMENTO DE UNION DE PUERTA
	4249347	1101	1	PIANALE ROLL-BAR	PLATEAU	PLATTE	PANEL	PLATAFORMA
	4249354	1104	1	ELEMENTO COLLEGAMENTO SUP.	ELEMENT DE LIAISON	VERBINDUNGSTEIL	JOINING ELEMENT	ELEMENTO DE UNION
	4249356	1104	1	SEDE DELLA BATTERIA 219/41	SIEGE DE BATTERIE	BATTERIESITZ	BATTERY SEAT	SOPORTE DE BATERIA
	4249358	1101	1	SCATOLAMENTO LAT.D PER LONGHERONE	FERRURE POUR LONGERON	KASTENELEMENT FUER LAENGSTRAEGER	BOXED PANEL FOR SIDE MEMBER	REFUERZO PARA LARGUERO
	4249359	1101	1	SCATOLAMENTO LAT.S PER LONGHERONE	FERRURE POUR LONGERON	KASTENELEMENT FUER LAENGSTRAEGER	BOXED PANEL FOR SIDE MEMBER	REFUERZO PARA LARGUERO
	4249361	1101	1	GUARNIZIONE ANT.INF.S	REVETEMENT	VERKLEIDUNG	COVERING	FORRO
	4249363	1104	1	ELEMENTO COLLEGAMENTO D	ELEMENT DE LIAISON	VERBINDUNGSTEIL	JOINING ELEMENT	ELEMENTO DE UNION
	4249364	1104	1	ELEMENTO COLLEGAMENTO S	ELEMENT DE LIAISON	VERBINDUNGSTEIL	JOINING ELEMENT	ELEMENTO DE UNION
	4249365	1104	1	OSSATURA LAT.D ROLL-BAR	OSSATURE	RAHMENWERK	FRAMING	ARMAZON
	4249366	1104	1	OSSATURA LAT.S ROLL-BAR	OSSATURE	RAHMENWERK	FRAMING	ARMAZON
	4249371	1109	4	CERNIERA FISSA	CHARNIERE FIXE	SCHARNIER, FEST	FIXED HINGE	BISAGRA FIJA
	4249373	1109	4	PERNO	AXE	BOLZEN	PIN	EJE

MODIF.	N.ORDINAZ.	SERZ	N°	DENOMINAZIONE	DESIGNATION	BENENNUNG	DESCRIPTION	DENOMINACIONES
	4245380	L103	1	PUNTONE S	STAI	STIEBE	STRUT	TORNAPUNTA
	4245381	L103	1	PUNTONE S	STAI	STIEBE	STRUT	TORNAPUNTA
	4245382	L104	1	PARETE ANT. PER PRESA D'ARIA	WAND FÜR PRISE D'AIR	WAND FÜR LUFTEINTRITT	WALL FOR AIR INTAKE	PARA BOCA DE AIRE
	4245383	L104	1	RINFORZO D POST.-ROLL-BAR	VERSTAERKUNG	VERSTAERKUNG	REINFORCEMENT	REFUERZO
	4245384	L104	1	ELEMENTO COLLEGAMENTO INF.D ROLL-BAR	ELEMENT DE LIAISON	VERBINDUNGSTEIL	JOINING ELEMENT	ELEMENTO DE UNION
	4245385	L104	1	ELEMENTO COLLEGAMENTO INF.S ROLL-BAR	ELEMENT DE LIAISON	VERBINDUNGSTEIL	JOINING ELEMENT	ELEMENTO DE UNION
	4245388	L104	1	RINFORZO S POST.-ROLL-BAR	VERSTAERKUNG	VERSTAERKUNG	REINFORCEMENT	REFUERZO
	4245391	L105	1	ELEMENTO COLLEGAMENTO ANT. PER VANO PORTA	ELEMENT DE LIAISON	VERBINDUNGSTEIL	JOINING ELEMENT	ELEMENTO DE UNION DE PUERTA
	[illegible]	[illegible]	[illegible]	ELEMENTO COLLEGAMENTO ANT. PER VANO PORTA	ELEMENT DE LIAISON	VERBINDUNGSTEIL	JOINING ELEMENT	ELEMENTO DE UNION DE PUERTA
	[illegible]	[illegible]	[illegible]	ELEMENTO COLLEGAMENTO ANT. PER VANO PORTA	ELEMENT DE LIAISON	VERBINDUNGSTEIL	JOINING ELEMENT	ELEMENTO DE UNION DE PUERTA
	4245396	[illegible]	[illegible]	[illegible]	[illegible]	[illegible]	SEAT	ASIENTO
	[illegible]	[illegible]	[illegible]	[illegible]	[illegible]	[illegible]	[illegible]	ASIENTO
	4245399	[illegible]	[illegible]	[illegible]	[illegible]	[illegible]	[illegible]	ANA
	[illegible]	[illegible]	[illegible]	[illegible]	[illegible]	[illegible]	[illegible]	ANA
	[illegible]	[illegible]	[illegible]	[illegible]	[illegible]	[illegible]	[illegible]	ANA
	[illegible]	[illegible]	[illegible]	[illegible]	[illegible]	[illegible]	[illegible]	PARA LAPIZ
	[illegible]	[illegible]	[illegible]	[illegible]	[illegible]	RAHMEN	FRAME	MARCO
	[illegible]	[illegible]	[illegible]	[illegible]	[illegible]	RAHMEN	FRAME	MARCO
	[illegible]	[illegible]	[illegible]	[illegible]	[illegible]	[illegible]	WEATHER [illegible]	[illegible]
	[illegible]	[illegible]	[illegible]	[illegible]	[illegible]	[illegible]	GRATE	REJILLA
	[illegible]	[illegible]	[illegible]	[illegible]	[illegible]	RAHMEN	FRAME	MARCO
	[illegible]	[illegible]	[illegible]	MANICOTTO [illegible]	MUFFE [illegible]	[illegible]	MANGE W/CYLINDER	MANGUITO [illegible] CILINDROS
	[illegible]	[illegible]	[illegible]	MANICOTTO [illegible]	MUFFE [illegible]	[illegible]	MANGE W/CYLINDER	MANGUITO [illegible] CILINDROS
	4245475	[illegible]	[illegible]	[illegible]	[illegible]	[illegible]	LOCK CYLINDERS	CILINDROS DE CERRADURA
	[illegible]	[illegible]	[illegible]	[illegible]	[illegible]	RELAIS	PANEL	SEGURO
	[illegible]	[illegible]	[illegible]	[illegible]	[illegible]	RELAIS	PANEL	SEGURO
	4245518	[illegible]	[illegible]	MOLLA	FEDER	FEDER	SPRING	RESORTE
	[illegible]	[illegible]	[illegible]	MANICOTTO [illegible]	MUFFE [illegible]	[illegible]	MANGE W/CYLINDER	MANGUITO [illegible] CILINDROS
	4245486	[illegible]	[illegible]	[illegible]	[illegible]	[illegible]	LOCK CYLINDERS	CILINDROS DE CERRADURA

MODIF.	N.ORDINAZ.	SCR.	Q.	DENOMINAZIONE	DESIGNATION	BENENNUNG	DESCRIPTION	DENOMINACIONES
	4246491	L123	1	RUSETTA DI SICUREZZA	RONDELLE FREIN	SICHERUNGSRING	LOCKWASHER	ARANDELA DE FRENO
	4245494	L127	2	CERNIERA CENTR.POST.(1974)	CHARNIERE	SCHARNIER	HINGE	BISAGRA
	4245504	L127	1	PUNTELLO	BEQUILLE	STREBE	STAY	PUNTAL
	4245505	L127	1	SCONTRINO (1974)	GACHE	GESPERRE	STRIKER PLATE	CERRADERO
	4245513	L127	1	GUARNIZIONE LAT.POST.D	GARNITURE	UNTERLAGE	LINING	FORRO
	4245514	L127	1	GUARNIZIONE LAT.POST.S	GARNITURE	UNTERLAGE	LINING	FORRO
ERA	4245534	L123		VED 4302884				
	4245535	L102	4	DIFFUSORE INT.A	DIFFUSEUR	DUESE	DIFFUSER	DIFUSOR
	4245545	L106	1	OSSATURA SUP.ROLL-BAR	OSSATURE	RAHMENWERK	FRAMING	ARMAZON
	4245553	L120	1	PROFILATO DI GOMMA INF.(1974)	PROFILE CAOUTCHOUC	PROFILGUMMI	RUBBER WEATHER-STRIP	PERFIL DE GOMA
	4245589	L109	1	CRISTALLO D	GLACE	GLASSCHEIBE	GLASS	CRISTAL
	4245590	L109	1	CRISTALLO S	GLACE	GLASSCHEIBE	GLASS	CRISTAL
	4245591	L109	2	GUIDA	COULISSIERE	SCHIENE	GUIDE	GUIA
	4245593	L109	1	CANALINO POST.D COMPL.	PROFILE	SCHIENE	CHANNEL	CANAL
	4245594	L109	1	CANALINO POST.S COMPL.	PROFILE	SCHIENE	CHANNEL	CANAL
	4245600	L109	1	ALZACRISTALLO D	LEVE-GLACE	KURBELAPPARAT	WINDOW REGULATOR	ELEVADOR DE CRISTAL
	4245601	L109	1	ALZACRISTALLO S	LEVE-GLACE	KURBELAPPARAT	WINDOW REGULATOR	ELEVADOR DE CRISTAL
	4245604	L109	1	CRISTALLO D	GLACE	GLASSCHEIBE	GLASS	CRISTAL
	4245605	L109	1	CRISTALLO S	GLACE	GLASSCHEIBE	GLASS	CRISTAL
	4245606	L109	1	MONTANTINO ENTR.D	MONTANT	SAULE	PILLAR	MONTANTE
	4245607	L109	1	MONTANTINO ENTR.S	MONTANT	SAULE	PILLAR	MONTANTE
	4245616	L109	2	TASSELLO	TAMPON	BELAGE	PAD	TACO
	4245619	L109	1	SERRATURA COMPL.	SERRURE	SCHLOSS	LOCK	CERRADURA
	4245620	L109	1	SERRATURA S COMPL.	SERRURE	SCHLOSS	LOCK	CERRADURA
	4245621	L109	1	ASTA	TIGE	STANGE	ROD	VARILLA
	4245623	L109	1	TIRANTE	TIRANT	STANGE	ROD	VARILLA
	4245624	L109	1	ASTA	TIGE	STANGE	ROD	VARILLA
	4245626	L109	1	CAPPUCCIO ANT.D	CAPUCHON	SCHUTZKAPPE	BOOT	CAPUCHON
	4245627	L109	1	CAPPUCCIO ANT.S	CAPUCHON	SCHUTZKAPPE	BOOT	CAPUCHON
	4245630	L109	1	GUARNIZIONE EST.D	REVETEMENT	VERKLEIDUNG	COVERING	FORRO
	4245631	L109	1	GUARNIZIONE EST.S	REVETEMENT	VERKLEIDUNG	COVERING	FORRO
	4245634	L109	1	GUARNIZIONE INT.D	REVETEMENT	VERKLEIDUNG	COVERING	FORRO
	4245635	L109	1	GUARNIZIONE INT.S	REVETEMENT	VERKLEIDUNG	COVERING	FORRO
	4245638	L127	1	PRESA D'ARIA LAT.POST.D	PRISE D'AIR	LUFTEINTRITT	AIR INTAKE	BOCA DE AIRE
	4245639	L127	1	PRESA D'ARIA LAT.POST.S	PRISE D'AIR	LUFTEINTRITT	AIR INTAKE	BOCA DE AIRE
	4245644	L109	1	PANNELLO INT.D COMPL. -COLORE NERO	PANNEAU -NOIR	VERKLEIDUNG -SCHWARZ	PANEL -BLACK	CONTRAPANEL -NEGRO
	4245645	L109	1	PANNELLO INT.S COMPL. -COLORE NERO	PANNEAU -NOIR	VERKLEIDUNG -SCHWARZ	PANEL -BLACK	CONTRAPANEL -NEGRO
	4245649	L109	1	PROFILATO SUP.D	PROFILE	PROFIL	CHANNEL	PERFIL

MODIF.	N.ORDINAZ.	SGR.	Q.	DENOMINAZIONE	DESIGNATION	BENENNUNG	DESCRIPTION	DENOMINACIONES
				-PER PORTA	-POUR PORTE	-FUER TUER	-FOR DOOR	-PARA PUERTA
	4245650	L109	1	PROFILATO SUP.S	PROFILE	PROFIL	CHANNEL	PERFIL
				-PER PORTA	-POUR PORTE	-FUER TUER	-FOR DOOR	-PARA PUERTA
	4245651	L109	1	MOSTRINA D	MOTIF	ZIERSTUECK	ORNAMENT	EMBELLECEDOR
	4245652	L109	1	MOSTRINA S	MOTIF	ZIERSTUECK	ORNAMENT	EMBELLECEDOR
ERA	4245655	L109		VED. 4308248				
	4245656	L109	2	PROFILATO DI GOMMA	PROFILE CAOUTCHOUC	PROFILGUMMI	RUBBER WEATHER STRIP	PERFIL DE GOMA
				-PER CRISTALLO	-POUR GLACE	-FUER GLASSCHEIBE	-FOR GLASS PANE	-PARA CRISTAL
	4245657	L109	2	PROFILATO DI GOMMA CENTR.	PROFILE CAOUTCHOUC	PROFILGUMMI	RUBBER WEATHER STRIP	PERFIL DE GOMA
				-PER MONTANTE	-POUR MONTANT	-FUER SAULE	-FOR PILLAR	-PARA MONTANTE
	4245658	L109	2	PROFILATO DI GOMMA POST.	PROFILE CAOUTCHOUC	PROFILGUMMI	RUBBER WEATHER STRIP	PERFIL DE GOMA
	4245691	L104	1	STAFFA D	ETRIER	HALTER	BRACKET	SOPORTE
	4245692	L104	1	STAFFA S	ETRIER	HALTER	BRACKET	SOPORTE
	4245695	L104	1	PARETE ANT.D	MANDI	WAND	WALL	TABIQUE
	4245696	L104		PARETE ANT.S	MANDI	WAND	WALL	TABIQUE
	4245696	L104		ERA 4308188				
	4245702	L104	1	ELEMENTO COLLEGAMENTO SUP.ANT.D	ELEMENT DE LIAISON	VERBINDUNGSTEIL	JOINING ELEMENT	ELEMENTO DE UNION
	4245703	L104	1	ELEMENTO COLLEGAMENTO SUP.ANT.S	ELEMENT DE LIAISON	VERBINDUNGSTEIL	JOINING ELEMENT	ELEMENTO DE UNION
	4245706	L104	1	COPERCHIO D	COUVERCLE	DECKEL	COVER	TAPA
	4245707	L104	1	COPERCHIO S	COUVERCLE	DECKEL	COVER	TAPA
	4245711	L105	1	CANALINO ANT.CENTR.SUP.	PROFILE	SCHIENE	CHANNEL	CANAL
	4245712	L105	1	CANALINO LAT.ANT.D	PROFILE	SCHIENE	CHANNEL	CANAL
				PER COFANO	-POUR CAPOT	-FUER MOTORHAUBE	-FOR HOOD	-PARA CAPOT
	4245713	L105	1	CANALINO LAT.ANT.S	PROFILE	SCHIENE	CHANNEL	CANAL
				-PER COFANO	-POUR CAPOT	-FUER MOTORHAUBE	-FOR HOOD	-PARA CAPOT
	4245720	M107	1	PORTA ENERE SU TUNNEL (19741)	LENDRIER	ASCHENBECHER	ASH RECEIVER	CENICERO
	4245721	L125	1	STAFFA INT.D	ETRIER	HALTER	BRACKET	SOPORTE
	4245722	L125	1	STAFFA INT.S	ETRIER	HALTER	BRACKET	SOPORTE
	4245725	L125	1	STAFFA EST.D	ETRIER	HALTER	BRACKET	SOPORTE
	4245726	L125	1	STAFFA EST.S	ETRIER	HALTER	BRACKET	SOPORTE
	4245735	L125	4	BOCCOLA	DOUILLE	BUECHSE	BUSH	CASQUILLO
	4245736	L125	4	DISTANZIALE	ENTRETOISE	ABSTANDSTUECK	SPACER	SEPARADOR
	4245737	L125	4	VITE	VIS	SCHRAUBE	SCREW	TORNILLO
	4245742	L127	1	GRIGLIA LAT.POST.D	GRILLE	GITTER	GRILLE	REJILLA
	4245743	L127	1	GRIGLIA LAT.POST.S	GRILLE	GITTER	GRILLE	REJILLA
	4245744	L127	4	PERNO DI FISSAGGIO	CHEVILLE	BOLZEN	PIN	PASADOR
	4245756	L103	1	LONGHERONE CENTR.D	LONGERON	LAENGSTRAEGER	SIDE MEMBER	LARGUERO
	4245757	L103	1	LONGHERONE CENTR.S	LONGERON	LAENGSTRAEGER	SIDE MEMBER	LARGUERO
	4245758	L127	1	GRIGLIA LAT.ANT.D	GRILLE	GITTER	GRILLE	REJILLA

MODIF.	N.ORDINAZ.	SGR.	Q.	DENOMINAZIONE	DESIGNATION	BENENNUNG	DESCRIPTION	DENOMINACIONES
	4249749	L127	1	GRIGLIA LAT.ANT.S.	GRILLE	GITTER	GRILLE	REJILLA
C 5317	4245782	L125	1	MODANATURA EST.D SUP.LAT.ROLL-B	MOULURE	ZIERLEISTE	MOULDING	MOLDURA
C 5317	4245783	L125	1	MODANATURA EST.S SUP.LAT.ROLL-B	MOULURE	ZIERLEISTE	MOULDING	MOLDURA
C 5317	4245784	L125	1	COPRIGIUNTO ROLL-BAR	COUVRE-JOINT	LASCHE	FISHPLATE	CUBREJUNTAS
	4245785	L125	30	MOLLETTA	AGRAFE	KLEMMSTUECK	CLIP	SUJETADOR
	4245786	L302	1	SCODELLINO	CUVETTE	TELLERSCHEIBE	CUP	PLATILLO
ERA	4245787	L302						
	4245788	L302	1	GUARNIZIONE	GARNITURE	UNTERLAGE	LINING	FORRO
	4245815	L125	4	GUARNIZIONE LAT.ANT.	REVETEMENT	VERKLEIDUNG	COVERING	FORRO
ERA	4245817	L301		VED 4246304				
	4245843	L102	1	PLANCIA LAT.	PLANCHE	WAND	PANEL	TABLERO
	4245848	L102	1	CERNIERA (1974)	CHARNIERE	SCHARNIER	HINGE	BISAGRA
ERA	4245851	L102						
	4245852	L102	2	TASSELLO ELASTICO	TAMPON	GUMMISTUECK	PAD	ALMOHADILLA
	4245855	L302	4	TASSELLO ELASTICO	TAMPON	GUMMISTUECK	PAD	ALMOHADILLA
	4245856	L302	4	TASSELLO ELASTICO	TAMPON	GUMMISTUECK	PAD	ALMOHADILLA
ERA	4245857	L302		VED 4391241				
	4245863	L102	1	PLANCIA PORTASTRUMENTI (1974)	PLANCHE DE BORD	INSTRUMENTENBRETT	INSTRUMENT PANEL	TABLERO DE INSTRUMENTOS
ERA	4245869	L102		VED 975942				
	4249878	L102	1	ROSETTA	RONDELLE	SCHEIBE	WASHER	ARANDELA
	4245[illegible]	L125	1	GUAINA FLESSIBILE ANT.COMPL.	GAINE	HUELLE	SHEATH	FUNDA
	4245889	L121	1	FILO DI ACCIAIO ANT.	FIL D'ACIER	STAHLDRAHT	STEEL WIRE	ALAMBRE DE ACERO
ERA	4245929	M107		VED 4116766				
	4245935	M107	1	CINGHIA INF.	SANGLE	HALTERIEMEN	STRAP	CORREA
	4245952	L108	4	TASSELLO ELASTICO POST.	TAMPON	GUMMISTUECK	PAD	ALMOHADILLA
	4245958	L108	4	PERNO	AXE	BOLZEN	PIN	EJE
	4245964	L108		TETTO RIGIDO	HARD-TOP	HARD TOP	HARD TOP	TECHO DURO
ERA	4245973	L108		VED 4308243				
ERA	4245973	L108		VED 4308244				
	4245974	L108	2	SCONTRINO ANT.	GACHE	GESPERRE	STRIKER PLATE	CERRADERO
	4245982	L108	2	SCONTRINO POST.	GACHE	GESPERRE	STRIKER PLATE	CERRADERO
	4245983	L108	1	PROFILATO DI GOMMA ANT	PROFILE CAOUTCHOUC	PROFILGUMMI	RUBBER WEATHER STRIP	PERFIL DE GOMA
	4245983	L108		ERA 4245984				
	4245983	L108		ERA 4245985				
ERA	4245984	L108		VED 4245983				
ERA	4245985	L108		VED 4245983				
	4245986	L108	1	ELEMENTO COLLEGAMENTO LAT.POST.D	ELEMENT DE LIAISON	VERBINDUNGSTEIL	JOINING ELEMENT	ELEMENTO DE UNION
	4245987	L108	1	ELEMENTO COLLEGAMENTO LAT.POST.S	ELEMENT DE LIAISON	VERBINDUNGSTEIL	JOINING ELEMENT	ELEMENTO DE UNION

MODIF.	N.DISEGNO	SGR.	Q.	DENOMINAZIONE	DESIGNATION	BENENNUNG	DESCRIPTION	DENOMINACIONES
	4245988	L108	2	GUARNIZIONE INF.	REVETEMENT	VERKLEIDUNG	COVERING	FORRO
ERA	4245990	L108		VED 4308248				
ERA	4245991	L108		VED				
ERA	4245992	L108		VED 4308248				
	4245993	L125	1	MODANATURA ANT.D	MOULURE	ZIERLEISTE	MOULDING	MOLDURA
	4245994	L125	1	MODANATURA ANT.S	MOULURE	ZIERLEISTE	MOULDING	MOLDURA
	4245995	L108	1	MODANATURA LAT.D	MOULURE	ZIERLEISTE	MOULDING	MOLDURA
	4245996	L108	1	MODANATURA LAT.S	MOULURE	ZIERLEISTE	MOULDING	MOLDURA
	4246009	L123	1	GUAINA FLESSIBILE POST.COMPL.	GAINE	HUELLE	SHEATH	FUNDA
	4246011	L123	1	ANELLO DI GOMMA	BAGUE CAOUTCHOUC	GUMMIRING	RUBBER RING	GUARNICION DE CAUCHO
	4246012	L127	1	GUAINA FLESSIBILE COMPL.	GAINE	HUELLE	SHEATH	FUNDA
	4246014	L127	1	FILO DI ACCIAIO	FIL D'ACIER	STAHLDRAHT	STEEL WIRE	ALAMBRE DE ACERO
	4246018	L102	1	RIPARO SUP. PER TUBO DELLO STERZO	PROTECTION POUR TUBE DE L'ARBRE DE DIRECTION	ABDECKUNG FUER LENKROHR	PROTECTION FOR STEERING COLUMN JACKET	DEFENSA PARA TUBO DE ARBOL DE DIRECCION
	4246019	L102	1	RIPARO INF. PER TUBO DELLO STERZO	PROTECTION POUR TUBE DE L'ARBRE DE DIRECTION	ABDECKUNG FUER LENKROHR	PROTECTION FOR STEERING COLUMN JACKET	DEFENSA PARA TUBO DE ARBOL DE DIRECCION
	4246020	L123	1	FILO DI ACCIAIO POST.	FIL D'ACIER	STAHLDRAHT	STEEL WIRE	ALAMBRE DE ACERO
	4246030	L103	1	PAVIMENTO POST.(1974)	PLANCHER	BODENBLECH	FLOOR PAN	PISO
	4246055	M107	1	SPECCHIO RETROVISORE INT.	RETROVISEUR	RUECKBLICKSPIEGEL	REAR VIEW MIRROR	ESPEJO RETROVISOR
	4246056	M108	1	RIVESTIMENTO COLORE NERO	REVETEMENT NOIR	VERKLEIDUNG SCHWARZ	COVERING BLACK	FORRO NEGRO
	4246060	L123	1	SERRATURA ANT.	SERRURE	SCHLOSS	LOCK	CERRADURA
	4246109	L127	1	FONDELLO	CULOT	BODENTELLER	END PLATE	TAPON
	4246110	L103	1	TRAVERSA POST.	TRAVERSE	TRAVERSE	CROSSRAIL	TRAVESANO
	4246170	L125	2	MANICOTTO	MANCHON	SPANNSCHLOSS	SLEEVE	TUERCA
	4246172	L123	2	TASSELLO ELASTICO	TAMPON	GUMMISTUECK	PAD	ALMOHADILLA
	4246172	L125	2	TASSELLO ELASTICO	TAMPON	GUMMISTUECK	PAD	ALMOHADILLA
	4246172	L127	2	TASSELLO ELASTICO	TAMPON	GUMMISTUECK	PAD	ALMOHADILLA
	4246173	L104	1	OSSATURA LAT.D	OSSATURE	RAHMENWERK	FRAMING	ARMAZON
	4246174	L104	1	OSSATURA LAT.S	OSSATURE	RAHMENWERK	FRAMING	ARMAZON
	4246181	L108	1	SUPPORTO D ANT.	SUPPORT	LAGER	SUPPORT	SOPORTE
	4246182	L108	1	SUPPORTO S ANT.	SUPPORT	LAGER	SUPPORT	SOPORTE
	4246192	L105	1	RIVESTIMENTO EST.SUP.ROLL-BAR	REVETEMENT	VERKLEIDUNG	PANEL	PANEL
	4246198	L109	1	CAPPUCCIO POST.D	CAPUCHON	SCHUTZKAPPE	BOOT	CAPUCHON
	4246215	L102	1	GUARNIZIONE	GARNITURE	UNTERLAGE	LINING	FORRO
	4246216	L109	1	CAPPUCCIO POST.S	CAPUCHON	SCHUTZKAPPE	BOOT	CAPUCHON
	4246256	L109	20	MOLLETTA	AGRAFE	KLEMMSTUECK	CLIP	SUJETADOR
	4246260	L123	1	SUPPORTO ANT.	SUPPORT	LAGER	SUPPORT	SOPORTE
	4246268	L105	1	RIVESTIMENTO ANT.INF.LAT.D (1974)	REVETEMENT	VERKLEIDUNG	PANEL	PANEL

MODIF.	N.ORDINAZ.	SGR.	Q.	DENOMINAZIONE	DESIGNATION	BENENNUNG	DESCRIPTION	DENOMINACIONES
	4246269	L107	1	RIVESTIMENTO ANT.INF.LAT.S (1974)	REVETEMENT	VERKLEIDUNG	PANEL	PANEL
ERA	4246271	L105		VED 4325743				
ERA	4246273	L104						
	4246288	L129	2	MOSTRINA	MOTIF	ZIERSTUECK	ORNAMENT	EMBELLECEDOR
	4246298	L100	1	TASSELLO ELASTICO ANT.D	TAMPON	GUMMISTUECK	PAD	ALMOHADILLA
	4246299	L108	1	TASSELLO ELASTICO ANT.S	TAMPON	GUMMISTUECK	PAD	ALMOHADILLA
	4246300	L106	2	GANCIO LAT.	CROCHET	HAKEN	HOOK	GANCHO
	4246303	L102	5	VITE	VIS	SCHRAUBE	SCREW	TORNILLO
	4246304	L302	2	BOTTONE DI GOMMA	BOUTON CAOUTCHOUC	GUMMIKNOPFEN	RUBBER STUD	PITON DE CAUCHO
	4246306	L301	1	GRIGLIA DEL RADIATORE (1974)	GRILLE DE RADIATEUR	KUEHLERGITTER	RADIATOR GRILLE	CORAZA DEL RADIADOR
	4246306	L301		ERA 4245817				
	4246309	L125	1	SEDE DEL FARO D	SIEGE DE PHARE	SCHEINWERFERSITZ	HEADLAMP SEAT	CORAZA DE FARO
	4246310	L125	1	SEDE DEL FARO S	SIEGE DE PHARE	SCHEINWERFERSITZ	HEADLAMP SEAT	CORAZA DE FARO
	4246313	L125	1	CORNICE DEL PROIETTORE D	MONTURE DE PROJECTEUR	LEUCHTENRING	HEADLAMP RIM	MARCO DE PROYECTOR
	4246314	L125	1	CORNICE DEL PROIETTORE S	MONTURE DE PROJECTEUR	LEUCHTENRING	HEADLAMP RIM	MARCO DE PROYECTOR
	4246315	L129	2	PERNO	AXE	BOLZEN	PIN	EJE
	4246317	L102	8	VITE	VIS	SCHRAUBE	SCREW	TORNILLO
	4246319	L302	1	GUARNIZIONE	GARNITURE	UNTERLAGE	LINING	FORRO
	4246321	L103	1	SUPPORTO D	SUPPORT	LAGER	SUPPORT	SOPORTE
	4246322	L103	1	SUPPORTO S	SUPPORT	LAGER	SUPPORT	SOPORTE
	4246347	L125	1	MOSTRINA D	MOTIF	ZIERSTUECK	ORNAMENT	EMBELLECEDOR
	4246348	L125	1	MOSTRINA S	MOTIF	ZIERSTUECK	ORNAMENT	EMBELLECEDOR
	4246357	L123	1	FORCELLA	FOURCHE	GABEL	FORK	HORQUILLA
	4246359	L109	2	BATTICALCAGNO	BAVOLET	FUSSLEISTE	DOORSILL MOULDING	MOLDURA
	4246360	M107	1	GUARNIZIONE ANT.INF.D	REVETEMENT	VERKLEIDUNG	COVERING	FORRO
	4246373	L104	1	RINFORZO ROLL-BAR POST.D	RENFORT	VERSTAERKUNG	REINFORCEMENT	REFUERZO
	4246374	L104	1	RINFORZO ROLL-BAR POST.S	RENFORT	VERSTAERKUNG	REINFORCEMENT	REFUERZO
	4246389	L302	1	GUARNIZIONE	GARNITURE	UNTERLAGE	LINING	FORRO
	4246393	M107	2	MOSTRINA INT.	MOTIF	ZIERSTUECK	ORNAMENT	EMBELLECEDOR
C 5149	4246398	L109	1	RINVIO A LEVA D	RENVOI A LEVIER	ZWISCHENBETAETIGUNG	IDLE LEVER	REENVIO DE PALANCA
C 5149	4246399	L109	1	RINVIO A LEVA S	RENVOI A LEVIER	ZWISCHENBETAETIGUNG	IDLE LEVER	REENVIO DE PALANCA
	4246400	M107	1	RIVESTIMENTO POST.	REVETEMENT	VERKLEIDUNG	COVERING	FORRO
	4246402	L123	1	ASTA ANT.	TIGE	STANGE	ROD	VARILLA
	4246406	L123	1	SUPPORTO	SUPPORT	LAGER	SUPPORT	SOPORTE
	4246407	L123	1	MOLLA	RESSORT	FEDER	SPRING	RESORTE
	4246493	L125	1	PROFILATO DI GOMMA POST.	PROFILE CAOUTCHOUC	PROFILGUMMI	RUBBER WEATHER-STRIP	PERFIL DE GOMA

MODIFI.	N. ORDINAZ.	SGR.	Q.	DENOMINAZIONE	DESIGNATION	BENENNUNG	DESCRIPTION	DENOMINACIONES
	4246498	L125	1	MODANATURA POST. -PER SPORTELLO	MOULURE -POUR VOLET	ZIERLEISTE -FUER DECKEL	MOULDING -FOR LID	MOLDURA -PARA TAPA
	4246499	L125	1	MODANATURA LAT.POST.S	MOULURE	ZIERLEISTE	MOULDING	MOLDURA
	4246500	L125	1	MODANATURA LAT.POST.D	MOULURE	ZIERLEISTE	MOULDING	MOLDURA
	4246501	L125	1	MODANATURA CENTR.POST.	MOULURE	ZIERLEISTE	MOULDING	MOLDURA
	4246515	L127	1	CONVOGLIATORE LAT.INT.D	CONVOYEUR	LEITBLECH	CONVEYOR	CANALIZADOR
	4246516	L127	1	CONVOGLIATORE LAT.INT.S	CONVOYEUR	LEITBLECH	CONVEYOR	CANALIZADOR
	4246577	M106	1	TAPPETO INT. -COLORE ROSSO	TAPIS -ROUGE	BELAG -ROTE	MAT -RED	ALFOMBRA -ROJO
	4246582	M104	1	TAPPETO ANT. -PER VANO BAGAGLI	TAPIS -POUR COFFRE	BELAG -FUER KOFFERRAUM	MAT -FOR LUGGAGE COMPARTMENT	ALFOMBRA -PARA BAUL
	4246583	M104	1	TAPPETO POST. -PER VANO BAGAGLI	TAPIS -POUR COFFRE	BELAG -FUER KOFFERRAUM	MAT -FOR LUGGAGE COMPARTMENT	ALFOMBRA -PARA BAUL
	4246628	L125	4	MOLLETTA	AGRAFE	KLEMMSTUECK	CLIP	SUJETADOR
	4246637	L125	2	TIRANTE D	TIRANT	SPANNBOLZEN	TIERRO	PERNO
	4246638	L125	2	TIRANTE S	TIRANT	SPANNBOLZEN	TIERRO	PERNO
	4246640	L109	2	CARRUCOLA	POULIE	SEILROLLE	SHEAVE	RODDANA
	4246649	M107	1	RIVESTIMENTO -COLORE NERO	REVETEMENT -NOIR	VERKLEIDUNG -SCHWARZ	COVERING -BLACK	FORRO -NEGRO
D 5235	4286249	M108	1	GHIERA	ECROU	GEWINDERING	THREADED RING	TUERCA
	4290145	L102	1	GRIGLIA	GRILLE	GITTER	GRILLE	REJILLA
C 5235	4290679	M108	1	CINGHIA	SANGLE	HALTERIEMEN	STRAP	CORREA
	4307787	M107	1	ISOLAMENTO	ISOLANT	ISOLIERUNG	LINING	FORRO
	4307788	M107	1	RIVESTIMENTO	REVETEMENT	VERKLEIDUNG	COVERING	FORRO
	4307789	L125	1	SIGLA DEL MODELLO XI 9	MOTIF	MODELLZEICHEN	TYPE PLATE	EMBLEMA
	4307792	M106	1	PROFILATO	PROFILE	PROFIL	CHANNEL	PERFIL
	4307793	M101	1	APPOGGIABRACCIA D	ACCOUDOIR	ARMLEHNE	ARMREST	APOYABRAZOS
	4307794	M101	1	APPOGGIABRACCIA S	ACCOUDOIR	ARMLEHNE	ARMREST	APOYABRAZOS
	4307798	L108	1	DENTE POST.D	DENT	KLAUE	LUG	DIENTE
	4307799	L108	1	DENTE POST.S	DENT	KLAUE	LUG	DIENTE
	4307802	L102	2	PERNO (1974)	AXE	BOLZEN	PIN	EJE
	4307805	L102	1	PUNTELLO D (1974)	BEQUILLE	STREBE	STAY	PUNTAL
	4307804	L102	1	PUNTELLO S (1974)	BEQUILLE	STREBE	STAY	PUNTAL
	4307810	L120	1	CRISTALLO (26)	GLACE	GLASSCHEIBE	GLASS	CRISTAL
	4307816	L120	1	CRISTALLO ATERMICO (26-30)	GLACE ATHERMIQUE	FARBGLASS	TINTED GLASS PANE	CRISTAL ATERMICO
	4307817	L118	1	CRISTALLO	GLACE	GLASSCHEIBE	GLASS	CRISTAL
	4307818	L109	1	CRISTALLO ATERMICO D (30)	GLACE ATHERMIQUE	FARBGLASS	TINTED GLASS PANE	CRISTAL ATERMICO
	4307819	L109	1	CRISTALLO ATERMICO S (30)	GLACE ATHERMIQUE	FARBGLASS	TINTED GLASS PANE	CRISTAL ATERMICO
	4307820	L109	1	CRISTALLO ATERMICO D (30)	GLACE ATHERMIQUE	FARBGLASS	TINTED GLASS PANE	CRISTAL ATERMICO

MODIF.	N.ORDINAZ.	SGR.	Q.	DENOMINAZIONE	DESIGNATION	BENENNUNG	DESCRIPTION	DENOMINACIONES
	4307821	L109	1	CRISTALLO ATERMICO S (3D)	GLACE ATHERMIQUE	FARBGLASS	TINTED GLASS PANE	CRISTAL ATERMICO
	4307822	L120	1	CRISTALLO ATERMICO (3D)	GLACE ATHERMIQUE	FARBGLASS	TINTED GLASS PANE	CRISTAL ATERMICO
	4307826	L127	1	ISOLAMENTO	ISOLANT	ISOLIERUNG	LINING	FORRO
	4307831	L102	9	MOLLETTA	AGRAFE	KLEMMSTUECK	CLIP	SOJETADOR
	4307831	L304	2	MOLLETTA	AGRAFE	KLEMMSTUECK	CLIP	SOJETADOR
	4307831	L307	2	MOLLETTA	AGRAFE	KLEMMSTUECK	CLIP	SOJETADOR
	4307851	L125	1	GUARNIZIONE INF.ANT.D	REVETEMENT	VERKLEIDUNG	COVERING	FORRO
	4307852	L125	1	GUARNIZIONE INF.ANT.S	REVETEMENT	VERKLEIDUNG	COVERING	FORRO
	4307853	L125	2	STAFFA INF.ANT.	ETRIER	HALTER	BRACKET	SOPORTE
	4307855	L104	1	PARASASSI D	CHASSE-PIERRES	STEINSCHLAG-SCHUETZER	STONEGUARD	GUARDAPIEDRAS
	4307856	L104	1	PARASASSI S	CHASSE-PIERRES	STEINSCHLAG-SCHUETZER	STONEGUARD	GUARDAPIEDRAS
	4307860	L123	1	FILO DI ACCIAIO	FIL D'ACIER	STAHLDRAHT	STEEL WIRE	ALAMBRE DE ACERO
	4307861	L109	1	CANALINO D	PROFILE	SCHIENE	CHANNEL	CANAL
	4307862	L109	1	CANALINO S	PROFILE	SCHIENE	CHANNEL	CANAL
	4307863	L109	6	VITE	VIS	SCHRAUBE	SCREW	TORNILLO
	4307864	L123	1	DISTANZIALE POST.	ENTRETOISE	ABSTANDSTUECK	SPACER	SEPARADOR
	4307871	L102	1	CONDOTTO ARIA D	CONDUIT D'AIR	LUFTLEITUNG	AIR DUCTING	CONDUCTO DE AIRE
	4307872	L102	1	CONDOTTO ARIA S	CONDUIT D'AIR	LUFTLEITUNG	AIR DUCTING	CONDUCTO DE AIRE
	4307875	L109	2	PROFILATO DI GOMMA INF.	PROFILE CAOUTCHOUC	PROFILGUMMI	RUBBER WEATHER-STRIP	PERFIL DE GOMA
	4307877	L123	1	SPORTELLO POST. ORP.	VOLET	DECKEL	LID	TAPA
	4307879	L123	1	SPORTELLO ANT.	VOLET	DECKEL	LID	TAPA
	4307880	L127	1	SPORTELLO -PER VANO MOTORE	VOLET DE REMPLACEMENT DE MOTEUR	-FUER MOTORRAUM	-FOR ENGINE COMPARTMENT	TAPA -DE CAPOT
ERA	4307881	L108		VED. 13309301				
ERA	4307882	L108		VED. 13297302				
	4307885	L123	M	PROFILATO DI GOMMA POST. -PER SPORTELLO	PROFILE CAOUTCHOUC -POUR VOLET	PROFILGUMMI -FUER DECKEL	RUBBER WEATHER-STRIP -FOR LID	PERFIL DE GOMA -PARA TAPA
	4307885	L123		ERA 4245594				
	4307892	L104	1	VITE	VIS	SCHRAUBE	SCREW	TORNILLO
ERA	4307898	L108		VED. 13310801				
	4307901	L123	1	PONTELLO POST. -PER SPORTELLO	BEQUILLE -POUR VOLET	STREBE -FUER DECKEL	STAY -FOR LID	PUNTAL -PARA TAPA
	4307902	M106	1	TAPPETO -COLORE MARRONE	TAPIS -MARRON	BELAG -BRAUN	MAT -BROWN	ALFOMBRA -PARDO
	4307909	M101	2	FODERA -PER SCHIENALE -COLORE ARANCIO	HOUSSE -POUR DOSSIER -ORANGE	UEBERZUG -FUER RUECKLEHNE -ORANGE-FARBEN	COVERING -FOR SEAT BACK -ORANGE	FORRO -PARA RESPALDO -NARANJA
	4307910	M101	2	FODERA -PER SCHIENALE	HOUSSE -POUR DOSSIER	UEBERZUG -FUER RUECKLEHNE	COVERING -FOR SEAT BACK	FORRO -PARA RESPALDO

MASTER INDEX

GROUP	GRID
L BODY EXTERIORS	A-1
M BODY INTERIORS	D-1
PARTS LISTS	E-1
ADDITIONAL	E-12 L
ORDERING PARTS	F-2
USE OF CATALOG	F-3/F-7
ENGLISH	F-6
DAT CODES	F-8
ABBREVIATIONS	F-9
VERSION	F-10
MODIFICATION	F-11
PAINT LIST, U.S.A.	F-2/F-4 LOWER
ACCESSORIES, U.S.A.	F-5 LOWER
ACCESSORIES, CANADA	F-6 LOWER

PARTS LIST

PART NUMBER	GRID
4307911	E-2
4308010	E-3
4308248	E-4
4325861	E-5
4325714	E-6
4325944	E-7
10516471	E-8
10979421	E-9
12644401	E-10
15896411	E-11
4325812	E-12
4326087	E-13

MODIF.	N.ORDINAZ.	SGR.	Q.	DENOMINAZIONE	DESIGNATION	BENENNUNG	DESCRIPTION	DENOMINACIONES
				-COLORE BEIGE	-BEIGE	-BEIGE	-BEIGE	-BEIGE
	4307911	M101	2	FODERA	MOUSSE	UEBERZUG	COVERING	FORRO
				-PER SCHIENALE	-POUR DOSSIER	-FUER RUECKLEHNE	-FOR SEAT BACK	-PARA RESPALDO
				-COLORE NERO	-NOIR	-SCHWARZ	-BLACK	-NEGRO
	4307912	M101	2	FODERA	MOUSSE	UEBERZUG	COVERING	FORRO
				-PER CUSCINO	-POUR COUSSIN	-FUER SITZPOLSTER	-FOR CUSHION	-PARA ASIENTO
				-COLORE ARANCIO	-ORANGE	-ORANGE-FARBEN	-ORANGE	-NARANJA
	4307913	M101	2	FODERA	MOUSSE	UEBERZUG	COVERING	FORRO
				-PER CUSCINO	-POUR COUSSIN	-FUER SITZPOLSTER	-FOR CUSHION	-PARA ASIENTO
				-COLORE BEIGE	-BEIGE	-BEIGE	-BEIGE	-BEIGE
	4307914	M101	2	FODERA	MOUSSE	UEBERZUG	COVERING	FORRO
				-PER CUSCINO	-POUR COUSSIN	-FUER SITZPOLSTER	-FOR CUSHION	-PARA ASIENTO
				-COLORE NERO	-NOIR	-SCHWARZ	-BLACK	-NEGRO
	4307916	L109	1	PANNELLO D	PANNEAU	VERKLEIDUNG	PANEL	CONTRAPANEL
				-COLORE BEIGE	-BEIGE	-BEIGE	-BEIGE	-BEIGE
	4307917	L109	1	PANNELLO S	PANNEAU	VERKLEIDUNG	PANEL	CONTRAPANEL
				-COLORE BEIGE	-BEIGE	-BEIGE	-BEIGE	-BEIGE
	4307918	L109	1	PANNELLO D	PANNEAU	VERKLEIDUNG	PANEL	CONTRAPANEL
				-COLORE ARANCIO	-ORANGE	-ORANGE-FARBEN	-ORANGE	-NARANJA
	4307919	L109	1	PANNELLO S	PANNEAU	VERKLEIDUNG	PANEL	CONTRAPANEL
				-COLORE ARANCIO	-ORANGE	-ORANGE-FARBEN	-ORANGE	-NARANJA
	4307920	M108	1	RIVESTIMENTO	REVETEMENT	VERKLEIDUNG	COVERING	FORRO
				-COLORE BEIGE	-BEIGE	-BEIGE	-BEIGE	-BEIGE
	4307921	M108	1	RIVESTIMENTO	REVETEMENT	VERKLEIDUNG	COVERING	FORRO
				-COLORE ARANCIO	-ORANGE	-ORANGE-FARBEN	-ORANGE	-NARANJA
	4307922	M107	1	RIVESTIMENTO	REVETEMENT	VERKLEIDUNG	COVERING	FORRO
				-COLORE BEIGE	-BEIGE	-BEIGE	-BEIGE	-BEIGE
	4307923	M107	1	RIVESTIMENTO	REVETEMENT	VERKLEIDUNG	COVERING	FORRO
				-COLORE ARANCIO	-ORANGE	-ORANGE-FARBEN	-ORANGE	-NARANJA
	4307928	M101	2	ASTA	TIGE	STANGE	ROD	VARILLA
	4307931	L125	1	GUARNIZIONE	GARNITURE	UNTERLAGE	LINING	FORRO
	4307932	M101	2	GANCIO	CROCHET	HAKEN	HOOK	GANCHO
	4307947	L123	1	DISPOSITIVO CHIUSURA POST.	VERROU	RIEGEL	LOCK	PESTILLO
	4307947	L127	1	DISPOSITIVO CHIUSURA	VERROU	RIEGEL	LOCK	PESTILLO
	4307950	L104	1	FIANCATA INT.POST.S	COTE DE COUPE	SEITENWAND	SIDE PANEL	COSTADO
	4307955	M107	1	RIVESTIMENTO TUNNEL (1974)	REVETEMENT	VERKLEIDUNG	COVERING	FORRO
	4307962	L104	1	PASSARUOTA POST.EST.D	PASSE-ROUE	RADKASTENBLECH	WHEELBOX	CAVIDAD DE RUEDA
	4307963	L104	1	PASSARUOTA POST.EST.S	PASSE-ROUE	RADKASTENBLECH	WHEELBOX	CAVIDAD DE RUEDA
	4307965	L118	2	COPRIGIUNTO EST.	COUVRE-JOINT	LASCHE	FISHPLATE	CUBREJUNTAS
	4307972	L104	1	PARETE (1975)	PANOIA	WAND	WALL	TABIQUE
	4307991	L108	1	TASSELLO LAT.D	TAMPON	BELAGE	PAD	TACO
	4307992	L108	1	TASSELLO LAT.S	TAMPON	BELAGE	PAD	TACO
	4308009	L306	1	LAMA DEL PARAURTI LAT.D (1974)	LAME PARE-CHOCS	STOSSFAENGER	BUMPER BAR	PARACHOQUES

MODEL	N.ORDINAZ.	SIP.	Q.	DENOMINAZIONE	DESIGNATION	BENENNUNG	DESCRIPTION	DENOMINACIONES
	4308010	L109	1	LAMA DEL PARAURTI (AT.S (1974)	LAME PARE-CHOCS	STOSSFAENGER	BUMPER BAR	PARACHOQUES
	4308070	L109	1	PORTA D	PORTE	TUER	DOOR	PUERTA
	4308071	L109	1	PORTA S	PORTE	TUER	DOOR	PUERTA
	4308076	L104	1	PARETE	PARDI	WAND	WALL	TABIQUE
	4308092	R107	1	RIVESTIMENTO (AT.POST.D COLORE NERO	REVETEMENT NOIR	VERKLEIDUNG SCHWARZ	COVERING BLACK	FORRO NEGRO
	4308093	R107	1	RIVESTIMENTO (AT.POST.S COLORE NERO	REVETEMENT NOIR	VERKLEIDUNG SCHWARZ	COVERING BLACK	FORRO NEGRO
	4308105	R107	1	CONSOLLE (1974)	CONSOLE	KONSOLE	CONSOLE	CONSOLA
	4308110	L120	1	PROFILATO	PROFILE	PROFIL	CHANNEL	PERFIL
	4308114	L104	1	SCATOLA ARE	CARTER	GEHAUSE	CASE	CAJA
	4308117	R107	1	RIPARO SOLE S.COMPL. FRA 4203-309	PARE-SOLEIL	SONNENBLENDE	SUN VISOR	PARASOL
	4308118	R107	1	RIPARO SOLE D COMPL. FRA 4206-310	PARE-SOLEIL	SONNENBLENDE	SUN VISOR	PARASOL
	4308119	R107	1	RIPARO	PROTECTION	ABDECKUNG	PROTECTION	DEFENSA
	4308127	L106	1	RINFORZO ANT.D	RENFORT	VERSTAERKUNG	REINFORCEMENT	REFUERZO
	4308128	L106	1	RINFORZO ANT.S	RENFORT	VERSTAERKUNG	REINFORCEMENT	REFUERZO
	4308131	R107	2	SUPPORTO	SUPPORT	LAGER	SUPPORT	SOPORTE
	4308138	R107	1	SUPPORTO	SUPPORT	LAGER	SUPPORT	SOPORTE
D 5317	4308148	L125	1	MODANATURA (AT.) POST.D	MOULURE	ZIERLEISTE	MOULDING	MOLDURA
D 5317	4308149	L125	1	MODANATURA (AT.) POST.S	MOULURE	ZIERLEISTE	MOULDING	MOLDURA
	4308153	L125	1	SEDE DEL FARO D	SIEGE DE PHARE	SCHEINWERFERSITZ	SEAT LAMP BEAM	ASIENTO DE FARO
	4308154	L125	1	SEDE DEL FARO S	SIEGE DE PHARE	SCHEINWERFERSITZ	SEAT LAMP BEAM	ASIENTO DE FARO
D 5317	4308174	L125	1	PRIMER (INTO) - [illegible]	SOUVERAIN	ANTRIEB	FIRSTBEATER	CUBRE DINTAS
	4308175	L102	1	FIR[illegible]	[illegible]	GABEL	FIRE	[illegible]
	4308176	L102	1	CORPO	CORPS	GEHAUSE	BODY	CUERPO
	4308179	L102	1	ANTENNA (AT.POST.D	ANTENNE	ANTENNE	ANTENNA	ANTENA
ERA	4308188	L104	1	FVD 4295-308				
	4308189	L105	1	ELEMENTO RINFORZO POST.S PER VANO PORTA	ELEMENT DE RENFORT	VERSTEIFUNGSELEMENT	STIFFENING ELEMENT	ELEMENTO DE REFUERZO
	4308188	L105		FRA 4295-308				
	4308224	L127	2	PARETE (AT.POST.D	WANDE	WAND	WALL	TABIQUE
	4308243	L108	2	DISPOSITIVO MOLLA ANT.D	VERROU	SCHLOSS	LOCK	CERROJO
	4308243	L108		FRA 4295-373				
	4308244	L108	1	DISPOSITIVO MOLLA ANT.S	VERROU	SCHLOSS	LOCK	CERROJO
	4308244	L108		FRA 4295-373				
	4308245	L127	1	PARETE (AT.POST.S	WANDE	WAND	WALL	TABIQUE

MODIF. N. ORDINAZ.	CODI	DENOMINAZIONE	[illegible]	PENSANTE	[illegible]	DENOMINAZIONE
4308248	1108	PROFILATO DI SUMMA	[illegible]	PROFILO SUMMA	ARCHITRAVE WEATHERSTRIP	PROFILO DI SUMMA
4308248	1108	EMA 4245990				
4308248	1108	EMA 4245991				
4308248	1109	CORNICE DI SUMMA PER VANO PORTA	[illegible]	[illegible]	WEATHERSTRIP	BORDO DI SUMMA DEL PORTA
4308248	1109	EMA 4245655				
4308261	1102	MAIL	[illegible]	[illegible]		
4308264	1102	[illegible]	[illegible]	[illegible]	EVER	PALANCA
4308265	1102	[illegible]	[illegible]	[illegible]		[illegible]
4308267	1102	MOLLA	[illegible]	[illegible]	SPRING	RESORTE
4308268	1102	[illegible]	[illegible]	[illegible]	[illegible] PLATE	CERRADURA
4308279	1306	RINFORZO PIANALE	[illegible]	[illegible]	REINFORCEMENT	REFUERZO
4308280	1306	RINFORZO PIANALE	[illegible]	[illegible]	REINFORCEMENT	REFUERZO
4324081	M101	[illegible]	[illegible]	[illegible]	[illegible]	[illegible]
4324082	M101	[illegible]	[illegible]	[illegible]	[illegible]	[illegible]
4324387	M101	[illegible]	[illegible]	[illegible]	[illegible]	[illegible]
4324391	M101	[illegible]	[illegible]	[illegible]	[illegible]	[illegible]
4325670	[illegible]	[illegible]	[illegible]	[illegible]	[illegible]	[illegible]
4325671	[illegible]	[illegible]	[illegible]	[illegible]	[illegible]	[illegible]
4325672	[illegible]	[illegible]	[illegible]	[illegible]	[illegible]	[illegible]
4325673	[illegible]	[illegible]	[illegible]	[illegible]	[illegible]	[illegible]
4325674	[illegible]	[illegible]	[illegible]	[illegible]	[illegible]	[illegible]
4325677	[illegible]	[illegible]	[illegible]	[illegible]	[illegible]	[illegible]
4325680	[illegible]	[illegible]	[illegible]	[illegible]	[illegible]	[illegible]
4325681	[illegible]	[illegible]	[illegible]	[illegible]	[illegible]	[illegible]
4325691	[illegible]	[illegible]	[illegible]	[illegible]	[illegible]	[illegible]
4325692	[illegible]	[illegible]	[illegible]	[illegible]	[illegible]	[illegible]
4325694	[illegible]	[illegible]	[illegible]	[illegible]	[illegible]	[illegible]
4325694	[illegible]	[illegible]	[illegible]	[illegible]	[illegible]	[illegible]
4325695	[illegible]	[illegible]	[illegible]	[illegible]	[illegible]	[illegible]
4325698	[illegible]	[illegible]	[illegible]	[illegible]	[illegible]	[illegible]
4325699	[illegible]	[illegible]	[illegible]	[illegible]	[illegible]	[illegible]
4325700	[illegible]	[illegible]	[illegible]	[illegible]	[illegible]	[illegible]
4325701	[illegible]	[illegible]	[illegible]	[illegible]	[illegible]	[illegible]
4325710	[illegible]	[illegible]	[illegible]	[illegible]	[illegible]	[illegible]
4325711	[illegible]	[illegible]	[illegible]	[illegible]	[illegible]	[illegible]
4325711	[illegible]	[illegible]	[illegible]	[illegible]	[illegible]	[illegible]

MODIF.	N. ORDINAL		DENOMINATION	DESIGNATION	BENENNUNG	DESCRIPTION	DENOMINACIONES
	4325716	1300	[illegible]	[illegible]	[illegible]	SCREW	TORNILLO
	4325717	1300	[illegible] DEL PARAAUTE	CARRITO DE PARA[illegible]	[illegible]	BUMPER GUARD	ESCUDETE DEL PARA[illegible] CHOQUES
	4325717	1300	[illegible] DEL PARAAUTE	CARRITO DE PARA[illegible]	[illegible]	BUMPER GUARD	ESCUDETE DEL PARA CHOQUES
	4325718	1300	REINFORZ. INTERIOR	RENFORT	VERSTAERKUNG	REINFORCEMENT	REFUERZO
	4325719	1300	REINFORZ. INTERIOR	RENFORT	VERSTAERKUNG	REINFORCEMENT	REFUERZO
	4325727	[illegible]	[illegible]	[illegible]	SITZ	SEAT	BUTACA
	[illegible]		[illegible]	[illegible]	[illegible]	WASHER	[illegible]
5149	4325738	1300	[illegible]	[illegible]	[illegible]	TILE LEVER	[illegible] DE PALANCA
5149	4325739	1300	[illegible]	[illegible]	[illegible]	TILE LEVER	REEMPLAZO DE PALANCA
5149	4325740	1300	[illegible]	[illegible]	[illegible]	[illegible]	PESTILLO
	4325743	[illegible]	[illegible]	[illegible]	[illegible]	[illegible]	[illegible]
	[illegible]	[illegible]	[illegible]	[illegible]	[illegible]	[illegible]	[illegible]
	[illegible]		[illegible]	[illegible]	[illegible]	[illegible]	[illegible]
	[illegible]		[illegible]	[illegible]	[illegible]	BRACKET	[illegible]
	[illegible]		[illegible]	[illegible]	[illegible]	[illegible]	[illegible]
	[illegible]		[illegible]	[illegible]	[illegible]	[illegible]	BRIDA
	[illegible]		[illegible]	[illegible]	[illegible]	[illegible]	[illegible]

MODIF.	N.ORDINAZ.	SER.	Q.	DENOMINAZIONE	DESIGNATION	DENOMINATION	DESCRIPTION	DENOMINACIONES
				[illegible]	[illegible]	[illegible]	[illegible]	[illegible]
	4325861	13067	1	RINFORZO	[illegible]	[illegible]	[illegible]	[illegible]
	4325862	13067	1	RINFORZO	[illegible]	[illegible]	[illegible]	[illegible]
	4325864	13067	1	PUNTONE	[illegible]	[illegible]	[illegible]	TORNAPUNTA
	4325865	13067	1	PUNTONE	[illegible]	[illegible]	[illegible]	TORNAPUNTA
	4325868	1101	1	PAVIMENTO POST. (1175)	[illegible]	[illegible]	[illegible]	[illegible]
	4325869	13067	1	RINFORZO	[illegible]	[illegible]	[illegible]	[illegible]
	4325870	13067	1	RINFORZO	[illegible]	[illegible]	[illegible]	[illegible]
	4325871	1103	1	SCATOLAMENTO	[illegible]	[illegible]	[illegible]	[illegible]
				CAT. POST. (1175)				
	4325872	1103		SCATOLAMENTO	[illegible]	[illegible]	[illegible]	[illegible]
				CAT. POST. (1175)				
	4325875	1105	1	RIVESTIMENTO	[illegible]	[illegible]	[illegible]	[illegible]
				CAT. ANT. (1175)				
	4325876	1105	1	RIVESTIMENTO	[illegible]	[illegible]	[illegible]	[illegible]
				CAT. ANT.				
	4325879	1105	1	RIVESTIMENTO	[illegible]	[illegible]	[illegible]	[illegible]
				CAT. POST. (1175)				
	4325880	1105	1	RIVESTIMENTO	[illegible]	[illegible]	[illegible]	[illegible]
				CAT. POST. (1175)				
	4325881	1106		SCATOLA	[illegible]	[illegible]	[illegible]	[illegible]
				CAT. ANT. (1175)				
	4325884	1106		SCATOLA	[illegible]	[illegible]	[illegible]	[illegible]
				CAT. ANT.				
	4325887	13067	1	RINFORZO	[illegible]	[illegible]	[illegible]	[illegible]
	4325888	1106		RINFORZO	[illegible]	[illegible]	[illegible]	[illegible]
	4325891	1105	1	RIVESTIMENTO	[illegible]	[illegible]	[illegible]	[illegible]
				ANT. (1175)				
	4325892	1105	1	RIVESTIMENTO	[illegible]	[illegible]	[illegible]	[illegible]
				ANT. (1175)				
	4325895	1105	1	RIVESTIMENTO	[illegible]	[illegible]	[illegible]	[illegible]
				FRONT. ANT. (1175)				
	4325896	1105	1	RIVESTIMENTO	[illegible]	[illegible]	[illegible]	[illegible]
				POST. ENT. (1175)				
	4325897	1105	1	RIVESTIMENTO	[illegible]	[illegible]	[illegible]	[illegible]
				POST. (1175)				
	4325899	1105	1	PIASTRINA (1175)	[illegible]	[illegible]	[illegible]	[illegible]
	4325900	13067	1	AMMORTIZZATORE	[illegible]	[illegible]	[illegible]	AMORTIGUADOR
	4325907	13067	1	AMMORTIZZATORE	[illegible]	[illegible]	[illegible]	AMORTIGUADOR
	4326908	1[illegible]	1	[illegible] (1175)	[illegible]	[illegible]	[illegible]	[illegible]
	4325910	13067	1	LAMA DI PARAURTI [illegible]	[illegible]	[illegible]	[illegible]	PARACHOQUES
	4325913	13067	1	LAMA DI PARAURTI INF.	[illegible]	[illegible]	[illegible]	PARACHOQUES
	4325914	13067	1	LAMA DI PARAURTI INF.	[illegible]	[illegible]	[illegible]	PARACHOQUES
	4325915	13067	1	LAMA DI PARAURTI INF.	[illegible]	[illegible]	[illegible]	PARACHOQUES
	4325941	1107	1	[illegible]	[illegible]	[illegible]	[illegible]	[illegible]

MODIF.	N.ORDINAZ.	SGR.	Q.	DENOMINAZIONE	DESIGNATION	BENENNUNG	DESCRIPTION	DENOMINACIONES
	4325944	L3077	2	STAFFA	STRIER	HALTER	BRACKET	SOPORTE
	4325946	L104	1	SEDE DELLA BATTERIA (1975)	SIEGE DE BATTERIE	BATTERIESITZ	BATTERY SEAT	SOPORTE DE BATERIA
	4325948	L3077	1	GUARNIZIONE D	GARNITURE	DICHTEBAUE	LINING	FORRO
	4325949	L3077	1	GUARNIZIONE S	GARNITURE	DICHTEBAUE	LINING	FORRO
	4325950	L3067	2	ROSTRO DEL PARAURTI	SABOT DE PARE-CHOCS	STOSSFAENGERHORN	BUMPER HORN	ESCUDETE DEL PARA-CHOQUES
	4325951	L3077	2	ROSTRO DEL PARAURTI	SABOT DE PARE-CHOCS	STOSSFAENGERHORN	BUMPER HORN	ESCUDETE DEL PARA-CHOQUES
	4325952	L3067	2	STAFFA	STRIER	HALTER	BRACKET	SOPORTE
	4325953	L3077	2	STAFFA	STRIER	HALTER	BRACKET	SOPORTE
	4325954	L3067	1	GUARNIZIONE	GARNITURE	DICHTEBAUE	LINING	FORRO
	4325955	L3067	1	GUARNIZIONE S	GARNITURE	DICHTEBAUE	LINING	FORRO
	4325956	L125	1	SEDE ANT.D (1975) PER FANALI	SIEGE POUR FEUX	SITZ FUER LEUCHTEN	SEAT FOR OUTER LIGHTS	ASIENTO PARA LAMPARAS
	4325957	L126	1	SEDE ANT.S (1975) PER FANALI	SIEGE POUR FEUX	SITZ FUER LEUCHTEN	SEAT FOR OUTER LIGHTS	ASIENTO PARA LAMPARAS
	4325958	L103	1	STAFFA (1975)	STRIER	HALTER	BRACKET	SOPORTE
	4325960	L103	1	STAFFA (1975)	STRIER	HALTER	BRACKET	SOPORTE
	4325969	L3021	1	SPORTELLO (1975)	VOLET	DECKEL	LID	TAPA
	4325970	L173	6	MOLLETTA (1975)	AGRAFE	KLEMMFEDER	CLIP	SUJETADOR
	4325971	L3067	1	ELEMENTO COLLEGAMENTO D	ELEMENT DE LIAISON	VERBINDUNGSSTEG	JOINING ELEMENT	ELEMENTO DE UNION
	4325971	L3077	1	ELEMENTO COLLEGAMENTO D	ELEMENT DE LIAISON	VERBINDUNGSSTEG	JOINING ELEMENT	ELEMENTO DE UNION
	4325972	L3067	1	ELEMENTO COLLEGAMENTO S	ELEMENT DE LIAISON	VERBINDUNGSSTEG	JOINING ELEMENT	ELEMENTO DE UNION
	4325972	L3077	1	ELEMENTO COLLEGAMENTO S	ELEMENT DE LIAISON	VERBINDUNGSSTEG	JOINING ELEMENT	ELEMENTO DE UNION
	4325982	L3067	1	PIASTRINA	PLAQUETTE	PLATTCHEN	PLATE	PLACA
	4325982	L3077	1	PIASTRINA	PLAQUETTE	PLATTCHEN	PLATE	PLACA
	4325983	L3067	1	PIASTRINA	PLAQUETTE	PLATTCHEN	PLATE	PLACA
	4325983	L3077	1	PIASTRINA	PLAQUETTE	PLATTCHEN	PLATE	PLACA
	4328272	L306	1	PUNTONE SUPERIORE	TAI	STIFT	STUD	TORNAPUNTA
	4328272	L3067	1	PUNTONE	TAI	STIFT	STUD	TORNAPUNTA
	4328273	L306	1	PUNTONE SUPERIORE	TAI	STIFT	STUD	TORNAPUNTA
	4328273	L3067	1	PUNTONE S	TAI	STIFT	STUD	TORNAPUNTA
	4328274	L306	1	STAFFA ANT.D	STRIER	HALTER	BRACKET	SOPORTE
	4328275	L306	1	STAFFA ANT.S	STRIER	HALTER	BRACKET	SOPORTE
	4331241	L302	1	TASSELLO ELASTICO	TAMPON	DOPPEL	PLUG	ALMOHADILLA
	4331241	L302		ERA : 4245857				
	4385843	M107	1	SUPPORTO	SUPPORT	TRAGER	SUPPORT	SOPORTE
	10413670	L123	2	ROSETTA DI SICUREZZA	RONDELLE FREIN	SICHERUNGSRING	LOCKWASHER	ARANDELA DE FRENO
	10413670	L125	4	ROSETTA DI SICUREZZA	RONDELLE FREIN	SICHERUNGSRING	LOCKWASHER	ARANDELA DE FRENO
	10413670	L125	4	ROSETTA DI SICUREZZA	RONDELLE FREIN	SICHERUNGSRING	LOCKWASHER	ARANDELA DE FRENO
	10413671	L123	2	ROSETTA DI SICUREZZA	RONDELLE FREIN	SICHERUNGSRING	LOCKWASHER	ARANDELA DE FRENO

MODIF.	N.ORDINAZ.	SGR.	Q.	DENOMINAZIONE	DESIGNATION	BENENNUNG	DESCRIPTION	DENOMINACIONES
	10516471	C103	4	ROSETTA DI SICUREZZA 119751	RONDELLE FREIN	SICHERUNGSRING	LOCKWASHER	ARANDELA DE FRENO
	10516471	L123	1	ROSETTA DI SICUREZZA	RONDELLE FREIN	SICHERUNGSRING	LOCKWASHER	ARANDELA DE FRENO
	10516671	L306/ 1	2	ROSETTA DI SICUREZZA	RONDELLE FREIN	SICHERUNGSRING	LOCKWASHER	ARANDELA DE FRENO
	10516671	L307/ 1	2	ROSETTA DI SICUREZZA	RONDELLE FREIN	SICHERUNGSRING	LOCKWASHER	ARANDELA DE FRENO
	10516871	L306/ 1	14	ROSETTA DI SICUREZZA	RONDELLE FREIN	SICHERUNGSRING	LOCKWASHER	ARANDELA DE FRENO
	10516871	L307/ 1	14	ROSETTA DI SICUREZZA	RONDELLE FREIN	SICHERUNGSRING	LOCKWASHER	ARANDELA DE FRENO
	10517171	L306/ 1	2	ROSETTA DI SICUREZZA	RONDELLE FREIN	SICHERUNGSRING	LOCKWASHER	ARANDELA DE FRENO
	10517171	L307/ 1	2	ROSETTA DI SICUREZZA	RONDELLE FREIN	SICHERUNGSRING	LOCKWASHER	ARANDELA DE FRENO
	10519201	L302	1	ROSETTA	RONDELLE	SCHEIBE	WASHER	ARANDELA
	10519207	L108	4	ROSETTA	RONDELLE	SCHEIBE	WASHER	ARANDELA
	10519301	L102	3	ROSETTA	RONDELLE	SCHEIBE	WASHER	ARANDELA
	10519301	L108	4	ROSETTA	RONDELLE	SCHEIBE	WASHER	ARANDELA
	10519301	L109	6	ROSETTA	RONDELLE	SCHEIBE	WASHER	ARANDELA
	10519301	L120	6	ROSETTA	RONDELLE	SCHEIBE	WASHER	ARANDELA
	10519301	L302	1	ROSETTA	RONDELLE	SCHEIBE	WASHER	ARANDELA
	10519307	L127	6	ROSETTA 119751	RONDELLE	SCHEIBE	WASHER	ARANDELA
ELIM	10519401	L123	[illegible]					
	10519401	L306	[illegible]	ROSETTA	RONDELLE	SCHEIBE	WASHER	ARANDELA
	10519401	L307	[illegible]	ROSETTA	RONDELLE	SCHEIBE	WASHER	ARANDELA
	10519401	M121	[illegible]	ROSETTA	RONDELLE	SCHEIBE	WASHER	ARANDELA
	10520028	L307	4	ROSETTA	RONDELLE	SCHEIBE	WASHER	ARANDELA
	10520021	L306	6	ROSETTA	RONDELLE	SCHEIBE	WASHER	ARANDELA
	10615371	L109	6	ROSETTA DI SICUREZZA	RONDELLE FREIN	SICHERUNGSRING	LOCKWASHER	ARANDELA DE FRENO
	10615371	L120	6	ROSETTA DI SICUREZZA	RONDELLE FREIN	SICHERUNGSRING	LOCKWASHER	ARANDELA DE FRENO
	10615470	L109	2	ROSETTA DI SICUREZZA	RONDELLE FREIN	SICHERUNGSRING	LOCKWASHER	ARANDELA DE FRENO
	10615471	L109	2	ROSETTA DI SICUREZZA	RONDELLE FREIN	SICHERUNGSRING	LOCKWASHER	ARANDELA DE FRENO
	10615471	L306	8	ROSETTA DI SICUREZZA	RONDELLE FREIN	SICHERUNGSRING	LOCKWASHER	ARANDELA DE FRENO
	10615471	L307	8	ROSETTA DI SICUREZZA	RONDELLE FREIN	SICHERUNGSRING	LOCKWASHER	ARANDELA DE FRENO
	10615571	L306	5	ROSETTA DI SICUREZZA	RONDELLE FREIN	SICHERUNGSRING	LOCKWASHER	ARANDELA DE FRENO
	10615571	L307	5	ROSETTA DI SICUREZZA	RONDELLE FREIN	SICHERUNGSRING	LOCKWASHER	ARANDELA DE FRENO
	10734101	L123	1	COPIGLIA	COPIGLIE FENDUE	SPLINT	SPLIT PIN	PASADOR ABIERTO
	10734101	L127	1	COPIGLIA	COPIGLIE FENDUE	SPLINT	SPLIT PIN	PASADOR ABIERTO
	10902020	L123	2	VITE	VIS	SCHRAUBE	SCREW	TORNILLO
	10902021	L123	4	VITE	VIS	SCHRAUBE	SCREW	TORNILLO
	10902111	L109	4	VITE 119751	VIS	SCHRAUBE	SCREW	TORNILLO
	10902120	L125	11	VITE	VIS	SCHRAUBE	SCREW	TORNILLO
	10902121	L102	4	VITE	VIS	SCHRAUBE	SCREW	TORNILLO
	10902221	L109	2	VITE	VIS	SCHRAUBE	SCREW	TORNILLO
	10902221	L127	4	VITE	VIS	SCHRAUBE	SCREW	TORNILLO
	10902421	[illegible]	2	VITE	VIS	SCHRAUBE	SCREW	TORNILLO
	10902621	L127	2	VITE	VIS	SCHRAUBE	SCREW	TORNILLO
	10902820	L109	4	VITE	VIS	SCHRAUBE	SCREW	TORNILLO
	10977521	L109	6	VITE	VIS	SCHRAUBE	SCREW	TORNILLO
	10977621	L302	5	VITE 119751	VIS	SCHRAUBE	SCREW	TORNILLO
	10977721	L120	6	VITE	VIS	SCHRAUBE	SCREW	TORNILLO

MODIF.	N.ORDINAZ.	SGR.	Q.	DENOMINAZIONE	DESIGNATION	BENENNUNG	DESCRIPTION	DENOMINACIONES
	10979421	L123	4	VITE	VIS	SCHRAUBE	SCREW	TORNILLO
SOST	11036411	L109		CON 11036420				
	11036420	L109	2	SPINA	GOUPILLE	STIFT	PIN	PASADOR
	11065775	L125	4	ANELLO DI TENUTA	JOINT D'ETANCHEITE	DICHTRING	SEAL	JUNTA HERMETICA
	11195471	L125	2	ROSETTA DI SICUREZZA	RONDELLE FREIN	SICHERUNGSRING	LOCKWASHER	ARANDELA DE FRENO
	12164711	L306/ 1	2	DADO	ECROU	MUTTER	NUT	TUERCA
	12164711	L307/ 1	2	DADO	ECROU	MUTTER	NUT	TUERCA
	12605071	L125	4	ROSETTA DI SICUREZZA	RONDELLE FREIN	SICHERUNGSRING	LOCKWASHER	ARANDELA DE FRENO
	12605171	L108	4	ROSETTA DI SICUREZZA	RONDELLE FREIN	SICHERUNGSRING	LOCKWASHER	ARANDELA DE FRENO
	12605270	L109	6	ROSETTA DI SICUREZZA	RONDELLE FREIN	SICHERUNGSRING	LOCKWASHER	ARANDELA DE FRENO
	12605271	L102	1	ROSETTA DI SICUREZZA (1974)	RONDELLE FREIN	SICHERUNGSRING	LOCKWASHER	ARANDELA DE FRENO
	12605271	L108	4	ROSETTA DI SICUREZZA	RONDELLE FREIN	SICHERUNGSRING	LOCKWASHER	ARANDELA DE FRENO
	12605271	L302	3	ROSETTA DI SICUREZZA	RONDELLE FREIN	SICHERUNGSRING	LOCKWASHER	ARANDELA DE FRENO
	12605370	L125	4	ROSETTA DI SICUREZZA	RONDELLE FREIN	SICHERUNGSRING	LOCKWASHER	ARANDELA DE FRENO
	12605371	L102	4	ROSETTA DI SICUREZZA	RONDELLE FREIN	SICHERUNGSRING	LOCKWASHER	ARANDELA DE FRENO
	12605371	L105	4	ROSETTA DI SICUREZZA (1975)	RONDELLE FREIN	SICHERUNGSRING	LOCKWASHER	ARANDELA DE FRENO
	12605371	L123	14	ROSETTA DI SICUREZZA	RONDELLE FREIN	SICHERUNGSRING	LOCKWASHER	ARANDELA DE FRENO
	12605371	L125	6	ROSETTA DI SICUREZZA	RONDELLE FREIN	SICHERUNGSRING	LOCKWASHER	ARANDELA DE FRENO
	12605371	L127	10	ROSETTA DI SICUREZZA	RONDELLE FREIN	SICHERUNGSRING	LOCKWASHER	ARANDELA DE FRENO
	12605371	L302		ROSETTA DI SICUREZZA (1975)	RONDELLE FREIN	SICHERUNGSRING	LOCKWASHER	ARANDELA DE FRENO
	12605371	M104	12	ROSETTA DI SICUREZZA	RONDELLE FREIN	SICHERUNGSRING	LOCKWASHER	ARANDELA DE FRENO
ELIM	12605371	L123						
	12605371	L306	6	ROSETTA DI SICUREZZA	RONDELLE FREIN	SICHERUNGSRING	LOCKWASHER	ARANDELA DE FRENO
	12605371	L307	6	ROSETTA DI SICUREZZA	RONDELLE FREIN	SICHERUNGSRING	LOCKWASHER	ARANDELA DE FRENO
	12606601	L108	6	ROSETTA DI SICUREZZA	RONDELLE FREIN	SICHERUNGSRING	LOCKWASHER	ARANDELA DE FRENO
	12606671	L102	1	ROSETTA DI SICUREZZA	RONDELLE FREIN	SICHERUNGSRING	LOCKWASHER	ARANDELA DE FRENO
	12606671	L109	2	ROSETTA DI SICUREZZA	RONDELLE FREIN	SICHERUNGSRING	LOCKWASHER	ARANDELA DE FRENO
	12606671	L125	6	ROSETTA DI SICUREZZA 13309201	RONDELLE FREIN	SICHERUNGSRING	LOCKWASHER	ARANDELA DE FRENO
	12606771	L123	1	ROSETTA DI SICUREZZA	RONDELLE FREIN	SICHERUNGSRING	LOCKWASHER	ARANDELA DE FRENO
	12606971	L109	12	ROSETTA DI SICUREZZA	RONDELLE FREIN	SICHERUNGSRING	LOCKWASHER	ARANDELA DE FRENO
	12638101	L102	5	ROSETTA (1974)	RONDELLE	SCHEIBE	WASHER	ARANDELA
	12638101	L125	2	ROSETTA	RONDELLE	SCHEIBE	WASHER	ARANDELA
	12638101	L127	2	ROSETTA	RONDELLE	SCHEIBE	WASHER	ARANDELA
	12639401	L125	4	ROSETTA	RONDELLE	SCHEIBE	WASHER	ARANDELA
	12639701	L109	2	ROSETTA	RONDELLE	SCHEIBE	WASHER	ARANDELA
	12643701	L109	4	ROSETTA DI SICUREZZA	RONDELLE FREIN	SICHERUNGSRING	LOCKWASHER	ARANDELA DE FRENO
	12643701	L123	12	ROSETTA	RONDELLE	SCHEIBE	WASHER	ARANDELA
	12643701	L125	10	ROSETTA	RONDELLE	SCHEIBE	WASHER	ARANDELA
	12643701	L127	10	ROSETTA	RONDELLE	SCHEIBE	WASHER	ARANDELA
	12644401	L102	4	ROSETTA	RONDELLE	SCHEIBE	WASHER	ARANDELA
	12644401	L109	4	ROSETTA	RONDELLE	SCHEIBE	WASHER	ARANDELA
	12644401	L123	1	ROSETTA	RONDELLE	SCHEIBE	WASHER	ARANDELA

MODEL	N.ORDINAZ.	S.R.	Q.TÀ	DENOMINAZIONE	DESIGNATION	BENENNUNG	DESCRIPTION	DENOMINACIONES
	12666401	L127	1	ROSETTA	RONDELLE	SCHEIBE	WASHER	ARANDELA
	12666701	L123	6	ROSETTA	RONDELLE	SCHEIBE	WASHER	ARANDELA
	12666701	L306	6	ROSETTA	RONDELLE	SCHEIBE	WASHER	ARANDELA
	12666701	L301	6	ROSETTA	RONDELLE	SCHEIBE	WASHER	ARANDELA
	12666801	L125	4	ROSETTA	RONDELLE	SCHEIBE	WASHER	ARANDELA
	12802190	M107	2	CINTURA DI SICUREZZA	CEINTURE DE SÉCURITÉ	SICHERHEITSGURT	SAFETY BELT	CINTURON DE SEGURIDAD
	13271801	L123	2	VITE INF.	VIS	SCHRAUBE	SCREW	TORNILLO
	13273801	L302	2	VITE	VIS	SCHRAUBE	SCREW	TORNILLO
	13274001	L127	2	VITE	VIS	SCHRAUBE	SCREW	TORNILLO
	13274201	L138	4	VITE	VIS	SCHRAUBE	SCREW	TORNILLO
	13276201	M101	12	VITE	VIS	SCHRAUBE	SCREW	TORNILLO
	13276401	L302	1	VITE	VIS	SCHRAUBE	SCREW	TORNILLO
	13297301	L132	1	VITE	VIS	SCHRAUBE	SCREW	TORNILLO
	13297302	L308	4	VITE	VIS	SCHRAUBE	SCREW	TORNILLO
	13297302	L108		VITE				
	13297601	L108	6	VITE	VIS	SCHRAUBE	SCREW	TORNILLO
	13309001	L109	1	VITE	VIS	SCHRAUBE	SCREW	TORNILLO
	13309201	L125	6	VITE	VIS	SCHRAUBE	SCREW	TORNILLO
	13309401	L108	4	VITE	VIS	SCHRAUBE	SCREW	TORNILLO
	13309401	L108		VITE				
	13309401	L132	4	VITE	VIS	SCHRAUBE	SCREW	TORNILLO
	13310801	L108	1	VITE	VIS	SCHRAUBE	SCREW	TORNILLO
	13310801	L108		VITE				
	13310801	L109	12	VITE	VIS	SCHRAUBE	SCREW	TORNILLO
	13310801	L125	4	VITE	VIS	SCHRAUBE	SCREW	TORNILLO
	13311002	L123	1	VITE	VIS	SCHRAUBE	SCREW	TORNILLO
	13311101	L127	4	VITE	VIS	SCHRAUBE	SCREW	TORNILLO
	13313001	M131	1	VITE	VIS	SCHRAUBE	SCREW	TORNILLO
	13425521	L109	4	VITE	VIS	SCHRAUBE	SCREW	TORNILLO
	13836071	L109	4	VITE	VIS	SCHRAUBE	SCREW	TORNILLO
	14054516	M06	8	DADO	ÉCROU	MUTTER	NUT	TUERCA
	14054511	M07	4	DADO	ÉCROU	MUTTER	NUT	TUERCA
	14186276	L138	12	GRAPPETTA	AGRAFE	KLEMMSTUCK	CLIP	SUJETADOR
	14187580	L139	2	MOLLETTA	AGRAFE	KLEMMSTUCK	CLIP	SUJETADOR
	14188480	M101	4	FERMAGLIO	AGRAFE	KLEMMSTUCK	CLIP	SUJETADOR
	14303220	L102	5	VITE	VIS	SCHRAUBE	SCREW	TORNILLO
	14567480	L109		TRASFORMATORE	TRANSFORMATEUR	TRANSFORMATOR	TRANSFORMER	ALMOHADILLA
				PER VETRI	POUR VITRAGE	FÜR GLASSCHEIBE	FOR GLASS PANE	PARA CRISTAL
	14569580	L139	4	MOLLETTA	AGRAFE	KLEMMSTUCK	CLIP	SUJETADOR
	14578185	M111		FERMAGLIO	AGRAFE	KLEMMSTUCK	CLIP	SUJETADOR
	14578185	M101		FERMAGLIO				
	15186001	L127		VITE	VIS	SCHRAUBE	SCREW	TORNILLO
	15896211	L139		DADO	ÉCROU	MUTTER	NUT	TUERCA
	15896211	L123		DADO	ÉCROU	MUTTER	NUT	TUERCA
	15896211	L127		DADO	ÉCROU	MUTTER	NUT	TUERCA

MODIF.	N.ORDINAL.	SGR.	Q.	DENOMINAZIONE	DESIGNATION	BEZEICHNUNG	DESCRIPTION	DENOMINACIONES
	15896411	L102	1	DADO	ECROU	MUTTER	NUT	TUERCA
	15896411	L109	12	DADO	ECROU	MUTTER	NUT	TUERCA
	15896411	L125	2	DADO	ECROU	MUTTER	NUT	TUERCA
	15977621	L306/ 1	2	VITE	VIS	SCHRAUBE	SCREW	TORNILLO
	15977621	L307/ 1	2	VITE	VIS	SCHRAUBE	SCREW	TORNILLO
	16043421	L125	4	VITE	VIS	SCHRAUBE	SCREW	TORNILLO
	16043421	L306/ 1	2	VITE	VIS	SCHRAUBE	SCREW	TORNILLO
	16043421	L307/ 1	2	VITE	VIS	SCHRAUBE	SCREW	TORNILLO
	16101711	L125	4	DADO	ECROU	MUTTER	NUT	TUERCA
	16102311	L123	2	DADO	ECROU	MUTTER	NUT	TUERCA
	16133021	L103	4	VITE (119/5)	VIS	SCHRAUBE	SCREW	TORNILLO
	16135521	L306	4	VITE	VIS	SCHRAUBE	SCREW	TORNILLO
	16135521	L307	4	VITE	VIS	SCHRAUBE	SCREW	TORNILLO
	16135621	L304	2	VITE	VIS	SCHRAUBE	SCREW	TORNILLO
	16135621	L307	2	VITE	VIS	SCHRAUBE	SCREW	TORNILLO
	16138721	L306/ 1	4	VITE	VIS	SCHRAUBE	SCREW	TORNILLO
	16138721	L307/ 1	4	VITE	VIS	SCHRAUBE	SCREW	TORNILLO
	16139021	L306/ 1	8	VITE	VIS	SCHRAUBE	SCREW	TORNILLO
	16139021	L307/ 1	8	VITE	VIS	SCHRAUBE	SCREW	TORNILLO
	16192521	L306	6	VITE	VIS	SCHRAUBE	SCREW	TORNILLO
	17659701	M107	6	VITE	VIS	SCHRAUBE	SCREW	TORNILLO
	17668101	L127	4	VITE (119/5)	VIS	SCHRAUBE	SCREW	TORNILLO
	17669001	L302	3	VITE	VIS	SCHRAUBE	SCREW	TORNILLO
	17670101	L127	8	VITE	VIS	SCHRAUBE	SCREW	TORNILLO
	17670107	L127	6	VITE (119/5)	VIS	SCHRAUBE	SCREW	TORNILLO
	17671201	L302	3	VITE	VIS	SCHRAUBE	SCREW	TORNILLO
	17675070	L108	22	VITE	VIS	SCHRAUBE	SCREW	TORNILLO
	17677706	L125	4	VITE	VIS	SCHRAUBE	SCREW	TORNILLO
	17679001	M107	4	VITE	VIS	SCHRAUBE	SCREW	TORNILLO
	17679202	L301	8	VITE	VIS	SCHRAUBE	SCREW	TORNILLO
	17679202	L301		ERA 17679206				
ERA	17679206	L301		VED 17679202				
	17679870	L306	2	VITE	VIS	SCHRAUBE	SCREW	TORNILLO
	17679870	L307	2	VITE	VIS	SCHRAUBE	SCREW	TORNILLO
	17680501	L102	1	VITE	VIS	SCHRAUBE	SCREW	TORNILLO
	17680901	L102	4	VITE	VIS	SCHRAUBE	SCREW	TORNILLO
ERA	92034309	M107		VED 4308117				
ERA	92034310	M107		VED 4308118				
	92034730	L109	2	TIRANTE DI ARRESTO PORTA	TIRANT D'ARRET	TUERSPANNER	DOOR CHECK	TIRANTE DE RETENCION
C 5235	92034741	M108	1	CINGHIA	SANGLE	HALTERIEMEN	STRAP	CORREA

N.AGG.	N.ORDINAZ.	SGR.	Q.	DENOMINAZIONE	DESIGNATION	BENENNUNG	DESCRIPTION	DENOMINACIONES
/24	4325812 *	M107	1	GUARNIZIONE (1978)	JOINT	DICHTUNG	GASKET	JUNTA
/24	4326037 *	M101	1	APPOGGIABRACCIA D	ACCOUDOIR	ARMLEHNE	ARMREST	APOYABRAZOS
/24	4326038 *	M101	1	APPOGGIABRACCIA S	ACCOUDOIR	ARMLEHNE	ARMREST	APOYABRAZOS
/24	4326039 *	M101	2	FODERA (1978)	MOUSSE	UEBERZUG	COVERING	FORRO
/24	4326040 *	M101	2	FODERA (1978)	MOUSSE	UEBERZUG	COVERING	FORRO
/24	4326041 *	M101	2	FODERA (1978)	MOUSSE	UEBERZUG	COVERING	FORRO
/24	4326042 *	M101	2	FODERA (1978)	MOUSSE	UEBERZUG	COVERING	FORRO
/24	4326043 *	M101	2	FODERA (1978)	MOUSSE	UEBERZUG	COVERING	FORRO
/24	4326044 *	M101	2	FODERA (1978)	MOUSSE	UEBERZUG	COVERING	FORRO
/24	4326053 *	L109	1	PANNELLO D (1978)	PANNEAU	VERKLEIDUNG	PANEL	CONTRAPANEL
/24	4326054 *	L109	1	PANNELLO S (1978)	PANNEAU	VERKLEIDUNG	PANEL	CONTRAPANEL
/24	4326055 *	L109	1	PANNELLO D (1978)	PANNEAU	VERKLEIDUNG	PANEL	CONTRAPANEL
/24	4326056 *	L109	1	PANNELLO S (1978)	PANNEAU	VERKLEIDUNG	PANEL	CONTRAPANEL
/24	4326057 *	L109	1	PANNELLO D (1978)	PANNEAU	VERKLEIDUNG	PANEL	CONTRAPANEL
/24	4326058 *	L109	1	PANNELLO S (1978)	PANNEAU	VERKLEIDUNG	PANEL	CONTRAPANEL
/24	4326060 *	M107	1	RIVESTIMENTO (1975)	REVETEMENT	VERKLEIDUNG	COVERING	FORRO
/24	4326062 *	M107	1	RIVESTIMENTO (1975)	REVETEMENT	VERKLEIDUNG	COVERING	FORRO
/24	4326063 *	M107	1	RIVESTIMENTO (1975)	REVETEMENT	VERKLEIDUNG	COVERING	FORRO
/24	4326064 *	M107	1	RIVESTIMENTO (1975) (26)	REVETEMENT	VERKLEIDUNG	COVERING	FORRO
/24	4326066 *	M107	1	RIVESTIMENTO (1975) (26)	REVETEMENT	VERKLEIDUNG	COVERING	FORRO
/24	4326067 *	M107	1	RIVESTIMENTO (1975) (26)	REVETEMENT	VERKLEIDUNG	COVERING	FORRO
/24	4326069 *	M108	1	RIVESTIMENTO (1975)	REVETEMENT	VERKLEIDUNG	COVERING	FORRO
/24	4326070 *	M108	1	RIVESTIMENTO (1975)	REVETEMENT	VERKLEIDUNG	COVERING	FORRO
/24	4326071 *	M108	1	RIVESTIMENTO (1975)	REVETEMENT	VERKLEIDUNG	COVERING	FORRO
/24	4326072 *	M107	1	RIVESTIMENTO (1975)	REVETEMENT	VERKLEIDUNG	COVERING	FORRO
/24	4326073 *	M107	1	RIVESTIMENTO (1975)	REVETEMENT	VERKLEIDUNG	COVERING	FORRO
24	4326074 *	M107	1	RIVESTIMENTO (1975)	REVETEMENT	VERKLEIDUNG	COVERING	FORRO
/24	4326077 *	M107	1	RIVESTIMENTO POST.SUP.(1975)	REVETEMENT	VERKLEIDUNG	COVERING	FORRO
/24	4326078 *	M107	1	RIVESTIMENTO POST.SUP.(1975)	REVETEMENT	VERKLEIDUNG	COVERING	FORRO
/24	4326079 *	M107	1	RIVESTIMENTO POST.SUP.(1975)	REVETEMENT	VERKLEIDUNG	COVERING	FORRO
/24	4326080 *	M107	1	RIVESTIMENTO POST.INF.(1975)	REVETEMENT	VERKLEIDUNG	COVERING	FORRO
/24	4326081 *	M107	1	RIVESTIMENTO POST.INF.(1975)	REVETEMENT	VERKLEIDUNG	COVERING	FORRO
/24	4326082 *	M107	1	RIVESTIMENTO POST.INF.(1975)	REVETEMENT	VERKLEIDUNG	COVERING	FORRO

N.AGG.	N.ORDINAZ.	SGR.	Q.	DENOMINAZIONE	DESIGNATION	BENENNUNG	DESCRIPTION	DENOMINACIONES
/24	4326087 *	M107	1	RIVESTIMENTO (1976)	REVETEMENT	VERKLEIDUNG	COVERING	FORRO
/24	4326088 *	M107	1	RIVESTIMENTO (1976)	REVETEMENT	VERKLEIDUNG	COVERING	FORRO
/24	4326089 *	M107	1	RIVESTIMENTO (1976)	REVETEMENT	VERKLEIDUNG	COVERING	FORRO
/24	4326091 *	M108	1	RIVESTIMENTO (1975)	REVETEMENT	VERKLEIDUNG	COVERING	FORRO
/24	4326092 *	M108	1	RIVESTIMENTO (1975)	REVETEMENT	VERKLEIDUNG	COVERING	FORRO
/24	4326093 *	M108	1	RIVESTIMENTO (1975)	REVETEMENT	VERKLEIDUNG	COVERING	FORRO
/24	4326095 *	M106	1	TAPPETO (1978)	TAPIS	BELAG	MAT	ALFOMBRA
/24	4326096 *	M106	1	TAPPETO (1978)	TAPIS	BELAG	MAT	ALFOMBRA
/24	4326097 *	M106	1	TAPPETO (1978)	TAPIS	BELAG	MAT	ALFOMBRA
/24	4326098 *	M106		TAPPETO (1978)	TAPIS	BELAG	MAT	ALFOMBRA

MASTER INDEX
Fiche #:09-W

GROUP	GRID
L,BODY EXTERIORS	A-1
M,BODY INTERIORS	D-8
PARTS LISTS	E-1
ADDITIONAL	E-12 L
ORDERING PARTS	F-2
USE OF CATALOG	F-3/F-7
ENGLISH	F-6
DAT CODES	F-8
ABBREVIATIONS	F-9
VERSION	F-10
MODIFICATION	F-11
PAINT LIST, U.S.A.	F-2/F-4 LOWER
ACCESSORIES, U.S.A.	F-5 LOWER
ACCESSORIES, CANADA	F-6 LOWER

GENERAL INFORMATION

ORDERING PARTS	F-2
USE OF CATALOG	F-3/F-7
ENGLISH	F-6
DAT CODES FOR SERVICE TIME SCHEDULE	F-8
ABBREVIATIONS	F-9
VERSION	F-10
MODIFICATION	F-11

NORME GENERALI PER LE ORDINAZIONI

Le ordinazioni delle parti di ricambio vengono evase esclusivamente in base al **numero di ordinazione** della parte che si richiede.

È assolutamente indispensabile attenersi alle norme contenute nelle «Avvertenze generali per la consultazione del catalogo», tenendo presente i seguenti dati da rilevare dalla targhetta riassuntiva del veicolo e dalla marcatura del motore:

- tipo dell'autotelaio (1)
- tipo del motore (2)
- numero per ricambi (3) (vett. n.)
- numero del motore (4) (mot. n.)

Targhetta riassuntiva
Plaque d'identification
Typschild
Identification plate
Chapa de identicación

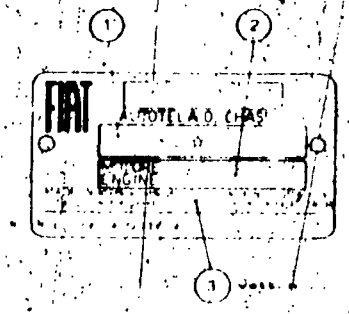

Marcatura del motore
Estampillage du moteur
Stempeln des Motors
Engine marking
Marca del motor

RÈGLES GÉNÉRALES POUR LES COMMANDES

Les commandes des pièces détachées ne sont expédiées que suivant le **numéro de commande** de la pièce requise.

Pour repérer exactement le numéro de commande il faut se tenir aux normes contenues dans les «Règles générales pour la consultation du catalogue», compte tenu des données suivantes à relever de la plaque d'identification du véhicule et de l'estampillage du moteur:

- type du châssis (1)
- type du moteur (2)
- numéro de pièces detachées (3) (vett. n.)
- numéro du moteur (4) (mot. n.)

ANWEISUNGEN ZUR BESTELLUNG

Bei Bestellung Ersatzteile wird stets die **Bestellnummer** des gewünschten Ersatzteils angegeben auf Grund derer die Lieferung erfolgt.

Zum Auffinden der Bestellnummer soll man die «Hinweise zum Gebrauch des Katalogs» nachschlagen und auf folgende Angaben merken, welche aus dem Typschild des Fahrzeugs und aus dem Stempeln des Motors aufzunehmen sind:

- Fahrgestellbaumuster (1)
- Motorbaumuster (2)
- Ordnungsnummer für Ersatzzwecke (3) (vett. n.)
- Motornummer (4) (mot. n.)

ORDERING PARTS

Orders for spare parts are fulfilled exclusively according to the **part number** of the ordered item.

Follow «Use of this catalog» instructions for exact part number identification, bearing in mind the following data reported on the identification plate and on engine marking:

- chassis type (1)
- engine type (2)
- number for spares (3) (vett. n.)
- engine number (4) (mot. n.)

NORMAS GENERALES PARA LOS PEDIDOS

Los pedidos de las piezas de recambios son se espiden en base a numero de pedido de la pieza que se requiere.

Para conocer el número de recambio hay que tenerse a las «Normas contenidas en «Como se manejo el catalogo», teniendo en cuenta los datos siguientes los que se sacan de la placa de identificación del vehículo y de la marca del motor:

- modelo del chasis (1)
- modelo del motor (2)
- numero para recambios (3) (vett. n.)
- numero del motor (4) (mot. n.)

AVVERTENZE GENERALI PER LA CONSULTAZIONE DEL CATALOGO

1 - Contenuto del catalogo a ricerca delle parti di ricambio

Il presente catalogo contiene gli elenchi e le illustrazioni di tutte le **parti di ricambio** comprese quelle della carrozzeria relative a più modelli.

Per una corretta ricerca delle parti di ricambio occorre **per ciascun modello che interessa** è necessario:

a) consultare l'**Elenco delle versioni** (... codici numerici della **versione base**, e delle eventuali varianti);

b) consultare l'elenco delle parti di ricambio e le tavole del catalogo come indicato a ... pag. 2 e 3.

2 - « ELENCHI DELLE PARTI DI RICAMBIO » (suddivisi per modello)

Elencano tutte le parti di ricambio ... le parti ... SOST. ... ELIM. ... ERA ... ERR ... in ordine **progressivo di n° di ordinazione**.

Per ... le parti di ricambio ... e denominazioni ... grigie ...

Indicazioni e abbreviazioni usate nelle ...

SOST. = parte ...

ELIM. = parte ...

ERA = parte ...

ERR. = parte ...

ERR. = parte ...

CM = ... centimetri

M = ... metri

T = ... tabelle ...

S = ... Serie ...

Abbreviazioni usate nella colonna « Denominazione » (solo nelle parti ... lavate)

vedere pag. 10

(1) ... alla direzione ... del veicolo

... per gli aggiornamenti previsti dal catalogo

3 - « TAVOLE » (suddivise per modello)

Illustrano le parti di ricambio di ciascun sottogruppo. Ogni tavola riporta (a destra) il **numero del sottogruppo** e l'eventuale numero di ... **denominazione del sottogruppo** (a ...) e le **indicazioni del modello** e della **validità della tavola** (a sinistra).

Le parti di ricambio ... contraddistinte dal **numero di ordinazione** ... tutte le ... generale per ... le parti stesse ... sulle tavole.

Indicazioni e abbreviazioni usate nelle tavole

4072798 = ... normale ...

0736317 005336 = ... alternativa

4119795 = parte ... della versione base 0...

4119796 = parte della versione base 01 ... della versione 39

4119797 = parte ... versione base 01 e 03 ... della variante 39

4119783 = parte della versione base ... della versione 39 e 4...

900876 = parte ... (pesante ...)

4119259 = parte ... aggiornata ...

4101758

4118204 = ...

... = 4064081 = ...

... = 4081948 = parte ...

4074009 = ...

4206433 = ...

4206000 = ...

A3.01, M1.01. = parte ...

1, 2, = ...

A, B, = ...

... = parte ...

d = parte destra

... = diametro ...

... = vedi n. 071115

significa che la tavola vale fino al veicolo ... per ricambi 071115 in conseguenza della modifica 2210

... = vedi n. 071116

significa che la tavola vale dal veicolo ... per ricambi 071116 in conseguenza della modifica 2210

4 - Tabelle « MODIFICHE » (suddivise per modello)

Elencano tutte le modifiche apportate ai veicoli durante il corso della produzione, le loro **applicazioni** (con una per ogni illustrazione compresa nella modifica quando ... è necessario) e le **norme di ricambio**.

Indicazioni e abbreviazioni usate nelle tabelle modifiche

... « Modifica »

C = ... (... art. a ...)

D = ... (... parti ...)

... = vedi ... = ... per ...

... = mod. n. ... = ... modifica

vedi n. ... = ... per ...

mod. n. ... = ...

n. 1970 = ... 1970

... « Sgr. interessati » e **Norme di ricambio »**

C1 30 - C1 32 - L1 84 - L1 89 = ... gruppi interessati ...

... = ... per ...

4065118 = ... Catalogo ...

4065418 = ...

... = ... parti ... 01 2012

4076388 = 4086484 = 4091472 = ...

4076388 = 4086484 = 4091472 = ...

... = ... 4086484 ... 4091472

4064777 = 4082585 = 4074547 = ...

4064082 = 4082585 = 4074547 = ...

... = ... 4086484 ... 4074547

nessun numero = le parti ... da ...

5 - « TABELLE VARIE » (suddivise per modello)

Comprendono le tabelle da consultare per individuare ... relative alle « Parti di ricambio Riviera » ... per impianto elettrico ... « Capicorda e cappucci isolanti » per ... elettrico ...

NOTA Le parti di ricambio della carrozzeria vengono fornite durante la produzione di serie del veicolo e fino ad esaurimento delle disponibilità.

RÈGLES GÉNÉRALES POUR LA CONSULTATION DU CATALOGUE

1 - Contenu du catalogue et recherche des pièces détachées

Le catalog[illegible] comprend [illegible] les pièces détachées y compris celles de la carrosserie [illegible] référence à [illegible]

Pour [illegible] pour chaque n° vérité concerné.

Il comprend [illegible] « Liste des versions » [illegible] repère [illegible] codes numériques de [illegible] version de base et des variantes [illegible]

[illegible] la liste des pièces détachées et les planches correspondantes du catalogue [illegible]

TES DES PIÈCES DÉTACHÉES

[illegible]

[illegible] en ordre progressif de n° de commande [illegible] désignations

Symboles et abréviations [illegible]

[illegible]

Abréviations [illegible] « Désignation » [illegible]

2 - « PLANCHES »

[illegible] numéro du sous-groupe et le numéro de la [illegible] la désignation du sous-groupe [illegible] indication du modèle et [illegible] validité de la planche [illegible]

[illegible] numéro de commande [illegible]

Symboles et abréviations [illegible]

4072798
874 4051338
4119705
4119796

4119797

4119708

980074
4119259
4101758
4118204

4064404
4081944
4036809

4236821
4240803
A3 01 M1 01
1, 2
A, R

[illegible]

vert n° 071115 :

[illegible] jusqu'à [illegible] pièces détachées 071115 [illegible]

vert n° 071116 :

[illegible]

4 - Tableaux « MODIFICATIONS »

[illegible] et modifications [illegible] applications [illegible] pour les remplacements

Symboles et abréviations [illegible]

« MODIFICA »

C [illegible]

D [illegible]

[illegible]

TX 1910 [illegible]

Sgr interessati e Norme di ricambio [illegible]

C1 30 C1 32 L1 01 L1 09 [illegible]

4065478
4064418

4076588 4064484 4092472

4076588 4064484 4092472

4066397 4082585 4074547 R

4066892 4082585 4074547

Aucun chiffre [illegible] pièces détachées

5 - « TABLEAUX DIVERS »

Ils comprennent les tableaux à consulter pour connaître les données se rapportant aux « Pièces détachées Rivaux » « Cables électriques » aux « Cosses et capuchons » [illegible] de câblage électriques [illegible] etc.

NOTA Les pièces de carrosserie [illegible] pendant [illegible] du véhicule en série et jusqu'à épuisement des stocks.

HINWEISE ZUM GEBRAUCH DES KATALOGS

Inhalt des Katalogs und Aufbau der Ersatzteile

[illegible] Reihung enthält die Ersatzteilnummern und die entsprechenden Bildtafeln, gemeinsam für die Karosserieteile [illegible] Modellen

[illegible] der Ersatzteile [illegible]

[illegible] der **Liste der Ausführungen** [illegible] *Papier*) nachzuschlagen [illegible] die **Kennnummer** der **Grundausführung** [illegible] der abgeleiteten Typen [illegible]

[illegible] die **Bildtafeln** [illegible] entsprechenden **Ersatzteillisten** nachzuschlagen [illegible]

[illegible] **ERSATZTEILE** [illegible]

[illegible] der Bildtafel angegebenen Ersatzteile [illegible] **laufender Bestellnummernfolge** an [illegible] **Benennung** [illegible] Ersatzteile [illegible] Bildtafel

Erläuterungen [illegible] **Abkürzungen** auf der Bildtafel

[illegible]

[illegible] der [illegible] Bildtafel

ERA [illegible]

ERA [illegible]

[illegible]

ERA CORR [illegible]

ERA [illegible]

(Erläuterungen auf der Bildtafel)

CM = vom laufenden Zentimeter erhältlich

M = vom laufenden Meter erhältlich

[illegible] = siehe Verschiedenes

S = Vorhandensein von Setzen [illegible]

Abkürzungen auf der Spalte **Benennung**

[illegible] *Deutsch nationale* [illegible]

siehe Seite 10

[illegible] *Bezug auf die Fahrtrichtung des Fahrzeugs*

[illegible] für die Blätter der provisorischen Ergänzungen des Katalogs

BILDTAFELN [illegible]

[illegible] die Ersatzteile [illegible] Untergruppe

Auf jeder Bildtafel ist folgendes abgegeben: die **Untergruppennummer** (rechts) mit der exclusiven Bestellnummer des Katalogblatts, die **Untergruppenbenennung** [illegible] Mitte) sowie das **Modell** und die **Gültigkeit** der **Bildtafel** (oben)

(Die abgebildeten Ersatzteile sind mit den **Bestellnummern** und sonstigen Angaben versehen. Angaben [illegible] Bestellnummer [illegible] angegeben [illegible] gewünschten Ersatzteils [illegible] auf der Bildtafel [illegible] Ersatzteile

Erläuterungen [illegible] **Abkürzungen** auf der Bildtafel

[illegible]

B 1637 [illegible] 136 [illegible] gekennzeichnetes Teil

4119705 [illegible] Eigenschaft [illegible]

4119704 [illegible] Teil der [illegible] Typs [illegible]

4119707 [illegible] Teil der [illegible] Eigenschaft des Typs [illegible]

4119700 [illegible] Teil [illegible] der Typen [illegible]

900076 [illegible]

4119259 [illegible]

4101758 [illegible]

4118204 [illegible]

[illegible] 4064001 [illegible]

[illegible] 4081908 [illegible]

4036809 [illegible]

[illegible] [illegible]

[illegible] [illegible]

A3 01. M1.01. [illegible]

1. 2. [illegible]

A. B. [illegible]

[illegible] = vorher [illegible] 071115

bedeutet die Tatsache, daß das Fahrzeug [illegible] Ordnungsnr. 1 Ersatzteile [illegible] 071115 [illegible] der Änderung 2230

[illegible] = vorher [illegible] 071116

bedeutet die Tatsache, daß das Fahrzeug [illegible] Ordnungsnr. 1 Ersatzteile [illegible] 071116 [illegible] der Änderung 2210

Tabellen [illegible] **ÄNDERUNGEN** [illegible]

[illegible] dieser Abschnitt sind sämtliche [illegible] Änderungen sowie ihre Einführung (mit einer eventuellen [illegible] notwendigen [illegible] Gesamtbezeichnung der Änderung) und die Ersatzteilanweisungen aufgeführt

Hinweise und Abkürzungen [illegible]

Spalte **„Modifikation"** (Änderung)

C [illegible]

D [illegible]

[illegible]

[illegible] Fahrzeug [illegible]

[illegible] Ersatzteile [illegible]

[illegible] 1X 1970 [illegible] Serienbeginn 1970 [illegible]

Spalte **„Sgr. interessata"** Norme di ricambio [illegible]

C1 30 C1 32 L1 05 L1 09 [illegible]

[illegible]

[illegible] [illegible] [illegible]

[illegible] [illegible] [illegible]

[illegible] [illegible] [illegible]

[illegible] [illegible] [illegible] [illegible]

[illegible] [illegible] [illegible] [illegible]

[illegible] [illegible] [illegible] [illegible]

[illegible] [illegible] [illegible] [illegible]

[illegible] [illegible] [illegible] [illegible]

[illegible] [illegible] [illegible] [illegible]

[illegible] [illegible] [illegible] [illegible]

[illegible] [illegible] [illegible] [illegible]

Keine Nummer [illegible] Ersatzteile [illegible]

VERSCHIEDENES [illegible]

[illegible] dieser Abschnitt enthält die Tabellen [illegible] die [illegible] Ersatzteile [illegible] Leitungen [illegible] und der [illegible] und Schutzkappen [illegible] zusammengefaßt sind

ANMERKUNG [illegible] Ersatzteile [illegible] Serienfabrikation [illegible] Aufbrauch [illegible] Lager/bestände

USE OF THE CATALOG

1) **Catalog contents and how to locate [illegible]**

More model spares are listed and illustrated in this catalog; also **bodywork** spares are included.

To find the spares of the **model concerned** proceed as follows:

a) consult the **« Version list »** (on the page [illegible]) for the **code number** of the **basic version** or **variants** [illegible]

b) consult the **spare parts list** (pp. [illegible]) the **plates** (pp. [illegible]) the catalog as [illegible]

2) **« SPARE PART LISTS »** (subdivided by [illegible])

List the spare parts illustrated in the plates and the [illegible] supplied as the [illegible] (Code, [illegible] ERA [illegible]) (ERA [illegible] according to the progressive part number).

Note: [illegible] description).

Indications and abbreviations [illegible]

Stgr [illegible] = parts [illegible]

Ecart [illegible] = part [illegible]

(If [illegible] the [illegible]

ERA [illegible] = [illegible] see

ERA [illegible] = [illegible]

ERA [illegible] = [illegible]

ERA [illegible] = part errata

ERA [illegible] = part errata [illegible]

[illegible]

M = [illegible] in the [illegible]

M = [illegible] in the model

[illegible] see « Modifications » [illegible]

[illegible] some parts are [illegible] supplied as [illegible]

« Sel [illegible]

Abbreviations used in the **« Description »** [illegible] (also in the plate section). (Remove [illegible] see page [illegible])

(*) delete [illegible] by [illegible] the same [illegible] as the [illegible] only [illegible] the catalog sheets.

3) **« PLATES »** (subdivided by model)

Illustrations show the spare parts of each subgroup. Below each page there is the **Sgr. No** (right) and sheet number if any, the **Sgr** title (center) and the **model indications** and the **plate applicability** (left).

The spare parts illustrated are identified by respective **part numbers** (together with other indications (modifications, covers, etc.), generally sufficient for identification of parts on plate).

Indications and abbreviations used in the plates:

4072796 = standard supply part

073637-001338 = parts supplied as an alternative

4119701 = spare specific to basic version 01

4119704 = part of basic version 01 specific for variant 39

4119707 = spare of basic versions 01 and 03 specific for variant 39

4119708 = [illegible] specific for variants 39 and 42

980076 = 5 mm thick part

4119239 = [illegible] part

4101758 = assembly

4118204 = assembly whose separate components are shown in Sgr. A3.01.

[illegible] 4064081 = ante modification 2180 part

[illegible] 4081940 = post modification 2180 part

4076089 = part replaced (for types listed on the catalog)

[illegible] = part superseded (for all types)

[illegible] = errata change

A3.01, M1.01 = part shown in Sgr. A3.01, M1.01

1, 2 = see the proper list of spare parts

A, B, = [illegible]

[illegible] = left [illegible]

d = right [illegible]

[illegible] = some parts are supplied as [illegible] etc.

[illegible] **« vett. n. 071115 »** means consequently to modification 2210 the plate is valid up to vehicle with number for spares 071115

[illegible] **« vett. n. 071116 »** means consequently to modification 2210 the plate is valid from vehicle with number for spares 071116.

4) **« MODIFICATIONS »** tables (subdivided by model)

List all the **modifications** introduced on vehicles during the production, their **applicability** (when necessary), shows also a complete illustration of the modification as a whole) and the **directions for replacement**.

Indications and abbreviations used in the modification tables.

column **« Modifica »** (modification):

C = modification No. (for the A.M. parts)

D = modification No. (for the P.M. parts)

effectiveness:

« vett. n. [illegible] = up to vehicle with number for spares

« mot. n. [illegible] = up to [illegible]

« vett. n. [illegible] = from vehicle with number for spares

mot. [illegible] = from engine No.

IX 1970 = introduced in september 1970

column **« Sgr. interessati »** **« Norme di ricambio »** (Sgr. involved and directions for replacement):

C1.30 - C1.32 - L1.05 - L1.09 = Subgroups involved in the modification.

Indications used in the directions for replacement:

4064118 = D 2072 (for types listed on the catalog).

4064118 = D 2072 (for all types)

[illegible] = mount at post modification D 2072 parts

4074588 = 4064484 + 4092472 (for types listed on the catalog)

[illegible] = 4064484 + 4092472 (for all types)

= mount 4064486 and 4092472

4064097 = 4082585 + 4074547 (for types listed on the catalog)

4064082 = 4082585 + 4074547 (for all types)

= mount 4082585 discarding 4074547

no number reported = supply of ante modification parts is continued.

5) **« MISCELLANEA »** (subdivided by model)

This section includes the list showing the data relevant to **« RIV spares »**, **« Electrical cables »**, **« Electrical cable terminals and boots »** etc.

NOTE - **Body parts** are usually supplied as spares throughout the period of available stocks of manufacture and up to exhaustion when production is discontinued.

CÓMO SE MANEJA EL CATÁLOGO

1 · Contenido del catálogo y cómo se buscan las piezas de repuesto

Este catálogo comprende las listas y las láminas referentes a todas las piezas de repuesto y también a aquellas de la carrocería relativas a diferentes modelos.

Para buscar las piezas de repuesto mismas por cada modelo que interesa, hay que

a) conocer los códigos de las versiones básicas y de las derivadas (si los hay) los que figuran en la « Lista de versiones » (*papel naranja*),

y consultar la lista de piezas de repuesto y las láminas atendiendo cuanto se explica en los puntos 2 y 3.

2 · « LISTAS DE PIEZAS DE REPUESTO » (*subdivididas por modelo*)

Comprenden las piezas de repuesto ilustradas en las láminas y las piezas individuales en juegos, las piezas « SOSTITUIDAS » « ELIM » « ERA » VED » « ERA » etc. y reseñadas según el orden progresivo del num. de pedido.

Para comprender mejor las denominaciones de las piezas de repuesto es oportuno mirar las ilustraciones de las láminas.

Notaciones y abreviaturas usadas en la lista

SOST — pieza reemplazada por
ELIM — pieza anulada
(*para los tipos que ahora no están en catálogo y que se encuentran en la lista*)
ERA VED — pieza anulada véase
ERA — pieza anulada
(*para todos los tipos y con ... a ...*)
ERR — pieza errónea nuevo
ERR — pieza errónea
(*...*)
CM — se suministra por centímetros — en la columna
M — se suministra por metros — « U »
T — véase « Tablas » — (*Cantidad*)
S — existencia de « juegos » etc.

Abreviaturas usadas en las columna « **Denominaciones** » (*solamente en la columna en renglón blanco*) « *Denominaciones* »

véase pag 10

(*) respecto de la dirección de la marcha del vehículo

solamente para las hojas de puesta al día provisionales del catálogo

3 · « LÁMINAS » (*subdivididas por modelo*)

Representan las piezas de recambio de cada subgrupo. Pie de cada hoja tenemos *en la parte derecha* el número del subgrupo y el número de la hoja (*ej. 01/1*) en el centro, la denominación del subgrupo, y *en la parte izquierda* el modelo y la validez de la lámina.

Cada pieza de recambio representada lleva el número de pedido acompañado de todas las indicaciones (*modificaciones, códigos, etc.*) que generalmente son suficientes para reconocer las mismas piezas en la lámina.

Notaciones y abreviaturas usadas en las láminas

4072790 — pieza de suministro normal
873637-885134 — piezas de suministro alternativo
4119705 (01) — pieza propia de la versión básica 01
4119706 (01 39) — pieza de la versión básica 01 propia de su derivada 39
4519707 (01 03 39) — pieza de las versiones básicas 01 y 03 propia de su derivada 39
4119708 (01 39 42) — pieza de la versión básica 01 propia de sus derivadas 39 y 42
900076 (2) — pieza de 2,5 mm de grueso
4119159 (+ 0,2) — pieza de 0,2 mm sobremedida
4101758 — conjunto
4118204 (1 pz) — conjunto cuyo despiece se ilustra en el Sgr. A9.02
(...) 4064081 — pieza anterior a la modificación 2180
(...) 4061948 — pieza posterior a la modificación 2180
4074097 — pieza reemplazada (*para los tipos del catálogo*)*
4096821 — pieza anulada (*para todos los tipos*)*
4040000 — errónea*
A3.01, M1.01, — pieza ilustrada en el Sgr. A3.01 M1.01
1, 2, etc. — véase la tabla especial o bien la lista de piezas de repuesto
A, B, etc. —

s — parte izquierda (*)
d — parte derecha (*)
Ø — diametro en mm.

— de algunas piezas se suministran « juegos » « Equipos » etc.

(2210) « vett n 071115 »
significa que la lámina es válida « hasta » el vehículo con numero para recambios 071115 por efecto de la modificación 2210

(2210) vett n 071116 »
significa que la lámina es válida « a partir del » vehículo con numero para recambios 071116, por efecto de la modificación 2210

4 · Tablas « MODIFICACIONES » (*subdivididas por modelo*)

Comprenden todas las modificaciones habidas en los vehículos durante su fabricación. Cómo se incorporaron (*y cuando se estime bien, la ilustración general de la modificación*) y las normas para los recambios.

Notaciones y abreviaturas usadas en las tablas de modificaciones

columna « Modifica » (= *modificaciones*)

C — modifica con num. (*para las piezas antiguas*)
D — modificación num. (*para las piezas ...*)

modelo

vett n — « hasta » el vehículo con num. para recambios
mot n — « hasta » el motor con num.
vett n — « a partir » del vehículo con num. para recambios
mot n — « a partir » del motor con num.
IX 1970 — en el mes de septiembre de 1970

columna « Sgr. interessati » Norme di ricambio » (= *subgrupos afectados por la modificación y normas para los recambios*)

C1 30 · C1 32 · L1 05 · L1 09 — subgrupos afectados por la modificación

Notaciones usadas en las normas para los recambios

4064118 = D 2072 (*para los tipos del catálogo*)
4064118 = D 2072 (*para todos los tipos*)
« coloquente todas las piezas D 2072
4034384 = 4064484 + 4092472 (*para los tipos del catálogo*)
4064484 = 4064484 + 4092472 (*para todos los tipos*)
« coloquente 4064484 y 4092472
4064492 = 4082585 . 4074547 (*para los tipos del catálogo*)
4064492 = 4082585 . 4074547 (*para todos los tipos*)
« coloquese 4082085 anulando 4074547 »

Algun numero — siguen suministrándose recambios de las piezas antiguas

5 · « TABLAS » (*subdivididas por modelo*)

Se reseñan los datos referentes a « Piezas de recambio RIV », « Cables eléctricos », « Terminales y capuchones aislantes de cables eléctricos », etc.

NOTA Los recambios de carrocería se suministran durante la fabricación en serie del vehículo y hasta agotarse las existencias en almacén

CODICI DAT (per uso "Tariffario delle riparazioni")

CODES DAT (à l'usage du "Temps de réparation")

DAT-KENNUMMERN (zum Gebrauch der "Reparatur-Richtsätze")

DAT CODES (to be used for "Service Time Schedule")

CÓDIGOS DAT (para uso del "Tiempos de reparaciones")

codice Sgr	codice DAT	codice Sgr	codice DAT	codice Sgr	codice DAT
A0. 01	100 01	D1. 01	381 01	G0. 01	600 01
02	02	02	02	02	02
A1. 01	101 01	D2. 01	412 01	G1. 01	601 01
02	02	02	02	02	02
A2. 01	102 01	D3. 01	443 01	G2. 01	602 01
02	02	02	02	02	02
A3. 01	103 01	E1. 01	501 01	G3. 01	603 01
02	02	02	02	02	02
A4. 01	104 01	E2. 01	502 01	G4. 01	604 01
02	02	02	02	02	02
A5. 01	105 01	E3. 01	503 01	L1. 01	701 01
02	02	02	02	02	02
B1. 01	181 01	F0. 01	550 01	L2. 01	702 01
02	02	02	02	02	02
B2. 01	212 01	F1. 01	551 01	L3. 01	703 01
02	02	02	02	02	02
B3. 01	243 01	F2. 01	552 01	L4. 01	704 01
02	02	02	02	02	02
B4. 01	274 01	F3. 01	553 01	M1. 01	711 01
02	02	02	02	02	02
C1. 01	331 01	F4. 01	554 01	M2. 01	712 01
02	02	02	02	02	02
C2. 01	332 01	F5. 01	555 01	Z1. 01	901 01
02	02	02	02	02	02
		F6. 01	556 01	Z2. 01	902 01
		02	02	02	02

Nota - Il codice **DAT** (*solo numerico*) viene riportato su tutte le tavole del presente catalogo, in alto a destra a fianco del **codice Sgr.** (*alfa numerico*)

L'Organizzazione assistenziale Fiat (DAT) include questo codice nella numerazione unificata delle operazioni di riparazione e manutenzione di autoveicoli, adottata nel « Tariffario delle riparazioni », per individuare il sottogruppo (Sgr) del catalogo che comprende la parte di ricambio alla quale si riferisce ogni singola operazione assistenziale.

Note - Le code **DAT** (*seulement numérique*) est reporté dans toutes les planches de ce catalogue, en haut à droite à côté du **code de Sgr** (*alfa numérique*).

Le réseau d'après vente Fiat (DAT) comprend ce code dans la numérotation unifiée des opérations de réparation et d'entretien des véhicules adoptée par le « Temps de réparation » pour repérer le sous-groupe (Sgr) du catalogue comprenant la pièce détachée à laquelle chaque opération d'assistance se réfère.

Anmerkung - Auf jeder Bildtafel des Katalogs ist die **DAT Kennummer** (*nur numerisch*) hoch-rechts seitlich der **Utgr.-Kennnummer** (*alphanumerisch*).

Der FIAT-Kundendienst hat die DAT-Kennummer in der normierten Bezeichnung der Kraftfahrzeugreparaturen, im Reparatur Richtsatz angenommen angeführt um die Untergruppe (Sgr) des Katalogs die das Ersatzteil enthält zu ermitteln.

Note - The **DAT code** (*digital only*) is reported on all plates of this catalog on top right along with the **Sgr code** (*alphameric*).

The Fiat service organization (DAT) includes this code in the unified numeration system of maintenance and servicing operations, used for « Service Time Schedule » to identify the subgroup (Sgr) of the catalog which lists the spare as named in each single service operation.

Nota - Se reseña el **código DAT** (*solo numérico*) en todas las tablas del catálogo, arriba a la derecha, al lado del **código Sgr.** (*alfa numérico*).

La organización para la asistencia Fiat (DAT) incluye este código en la numeración unificada de las operaciones de reparación y mantenimiento de los vehículos, la que se adoptó por el « Tiempos de reparaciones », para identificar el subgrupo (Sgr) del catálogo que comprende la pieza de repuesto a la que cada operación de asistencia se refiere.

Abbreviazioni usate nella colonna "**Denominazione**"
(solo nella parte in lingua italiana)

N = numero
SGR = sottogruppo

COMPL = complessivo
D = parte destra (*)
S = parte sinistra (*)
SP = spessore

ANT = anteriore (*)
CENTR = centrale
EST = esterno
FRONT = frontale (*)
INF = inferiore
INT = interno
INTERM = intermedio
LAT = laterale
POST = posteriore (*)
SUP = superiore

1a 2a = 1a, 2a velocità
R M = retromarcia

(C) = accompagnare le ordinazioni con il campione

(*) *rispetto alla direzione di marcia del veicolo*

Abréviations utilisées pour la colonne "**Designation**"
(dans la partie "Denominazione" en italien seulement)

N = numéro
SGR = sous-groupe

COMPL = ensemble
D = pièce droite (*)
S = pièce gauche (*)
SP = épaisseur

ANT = avant (*)
CENTR = central
EST = extérieur
FRONT = frontal (*)
INF = inférieur
INT = intérieur
INTERM = médian
LAT = latéral
POST = arrière (*)
SUP = supérieur

1a 2a = 1re 2me vitesses
R M = marche AR

(C) = joindre un échantillon à la commande

(*) *par rapport au sens de roulement du véhicule*

Abkürzungen auf der Spalte "**Benennung**"
(nur im italienischen Teil "Denominazione")

N = Nummer
SGR = Untergruppe

COMPL = Zusammenbau
D = rechts (*)
S = links (*)
SP = Stärke

ANT = vorn (*)
CENTR = Mittel
EST = aussen
FRONT = von vorn (*)
INF = unten
INT = innen
INTERM = mittler
LAT = seitlich
POST = hinten (*)
SUP = ober

1a 2a = 1 2 Gang
R M = Rückwärtsgang

(C) = der Bestellung ist ein Muster beizufügen

(*) *in Bezug auf die Fahrtrichtung des Fahrzeugs*

Abbreviations used in the "**Description**" column
(only on the Italian section "Denominazione")

N = number
SGR = subgroup

COMPL = assembly
D = right (*)
S = left (*)
SP = thickness

ANT = front (*)
CENTR = center
EST = outer
FRONT = frontal (*)
INF = lower
INT = inner
INTERM = intermediate
LAT = side
POST = rear (*)
SUP = upper

1a 2a = 1st 2nd gear
R M = reverse

(C) = enclose a sample with the order

(*) *determined by facing in the same direction as the driver*

Abreviaturas usadas en la columna "**Denominaciones**"
(solamente en la columna en lengua italiana "Denominazione")

N = número
SGR = subgrupo

COMPL = conjunto
D = parte derecha (*)
S = parte izquierda (*)
SP = espesor grueso

ANT = anterior (*)
CENTR = central
EST = exterior
FRONT = frontal (*)
INF = inferior
INT = interior
INTERM = intermedio
LAT = lateral
POST = posterior (*)
SUP = superior

1a 2a = 1a, 2a velocidades
R M = marcha atrás

(C) = acompañese el pedido la muestra

(*) *respecto de la dirección de la marcha del vehículo*

ELENCO DELLE VERSIONI

Liste des versions
Liste der Ausführungen

Version List
Lista de versiones

X1 9 (128 AS)

Codici numerici No dei codici, Code No Kennummern, Códigos	Tipo Type, Type Typ, Type ▲	VERSIONI BASE	Versions base Grundausführungen	Basic Versions Versiones básicas
	128 AS	Spider guida sinistra	Spider conduite à gauche Spider Linkslenkung	Spider LHD Spider conducción izquierda

Codici numerici No dei codici, Code No Kennummern, Códigos	VARIANTI	Variantes Abgeleitete Typen	Variants Derivadas
28	con disappannamento posteriore	avec désembuage lunette AR mit Entfrostung des Rückwandfensters	with backwindow demisting con sistema para calentar el cristal posterior
30	con cristalli atermici	avec glaces athermiques mit farbgleicher	with tinted glazing con cristales atérmicos

▲ Da rilevare dalla targhetta riassuntiva del veicolo

A lire sur la plaque du constructeur du véhicule
Aus dem « Typ- und Kennummernschild » des Fahrzeugs zu entnehmen.

Quoted on the « Identification Plate » of vehicle
Véase la chapa de matrículas del vehículo

Modifica		Sgr. interessati a Norme di ricambio
(*) C 5149	B 5149 - 21 1973	41.02 ~~4161906~~ - 4325730 + 4325738 + 4325739
(*) C 5235	C 5235	41.08
(*) C 5317	D 5317	41.25 ~~4245704~~ - 4308148 + 4308149 + 4308174 ~~4245703~~ - 4308147 - 4308148 + 4308174

MASTER INDEX

GROUP	GRID
L BODY EXTERIORS	A-1
M BODY INTERIORS	D-1
PARTS LISTS	E-1
ADDITIONAL	E-12 L
ORDERING PARTS	F-2
USE OF CATALOG	F-3/F-7
ENGLISH	F-6
DAT CODES	F-8
ABBREVIATIONS	F-9
VERSION	F-10
MODIFICATION	F-11
PAINT LIST, U.S.A.	F-2/F-4 LOWER
ACCESSORIES, U.S.A.	F-5 LOWER
ACCESSORIES, CANADA	F-6 LOWER

GENERAL INFORMATION

PAINT LIST, U.S.A.	F-2/F-4
ACCESSORIES, U.S.A.	F-5
ACCESSORIES, CANADA	F-6

FIAT PAINT LIST

Code	Color	Touch-Up Part No.	Quart Part No.	Code	Color	Touch-Up Part No.	Quart Part No.
113	Monza Red	9730	9630	223	Yellow	8406	8506
120	Racing Red	9731	9643	233	White	9736	9645
127	Fiat Red	9732	9631	234	Ivory	9737	9649
152	Bright Red	9759	9724	236	Old Ivory	9738	9634
161	Martian Red	9733	9632	238	Champagne	8688	8525
162	Maroon	9760	9660	239	Yellow	9771	9728
163	Pippin Red	8679	8516	241	Colorado Yellow	9739	9635
165	Brick Red	9764	9726	242	Yellow	9757	9657
171	Red	9253	9355	244	Dark Ivory	9261	9360
180	Coral	8404	8504	258	White	9254	9356
184	Red	9258	9364	263	Yellow	9758	9658
187	Pink	8405	8508	272	Chrome Yellow	8412	8513
191	Dark Red	8689	8526	276	Tahitian Yellow	9255	9807
193	Orange	8694	8531	285	Ivory	8691	8528
200	Butterscotch	8687	8524	294	Orange	9756	9656
208	Positano Yellow	9734	9633	297	California Yellow	8685	8522
212	White	9735	9644	299	Sunset Orange	8681	8518
221	Primrose Yellow	8401	8501	304	Light Green	9262	9362

FIAT PAINT LIST

Code	Color	Touch-Up Part No.	Quart Part No.
311	Green	8402	8502
312	Green	8407	8507
316	Lake Green	9765	9727
317	Bottle Green	9761	9659
323	Olive	9740	9636
326	Veridian	9741	9637
329	Medium Green	9250	9352
336	Green	8686	8523
356	Light Green	9252	9354
374	Avocado Green	9260	9359
384	Country Green	9742	9658
388	Dark Green	9743	9646
391	Ocean Green	8698	8493
397	Sea Green	8680	8517
398	Golf Green	8682	8519
400	Blue Metallic	8699	8496
412	Blue Metallic	8695	8497

Code	Color	Touch-Up Part No.	Quart Part No.
411	Periwinkle	9744	9651
425	Light Blue	9757	9805
426	French Blue	9745	9638
434	Blue	9752	9652
449	Dark Blue	9762	9661
452	Light Blue	8408	8509
456	Dark Blue	9746	9653
4[illegible]	Medium Blue	8693	8530
463	Tropical Turquoise	9763	9725
464	Medium Blue	8490	8500
485	Light Blue	8409	8505
487	Mediterranean Blue	8688	8520
489	Medium Blue	9747	9654
493	Horizon Blue	9748	9639
497	Mediterranean Blue	9749	9640
498	Orient Blue	9750	9641
558	Orange	9251	9353

FIAT PAINT LIST

Code	Color	Touch-Up Part No.	Quart Part No.
561	Sand	8410	8510
564	Sahara Beige	9259	9358
577	Beige Metallic	8696	8498
601	Black	9751	9647
604	Lake Gray	9753	9647
605	Londo Black	8413	8512
609	Arctic Gray	9256	9356
614	Lava Gray	9753	9648
[illegible]	Steel Metallic	8697	8499
621	Light Gray	8494	8603
[illegible]	Lime Gray Metallic	8782	8495
624	Medium Gray	9755	9655
664	Medium Gray	9263	8363
664	River Gray	9264	9361
761	Sienna Brown	8411	8511
798	Bronze Metallic	8781	8494
799	Pastel Brown	8684	8521

Code	Color	Touch-Up Part No.	Quart Part No.
---	CLEAR ACRYLIC LACQUER	---	8673

1974 & 1975
X 1/9 ACCESSORIES
U.S.A. ONLY

RADIOS

Astrosonix

AM	8137
AM/FM	8138
AM/FM MPX Stereo	8139
AM/FM Stereo 8-Track	8350
Blaupunkt AM/FM MPX Stereo	8326

FLOOR MATS

Coco Fiber Mats

Brown	8362
Black	8363
Black/Gold	8364
Red	8365
Blue	8366
Green	8367
Tan	8368

Loop/Weave Mats

Charcoal	8369
Red	8370
Green	8371

Rubber Mats 9368

LAMINATE TRIM

Vinyl Shift Pattern	9351
Vinyl Flat Emblem	9355
Walnut Shift Pattern	9356
Walnut Flat Emblem	9368

Door Guards	8291
Engine Heater	8055
Tow Eyes	8071
Trunk & Hood Light Kit	8237
Trim Ring	9824
Luggage Rack	8295
Front Bumper Guard	8290 (1974)
Rear Bumper Guard	8291 (1974)
Armrest	8294 (1974)
Bracket for Tow Hitch	8072 (1974)

RALLYE STRIPES

X 1/9 Black Stripes	8991
X 1/9 Gold Stripes	8994
X 1/9 Silver Stripes	8995
Laser Black Stripes	1194
Decalcomania	[illegible] (1974)
Fabrication Kit for 1975	[illegible]

1974 & 1975

[illegible] X 1/9 ACCESSORIES
CANADA ONLY

Floor Mat Set	1578
Gear Shift Knob	1576
Locking Gas Cap	1989
AM Radio	1901
AM/FM Radio	1902
Radio Installation Kit	1923
Antenna	1612
Antenna Rod (Bobbers Head)	1635
Block Heater	1632
Block Heater Relocated [illegible]	1631
Limited Manufactured [illegible]	1650
Luster Chrome Blades	1677
Racing Stripe X 1/9 (Black)	1669
Racing Stripe X 1/9 (Gold)	1668
Racing Stripe X 1/9 (Silver)	[illegible]
Racing Stripe Lower Tone	1667
[illegible]	[illegible]
[illegible] Bulb	1661

MASTER INDEX
Fiche # 08-W

GROUP	GRID
L BODY EXTERIORS	A-1
M BODY INTERIORS	D-1
PARTS LISTS	E-1
ADDITIONAL	E-12 L
ORDERING PARTS	F-2
USE OF CATALOG	F-3/F-7
ENGLISH	F-6
DAT CODES	F-8
ABBREVIATIONS	F-9
VERSION	F-10
MODIFICATION	F-11
PAINT LIST, U.S.A.	F-2/F-4 LOWER
ACCESSORIES, U.S.A.	F-5 LOWER
ACCESSORIES, CANADA	F-6 LOWER

ROW G- UPPER

MASTER INDEX

GROUP	GRID
L BODY EXTERIORS	A-1
H BODY INTERIORS	D-1
PARTS LISTS	E-1
ADDITIONAL	E-12 L
ORDERING PARTS	F-2
USE OF CATALOG	F-3/F-4
ENGLISH	F-6
DAT CODES	F-8
ABBREVIATIONS	F-9
VERSION	F-10
MODIFICATION	F-11
PAINT LIST, U.S.A.	F-2/F-4 LOWER
ACCESSORIES, U.S.A.	F-5 LOWER
ACCESSORIES, CANADA	F-6 LOWER

ROW G- LOWER

MASTER INDEX
Fiche # 09-W

GROUP	GRID
L BODY EXTERIORS	A-1
M BODY INTERIORS	D-1
PARTS LISTS	E-1
ADDITIONAL	E-12 L
ORDERING PARTS	F-2
USE OF CATALOG	F-3/F-7
ENGLISH	F-6
DAT CODES	F-8
ABBREVIATIONS	F-9
VERSION	F-10
MODIFICATION	F-11
PAINT LIST, U.S.A.	F-2/F-4 LOWER
ACCESSORIES, U.S.A.	F-5 LOWER
ACCESSORIES, CANADA	F-6 LOWER

ROW H- UPPER

MASTER INDEX

GROUP	GRID
L BODY EXTERIORS	A-4
M BODY INTERIORS	D-1
PARTS LISTS	E-1
ADDITIONAL	E-12 L
ORDERING PARTS	F-2
USE OF CATALOG	F-3/F-7
ENGLISH	F-6
DAT CODES	F-8
ABBREVIATIONS	F-9
VERSION	F-10
MODIFICATION	F-11
PAINT LIST, U.S.A.	F-2/F-4 LOWER
ACCESSORIES, U.S.A.	F-5 LOWER
ACCESSORIES, CANADA	F-6 LOWER

This document was downloaded free from

www.iw1axr.eu/carmanual.htm

Questo documento è stato scaricato gratuitamente da

www.iw1axr.eu/auto.htm