Model : Spare Parts MURCIELAGO SV LP 670-4 Market: USA MY 2010

Group : 611-BRAKE SYSTEM

Table : 611.02.00-ELECTROHYDRAULIC ABS CU

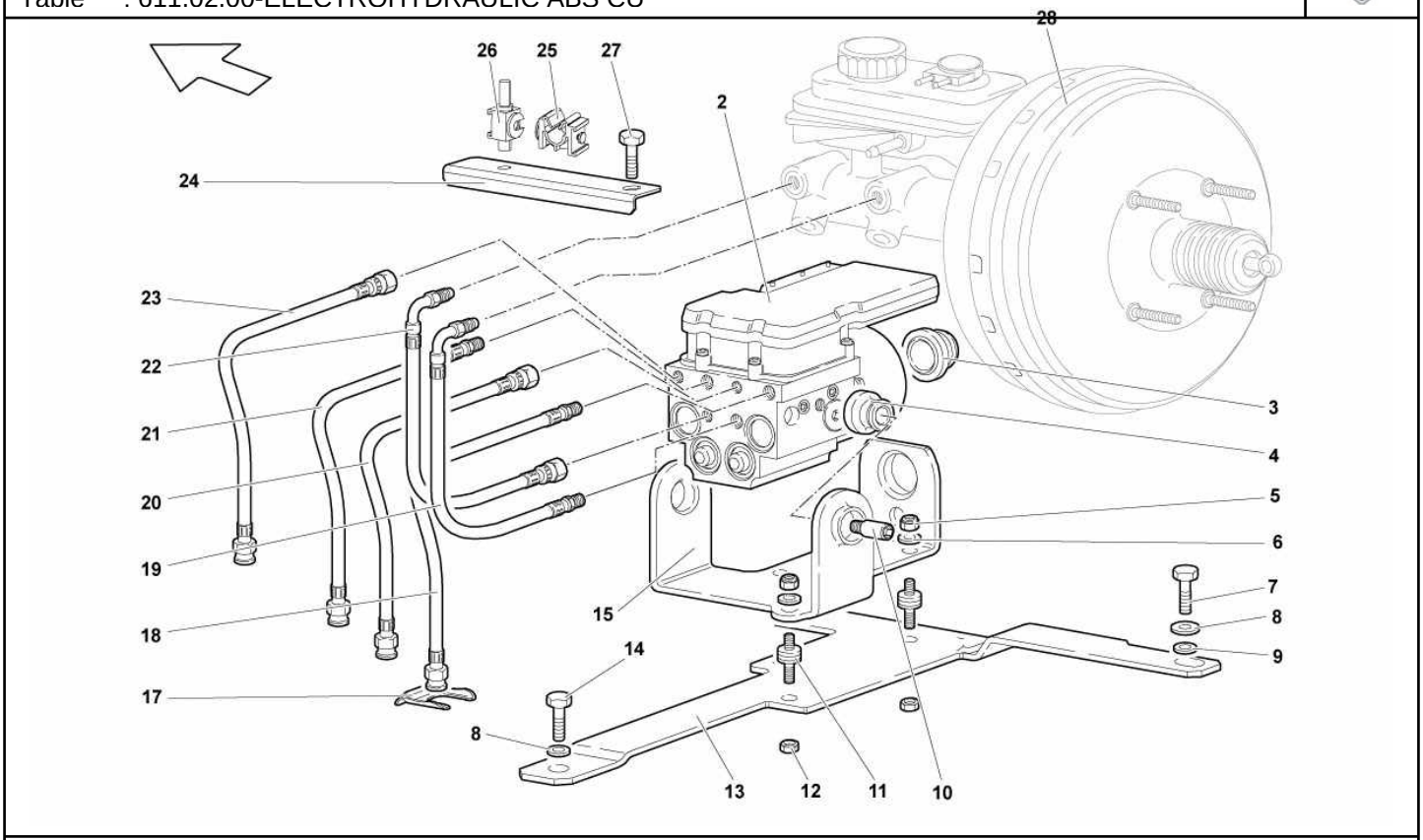

Ref.	Code	Q.ty	Description
2	410614517	1	ABS CONTROL UNIT
3	410614128	1	FLEXIBLE SUPPORT
4	410614125	2	FLEXIBLE SUPPORT
5	N 01100637	3	NUT M6
6	WHT003213	3	WASHER
7	N 10517304	2	SCREW M8X22
8	N 90179103	3	WASHER
9	N 0152785	2	WASHER
10	410614187	2	JOURNAL
11	400972081C	3	FLEXIBLE SUPPORT
12	N 01118312	3	NUT M6
13	413614138A	1	SUPPORT
14	N 10536103	1	SCREW M8X16
15	410614143A	1	BRACKET
17	191611715	1	PLATE
18	413611761C	1	LEFT FRONT FLEXIBLE HOSE
19	413614739B	1	HOSE
20	413611762B	1	RIGHT FRONT FLEXIBLE HOSE
21	413611763C	1	LEFT REAR FLEXIBLE HOSE
22	413614740B	1	HOSE
23	413611764C	1	RIGHT REAR FLEXIBLE HOSE
24			SUPPORT (FOR RHD VERSIONS)
25			CLAMP (FOR RHD VERSIONS)
26			CLAMP (FOR RHD VERSIONS)
27			SCREW M6X12 (FOR RHD VERSIONS)
28			POWER BRAKE (SEE TABLE 611.03.00)

Model : Spare Parts MURCIELAGO SV LP 670-4 Market: USA MY 2010

Group : 012-ACCESSORIES

Table : 012.01.00-ACCESSORIES

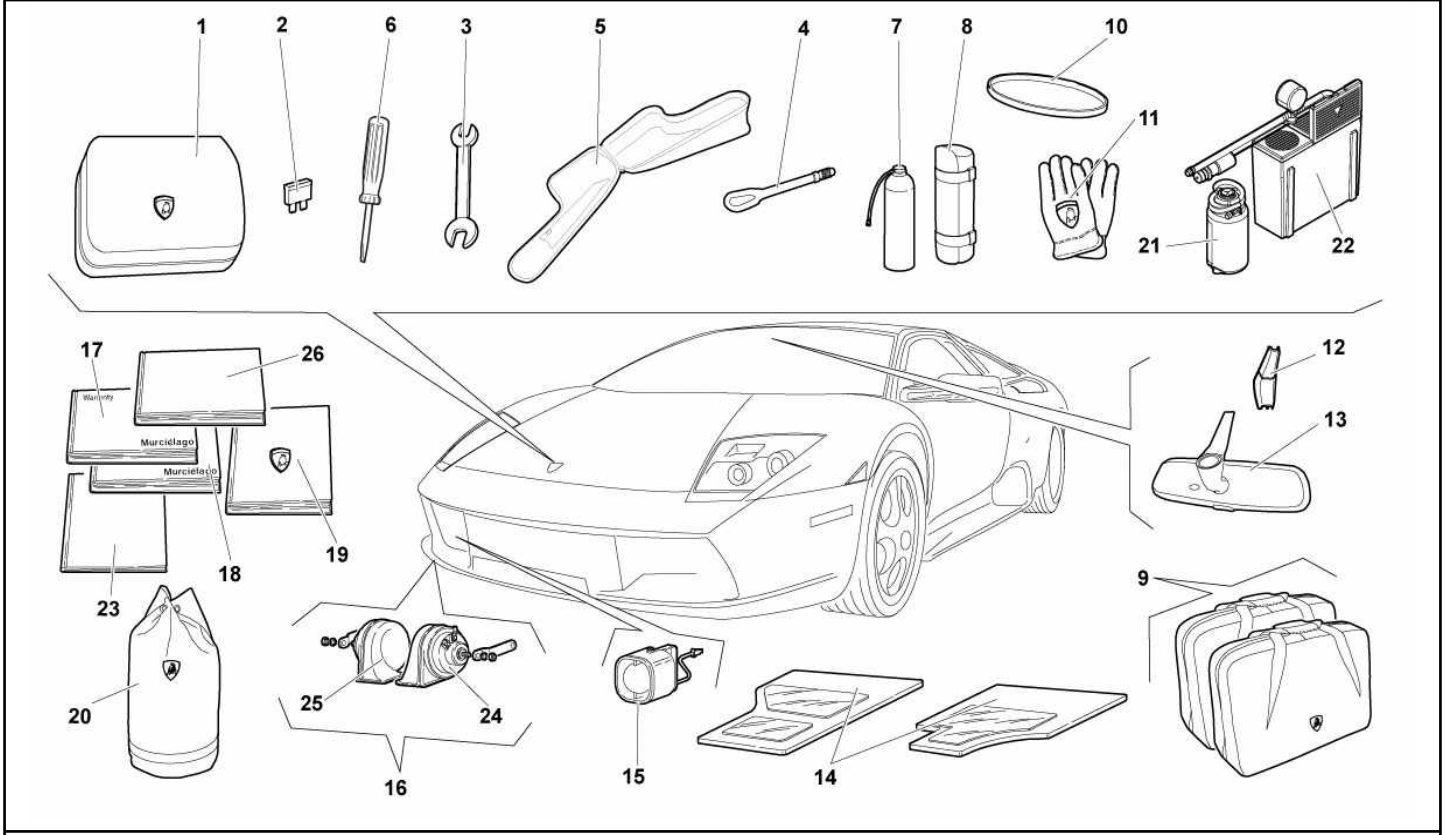

Ref.	Code	Q.ty	Description
1	410012115C	1	EMPTY TOOLKIT
2	N 01713118	1	7,5 A FUSE
2	N 01713111	1	10 A FUSE
2	N 01713112	1	15 A FUSE
2	N 01713113	1	20 A FUSE
2	N 01713114	1	25 A FUSE
2	N 01713115	1	30 A FUSE
2	N 01713120	1	40 A FUSE
3	N 0300574	1	MONKEY WRENCH
4	400803615	1	HOOK
5			EMPTY TOOLKIT (VALID UP TO MODEL YEAR 07)
6	400012255B	1	SCREWDRIVER
7	0R1400135		TYRE-REPAIRING CYLINDER
8			CYLINDER CASING (NO LONGER AVAILABLE)
9	410860863A	1	SUITCASE SET (BLACK)
9	410860863	1	SUITCASE SET (BROWN)
10			BELT (VALID UP TO MODEL YEAR 07)
11	400012029	1	GLOVES
12	4B0857593	1	ORNAMENT
13	418857511	1	REAR VIEW MIRROR
14	429863691B	1	REMOVABLE CARPET KIT LP 670-4 (SUPPLY VIN)
15	410951605A	1	ANTITHEFT
16		1	FANFARE HORN KIT (COMPONENT SALEABLE APART ONLY - SEE REF. 24 - 25)
17	410012005AL	1	WARRANTY BOOKLET
18	418012003AT	1	OWNER'S MANUAL - ENGLISH
19	400012103	1	BRIEFCASE
20	4298606355A	1	VEHICLE COVER SET (OPTIONAL FOR HIGH REAR WING)

Model : Spare Parts MURCIELAGO SV LP 670-4 Market: USA MY 2010

Group : 012-ACCESSORIES

Table : 012.01.00-ACCESSORIES

Ref.	Code	Q.ty	Description
20	429860635	1	VEHICLE COVER SET (STANDARD FOR REAR SPOILER)
21	8P0012619	1	BOTTLE, TYRE REPAIR
22	8P0012615A	1	COMPRESSOR
23			MANUAL SOFT-TOP (NOT FOR LP640 COUPÉ MODEL)
24	400951206D	1	HORN (HIGH TONE)
25	400951206C	1	HORN (LOW TONE)
26	400012008	1	ROADSIDE ASSISTANCE U.S.A. MANUAL

Model : Spare Parts MURCIELAGO SV LP 670-4 Market: USA MY 2010

Group : 820-AIR CONDITIONING SYSTEM

Table : 820.01.00-AIR CONDITIONING SYSTEM

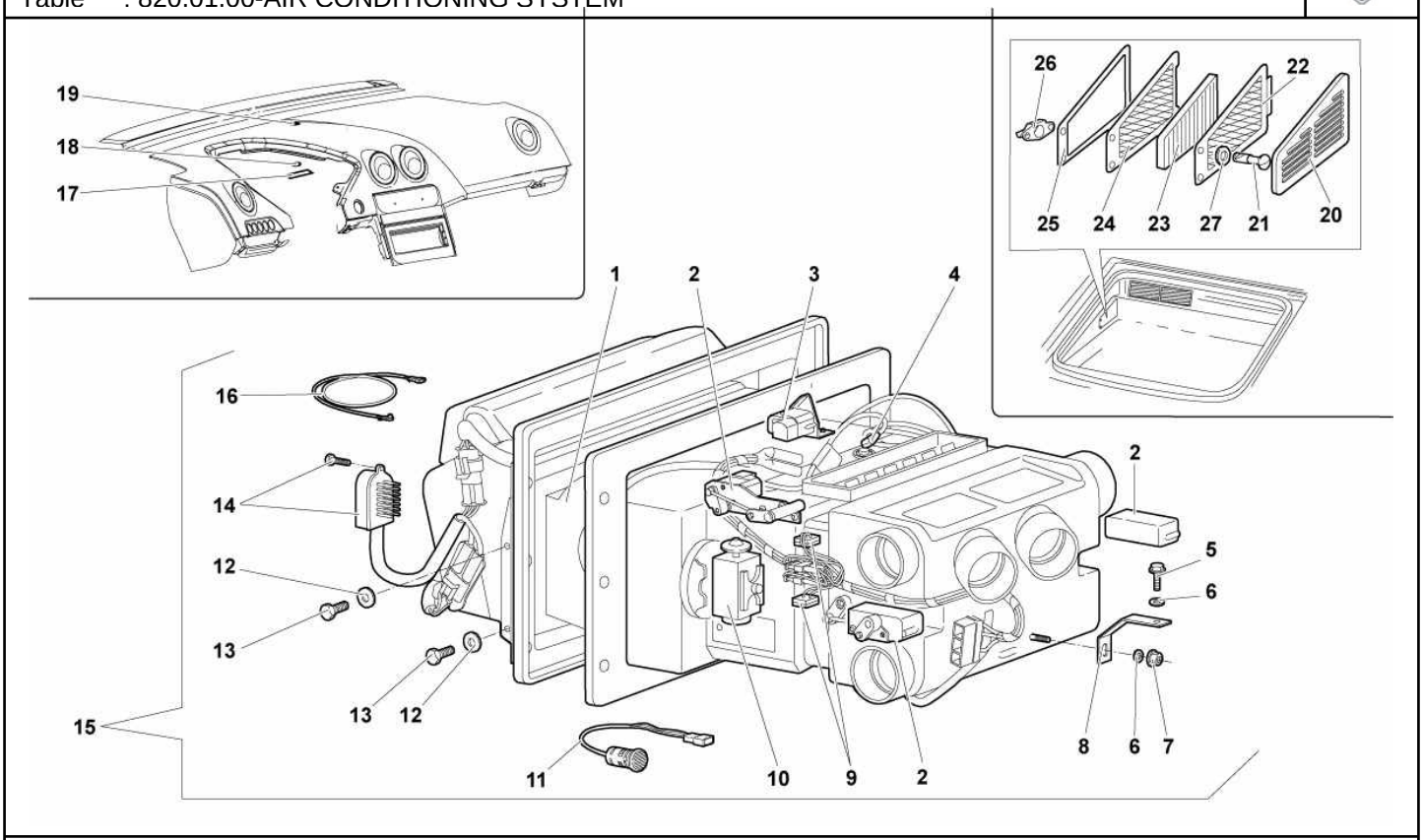

Ref.	Code	Q.ty	Description
1	0045006734	1	ELECTRIC FAN
2	0045006737	3	ACTUATOR
3	0045006736	1	ACTUATOR
4	0045006731	1	SENSOR
5	N 90319404	1	SCREW M6X12
6	WHT002961	2	WASHER
7	N 01508213	1	NUT M6
8	410804949	1	BRACKET
9	0045006730	2	CA.0005430.C TEMPERATURE SENSOR
10	0045006735	1	VALVE
11	410820539	1	INTERNAL TEMPERATURE SENSOR
12	N 01152427	4	WASHER
13	008100501	4	SCREW
14	0045006742	1	REGULATOR
15	413820155A	1	HVAC UNIT
16	410820535	2	EXTERNAL TEMPERATURE SENSOR
17	410820200	1	0681762 SOLAR SENSOR BRACKET
18	410820530	1	RING
19	410907539	1	SENSOR
20	410806229A	1	LEFT COVERING
20	410806230A	1	RIGHT COVERING
21	410805083A	4	JOURNAL
22	410805391	1	LEFT CLOSING GRID
22	410805392	1	RIGHT CLOSING GRID
23	410820367A	2	AIR FILTER
24	410805396	1	LEFT SUPPORT
24	410805395	1	RIGHT SUPPORT
25	410805230	1	LH GASKET

Model : Spare Parts MURCIELAGO SV LP 670-4 Market: USA MY 2010

Group : 820-AIR CONDITIONING SYSTEM

Table : 820.01.00-AIR CONDITIONING SYSTEM

Ref.	Code	Q.ty	Description
25	410805349	1	RH GASKET
26	410805084	4	FASTENER
27	410805964	4	WASHER

Model : Spare Parts MURCIELAGO SV LP 670-4 Market: USA MY 2010

Group : 260-AIR CONDITIONING SYSTEM

Table : 260.02.00-AIR CONDITIONING SYSTEM

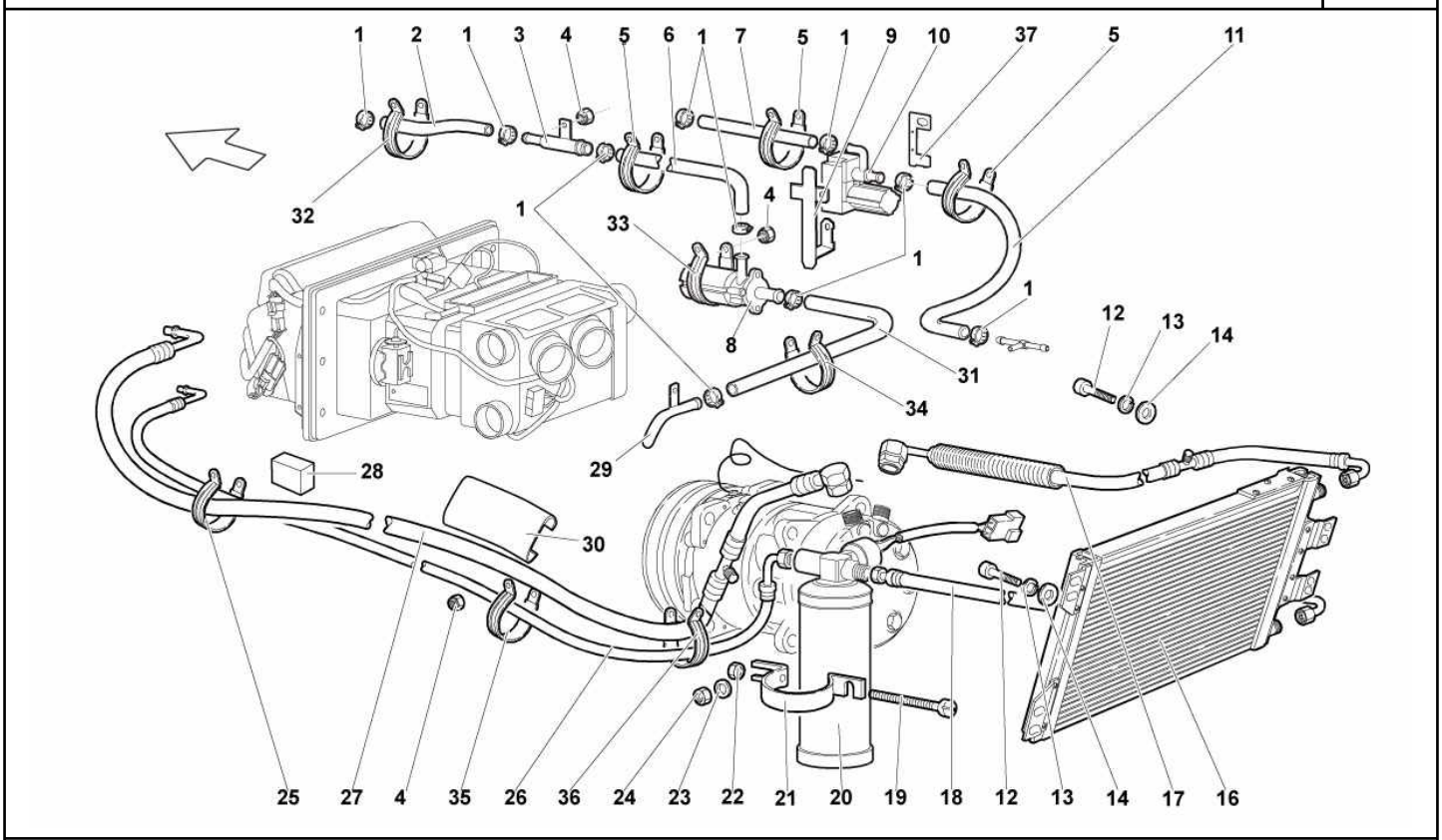

Ref.	Code	Q.ty	Description
1	N 90409501	10	CLAMP
2	07M121127	1	SLEEVE
3	410819377B	1	CONNECTOR
4	N 01118312	11	NUT M6
5	N 0206253	1	CLAMP
6	410819370	1	SLEEVE
7	413819371	1	SLEEVE
8	410819025	1	PUMP
9	410260761B	1	SUPPORT
10	410260155	1	SOLENOID VALVE
11	410819372	1	SLEEVE
12	N 90612002	4	SCREW M6X14
13	WHT001197A	4	WASHER
14	WHT002961	4	WASHER
16	410260401A	1	A/C CONDENSER
17	410260701A	1	PIPE
18	410260710	1	PIPE
20	410820193A	1	DEHYDRATOR FILTER
21	410820140A	1	CLAMP
22	N 0211963	1	NUT M5
23	N 90179103	2	WASHER 18X8,4X2,5
24	N 01118410	2	NUT M8
25	N 90942301	1	CLAMP
26	413260709A	1	PIPE
27	413260740A	1	PIPE
28	410817432	1	PROTECTION
29	410819159C	1	INTERMEDIATE JOINT
30	410819818	2	PROTECTION

Model : Spare Parts MURCIELAGO SV LP 670-4 Market: USA MY 2010

Group : 260-AIR CONDITIONING SYSTEM

Table : 260.02.00-AIR CONDITIONING SYSTEM

Ref.	Code	Q.ty	Description
31	410819362	1	SLEEVE
32	N 0206253	1	CLAMP
33	N 91123701	1	CLAMP
34	N 10139406	2	CLAMP
35	N 10070503	3	CLAMP
36	N 90942301	2	CLAMP
37	400326138A	1	SUPPORT

Model : Spare Parts MURCIELAGO SV LP 670-4 Market: USA MY 2010

Group : 260-AIR CONDITIONING SYSTEM

Table : 260.01.00-AIR CONDITIONING SYSTEM

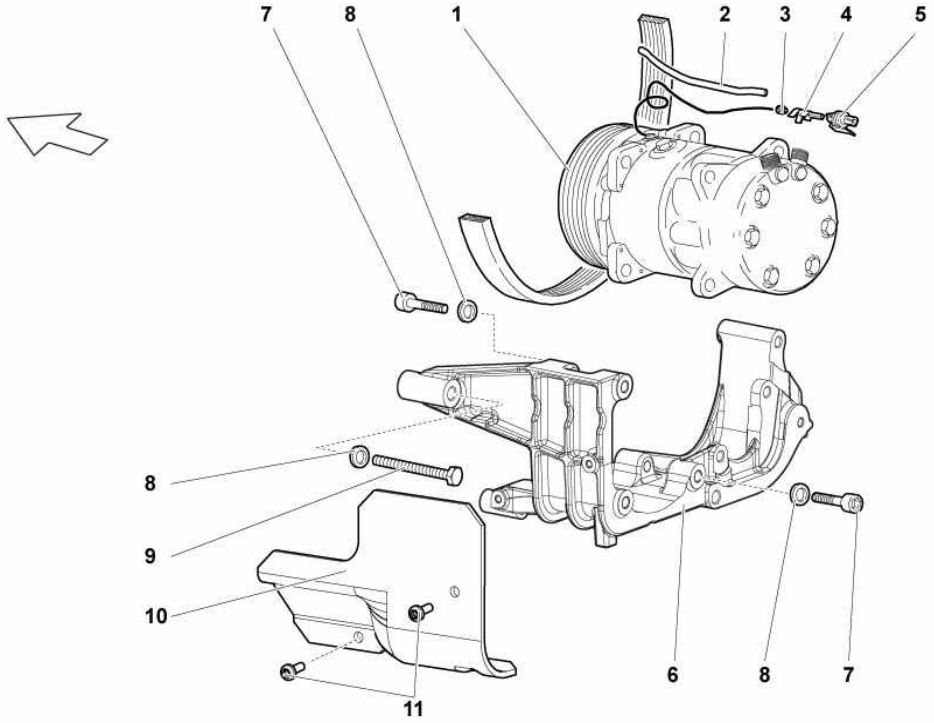

Ref.	Code	Q.ty	Description
1	410260805A	1	COMPRESSOR
2	410260193	1	SHEATH
3	410971919	1	RUBBER
4	410971996	1	TAB
5	410971833	1	CONNECTION
6	07M145169D	1	BRACKET
7	N 90941703	6	SCREW M10X45
8	N 0115609	7	WASHER
9	N 10682801	1	SCREW M10X75
10	410145325B	1	PROTECTION
11	N 10451404	3	SCREW M6X16

Model : Spare Parts MURCIELAGO SV LP 670-4 Market: USA MY 2010

Group : 133-AIR FILTER BOX

Table : 133.01.00-AIR FILTER BOX

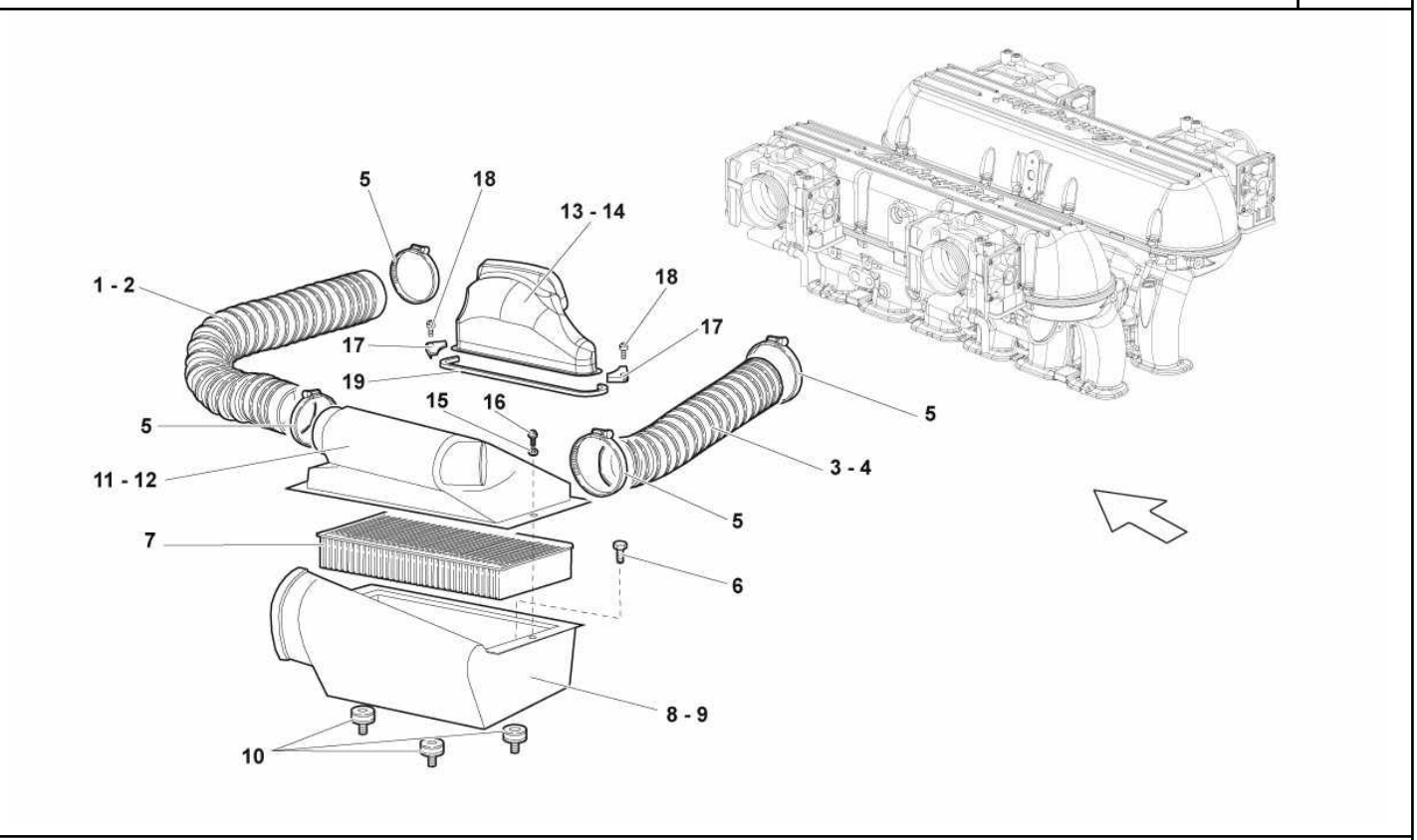

Ref.	Code	Q.ty	Description
1	07M129627	1	PIPE (LEFT)
2	07M129627	1	PIPE (RIGHT-HAND)
3	07M129627	1	PIPE (LEFT)
4	07M129627	1	PIPE (RIGHT-HAND)
5	N 0245034	8	CLAMP
6	N 0902324	6	SCREW M6X10
7	07M133843A	2	FILTERING CARTRIDGE
8	07M133837	1	LOWER LH AIR FILTER CASE
10	07L133741	6	SUPPORT
11	07M133919	1	LH COVER
12	07M133920	1	RH COVER
13		1	LH CONVEYOR (NOT FOR LP640 COUPÉ MODEL)
14		1	RH CONVEYOR (NOT FOR LP640 COUPÉ MODEL)
15	N 01166623	6	WASHER
16	WHT003074	6	SCREW (M6X22)
17			STOP (NOT FOR LP640 COUPÉ MODEL)
18			SCREW (NOT FOR LP640 COUPÉ MODEL)
19			GASKET (NOT FOR LP640 COUPÉ MODEL)

Model : Spare Parts MURCIELAGO SV LP 670-4 Market: USA MY 2010

Group : 853-SIDE MEMBERS - AIR INTAKE

Table : 853.03.00-AIR INTAKE

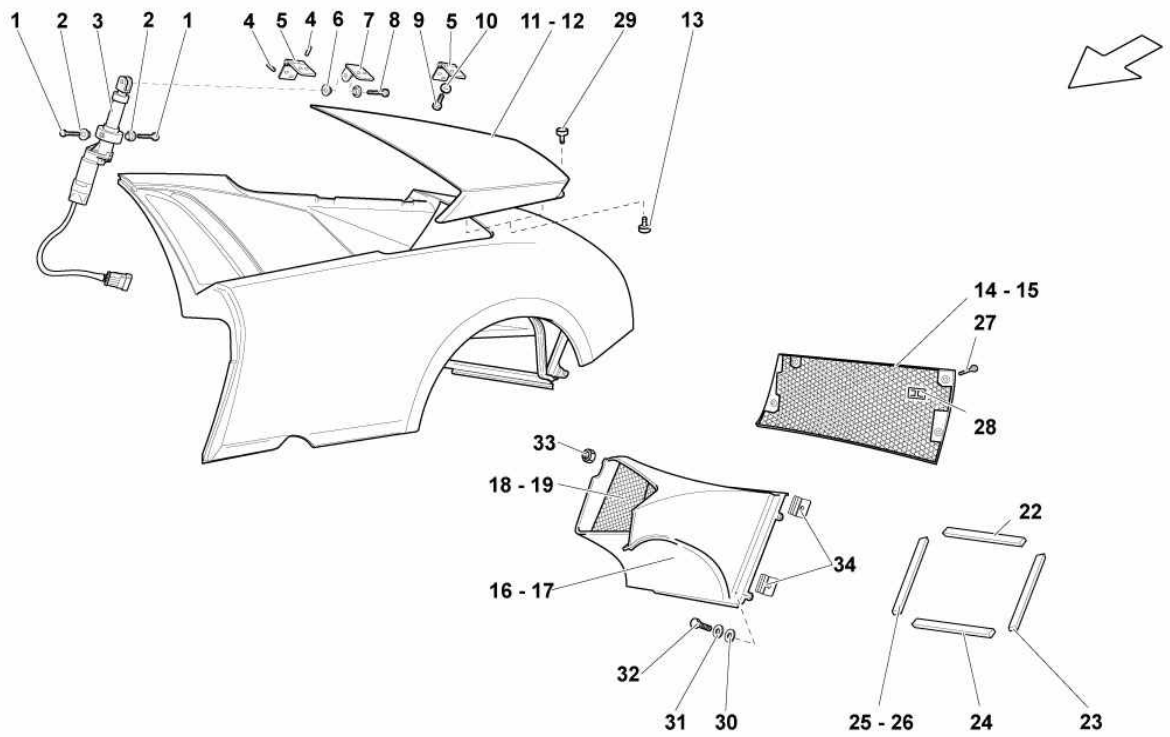

Ref.	Code	Q.ty	Description
1	WHT003293	2	SCREW
2	410810967	2	BUSHING
3	410901119	1	CABLED MOTOR
4	N 10073601	8	PIN 3X14
5	410814525	4	MOVABLE AIR INTAKE HINGE ASSEMBLY
6	410827547	2	BUSHING 8X14X6
7	410119185	1	BRACKET
8	410827855	1	JOURNAL
9	N 01020717	8	SCREW M5X12
10	N 10612001	8	WASHER
11	429119361	1	LEFT MOVABLE AIR INTAKE ASSEMBLY
12	429119362	1	RIGHT MOVABLE AIR INTAKE ASSEMBLY
13	410853809	2	PAWL
14	429807684	1	RIGHT REAR GRID ON BUMPERS
15	429807683	1	LEFT REAR GRID ON BUMPERS
16	410121282	1	WATER RADIATOR RIGHT CONVEYOR ASSEMBLY
17	410121281	1	WATER RADIATOR LEFT CONVEYOR ASSEMBLY
18	410121556	1	RH NET
19	410121555	1	LH NET
22	410121221D	1	LEFT GASKET TOP CONVEYOR
22	410121221A	1	RIGHT GASKET TOP CONVEYOR
23	410121221C	2	GASKET CONVEYOR
24	410121221B	2	GASKET BOTTOM CONVEYOR
25	410121221	1	GASKET LEFT CONVEYOR
26	410121221E	1	GASKET RIGHT CONVEYOR
27	N 90986803	8	SCREW 4.2X13
28	N 0154523	8	CLIP
29	410807895	3	PLUG

Model : Spare Parts MURCIELAGO SV LP 670-4 Market: USA MY 2010

Group : 853-SIDE MEMBERS - AIR INTAKE

Table : 853.03.00-AIR INTAKE

Ref.	Code	Q.ty	Description
30	WHT002961	4	WASHER
31	WHT002963	6	WASHER
32	N 90612002	6	SCREW
33	N 01508213	2	NUT M6
34			BRACKET (SEE TABLE 121.04.00 - 6 - 33)

Model : Spare Parts MURCIELAGO SV LP 670-4 Market: USA MY 2010

Group : 903-ALTERNATOR

Table : 903.01.00-ALTERNATOR

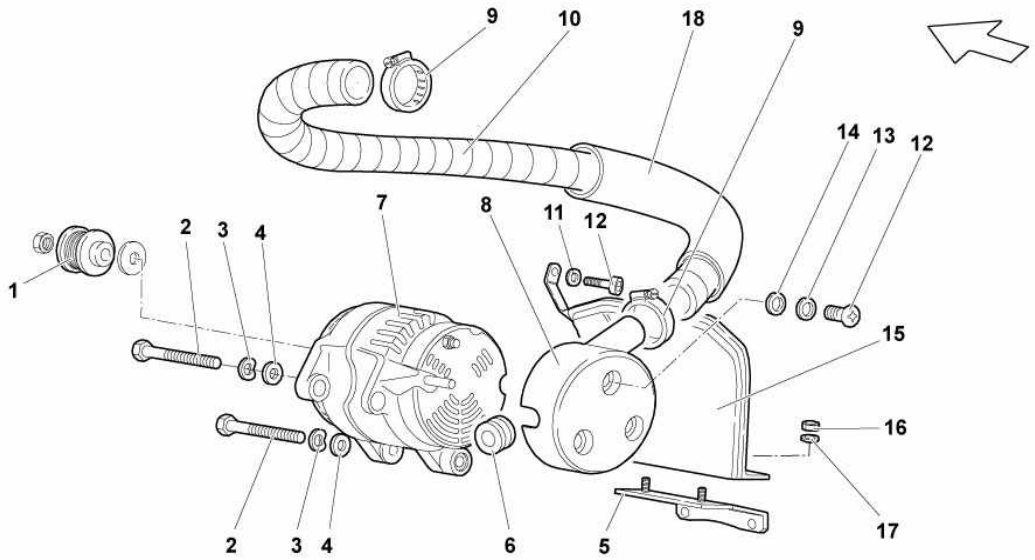

Ref.	Code	Q.ty	Description
1		1	PULLEY (VALID FOR A MODEL YEAR 07)
2	N 90707502	2	SCREW M8X100X41
3	WHT001397	2	WASHER
4	WHT000771	2	WASHER
5	07M903103A	1	BRACKET
6			FAIRLEAD (VALID FOR A MODEL YEAR 07)
7	07M903015B	1	ALTERNATOR
8	410903421A	1	CONVEYOR
9	N 0245022	2	CLAMP
10	07M903667	1	PIPE
11	WHT001514	1	WASHER
12	410903148A	3	SCREW
12	N 91143901	1	SCREW M8X16
13			WASHER (VALID FOR A MODEL YEAR 07)
14			WASHER (VALID FOR A MODEL YEAR 07)
15	07M103653A	1	PROTECTION
16	N 01508213	2	NUT
17	WHT003042	2	WASHER
18	07M903193	1	INSULATION

Model : Spare Parts MURCIELAGO SV LP 670-4 Market: USA MY 2010

Group : 199-IMPLANTATIONS WITH SUSPENSIONS

Table : 199.01.00-IMPLANTATIONS WITH SUSPENSIONS

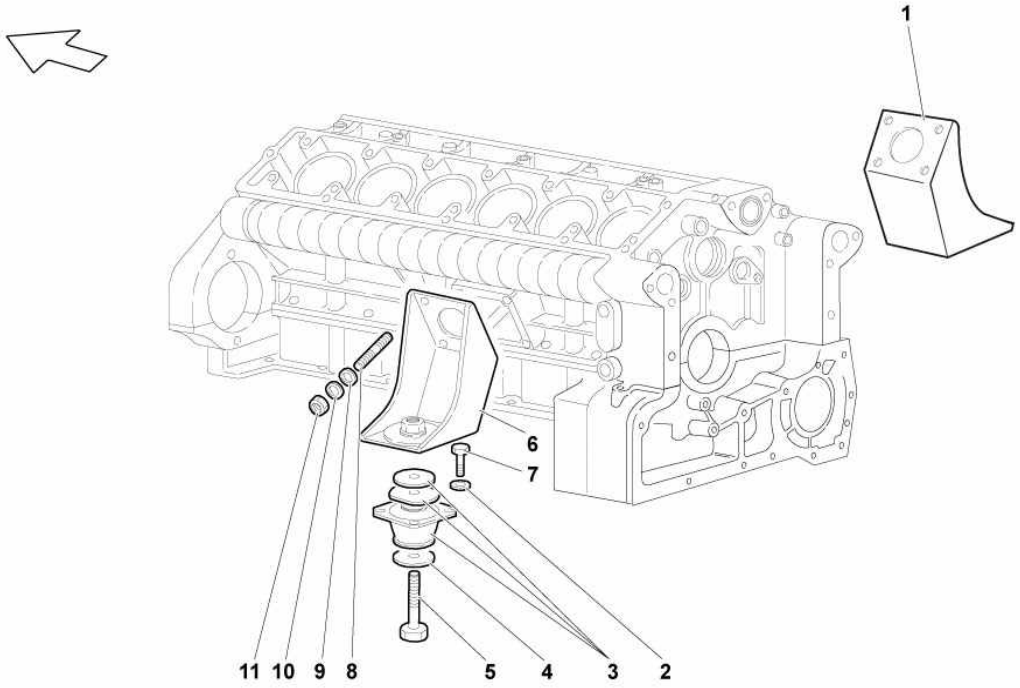

Ref.	Code	Q.ty	Description
1	410813209	1	SUPPORT
2			WASHER (VALID UP TO MODEL YEAR 07)
3	400199703A	2	FLEXIBLE SUPPORT
4	N 91089301	2	WASHER
5	WHT000776	2	SCREW M16X112
6	410813210	1	SUPPORT
7	N 90630504	8	SCREW M10X22
8	WHT003029	8	STUD BOLT M8X75
9	N 90179103	8	WASHER 18X8,4X2,5
10	WHT000771	8	WASHER
11	N 01100845	8	NUT M8X1,25X8

Model : Spare Parts MURCIELAGO SV LP 670-4 Market: USA MY 2010

Group : 611-BRAKE SYSTEM

Table : 611.01.00-BRAKE SYSTEM

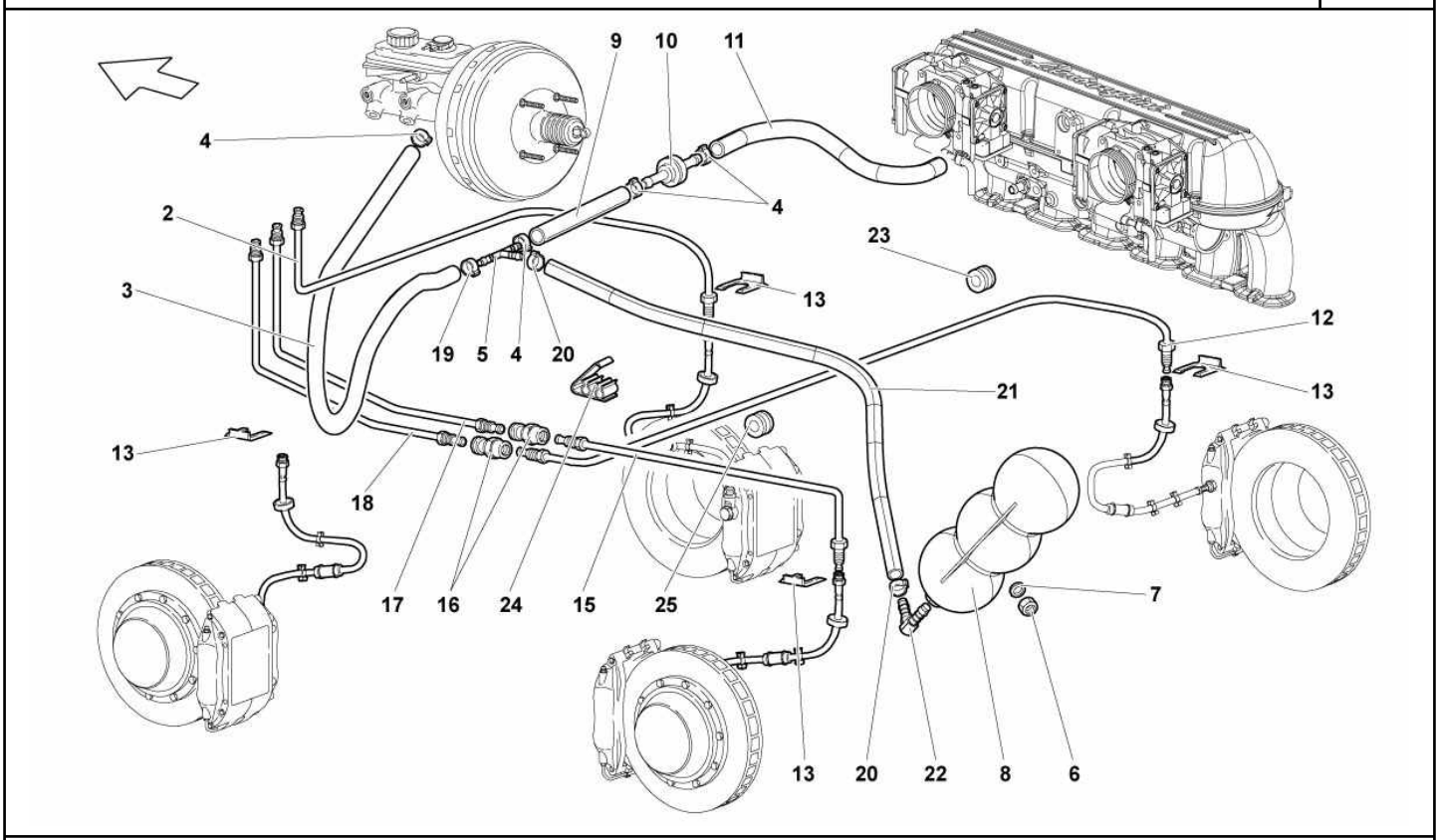

Ref.	Code	Q.ty	Description
2	410611724B	1	RIGHT PIPE
3	413611971A	1	BRAKE BOOSTER/VACUUM FLEXIBLE HOSE
4	N 10201901	4	CLAMP
5	400611921	1	CONNECTOR
6	WHT003112	2	NUT
7	WHT003040	2	WASHER
8	443131541	1	VACUUM TANK
9	401611971A	1	PIPE FROM VALVE TO VACUUM TANK
10	410616807	1	VALVE
11	410611937A	1	VACUUM MANIFOLD BRANCH PIPE
12	410611748B	1	RIGHT CALIPER FLEXIBLE/CONNECTION HOSE
13	191611715	4	PLATE
15	410611747B	1	LEFT CALIPER FLEXIBLE/CONNECTION HOSE
16	400611809	2	CONNECTOR
17	410611745B	1	LEFT CENTRAL/CONNECTION PIPE
18	410611746B	1	RIGHT CENTRAL/CONNECTION PIPE
19	N 0245097	1	CLAMP
20	400251189E	1	CLAMP
21	410611939	1	HOSE
22	400612173	1	CONNECTOR
23	400820287	1	FAIRLEAD 18,5X25X1,5
24	1H0611797	1	SUPPORT
25	410801988	1	FAIRLEAD 12X20X1,5

Model : Spare Parts MURCIELAGO SV LP 670-4 Market: USA MY 2010

Group : 863-PASSENGER COMPARTMENT TRIMS

Table : 863.04.00-COCKPIT CARPETS

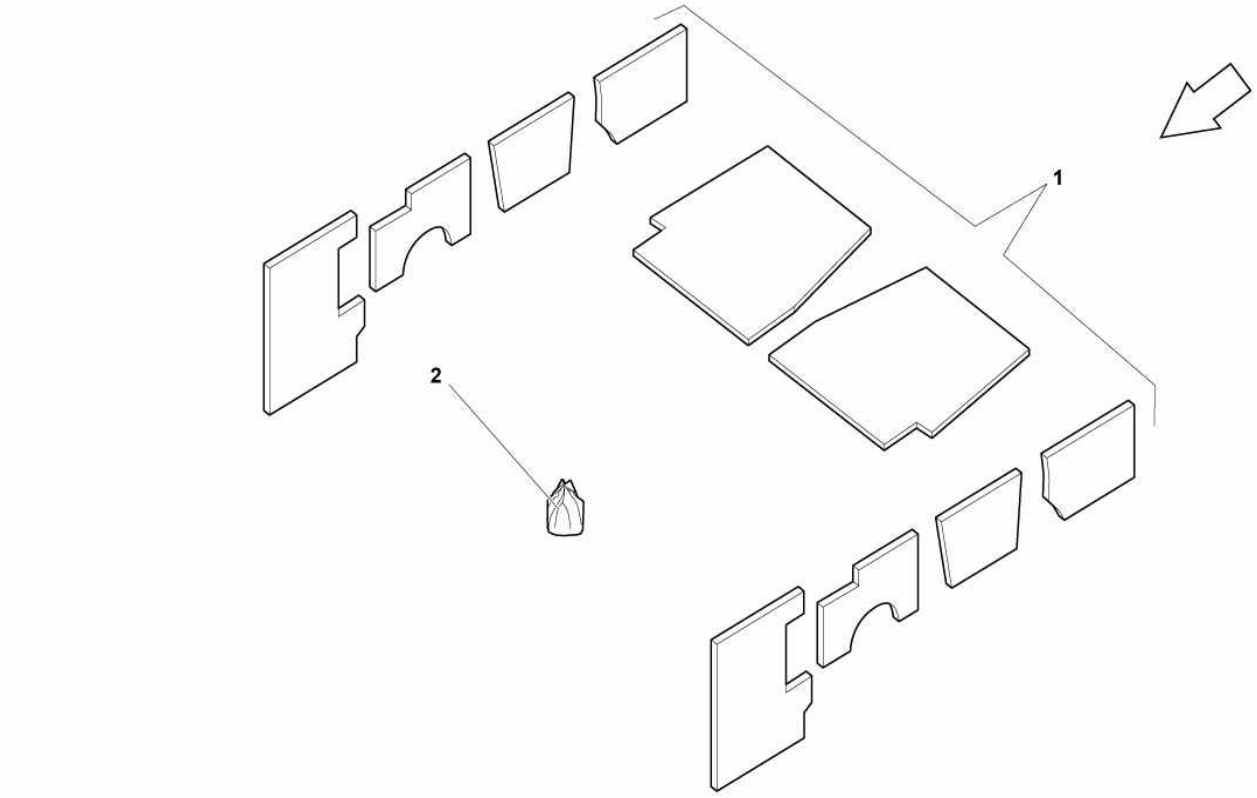

Ref.	Code	Q.ty	Description
1	418863368E	1	PASS.COMP. FLOOR MAT KIT - WITH 3 POINTS STICHING (TO ORDER TOGETHER WITH THE REF. 2 OF THE TABLE 863.04.00 - SUPPLY VIN)
1	429863368B	1	PASS.COMP. FLOOR MAT KIT - WITH 4 POINTS STICHING (TO ORDER TOGETHER WITH THE REF. 2 OF THE TABLE 863.04.00 - SUPPLY VIN)
2	418864811A	1	SELF-ADHESIVE SUPPORT KIT (TO ORDER TOGETHER WITH THE REF. 1 OF THE TABLE 863.04.00 - SUPPLY VIN)

Model : Spare Parts MURCIELAGO SV LP 670-4 Market: USA MY 2010

Group : 141-CLUTCH

Table : 141.02.00-CLUTCH (E-GEAR)

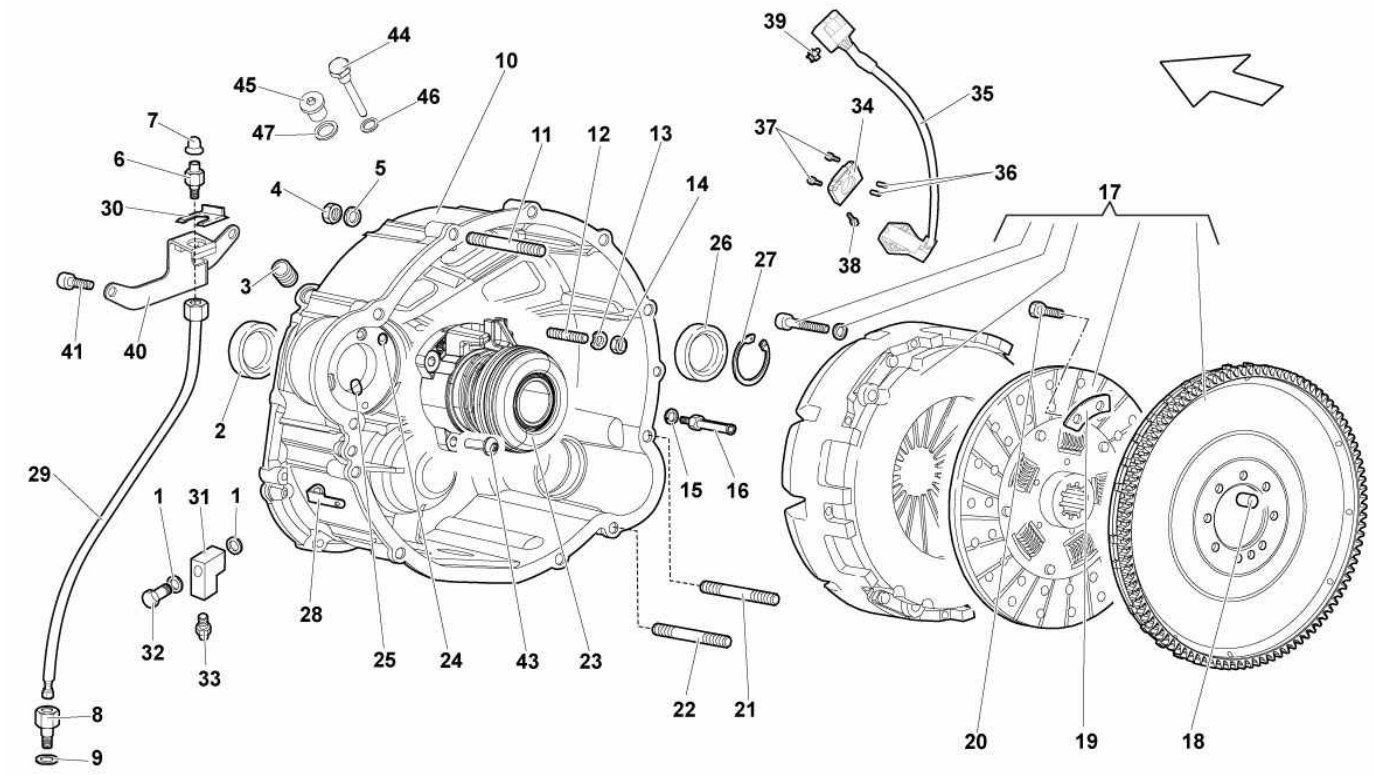

Ref.	Code	Q.ty	Description
1			WASHER (VALID UP TO MODEL YEAR 09)
2			SEAL RING (VALID UP TO MODEL YEAR 09)
3			HELI-COIL (VALID UP TO MODEL YEAR 09)
4	N 01100845	10	NUT
5	WHT000771	16	WASHER
6	1J0615273	1	BLEEDER SCREW
7	086301147	1	BOOT
8	086323173C	1	CONNECTOR
9	WHT002219	1	SEAL RING
10	086323209K	1	CLUTCH HOUSING
11	WHT003027	11	STUD BOLT M8X35
12	WHT002942	3	STUD BOLT M6X18
13	WHT003213	3	WASHER
14	N 01100637	2	NUT
15			WASHER (VALID UP TO MODEL YEAR 09)
16			ANTIROTATION BAR HOLD (VALID UP TO MODEL YEAR 09)
17	07M105269	1	BALANCED MECHANISM CLUTCH
18	WHT003078	1	DOWEL
19	410141179	4	PLATE
20	WHT002951	8	SCREW M8X1,25X23
21	WHT002944	2	STUD BOLT M8X50
22	WHT003166	1	STUD BOLT M8X40
23	086141671D	1	THRUST BEARING
24	WHT002218	1	SEAL RING
25	N 90111302	1	SEAL RING
26	086311819	1	SEAL RING
27	WHT003580	1	RETAINING RING
28	410911085A	1	BRACKET

Model : Spare Parts MURCIELAGO SV LP 670-4 Market: USA MY 2010

Group : 141-CLUTCH

Table : 141.02.00-CLUTCH (E-GEAR)

Ref.	Code	Q.ty	Description
29	086323179A	1	HOSE
30	191611715	1	PLATE
31			BLOCK (VALID UP TO MODEL YEAR 09)
32			SCREW (VALID UP TO MODEL YEAR 09)
33	086325274A	1	CONNECTOR
34	086141305	1	SUPPORT
35	086141297	1	CLUTCH SENSOR
36	N 10421101	2	PIN
37	N 10295402	2	SCREW
38	N 90659905	2	SCREW
39	410972846	2	SUPPORT
40	086323131A	1	BRACKET
41	N 91065401	2	SCREW
43	N 10124306	3	SCREW M6X20
44	086323961	1	PLUG
45	N 0160276	1	PLUG
46	N 0138302	1	WASHER
47	N 0138494	1	WASHER

Model : Spare Parts MURCIELAGO SV LP 670-4 Market: USA MY 2010

Group : 141-CLUTCH

Table : 141.01.00-CLUTCH (MANUAL)

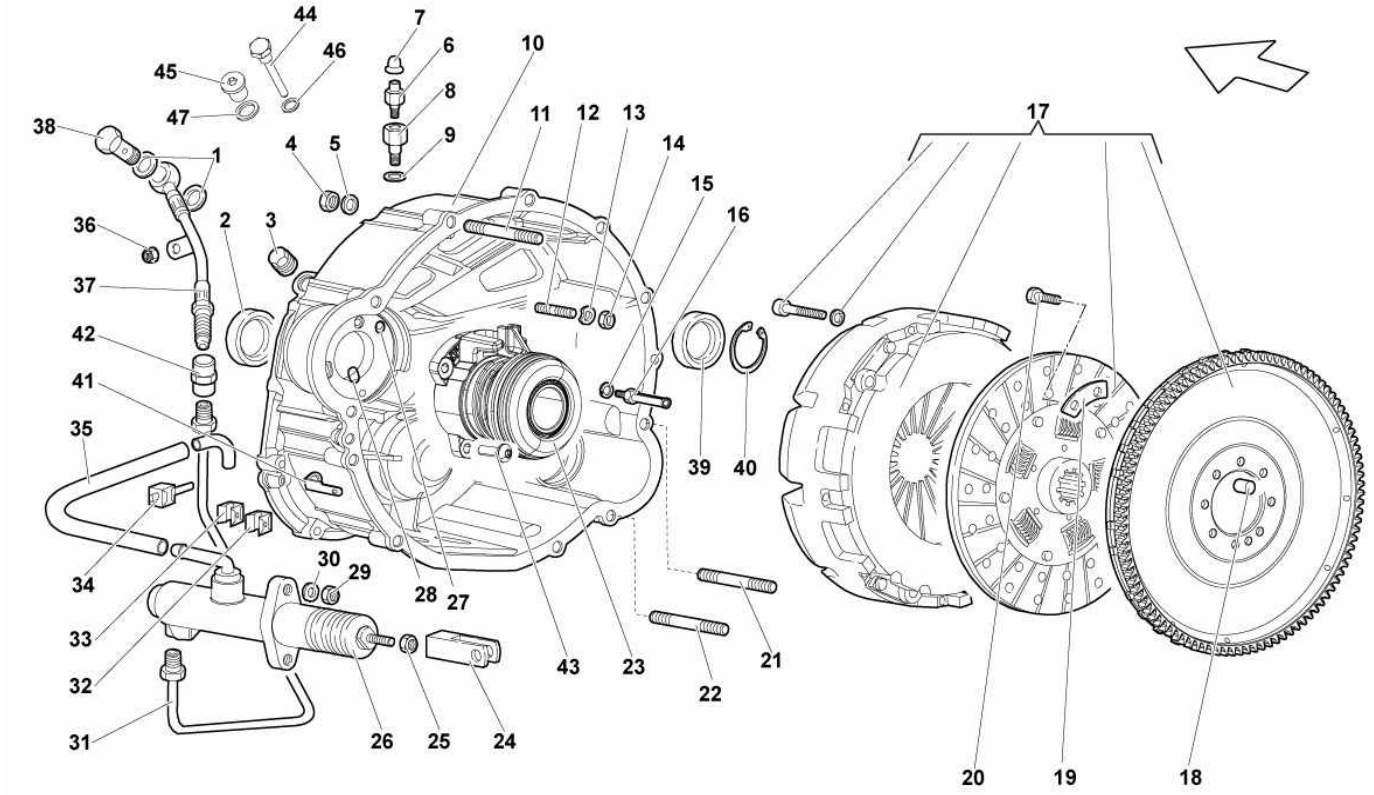

Ref.	Code	Q.ty	Description
1	N 0138131	2	WASHER
2			SEAL RING (VALID UP TO MODEL YEAR 09)
3			HELI-COIL (VALID UP TO MODEL YEAR 09)
4	N 01100845	12	NUT
5	WHT000771	12	WASHER
6	086301138	1	BLEEDER SCREW
7	086301147	1	BOOT
8	086323173B	1	CONNECTOR
9	N 91014802	1	SEAL RING
10	086323209K	1	CLUTCH HOUSING
11	WHT003027	11	STUD BOLT M8X35
12	WHT002942	3	STUD BOLT M6X18
13	WHT003213	3	WASHER
14	N 01100637	2	NUT
15			WASHER (VALID UP TO MODEL YEAR 09)
16			ANTIROTATION BAR HOLD (VALID UP TO MODEL YEAR 09)
17	07M105269	1	BALANCED MECHANISM CLUTCH
18	WHT003078	1	DOWEL
19	410141179	4	PLATE
20	WHT002951	8	SCREW M8X1,25X23
21	WHT002944	2	STUD BOLT M8X50
22	WHT003166	1	STUD BOLT M8X40
23	086141671K	1	THRUST BEARING
24	410721213A	1	FORK
25	N 01100845	1	NUT M8X1,25X6,5
26	410721401A	1	CLUTCH PUMP
27	N 90039604	1	SEAL RING
28	N 90111301	1	SEAL RING

Model : Spare Parts MURCIELAGO SV LP 670-4 Market: USA MY 2010

Group : 141-CLUTCH

Table : 141.01.00-CLUTCH (MANUAL)

Ref.	Code	Q.ty	Description
29	N 01100845	2	NUT M8X1,25X6,5
30	N 0152785	2	WASHER
31	413721461B	1	PIPE
32	400611799	6	CLIP
33	400971848	2	CLIP
34	400611757	1	JOURNAL
35	413721465	1	PIPE
36	WHT003226	1	NUT M12X1X7
37	410721462B	1	HOSE
38	N 0210717	1	SCREW WITH HOLE
39	086311819	1	SEAL RING
40	WHT003580	1	RETAINING RING
41	410911085A	1	BRACKET
42	410721419A	1	CONNECTOR
43	N 10124306	3	SCREW M6X20
44	086323961	1	PLUG
45	N 0160276	1	PLUG
46	N 0138302	1	WASHER
47	N 0138494	1	WASHER

Model : Spare Parts MURCIELAGO SV LP 670-4 Market: USA MY 2010

Group : 121-WATER COOLING SYSTEM

Table : 121.02.00-WATER COOLING SYSTEM

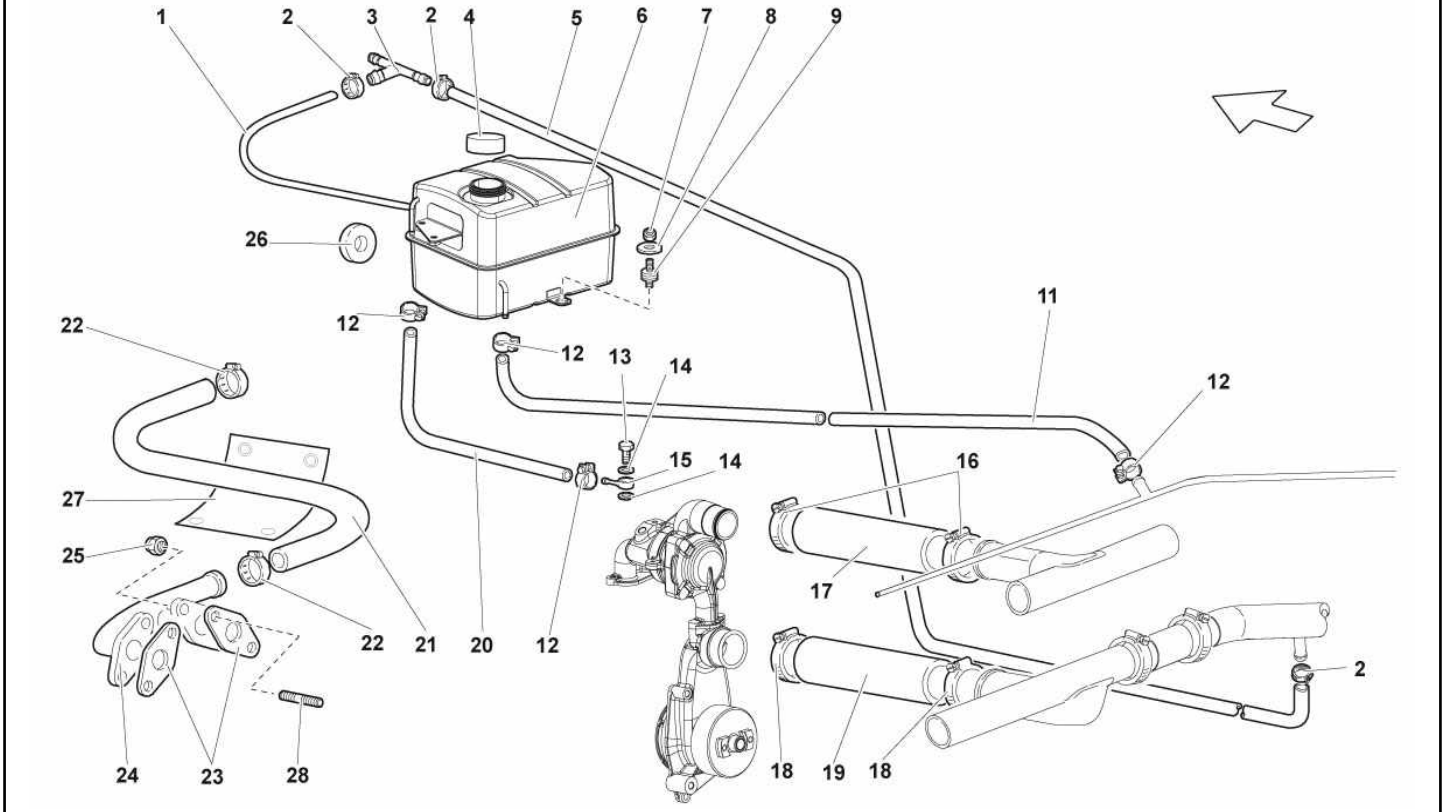

Ref.	Code	Q.ty	Description
1	07M121109	1	PIPE
2	N 90293002	2	CLAMP
3	07M121087	1	CONNECTOR
4	07M121482	1	PLUG
5	07M121127	1	PIPE
6	07M121407B	1	TANK
7	WHT002953	1	NUT M6
8	N 91115501	1	WASHER
9	400972081B	3	PUFFER
11	07M121448	1	PIPE
12	WHT003075	4	CLAMP
13	WHT000524	1	SCREW M8
14	N 0138302	2	WASHER
15	N 91104301	1	CONNECTOR
16	008830215	2	CLAMP
17	07M121163	1	SLEEVE
18	WHT003080	2	CLAMP
19	07M121057	1	PIPE
20	07M121500	1	PIPE
21	410819370	1	PIPE
22	N 90409501	2	CLAMP
23	07M121091	2	GASKET
24	07M121076C	1	CONNECTOR
25	N 01118312	4	NUT
26	400121268	2	RUBBER BUSHING
27	8D0971461	1	PROTECTION
28	WHT002942	4	STUD BOLT M6X18

Model : Spare Parts MURCIELAGO SV LP 670-4 Market: USA MY 2010

Group : 103-ENGINE

Table : 103.06.00-CRANKCASE

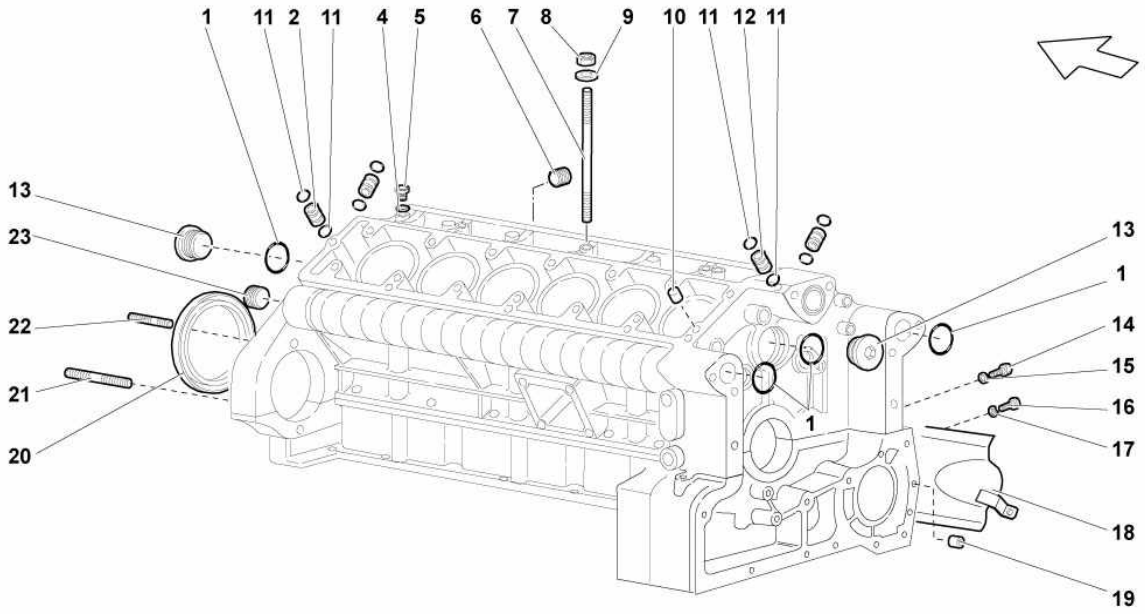

Ref.	Code	Q.ty	Description
1	WHT002159	5	SEAL RING
2	07M103396	2	DOWEL
4	N 0138492	1	WASHER
5	N 0160276	1	PLUG
6	07M103545	1	PLUG
7	WHT001691	3	STUD BOLT
8	N 01118410	3	NUT
9	N 90179103	3	WASHER 18X8,4X2,5
10	WHT003077	2	DOWEL
11	WHT003057	8	SEAL RING
12	07M103139	2	DOWEL
13	07M103485A	2	PLUG
14	N 10650701	1	SCREW
15	WHT003041	1	WASHER
16	N 91143901	1	SCREW
17	WHT000771	1	WASHER
18	07M103750	1	PROTECTION
19	WHT003098	1	DOWEL
20	07M103089	1	SEAL RING
21	WHT003027	3	STUD BOLT
22	WHT003028	2	STUD BOLT M8X25
23	07M103801B	2	PLUG

Model : Spare Parts MURCIELAGO SV LP 670-4 Market: USA MY 2010

Group : 105-CRANKSHAFT - CONNECTING ROD

Table : 105.01.00-CRANKSHAFT - CONNECTING ROD

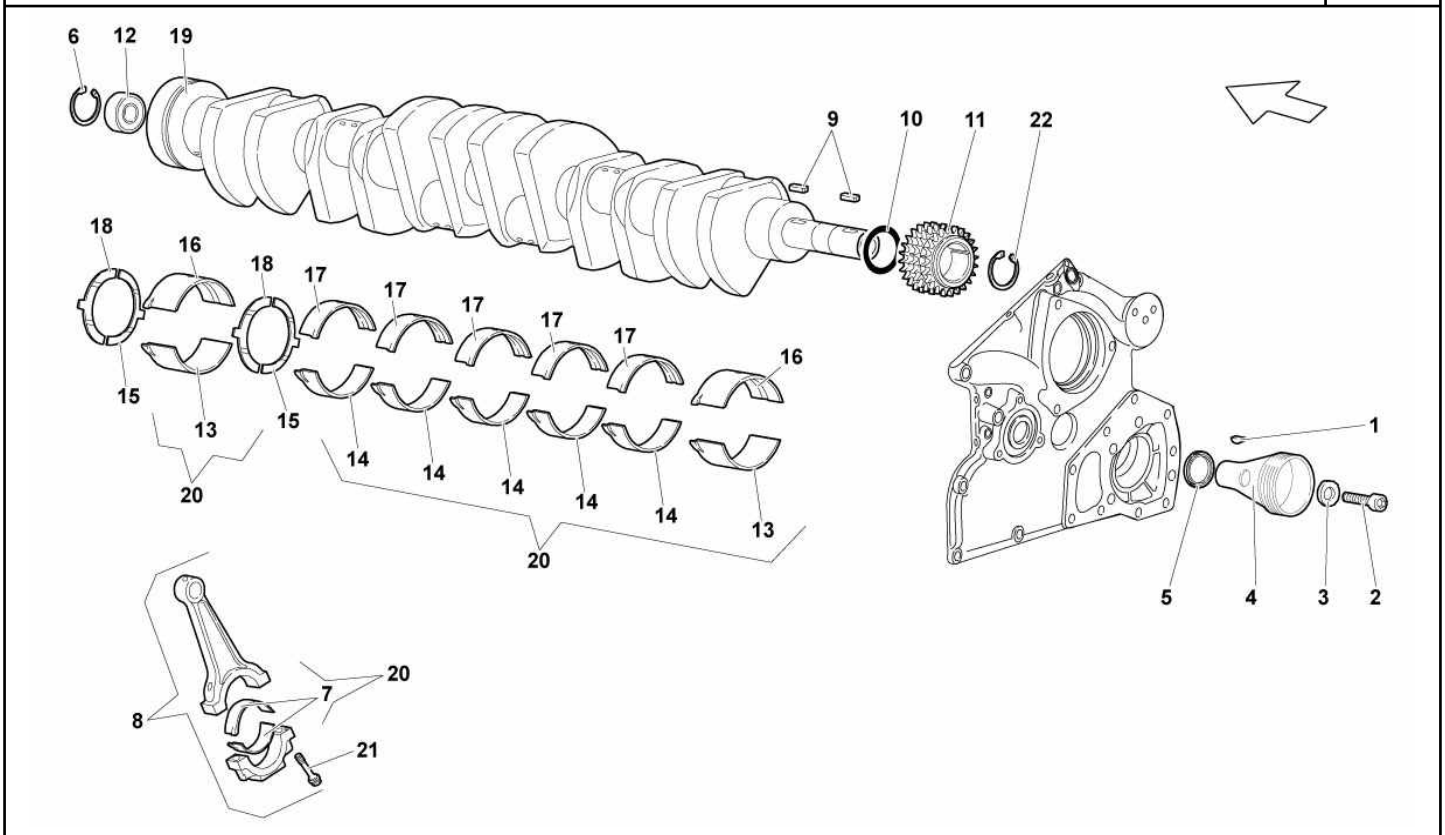

Ref.	Code	Q.ty	Description
1	410109445	1	KEY
2	N 10717901	1	SCREW
3	WHT003056	1	WASHER
4	07M105255D	1	PULLEY
5	WHT003103	1	SEAL RING
6	07M109381	1	RETAINING RING 37X35
7	07M105701	24	BRASS
8	07M105401	12	COMPLETE CONNECTING ROD
9	410109445	2	KEY
10	WHT003062	1	SEAL RING
11	07M105209A	1	GEAR
12	410109264	1	BEARING
13	07M105707A	2	HALF BEARING
14	07M105707C	5	HALF BEARING
15	07M105531A	2	AXIAL HALF BEARING
16	07M105707	2	HALF BEARING
17	07M105707D	5	HALF BEARING
18	07M105531A	2	AXIAL HALF BEARING
19	07M105019D	1	CRANKSHAFT
20	0R1470108	1	SET OF BUSHES
21	WHT003252	24	SCREW M9X1
22	07M109382	1	RETAINING RING 35X33

Model : Spare Parts MURCIELAGO SV LP 670-4 Market: USA MY 2010

Group : 103-ENGINE

Table : 103.05.00-CRANKCASE AND LOWER MOUNTING

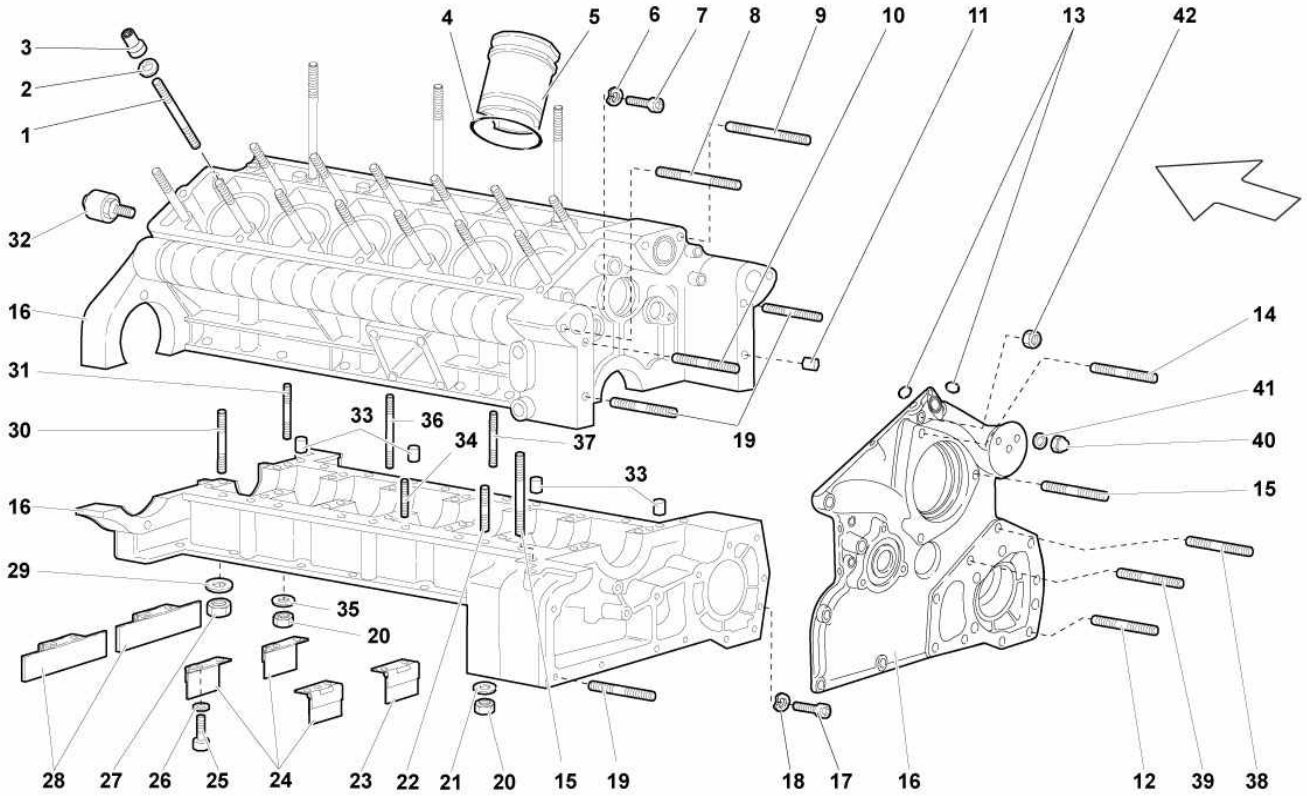

Ref.	Code	Q.ty	Description
1	07M103136A	28	STUD BOLT
2	WHT002599	28	WASHER
3	07M103448B	28	NUT
4	WHT003085	12	SEAL RING
5	07M103321	12	88 DIAMETER CYLINDER LINER
6	N 01152427	2	WASHER
7	N 10647601	2	SCREW
8	WHT002944	2	STUD BOLT M8X50
9	WHT002944	2	STUD BOLT M8X50
10	N 0444416	2	STUD BOLT M8X40
11	WHT003098	2	DOWEL
12	WHT003037	7	STUD BOLT M10
13	WHT003522	2	SEAL RING
14	WHT003030	1	STUD BOLT M8X45
15	WHT003028	2	STUD BOLT M8X25
16	400537001	1	ENGINE BLOCK
17	N 91005902	4	SCREW
18	WHT000771	4	WASHER
19	WHT003032	5	STUD BOLT M8X35
20	N 01100845	14	NUT
21	WHT000771	14	WASHER
22	WHT003166	3	STUD BOLT M8X40
23	07M103729	1	PANEL
24	07M103730	3	PANEL
25	N 90455205	12	SCREW
26	WHT003052	12	WASHER
27	WHT003024	14	NUT
28	07M103749	2	PANEL

Model : Spare Parts MURCIELAGO SV LP 670-4 Market: USA MY 2010

Group : 103-ENGINE

Table : 103.05.00-CRANKCASE AND LOWER MOUNTING

Ref.	Code	Q.ty	Description
29	WHT003046	14	WASHER
30	WHT003038	14	STUD BOLT M12X110
31	WHT003033	13	STUD BOLT M8X1,25X95
32	07L919561B	1	PRESSURE SENSOR
33	WHT003097	4	DOWEL
34	WHT003031	9	STUD BOLT M8X28
35	WHT003043	14	WASHER
36	WHT003034	1	STUD BOLT M8X75
37	WHT003029	8	STUD BOLT M8X18
38	WHT003035	1	STUD BOLT M10X70
39	WHT003036	1	STUD BOLT M10 40-20-26 10.9
40	N 01118410	8	CAP NUT
41	WHT002962	8	WASHER
42	N 01118410	2	NUT

Model : Spare Parts MURCIELAGO SV LP 670-4 Market: USA MY 2010

Group : 863-PASSENGER COMPARTMENT TRIMS

Table : 863.01.00-PASSENGER COMPARTMENT TRIMS

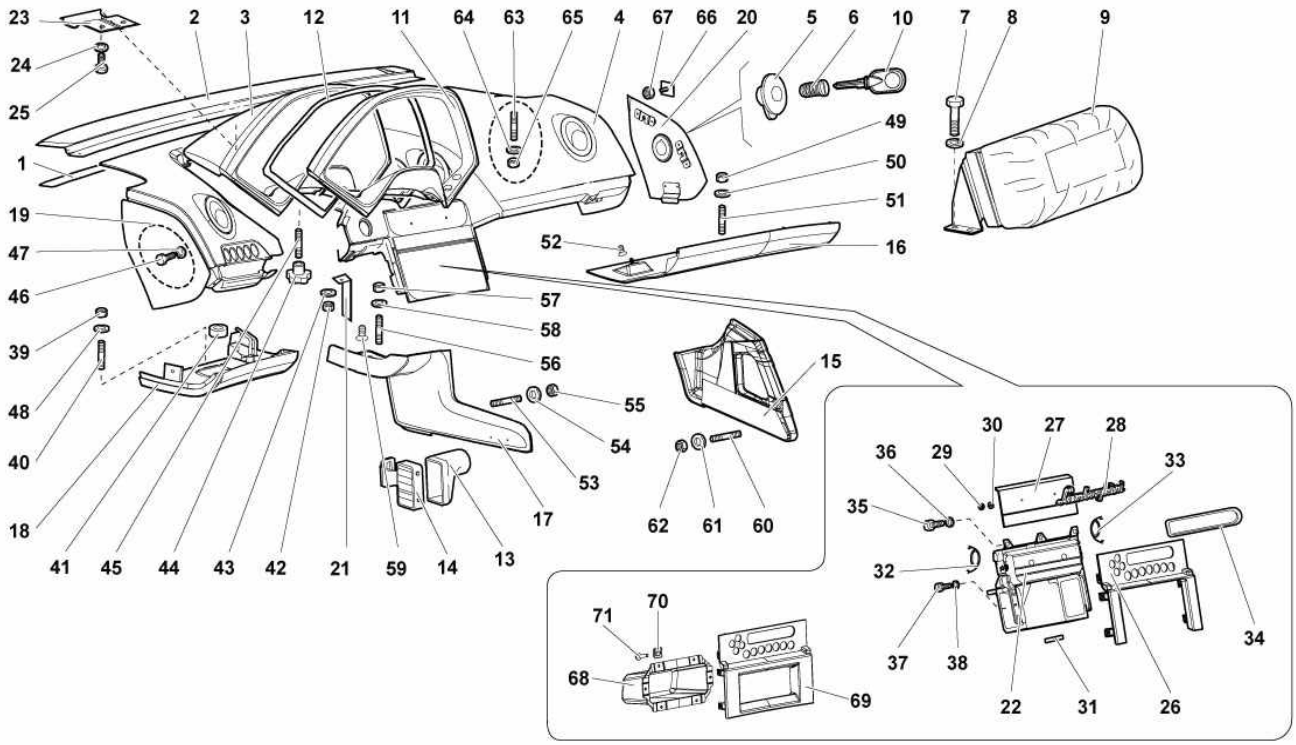

Ref.	Code	Q.ty	Description
1	410819018	3	GASKET
2	410858349A	1	UPPER FRONT DASHBOARD ASSEMBLY
3	410858278A	1	DASHBOARD COVERING (ALCANTARA UPHOLSTERY - SUPPLY VIN)
4	413858451	1	DASHBOARD UPPER PART ASSEMBLY (LEATHER INTERIOR - SUPPLY VIN)
5	410919237	1	AIRBAG SWITCH
6	400919228B	1	AIRBAG BLOCK (INCLUDES 2 AIRBAG KEY)
7	N 90612002	4	SCREW
8	WHT002963	4	WASHER
9	413880199	1	AIR BAG MODULE
10			AIRBAG KEY (VALID UP TO MODEL YEAR 07)
11	410858277A	1	FRAME (CARBON INTERIOR DARK)
11	410858277	1	FRAME (STANDARD)
12	410858177	1	GASKET
13	410864255	1	OUTLET
14	410864877	1	AIR PIPE UNION GRID, DRIVER@S SIDE
15	429857927	1	CAR HI-FI SYSTEM DASHBOARD RIGHT HANDLE ASSEMBLY (ALCANTARA UPHOLSTERY - SUPPLY VIN)
16	413857006B	1	LOWER RIGHT DASHBOARD ASSEMBLY (ALCANTARA UPHOLSTERY - SUPPLY VIN)
17	413854689B	1	CAR HI-FI SYSTEM DASHBOARD LEFT SIDE ASSEMBLY (ALCANTARA UPHOLSTERY - SUPPLY VIN)
18	413857007B	1	LOWER LEFT DASHBOARD ASSEMBLY (ALCANTARA UPHOLSTERY - SUPPLY VIN)
19	413857085C	1	LEFT SIDE COVER ASSEMBLY (CARBON INTERIOR DARK)
20	413857086B	1	RIGHT SIDE COVER ASSEMBLY (CARBON INTERIOR DARK)
21	410857320A	1	BRACKET
22	410861941D	1	A/C PANEL ASSEMBLY

Model : Spare Parts MURCIELAGO SV LP 670-4 Market: USA MY 2010

Group : 863-PASSENGER COMPARTMENT TRIMS

Table : 863.01.00-PASSENGER COMPARTMENT TRIMS

Ref.	Code	Q.ty	Description
23	410858573	1	BRACKET
24	N 01152221	2	WASHER
25	N 0102018	2	SCREW
26	410035422N	1	FRAME (CARBON INTERIOR DARK)
27	410864123A	1	LID (CARBON INTERIOR DARK)
28	400853682A	1	LAMBORGHINI ORNAMENT
30	400853139	2	CLIP
31	443803389C	2	FELT
32	410863431	1	LEFT SPRING
33	410863432	1	RIGHT SPRING
34	410861719	1	FRAME
35	N 10580702	3	SCREW
36	WHT003040	3	WASHER
37	N 90455205	2	SCREW
38	WHT003040	2	WASHER
39	WHT003112	3	NUT
40	WHT003228	2	STUD BOLT M5X14
40	WHT003116	1	STUD BOLT M5X25
41	400804347	1	SPACER
42	N 01508213	2	NUT
43	WHT002961	2	WASHER
44	410858482	2	HANDLE
45	WHT003228	2	STUD BOLT M5X14
46	WHT003069	2	SCREW
47	WHT002961	2	WASHER
48	N 91109202	3	WASHER
49	WHT003112	2	NUT
50	N 91109202	2	WASHER
51	WHT003116	2	STUD BOLT M5X25
52	400867299	2	FASTENER LYS FUSION, YELLOW
53	WHT003094	2	STUD BOLT M4X16
54	N 91109201	2	WASHER
55	WHT002959	2	NUT
56	WHT003116	1	STUD BOLT M5X25
57	WHT003112	1	NUT
58	WHT002961	1	WASHER
59	410863988	1	PLUG
60	WHT003228	2	STUD BOLT M5X14
60	WHT003116	1	STUD BOLT M5X25
61	WHT002961	3	WASHER
62	WHT003112	3	NUT
63	WHT003116	2	STUD BOLT M5X25
64	WHT003093	2	WASHER
65	WHT003112	2	NUT
66	410857879	2	BRACKET
67	WHT003112	2	NUT
68	429857232	1	GLOVE BOX
69	429035422	1	FRAME
70	N 0154523	6	CLIP ST4.2X13.00X11.00

Model : Spare Parts MURCIELAGO SV LP 670-4 Market: USA MY 2010

Group : 863-PASSENGER COMPARTMENT TRIMS

Table : 863.01.00-PASSENGER COMPARTMENT TRIMS

Ref.	Code	Q.ty	Description
71	N 0902661	6	SCREW 4.2X13.0

Model : Spare Parts MURCIELAGO SV LP 670-4 Market: USA MY 2010

Group : 819-DASHBOARD AIR PIPE

Table : 819.01.00-DASHBOARD AIR PIPE

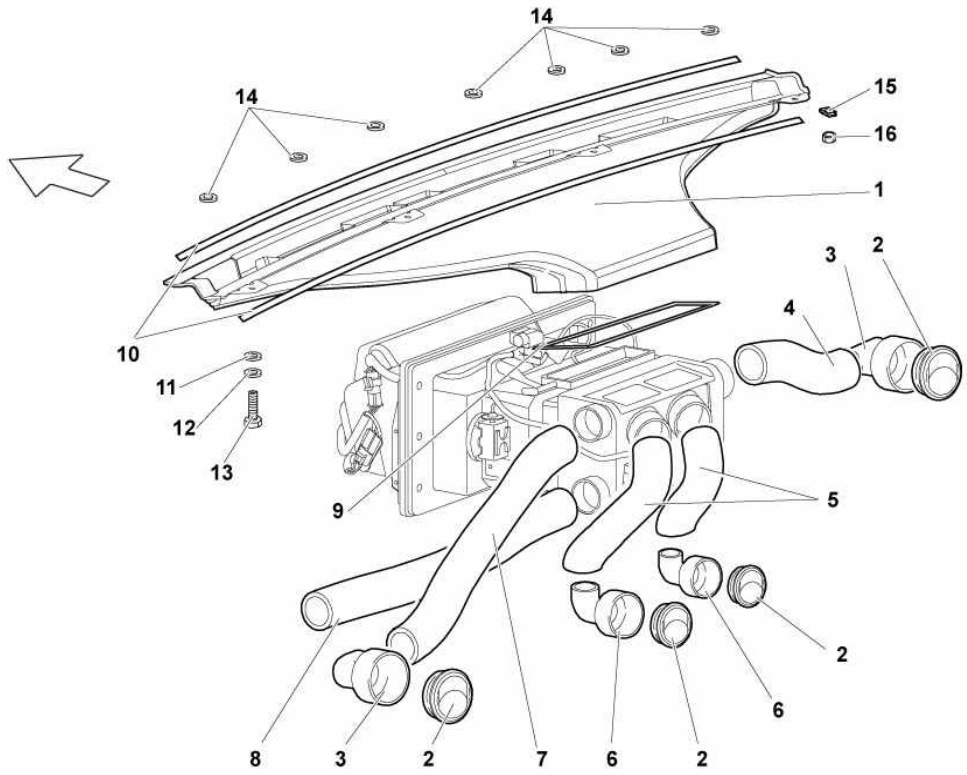

Ref.	Code	Q.ty	Description
1	413819203	1	DEFROSTER AIR CONVEYOR ASSEMBLY
2	400820901B	4	AIR VENT
3	410819077	2	SUPPORT
4	410819320A	1	PIPE (400 MM)
5	410819196A	2	PIPE
6	410819119	2	CONNECTOR
7	410819318A	1	PIPE (600 MM)
8	410819324	1	PIPE
9	410819226	1	GASKET
10	410819018	2	GASKET
11	N 0115484	2	WASHER
12	WHT003093	2	WASHER
13	N 90986803	2	SCREW
14	N 91109201	7	WASHER
15	WHT000916A	2	CLIP

Model : Spare Parts MURCIELAGO SV LP 670-4 Market: USA MY 2010

Group : 919-DASHBOARD INSTRUMENTS

Table : 919.01.00-DASHBOARD INSTRUMENTS

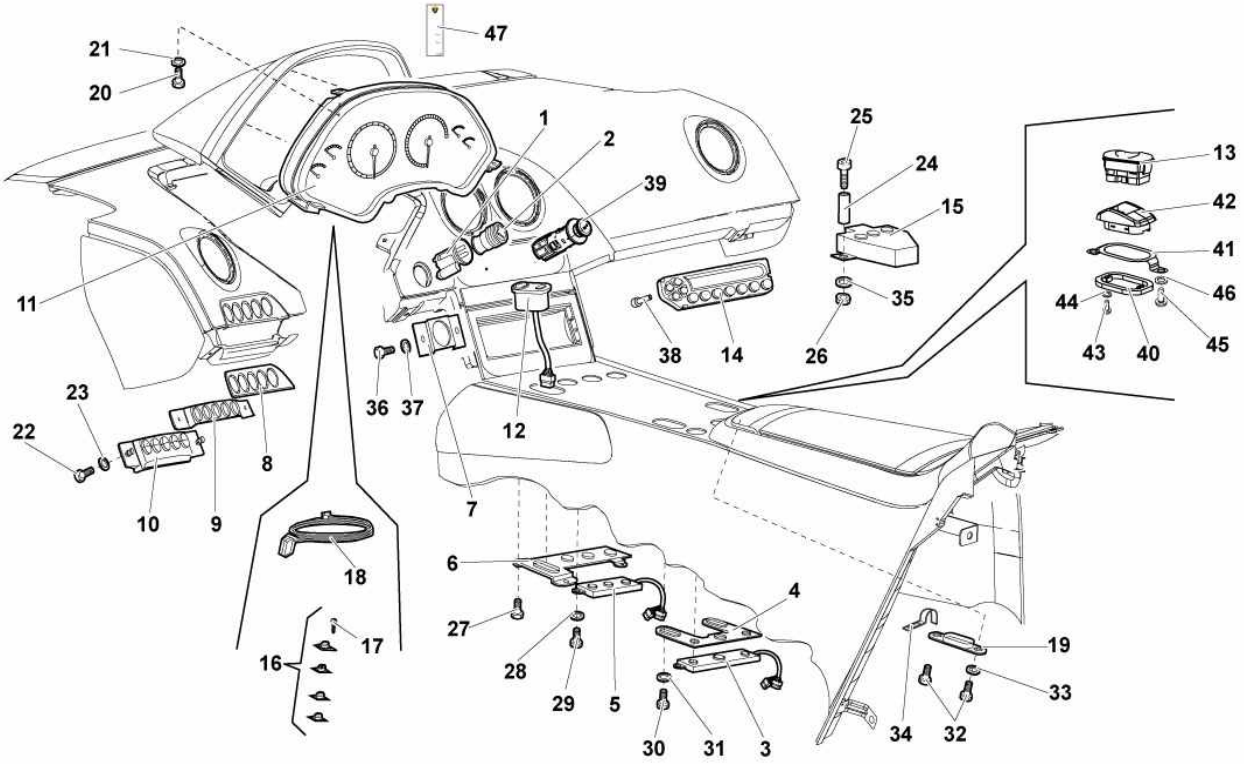

Ref.	Code	Q.ty	Description
1	410857529	1	RING
2	410919307	1	LIGHTER
3	418927127A	1	ANSOR KEYBOARD IN THE GEARBOX REAR SIDE
4	418858092B	1	FRAME (MANUAL GEARBOX)
5	429927143	1	ANSOR KEYBOARD IN THE GEARBOX FRONT SIDE
6	418858091	1	FRAME
7	410858023	1	BRACKET
8	413863365A	1	FRAME (CARBON INTERIOR DARK - SUPPLY VIN)
8	413864147	1	FRAME
9	413864107	1	BRACKET
10	413941567A	1	ANSOR KEYBOARD IN THE DASHBOARD (E-GEAR)
10	413941567	1	ANSOR KEYBOARD IN THE DASHBOARD (MANUAL GEARBOX)
11	429920900B	1	INSTRUMENT PANEL ASSEMBLY (E-GEAR - WARNING USE REF. 47)
11	429920900A	1	INSTRUMENT PANEL ASSEMBLY (MANUAL GEARBOX - WARNING USE REF. 47)
12	410959565A	1	SIDE VIEW MIRRORS SWITCH
13	410919815A	2	RH/LH POWER WINDOW SWITCH
14	410820043B	1	DIAVIA A/C DASHBOARD ASSEMBLY
15	418919823A	1	E-GEAR CONTROL PANEL
16	410919225	1	BUTTON SET
17	WHT003297	8	SCREW 2.2X6.5
18	410971315B	1	WIRING HARNESS
19			FRAME (VALID UP TO MODEL YEAR 08)
20	N 90455205	2	SCREW M4X10
20	WHT003088	2	SCREW M4X16
21	N 01152221	4	WASHER
22	N 01020717	2	SCREW M5X12
23	N 91109201	2	WASHER

Model : Spare Parts MURCIELAGO SV LP 670-4 Market: USA MY 2010

Group : 919-DASHBOARD INSTRUMENTS

Table : 919.01.00-DASHBOARD INSTRUMENTS

Ref.	Code	Q.ty	Description
24	410857441	2	SPACER
25	N 91078401	2	SCREW M6X50
26	WHT002953	2	NUT M6
27	WHT003067	4	SCREW M4X10
28	N 0115359	4	WASHER
29	WHT003084	4	SCREW M3X12
30	WHT003110	4	SCREW M4X10
32			SCREW M4X10 (VALID UP TO MODEL YEAR 08)
33			WASHER (VALID UP TO MODEL YEAR 08)
34	410864191	2	SUPPORT (E-GEAR)
35	WHT002961	2	WASHER
36	N 10580702	2	SCREW M5X8
37	N 10612001	2	WASHER
38	N 10613301	2	SCREW M3X8
39	7M3919311	1	OUTLET 12V (NON SMOKING VERSION)
40	410858781	2	FRAME
41	410858092	2	SUPPORT (E-GEAR)
42	410858099A	2	FRAME (RH/LH POWER WINDOW SWITCH)
43	N 10613301	4	SCREW M3X8
44	N 01152221	4	WASHER
45	WHT003110	4	SCREW M4X10
46	N 01152221	4	WASHER
47	063000337	1	NAMEPLATE FOR A INSTRUMENT PANEL

Model : Spare Parts MURCIELAGO SV LP 670-4 Market: USA MY 2010

Group : 837-DOORS - KEYS KIT

Table : 837.07.00-DOORS

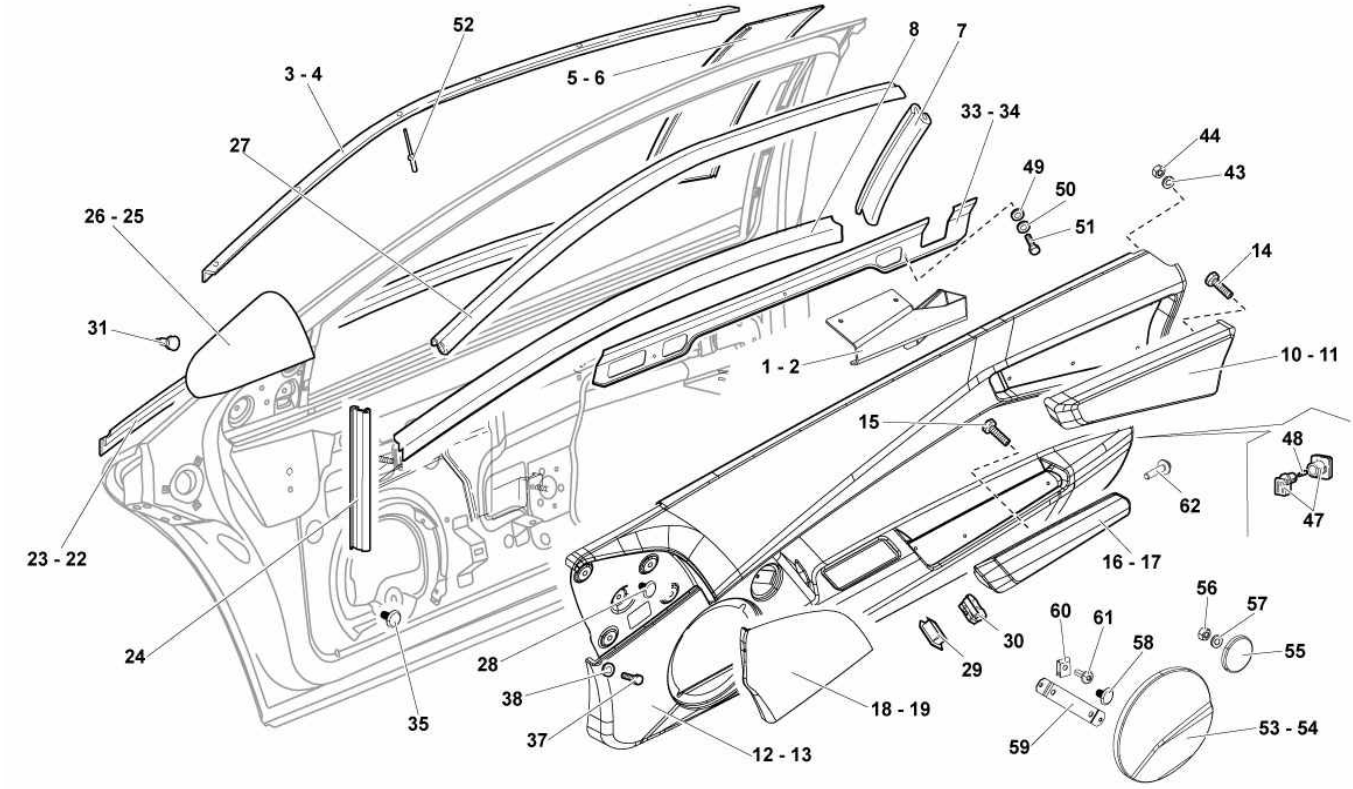

Ref.	Code	Q.ty	Description
1	429867378A	1	RH BRACKET
2	429867377A	1	LH BRACKET
3	418837483	1	LH CHANNEL
4	418837484	1	RH CHANNEL
5	418868335	1	LEFT PROFILE
6	418868336	1	RIGHT PROFILE
7	418837863	2	GASKET
8	410868383	2	DOOR WINDOWS INTERIOR WATER DEFLUXION PROFILE
10	429868110	1	RIGHT DOOR UPHOLSTERY (ALCANTARA UPHOLSTERY - SUPPLY VIN)
11	429868109	1	LEFT DOOR UPHOLSTERY (ALCANTARA UPHOLSTERY - SUPPLY VIN)
12	429867008	1	RH DOOR PANEL ASSEMBLY (SUPPLY VIN)
13	429867007	1	LH DOOR PANEL ASSEMBLY (SUPPLY VIN)
14	N 91068201	12	SCREW M4X10
15	N 91068201	8	SCREW M4X10
16	429867348	1	RIGHT COVERING (ALCANTARA UPHOLSTERY - SUPPLY VIN)
17	429867347	1	LEFT COVERING (ALCANTARA UPHOLSTERY - SUPPLY VIN)
18	429867462	1	RIGHT PANEL FRONT COVER ASSEMBLY (SUPPLY VIN)
19	429867461	1	LEFT PANEL FRONT COVER ASSEMBLY (SUPPLY VIN)
22	410868380	1	RIGHT DOOR WINDOW EXTERIOR WATER DEFLUXION PROFILE
23	410868379	1	LEFT DOOR WINDOW EXTERIOR WATER DEFLUXION PROFILE
24	418837977	2	GASKET
25	429868361	1	LEFT DOOR TRIANGLE (ALCANTARA UPHOLSTERY - SUPPLY VIN)
26	429868362	1	RIGHT DOOR TRIANGLE (ALCANTARA UPHOLSTERY - SUPPLY VIN)
27	418837530	2	GASKET
28	400863119	8	PLUG
29	410868487	2	DOOR SWITCH BRACKET
30	410962107	2	DOOR LOCK/UNLOCK SWITCH
31	4D0867299A	6	FASTENER

Model : Spare Parts MURCIELAGO SV LP 670-4 Market: USA MY 2010

Group : 837-DOORS - KEYS KIT

Table : 837.07.00-DOORS

Ref.	Code	Q.ty	Description
33	410837839A	1	INNER WATER SCRAPER RIGHT WINDOW GLASS
34	410837840A	1	INNER WATER SCRAPER LEFT WINDOW GLASS
35	400863119	8	PLUG
37	N 10718801	2	SCREW M6X16
38	WHT002961	2	WASHER
43	WHT001187	16	WASHER
44	WHT002959	16	NUT M4
47	410947413	2	DOOR LAMP
48			LAMP 12/1,2 H 4C (COMPOSANT NON VENDU SEPAREMENT VOIR REF. 47)
49	N 10612001	8	WASHER
50	WHT003364	8	WASHER
51	WHT001190	8	SCREW M5X12
52	N 0162151	26	RIVET 3.2X9.3
53	429035474	1	LEFT COVER (WITHOUT LOUDSPEAKERS)
54	429035474A	1	RIGHT COVER (WITHOUT LOUDSPEAKERS)
55	429035475	2	COVER (WITHOUT LOUDSPEAKERS)
56	WHT002959	2	NUT M4 (WITHOUT LOUDSPEAKERS)
57	N 01152221	2	WASHER (WITHOUT LOUDSPEAKERS)
58	400863119	4	PLUG (WITHOUT LOUDSPEAKERS)
59	429867508	2	BRACKET (WITHOUT LOUDSPEAKERS)
60	N 90156103	4	CLIP
61	N 90648704	4	SCREW ST4.8X16
62	WHT000757	2	SCREW M6X16

Model : Spare Parts MURCIELAGO SV LP 670-4 Market: USA MY 2010

Group : 837-DOORS - KEYS KIT

Table : 837.03.00-DOORS

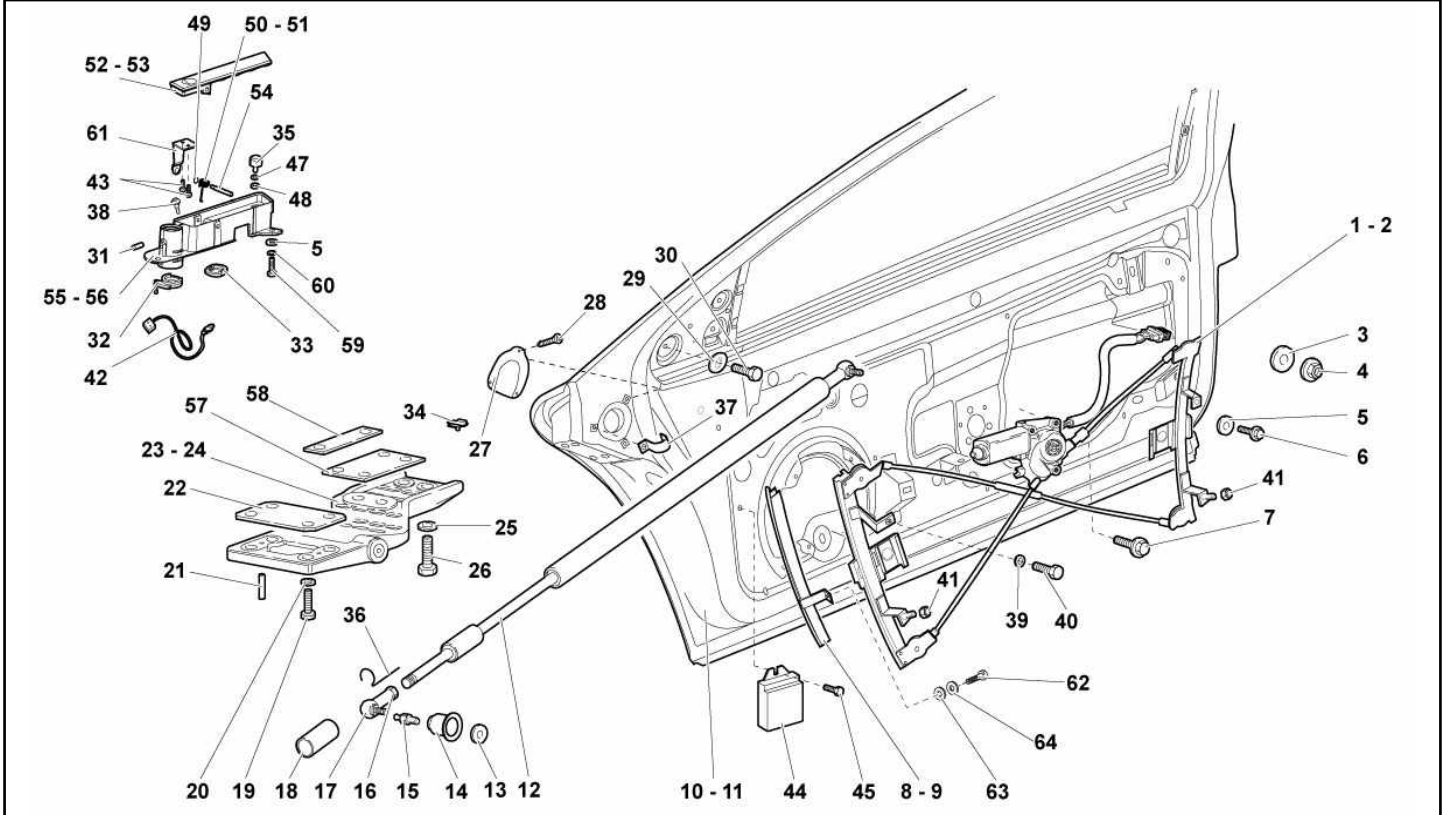

Ref.	Code	Q.ty	Description
1	418837401	1	LH POWER WINDOW ASSEMBLY
2	418837402	1	RIGHT DOOR POWER WINDOW ASSEMBLY
3	WHT002961	3	WASHER
4	N 01508213	3	NUT
5	WHT003040	4	WASHER
6	N 01020717	4	SCREW
7	N 91049601	6	SCREW
8	418837404	1	RH GUIDE
9	418837403	1	LH GUIDE
10	429831051	1	LEFT DOOR FRAME ASSEMBLY
11	429831052	1	RIGHT DOOR FRAME ASSEMBLY
12	429837987	2	DOOR GAS CYLINDER
13	WHT000771	1	WASHER
14	410837749	2	RUBBER CAP
15	410837646A	1	JOURNAL
16	N 01100845	1	NUT M8X1,25X6,5
17	410837262	1	JACK HEAD
18	410837801A	1	SHEATH
19	N 10208905	4	SCREW
20	WHT002955	4	WASHER
21	008900401	2	PIN
22	410837983	1	0.8 MM SHIM
22	410837983A	1	1.0 MM SHIM
22	410837983B	1	1.2 MM SHIM
22	410837983C	1	1.5 MM SHIM
23	410831401	1	LH HINGE
24	410831402	1	RH HINGE
25	N 90179103	4	WASHER 18X8,4X2,5

Model : Spare Parts MURCIELAGO SV LP 670-4 Market: USA MY 2010

Group : 837-DOORS - KEYS KIT

Table : 837.03.00-DOORS

Ref.	Code	Q.ty	Description
26	N 10208906	4	SCREW M10X30.0
27	410867251	1	ORNAMENT
28	N 90455205	3	SCREW
29		3	WASHER (SEE TABLE 837.06.00)
30		3	SCREW (SEE TABLE 837.06.00)
31	WHT003370	2	SCREW
32	410837061	1	BOTTOM RING NUT, LH
33	410837063	1	LH UPPER RING NUT
34	410972672	2	SUPPORT
35	410837549	2	RUBBER CAP
36	410837171	2	RING
37	410868630A	2	BRACKET
38	410837529	2	RUBBER CAP
39	WHT003040	2	WASHER
40	N 10718801	2	SCREW
41	N 01508213	4	NUT
42			WIRING HARNESS (NOT FOR LP640 COUPÉ MODEL)
43	008700472	4	SCREW
44			POWER WINDOW CONTROL UNIT (NOT FOR LP640 COUPÉ MODEL)
45		2	SCREW (NOT FOR LP640 COUPÉ MODEL)
47	N 10612001	2	WASHER
48	WHT003112	2	NUT
49	410863191	2	RETAINING RING
50	410837724	1	RH SPRING
51	410837723	1	LH SPRING
52	410837208AVS	1	RH HANDLE
53	410837207AVS	1	LH HANDLE
54	410837041	2	JOURNAL
55	410837163	1	LEFT HANDLE BODY
56	410837164	1	RIGHT HANDLE BODY
57	410837984	1	2.00 ADJUSTMENT SHIM
58	410837944A	4	1.00 ADJUSTMENT SHIM
59	WHT003111	3	SCREW M5X16
60	N 91109201	10	WASHER
61	410837226A	2	LEVER
62	N 01020717	2	SCREW M5X12
63	N 10612001	2	WASHER
64	WHT003364	2	WASHER

Model : Spare Parts MURCIELAGO SV LP 670-4 Market: USA MY 2010

Group : 837-DOORS - KEYS KIT

Table : 837.02.00-DOORS

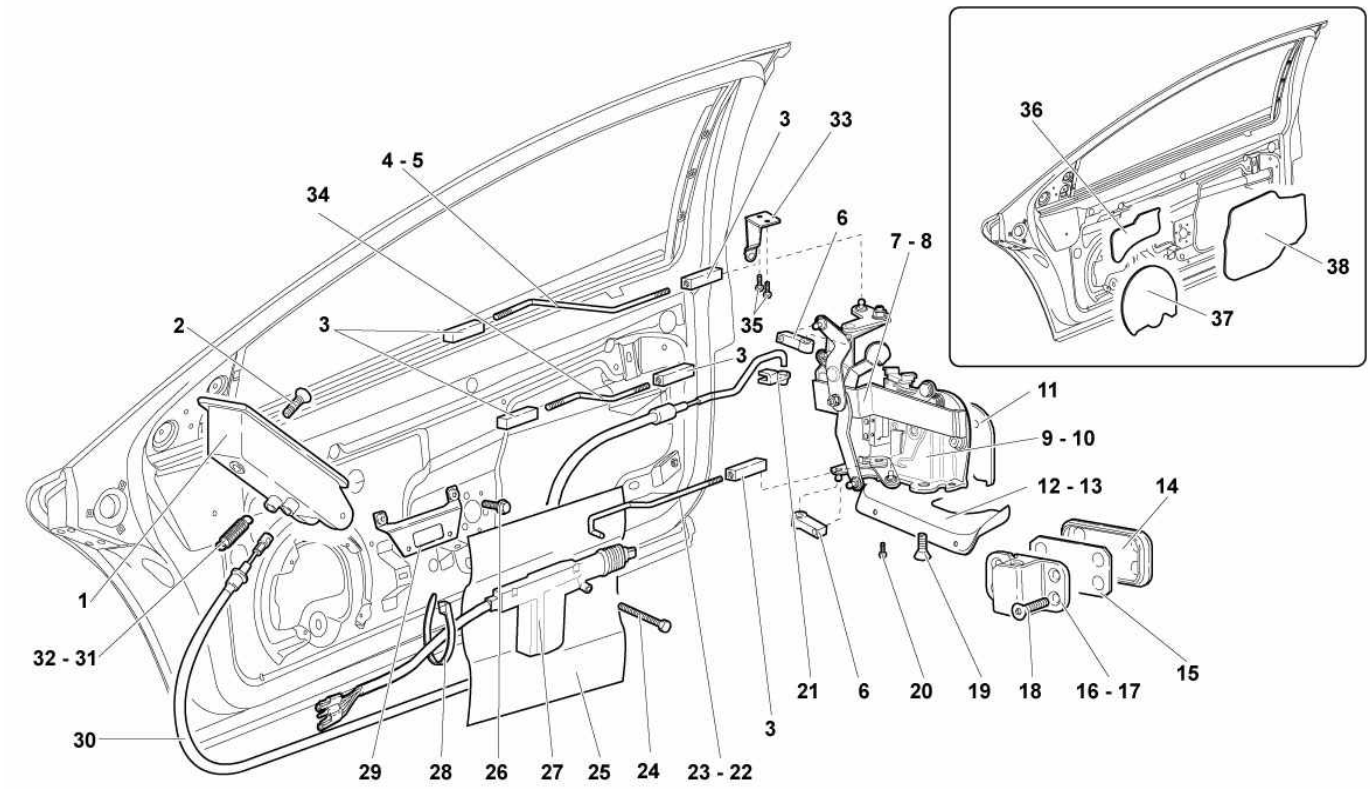

Ref.	Code	Q.ty	Description
1	400827185	2	HANDLE
2	WHT003068	2	SCREW M5X16
3	410837261	5	PAWL
4			RIGHT TIE ROD (FOR RHD VERSIONS)
5	410837237A	1	LEFT TIE ROD
6	410837299	2	PAWL
7	410837161	1	LEFT LOCK LEVER SUPPORTING BRACKET ASSEMBLY
8	410837162A	1	RIGHT LEVER SUPPORTING BRACKET ASSEMBLY
9	418837011C	1	LH LOCK
10	418837012C	1	RH LOCK
11	600940141	1	GASKET KIT (LH - RH)
12	410837902	1	RH ORNAMENT
13	410837901	1	LH ORNAMENT
14	410837899	1	ORNAMENT
15	410837963	2	SPACER
15	410837964	2	SPACER
16	410831407A	1	RIGHT STRIKER
17	410831408A	1	LEFT STRIKER
18	N 10711501	4	SCREW M6X20
19	WHT003068	4	SCREW M6X16
20	WHT003065	4	SCREW 2.9X16
21	410837230	2	PAWL
22	410837654	1	RIGHT TIE ROD
23	410837653	1	LEFT TIE ROD
24	WHT003575	2	SCREW 4.2X19
25	410837909	2	PROTECTION
26	N 90319404	2	SCREW M6
27	410837122	2	ACTUATOR

Model : Spare Parts MURCIELAGO SV LP 670-4 Market: USA MY 2010

Group : 837-DOORS - KEYS KIT

Table : 837.02.00-DOORS

Ref.	Code	Q.ty	Description
28	893971850C	2	CLAMP 4.6X205
29	410837467	1	BRACKET
30	410837018	1	DOOR OPENING CABLE ASSEMBLY
31	410837723	1	LEFT SPRING
32	410837724	1	RIGHT SPRING
33	410837226A	2	LEVER
34	410837511	1	TIE ROD
35	WHT003370	2	SCREW M4X8
36	410867253	2	PROTECTION
37	410867254	2	PROTECTION
38	410867253A	1	LH PROTECTION
38	410867254A	1	RH PROTECTION

Model : Spare Parts MURCIELAGO SV LP 670-4 Market: USA MY 2010

Group : 311-GEARBOX SHIFTING RODS AND SHAFTS

Table : 311.03.00-DRIVEN SHAFT

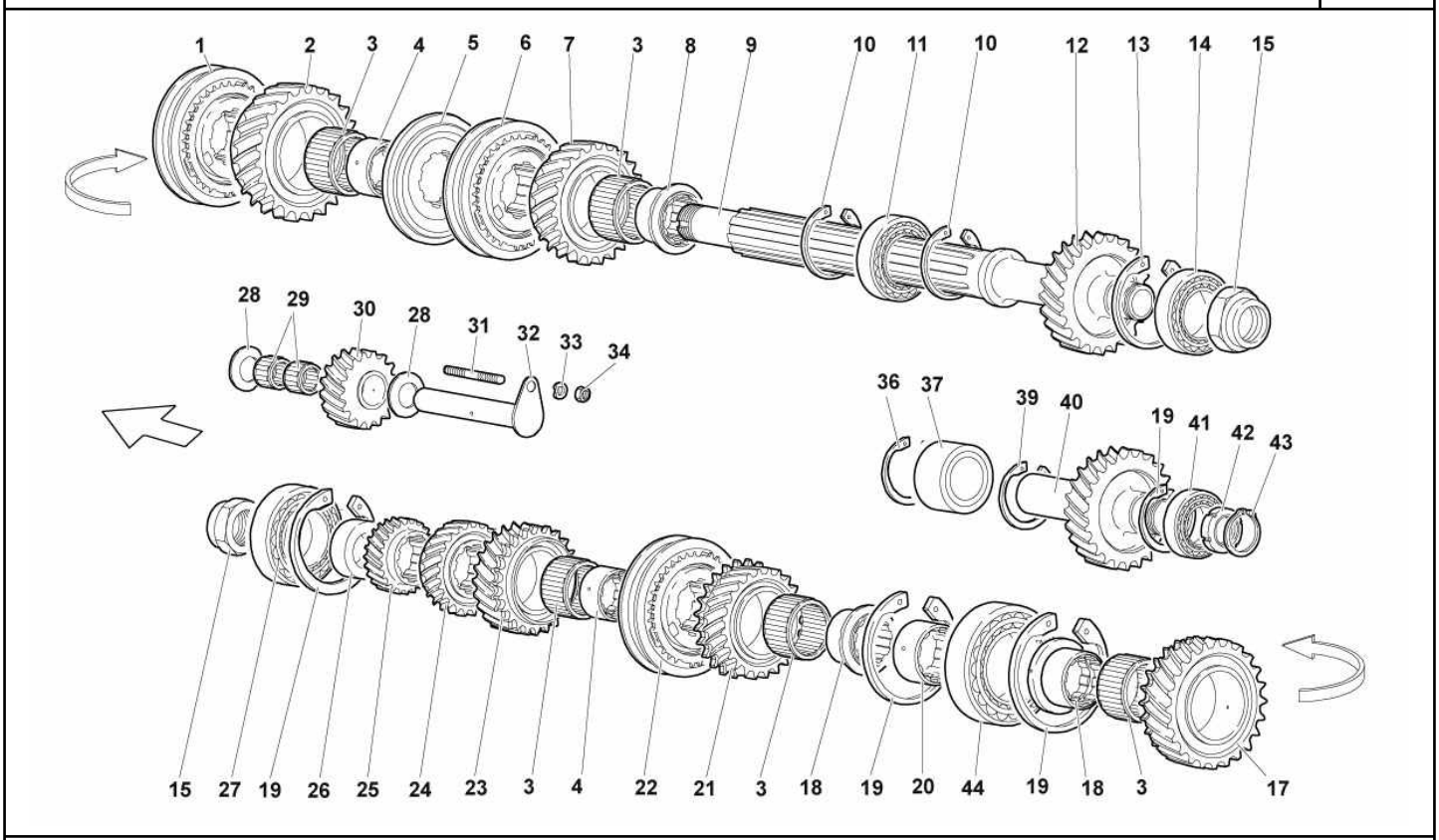

Ref.	Code	Q.ty	Description
1	086311244B	1	SYNCHRONIZER T.C. D.100+CROWN GEAR
2	086311250F	1	FIRST GEAR ASSEMBLY (Order linked to the ref. 9 tav. 311.02.00)
3	086311228A	5	ROLLER CAGE
4	086301374A	2	BUSHING
5	086311279A	1	SHIM ADJUSTMENT
6	086311762C	1	SYNCHRONIZING GEAR D.82 + CROWN GEAR
7	086311532F	1	REVERSE GEAR ASSEMBLY + SYNCHRO
8	086311423B	1	INNER RING
9	086311195F	1	SHAFT
10	WHT003585	2	SEAL RING
11	086301609	1	BEARING Ø85
12	086311348B	1	GEAR
13	WHT003573	1	RETAINING RING
14	086301897	1	BEARING
15	086301618	2	RING NUT
17	086311270E	1	2 GEAR ASSEMBLY
18	086311533A	2	INNER RING
19	WHT003584	4	SEAL RING
20	086311187B	1	INNER RING
21	086311129B	1	THIRD GEAR ASSEMBLY
22	086311309B	1	SYNCHRONIZING GEAR D.71/76 + CROWN GEAR
23	086311145C	1	FOURTH GEAR ASSEMBLY
24	086311153	1	FIFTH GEAR
25	086311165	1	SIXTH GEAR
26	086311876C	1	SPACER
27	086301845	1	BEARING
28	086311388	2	SHIM ADJUSTMENT
29	086311770A	2	ROLLER CAGE

Model : Spare Parts MURCIELAGO SV LP 670-4 Market: USA MY 2010

Group : 311-GEARBOX SHIFTING RODS AND SHAFTS

Table : 311.03.00-DRIVEN SHAFT

Ref.	Code	Q.ty	Description
30	086311531C	1	REVERSE IDLE GEAR
31	WHT003165	1	STUD BOLT
32	086311509	1	REVERS IDLE GEAR SHAFT
33	WHT001197A	1	WASHER
34	WHT002953	1	NUT M6
36	WHT003587	1	SEAL RING
37	086311440	1	BEARING
39	WHT003582	1	RETAINING RING
40	086311834A	1	GEAR
41	086311439	1	BEARING
42	086311667	1	RING NUT
43	WHT003580	1	SEAL RING
44	086301133	1	BEARING Ø80

Model : Spare Parts MURCIELAGO SV LP 670-4 Market: USA MY 2010

Group : 325-E-GEAR SYSTEM - MANUAL

Table : 325.02.00-E-GEAR VALVES GROUP

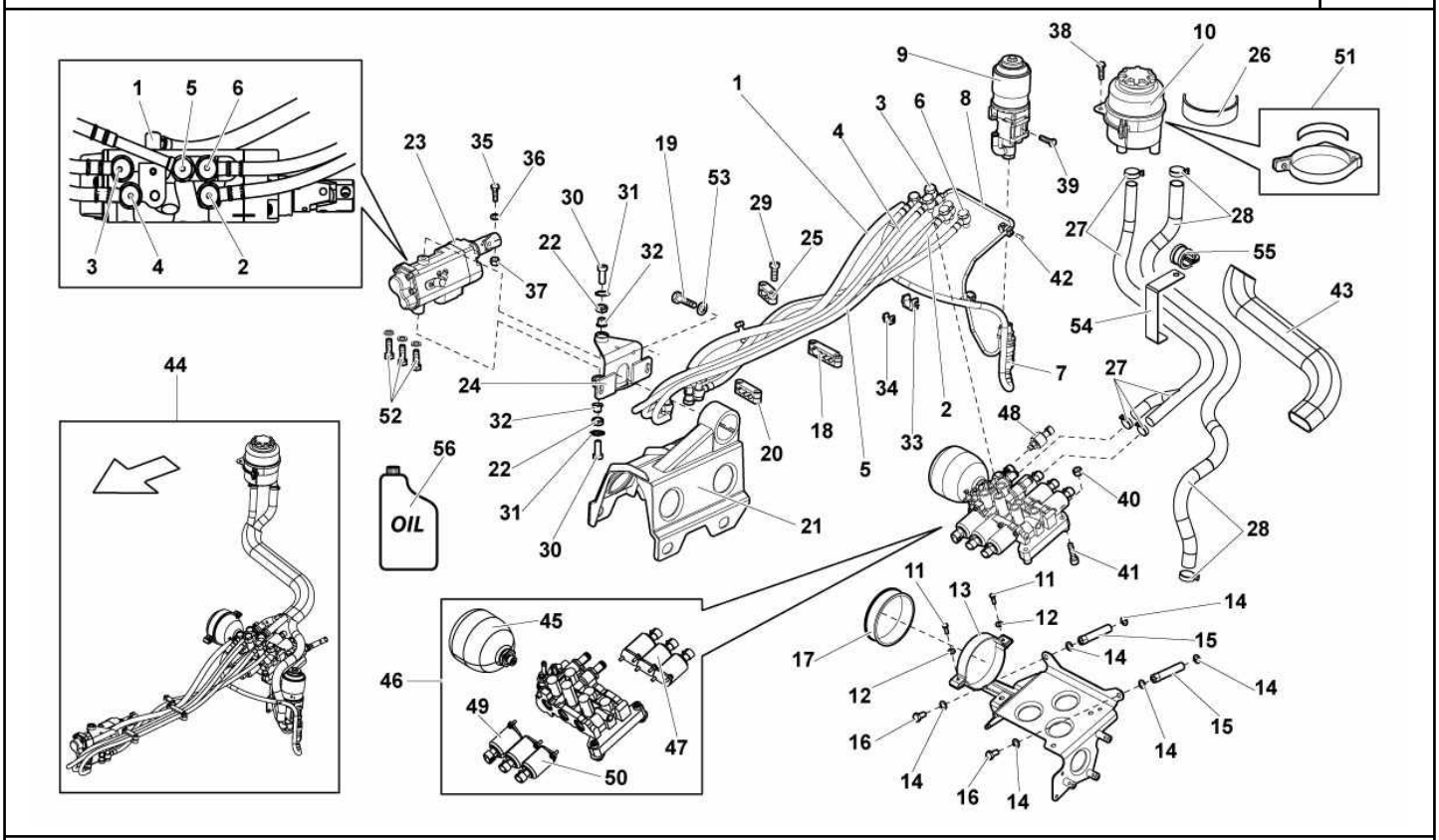

Ref.	Code	Q.ty	Description
1	086325083A	1	PIPE KIT
2	086325095A	1	EV2 PIPE KIT
3	086325097A	1	EV3 PIPE KIT
4	086325107A	1	EV1 PIPE KIT
5	086325163A	1	EV4 PIPE KIT
6	086325165A	1	EV5 PIPE KIT
7	086325171A	1	EVF PIPE KIT
8	086325179A	1	HIGH PRESSURE PIPE
9	086398317	1	SELESPEED ELECTRIC PUMP
10	086325161	1	SELESPEED OIL TANK
11	N 10430103	2	SCREW M5X16
12		2	WASHER (IT IS PART OF REF. 11)
13	086398211	1	BRACKET
14	WHT000771	6	WASHER
15	086325516A	2	SPACER
16	N 01029315	2	SCREW M8X16
17	408326129	1	PUFFER
18	086325300	1	4-SEAT CLAMP
19	N 01029315	2	SCREW M8X16
20	086325300A	1	3-SEAT CLAMP
21	410399113A	1	GEARBOX SUPPORT
22	086325212	2	JOINT
23	086398270	1	ACTUATOR
24	086325191A	1	ACTUATOR SUPPORT
25	086325300B	1	2-SEAT CLAMP
26	086010530	1	NAMEPLATE
27	086325087A	1	3-WAY PIPE KIT
28	086325319A	1	PIPE

Model : Spare Parts MURCIELAGO SV LP 670-4 Market: USA MY 2010

Group : 325-E-GEAR SYSTEM - MANUAL

Table : 325.02.00-E-GEAR VALVES GROUP

Ref.	Code	Q.ty	Description
29	N 91158801	6	SCREW M6X25
30	WHT002948	2	SCREW M8X20
31	WHT003578	2	RING
32	086325220	2	BUSHING
33	400971848	3	SUPPORT
34	400611757	2	SUPPORT
35	N 01024717	1	SCREW M8X35
36	WHT000771	1	WASHER
37	N 90226404	1	NUT M8
38	N 10653201	2	SCREW M6X16
39	N 91126601	3	SCREW M6X16
40	N 90886602	3	NUT M8
41	N 0147774	3	SCREW M8X30
42	400611757	2	JOURNAL
43	086317831A	2	SHEATH
44	086325081H	1	E-GEAR UNIT ASSY
45	086325141A	1	STORAGE BATTERY
46	086325181C	1	VALVES GROUP
47	086325295	3	ACTUATOR + PACKING + LIVES + VALVE QPV02
48	086919331	1	PRESSURE SENSOR
49	086325297	1	ACTUATOR + PACKING + LIVES + VALVE
50	086325293	2	ACTUATOR + PACKING + LIVES + VALVE PPV02
51	086398199	1	BRACKET
52		3	BLEEDER
53	N 90179103	2	WASHER 18X8,4X2,5
54	410323425	1	BRACKET
55	N 0206253	1	CLAMP
56	900000170	1	OIL (1.0Ltr)

Model : Spare Parts MURCIELAGO SV LP 670-4 Market: USA MY 2010

Group : 971-ELECTRICAL SYSTEM

Table : 971.01.00-ELECTRICAL SYSTEM

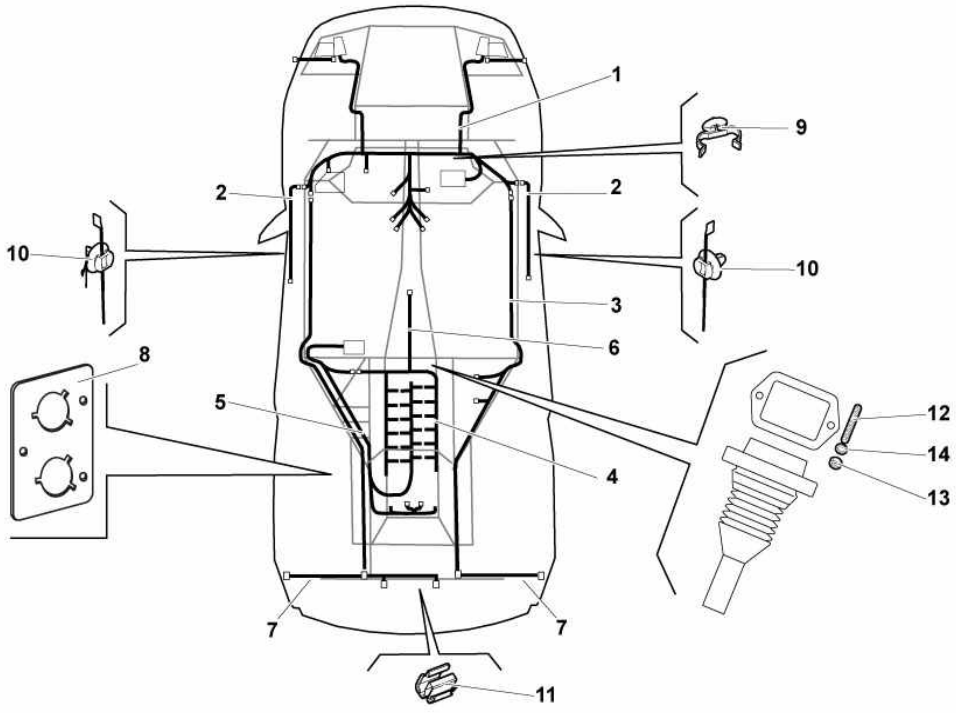

Ref.	Code	Q.ty	Description
1	418971135AA	1	CENTRAL WIRING HARNESS
2	418971035A	2	DOOR WIRING HARNESS
3	410971174K	1	RIGHT REAR WIRING HARNESS (TPMS)
4		1	ENGINE-IGNITION WIRING (SEE TABLE 905.01.00)
5	07M905532S	1	INJECTION WIRING HARNESS (E-GEAR - TPMS)
5	07M905532R	1	INJECTION WIRING HARNESS (MANUAL GEARBOX - TPMS)
6	410971771F	1	E-GEAR WIRING
7	410971181B	2	SIDE MARKER WIRING HARNESS (USA)
8	410971303C	1	SUPPORT
9	701971899G	1	CLAMP
10	3D0971818	4	CLAMP
11	1H0971842B	4	CLAMP
12	N 0443954	2	STUD BOLT M6X30.0 (E-GEAR)
13	N 01118312	2	NUT M6 (E-GEAR)
14	WHT002961	2	WASHER (E-GEAR)

Model : Spare Parts MURCIELAGO SV LP 670-4 Market: USA MY 2010

Group : 959-ELECTRICAL SYSTEM

Table : 959.01.00-ELECTRICAL SYSTEM

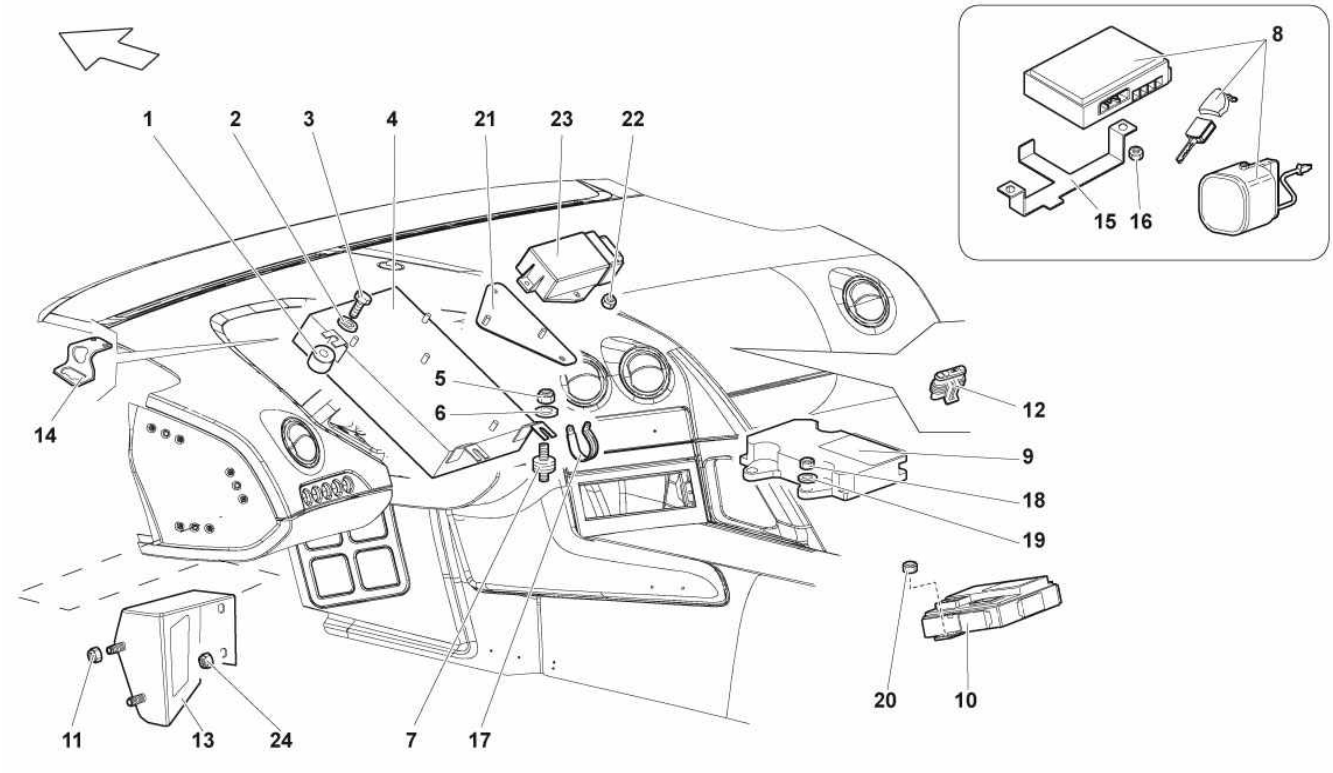

Ref.	Code	Q.ty	Description
1	07L133741	1	SUPPORT
2	WHT002961	1	WASHER
3	N 90319404	1	SCREW M6X12
4	410959433DR	1	GFA CONTROL UNIT (SUPPLY VIN – TO BE PROGRAMMED)
5	N 01118312	2	NUT M6
6	WHT001197A	3	WASHER 6.4X12.0X0.5
7	400972081B	2	FLEXIBLE SUPPORT
8	410937101D	1	ANTI-THEFT CONTROL UNIT AND REMOTE CONTROL (433MHZ)
9	410959655	1	AIRBAG CONTROL UNIT + SENSOR
10	418959875	1	POWER WINDOW CONTROL UNIT
11	N 01508213	2	NUT M6
12	410971946	1	CONNECTOR
13	413857260	1	BRACKET
14	413971457	1	SUPPORT
15	410951287A	1	BRACKET
16	N 01508213	2	NUT M6
17	N 0206253	2	CLAMP
18	N 01100637	3	NUT M6
19	WHT001197A	3	WASHER 6.4X12.0X0.5
20	N 01508213	2	NUT M6
21	410953359	1	SUPPORT
22	WHT003112	2	NUT M5
23	410953227B	1	RELAY
24	WHT003112	2	NUT M5

Model : Spare Parts MURCIELAGO SV LP 670-4 Market: USA MY 2010

Group : 971-ELECTRICAL SYSTEM

Table : 971.02.00-ELECTRICAL SYSTEM

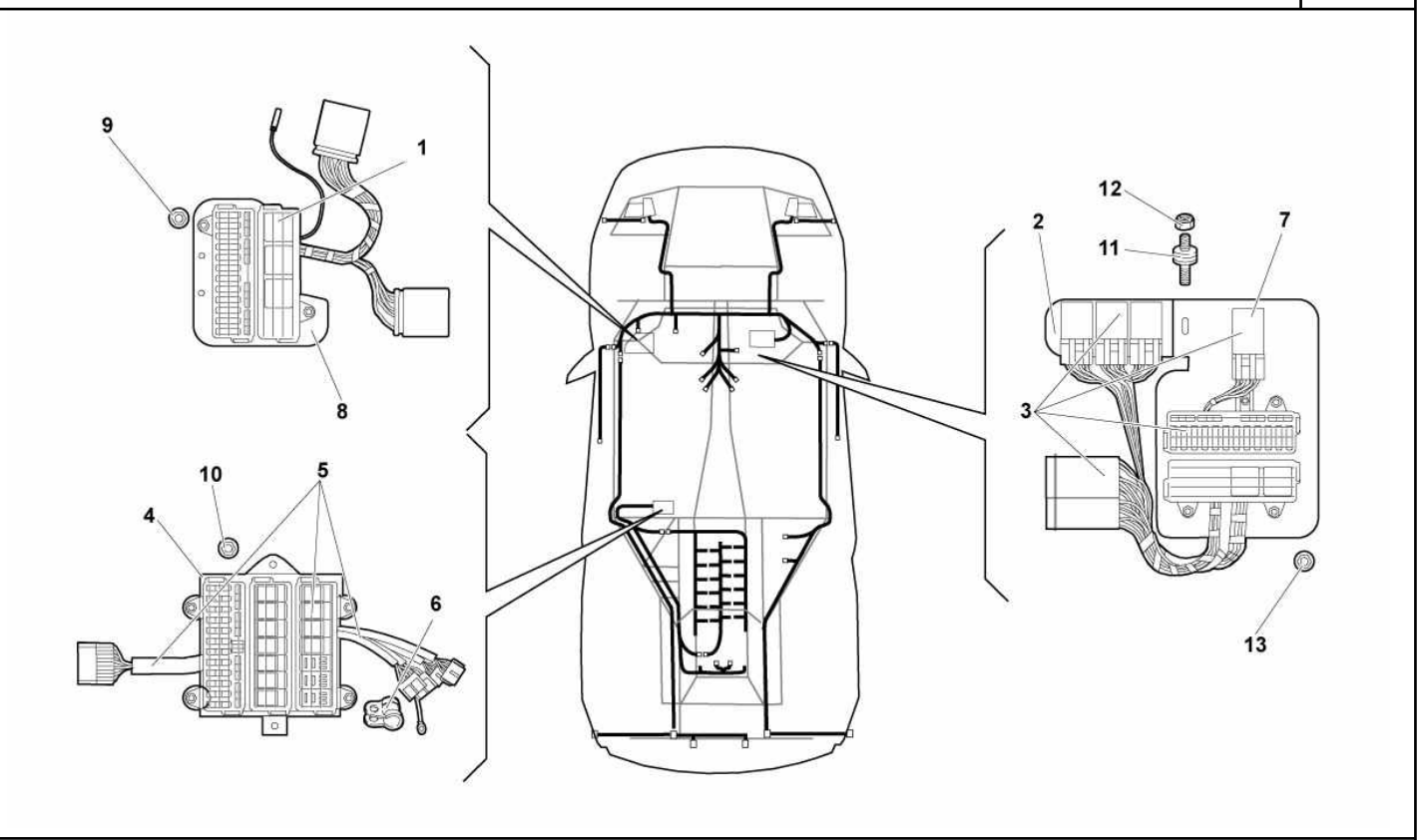

Ref.	Code	Q.ty	Description
1	413971378A	1	RELAY BOX
2	410937155A	1	SUPPORT
3	418971107B	1	RELAY BOX
4	410937539A	1	SUPPORT
5	410971258E	1	RELAY BOX
6	N 0206104	1	CLAMP
7	410962265	1	CONTROL UNIT (DOOR LOCK/UNLOCK)
8	413937149	1	SUPPORT
9	N 01508213	2	NUT M6
10	N 02300212	3	NUT M6
11	400972081C	1	FLEXIBLE SUPPORT
12	N 01508213	1	NUT M6
13	N 01508213	6	NUT M6

Model : Spare Parts MURCIELAGO SV LP 670-4 Market: USA MY 2010

Group : 915-ELECTRICAL SYSTEM

Table : 915.01.00-ELECTRICAL SYSTEM

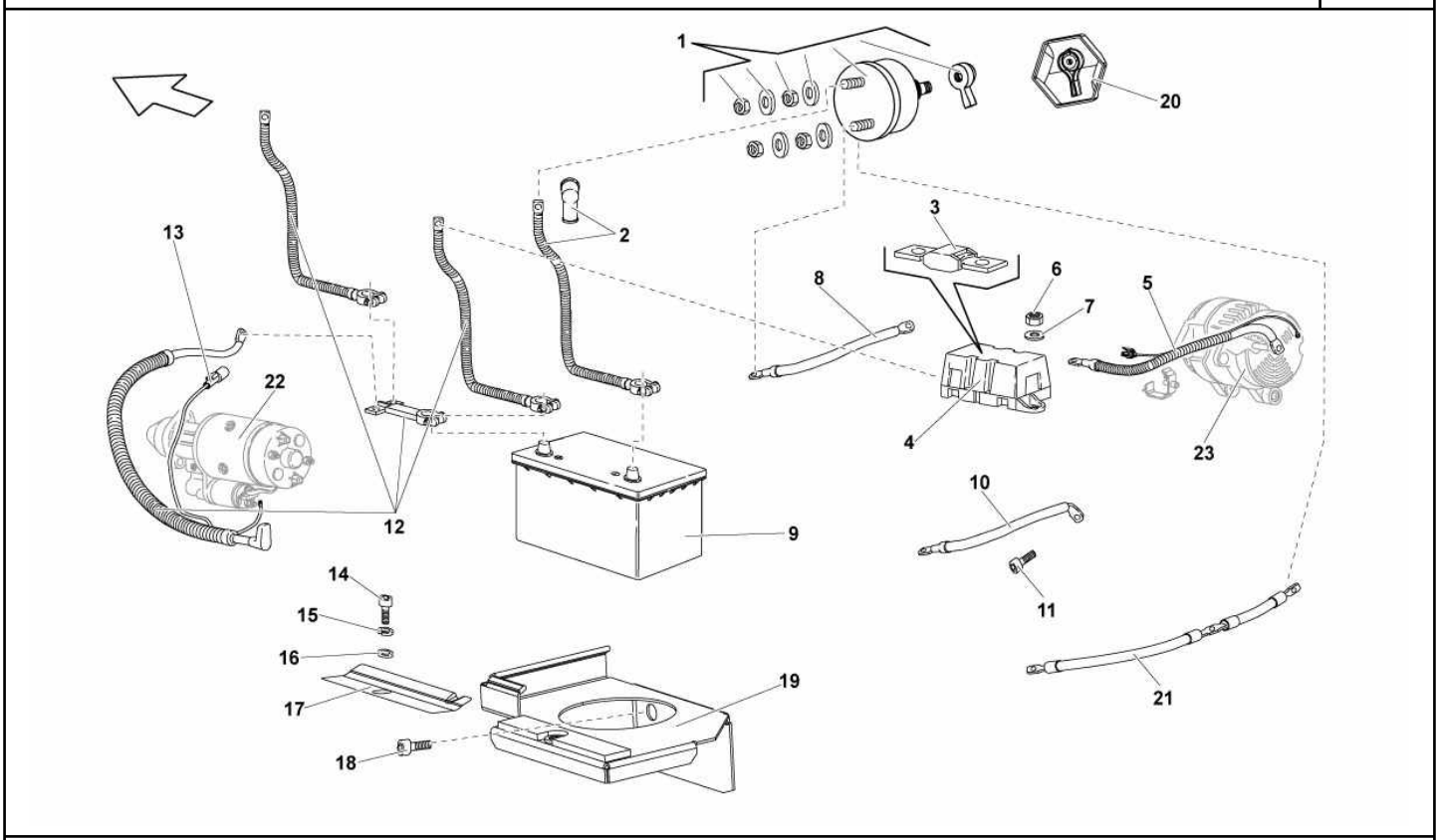

Ref.	Code	Q.ty	Description
1	410915519	1	BATTERY ISOLATOR
2	410971235D	1	CABLE (-) FROM BATTERY TO MAIN BATTERY SWITCH
3	400937629	1	250A FUSE
4	4B3937505	1	MEGA FUSE HOLDER BOX
5	410971134E	1	CABLE FROM ALTERNATOR TO FUSE CONNECTION
6	N 0211963	5	NUT M5
7	WHT001187	1	WASHER 10X5.3X1
8			CABLE (-) FROM MAIN BATTERY SWITCH TO CHASSIS (VALID UP TO MODEL YEAR 08)
9	7L0915105	1	BATTERY
10			CABLE (-) FROM ENGINE TO CHASSIS (VALID UP TO MODEL YEAR 08)
11	N 10049308	1	SCREW M8X20
12	410971097A	1	CABLE
13	410971347A	1	CABLE (+50) STARTER MOTOR EXCITATION
14	N 10285602	1	SCREW M6X25
15	WHT002962	1	WASHER 14X8.4X1.5
16	WHT001397	1	WASHER
17	7L6915138A	1	BRACKET
18	N 10005207	1	SCREW M8X18
19	410915517A	1	BRACKET
20			KNOB (FOR LP640 ROADSTER MODEL)
21	410971237A	1	CABLE (-) BATTERY ISOLATOR - ENGINE - CHASSIS
22			STARTER (SEE TABLE 911.01.00 - SEE REF. 3)
23			ALTERNATOR (SEE TABLE 903.01.00 - SEE REF. 7)

Model : Spare Parts MURCIELAGO SV LP 670-4 Market: USA MY 2010

Group : 971-ELECTRICAL SYSTEM

Table : 971.04.00-ELECTRICAL SYSTEM

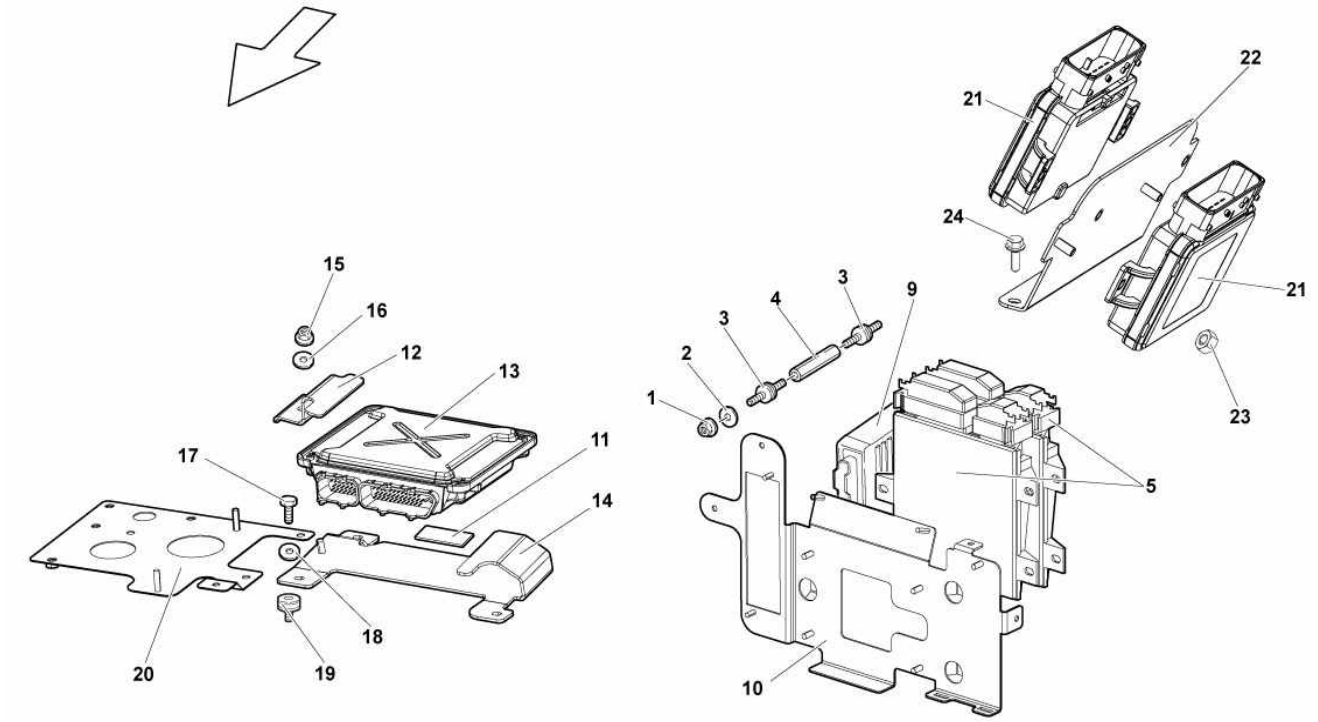

Ref.	Code	Q.ty	Description
1	N 01100845	3	NUT M8X1,25X6,5
2	WHT003052	3	WASHER 4,3
3	400972081B	6	FLEXIBLE SUPPORT
4	410907109	1	STUD
4	410907109A	5	STUD
5	410907557M	2	LIE CONTROL UNIT (SUPPLY VIN – TO BE PROGRAMMED)
9	429959252	1	PMC - CONTROL UNIT
10	410937539A	1	BRACKET
11	400959645	1	INSULATING MATERIAL
12	400907347B	1	BRACKET
13	086927755E	1	E-GEAR CONTROL UNIT
14	400907333A	1	BRACKET
15	N 01508213	1	NUT M6
16			WASHER (VALID UP TO MODEL YEAR 07)
17	N 90319404	7	SCREW M6X12
18	WHT001187	4	WASHER 5.3X10X1
19			FLEXIBLE SUPPORT (FOR GDX VERSIONS)
20	410971336	1	BRACKET
21	410906018	2	ETB CONTROL UNIT
22	410906029A	1	BRACKET
23	N 01118312	4	NUT M6
24	N 10653201	2	SCREW M6X16

Model : Spare Parts MURCIELAGO SV LP 670-4 Market: USA MY 2010

Group : 971-ELECTRICAL SYSTEM

Table : 971.03.00-ELECTRICAL SYSTEM

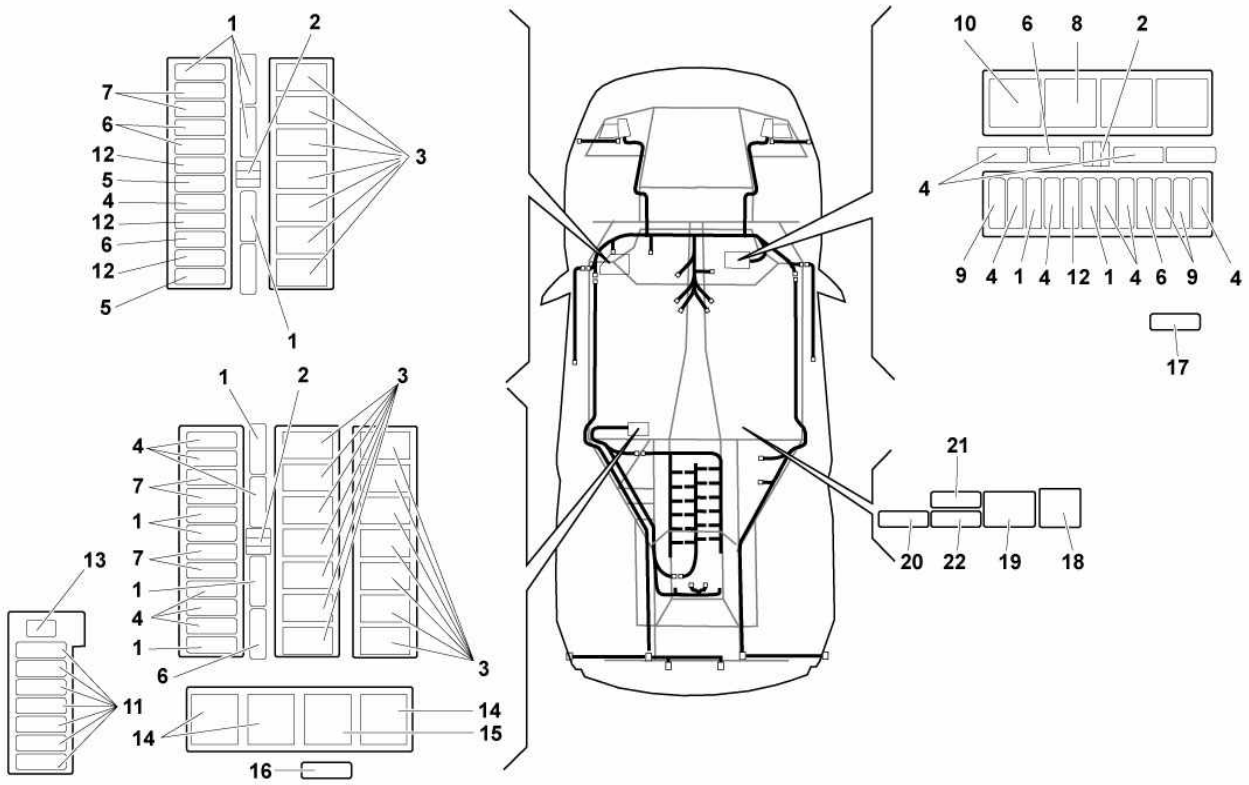

Ref.	Code	Q.ty	Description
1	N 01713112	11	15A FUSE
2	410012231	3	PLIERS FOR FUSE REMOVAL
3	8Z0951253	21	RELAY
4	N 01713111	13	10A FUSE
5	N 01713117	1	3A FUSE
6	N 01713116	6	5A FUSE
7	N 01713113	6	20A FUSE
8	0061010037	1	MINI-RELAY BITRON 23102
9	N 01713115	3	30A FUSE
10	431951253D	1	MINI-RELAY VW/AUDI
11	N 10525502	7	50A FUSE
12	N 01713118	4	7.5A FUSE
13	N 10525601	1	100A FUSE
14	7M0951253A	3	MINI-RELAY BITRON
15	8D0951253A	1	MINI-RELAY BITRON
16	N 01713120	1	40A FUSE
17	N 01713116	1	5A FUSE (TPMS)
18	07L905107	1	RELAY (E-GEAR)
19	8Z0951253	1	MINI-RELAY VW/AUDI
20	N 01713115	1	30A FUSE (E-GEAR)
21	N 01713112	1	15A FUSE (E-GEAR)
22	N 01713118	1	7.5A FUSE (E-GEAR)

Model : Spare Parts MURCIELAGO SV LP 670-4 Market: USA MY 2010

Group : 131-EMISSION CONTROL SYSTEM

Table : 131.01.00-EMISSION CONTROL SYSTEM

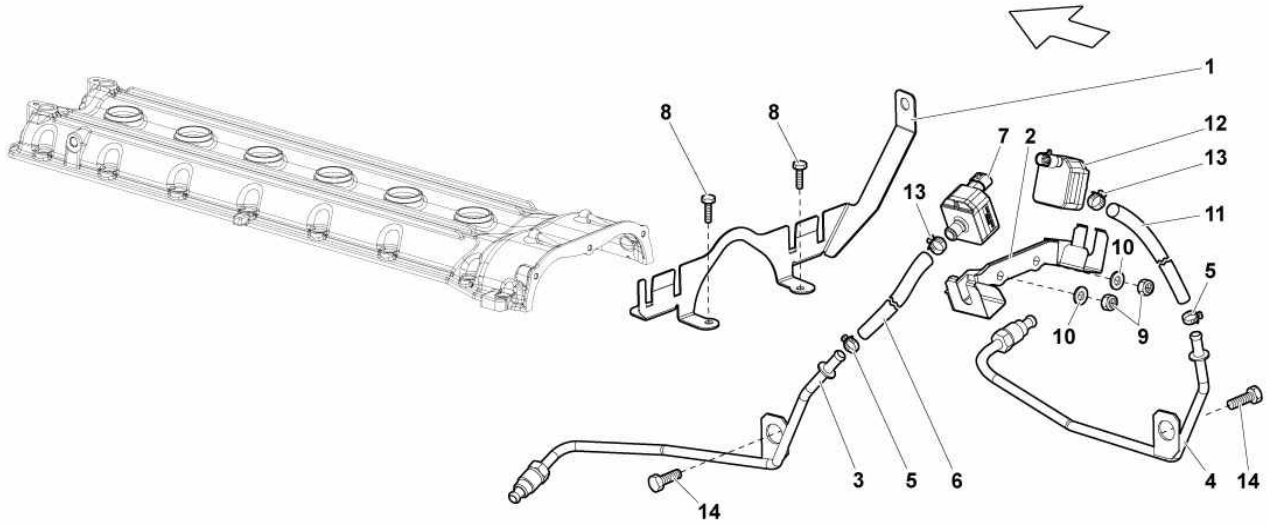

Ref.	Code	Q.ty	Description
1	410905357A	1	BRACKET
2	410906269	1	SUPPORT
3	07M906387C	1	RH PIPE
4	07M906389D	1	LH PIPE
5	N 90686701	2	CLAMP
6	07M131893A	1	PIPE
7	07L906261A	1	SENSOR
8	N 10451404	2	SCREW M6X16
9	N 01118312	2	NUT
10	N 01152427	2	WASHER
11	07M131893A	1	PIPE
12	07L906261A	1	SENSOR
13	400251189B	2	CLAMP
14	N 10524202	2	SCREW M10X12

Model : Spare Parts MURCIELAGO SV LP 670-4 Market: USA MY 2010

Group : 825-FRAME ELEMENTS

Table : 825.04.00-AESTHETIC HEAT

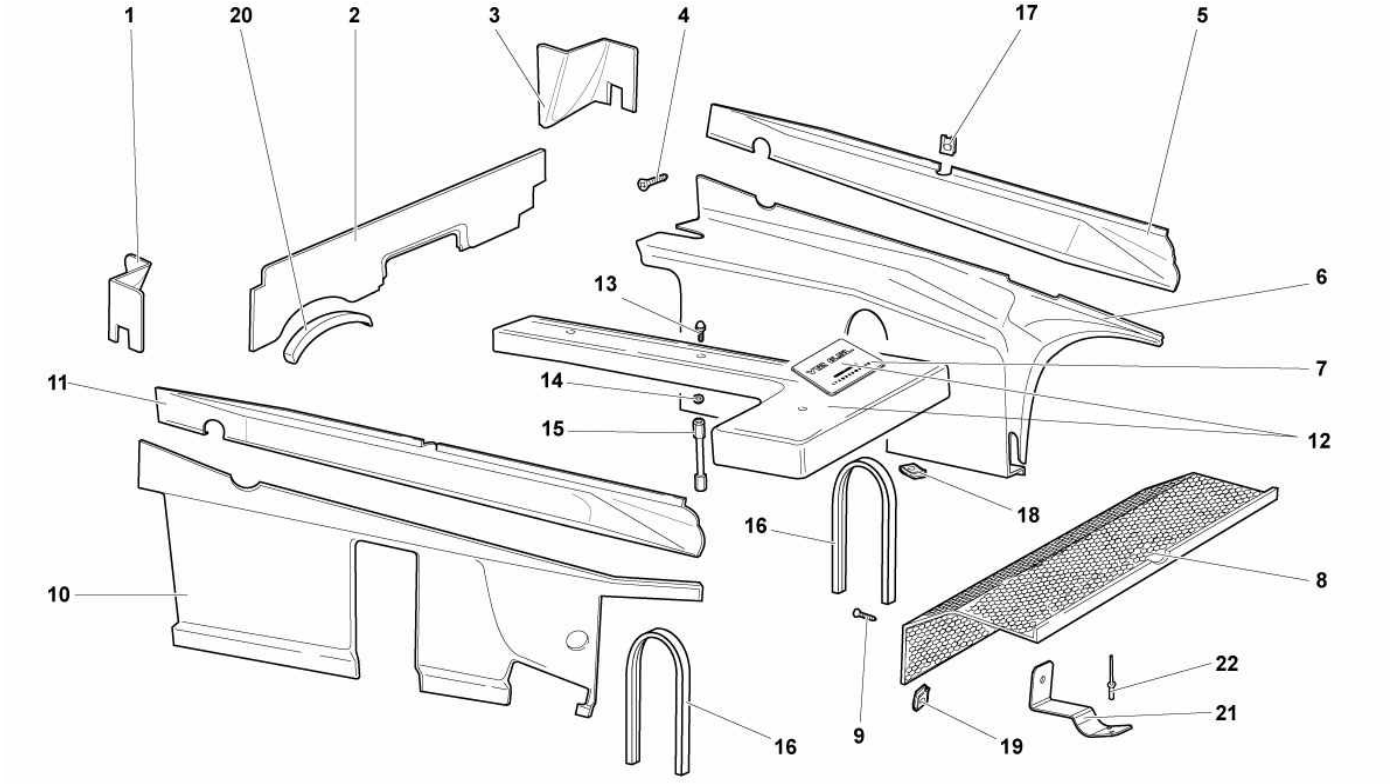

Ref.	Code	Q.ty	Description
1	418103781A	1	LH ANGULAR PAINTED PANEL
2	418103747A	1	FRONT PAINTED PANEL (E-GEAR)
2	418103747B	1	FRONT PAINTED PANEL (MANUAL GEARBOX)
3	418103555A	1	RH ANGULAR PAINTED PANEL
4	N 0902661	18	SCREW 4.2X13.0
5	418103730A	1	UPPER RH PAINTED PANEL
6	429103729	1	LOWER RH PAINTED PANEL
7	07M103115G	1	FUEL PIPING COVER PLATE
8	418864878	1	AUXILIARY COMPONENTS COVERING GRID
9	N 0902661	4	SCREW 4.2X13.0
9	N 10621601	4	SCREW M4X12
10	429103754	1	LOWER LH PAINTED PANEL
11	418103753A	1	UPPER LH PAINTED PANEL
12	07M103926N	1	FUEL PIPING COVER SET
13	N 90842903	4	SCREW M6X12
14			WASHER 7X22X2 (VALID UP TO MODEL YEAR 07)
15	07M103728B	2	STUD
16	429103121	2	GASKET
17	N 0154523	8	CLIP
18			CLIP (VALID UP TO MODEL YEAR 07)
19	WHT003383	4	CLIP
20	410103727	1	GASKET
21	410813988	4	BRACKET
22	410809864	8	RIVET

Model : Spare Parts MURCIELAGO SV LP 670-4 Market: USA MY 2010

Group : 827-REAR HOOD AND SPOILER

Table : 827.08.00-TRANSPARENT ENGINE HOOD

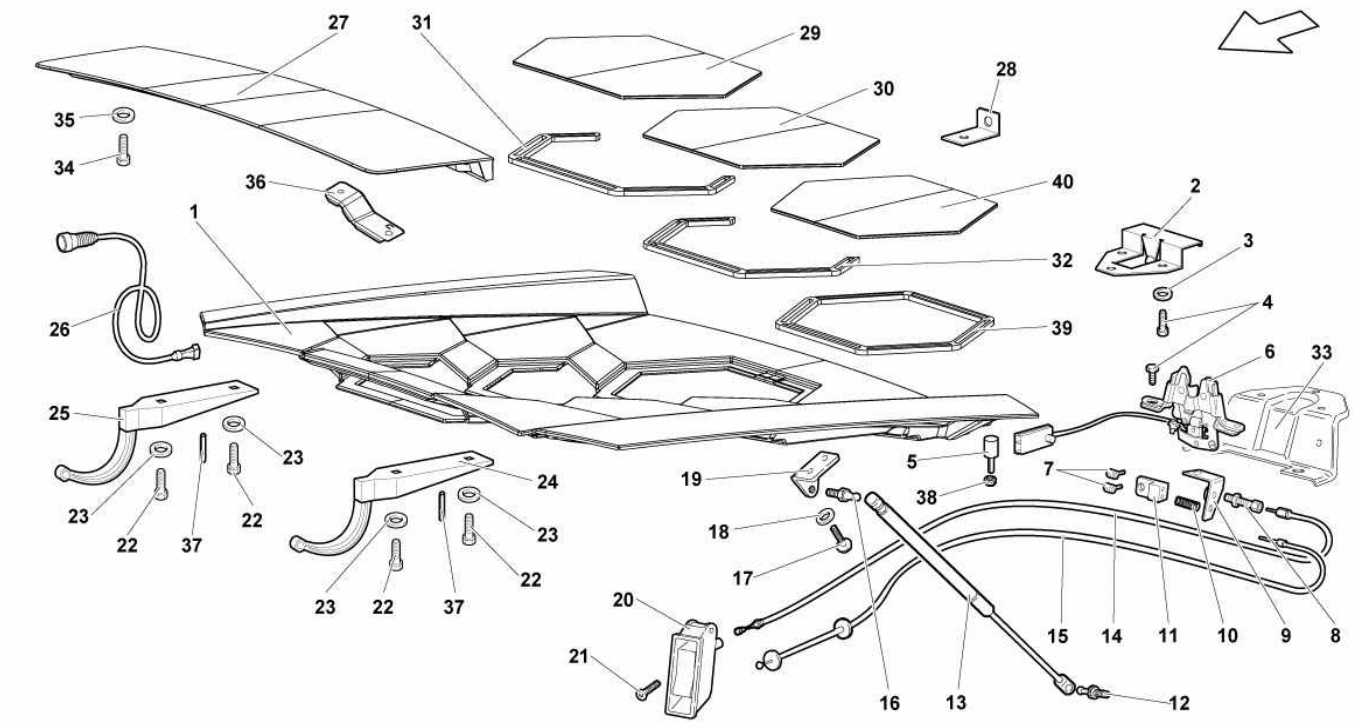

Ref.	Code	Q.ty	Description
1	429827023	1	TRANSPARENT ENGINE HOOD
2	418827322A	1	REFERENCE
3	WHT003407	3	WASHER
4	N 90319404	5	SCREW M6X12
5	417807333	2	SUPPORT
6	410827501B	1	LOCK
7	410827654	2	CLAMP
8	410827421	1	ADJUSTER SCREW
9	418827909	1	BRACKET
10	410827665	1	SPRING
11	410814333	1	DOUBLE CLAMP
12	6X0827439A	2	JOURNAL
13	418827401	2	ENGINE HOOD GAS CYLINDER
14	418827531	1	ENGINE HOOD OPENING CABLE ASSEMBLY
15	418827532	1	ENGINE HOOD EMERGENCY OPENING CABLE ASSEMBLY
16	895827439B	2	JOURNAL
17	N 90319404	4	SCREW M6X12
18	WHT003407	4	WASHER
19	410827601	1	LH BRACKET
19	410827602	1	RH BRACKET
20	400827185	1	HANDLE
21	WHT003091	1	SCREW M5X16
22	N 90319404	4	SCREW M6X12
23	WHT003407	4	WASHER 6.3X16X2
24	418827152	1	ENGINE HOOD LEFT HINGE ASSEMBLY
25	418827151	1	ENGINE HOOD RIGHT HINGE ASSEMBLY
26	429971170	1	WIRING HARNESS
27	429827991	1	PAVIVION

Model : Spare Parts MURCIELAGO SV LP 670-4 Market: USA MY 2010

Group : 827-REAR HOOD AND SPOILER

Table : 827.08.00-TRANSPARENT ENGINE HOOD

Ref.	Code	Q.ty	Description
28	410827454	1	BRACKET
29	429827631	1	ENGINE HOOD GLASS
30	429827632	1	ENGINE HOOD GLASS
31	429827705	1	GASKET
32	429827705A	1	GASKET
33			LOCK FASTENER CASE (SEE TABLE 827.09.00)
34	N 90319404	4	SCREW M6X12
35	WHT003407	4	WASHER
36	418827603	1	LH BRACKET
36	418827604	1	RH BRACKET
37	N 10073601	4	PIN
38	N 01111611	2	NUT M6
39	429827705B	1	GASKET
40	429827446	1	ENGINE HOOD GLASS

Model : Spare Parts MURCIELAGO SV LP 670-4 Market: USA MY 2010

Group : 115-OIL SYSTEM

Table : 115.01.00-ENGINE OIL PUMP

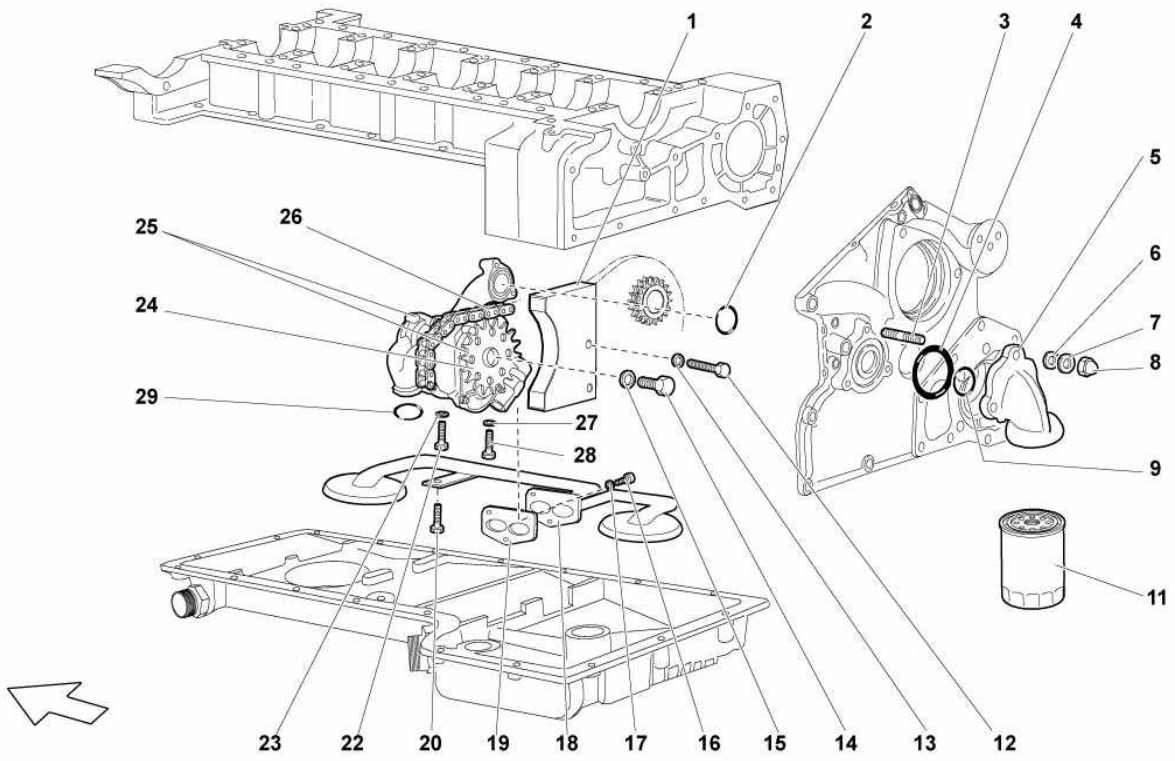

Ref.	Code	Q.ty	Description
1	07M109507	1	CHAIN TIGHTENER OIL PUMP ASSEMBLY
2	WHT003062	1	SEAL RING
3	008300809	3	STUD BOLT M8X25
4	WHT003064	1	SEAL RING
5	07M115407	1	SUPPORT
6	WHT003045	3	WASHER
7	WHT000771	3	WASHER
8	N 01118410	3	NUT M8
9	WHT003063	1	SEAL RING
11	07M115561	1	OIL FILTER ELEMENT
12	N 10510301	2	SCREW M6X35
13	N 90840802	2	WASHER
14	N 01024230	1	SCREW M8X25
15	N 90840802	1	WASHER
16	N 91084801	3	SCREW M6X18
17	WHT001197A	3	WASHER
18	07M115665A	1	PIPE
19	07M115359	1	GASKET
20	N 10049308	1	SCREW M8X20
22	WHT001416	1	SCREW M6X70
23	WHT001197A	1	WASHER
24	07M109570	1	GEAR WHEEL
25	07M115103A	1	COMPLETE OIL PUMP
26	07M109120	1	CHAIN
27	WHT003053	2	WASHER
28	WHT003070	2	SCREW M6X90
29	WHT003062	2	SEAL RING

Model : Spare Parts MURCIELAGO SV LP 670-4 Market: USA MY 2010

Group : 251-EXHAUST SYSTEM

Table : 251.05.00-EXHAUST SYSTEM

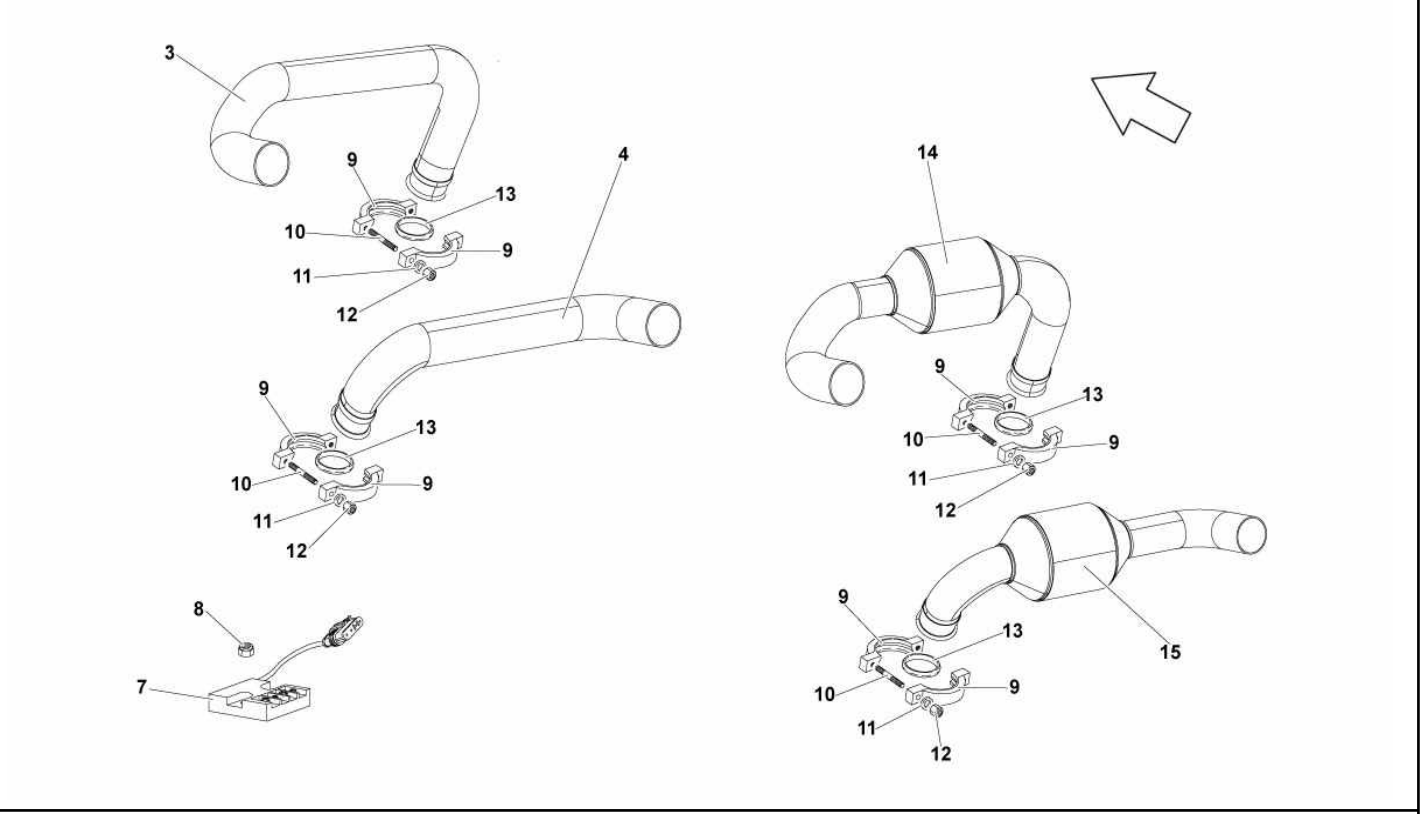

Ref.	Code	Q.ty	Description
3		1	PIPE (NOT FOR USA/CAN MODEL)
4		1	PIPE (NOT FOR USA/CAN MODEL)
7	400919537B	1	CATALYST COLD JOINT
8	WHT002959	2	NUT M4
9	417251143	2	COLLAR
10	N 0444416	4	STUD BOLT M8X40
11	WHT001185	4	WASHER
12	N 02214621	4	NUT M8
13	400131797	2	DUAL CONE
14	07M251718H	1	RIGHT CATALYST ASSEMBLY
15	07M251717H	1	LEFT CATALYST ASSEMBLY

Model : Spare Parts MURCIELAGO SV LP 670-4 Market: USA MY 2010

Group : 251-EXHAUST SYSTEM

Table : 251.04.00-EXHAUST SYSTEM

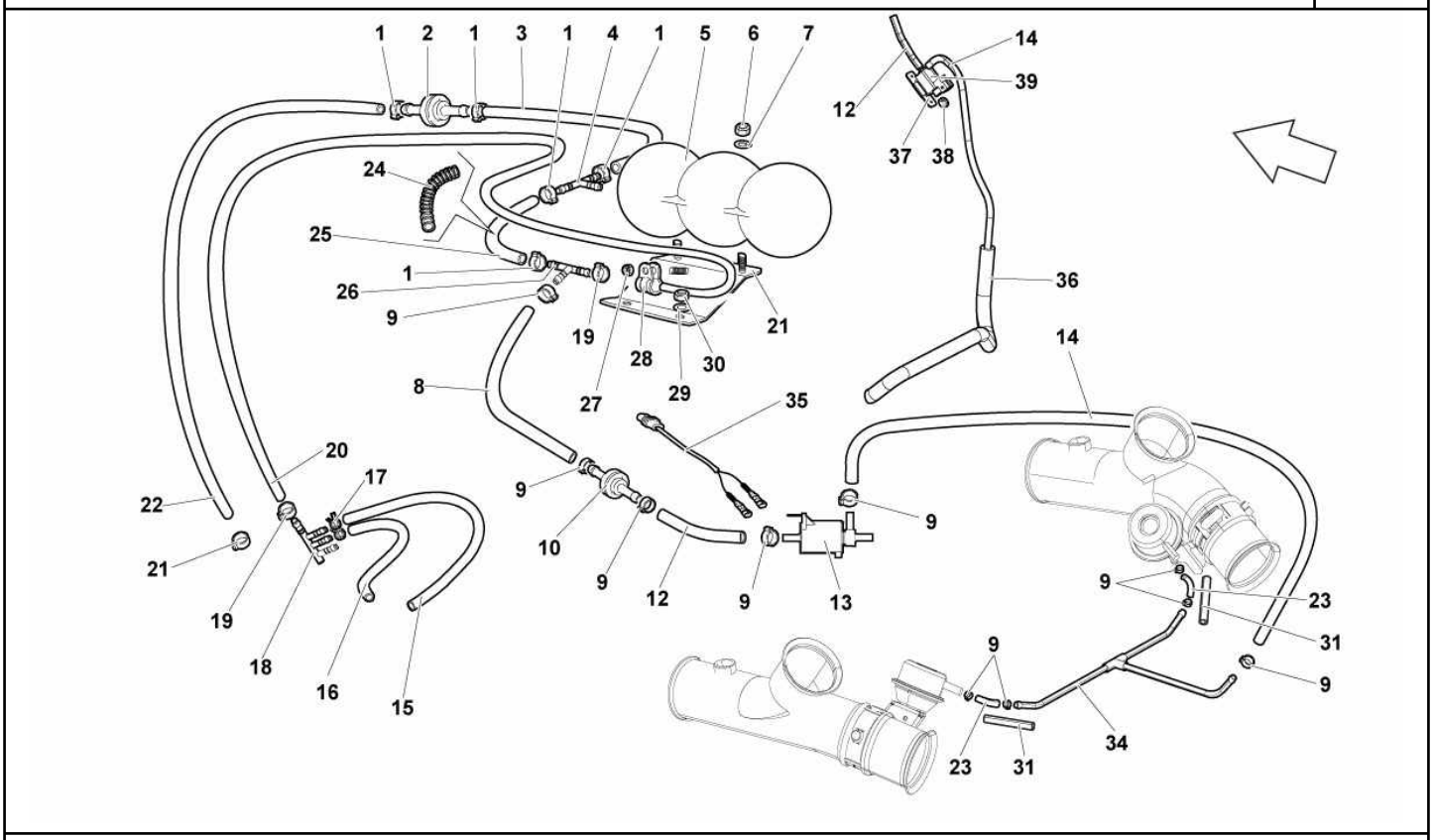

Ref.	Code	Q.ty	Description
1	N 10201901	7	CLAMP
2	410616807	1	VALVE
3	410133781	1	PIPE
4	400611921	1	CONNECTOR
5	443131541	1	VACUUM TANK ASSEMBLY
6	N 0211963	2	NUT M5
7	WHT001187	2	WASHER
8	07M131849A	1	PIPE
9	400127217	10	CLAMP
10	046905291B	1	VALVE
12	400131849A	1	HOSE
13			SOLENOID VALVE (VALID UP TO MODEL YEAR 07)
14	400131843	1	HOSE
15		1	HOSE (SEE TABLE 129.03.00)
16		1	HOSE (SEE TABLE 129.03.00)
17		1	CLAMP (SEE TABLE 129.03.00)
18	07M131585C	1	3-WAY PIPE FOR SOLENOID VALVE/VACUUM PIPES
19	400251189E	2	CLAMP
20	07M131058A	1	PIPE
21	410131687A	1	BRACKET
22	410133606B	1	PIPE
23	07M131849A	1	PIPE
24	400422381	1	SPRING
25	410133345	1	PIPE
26	410253729B	1	CONNECTOR
27	N 01118312	1	NUT
28	N 0206104	1	CLAMP
29			WASHER (VALID UP TO MODEL YEAR 07)

Model : Spare Parts MURCIELAGO SV LP 670-4 Market: USA MY 2010

Group : 251-EXHAUST SYSTEM

Table : 251.04.00-EXHAUST SYSTEM

Ref.	Code	Q.ty	Description
30	N 01508213	2	NUT
31	07M131543B	2	PROTECTION
34	07M133633B	1	PIPE
35			WIRING HARNESS (VALID UP TO MODEL YEAR 07)
36	07M131267	1	PROTECTION
37	400906407	1	BRACKET
38	WHT002959	2	NUT
39	077906283	1	SOLENOID VALVE

Model : Spare Parts MURCIELAGO SV LP 670-4 Market: USA MY 2010

Group : 251-EXHAUST SYSTEM

Table : 251.06.00-EXHAUST SYSTEM

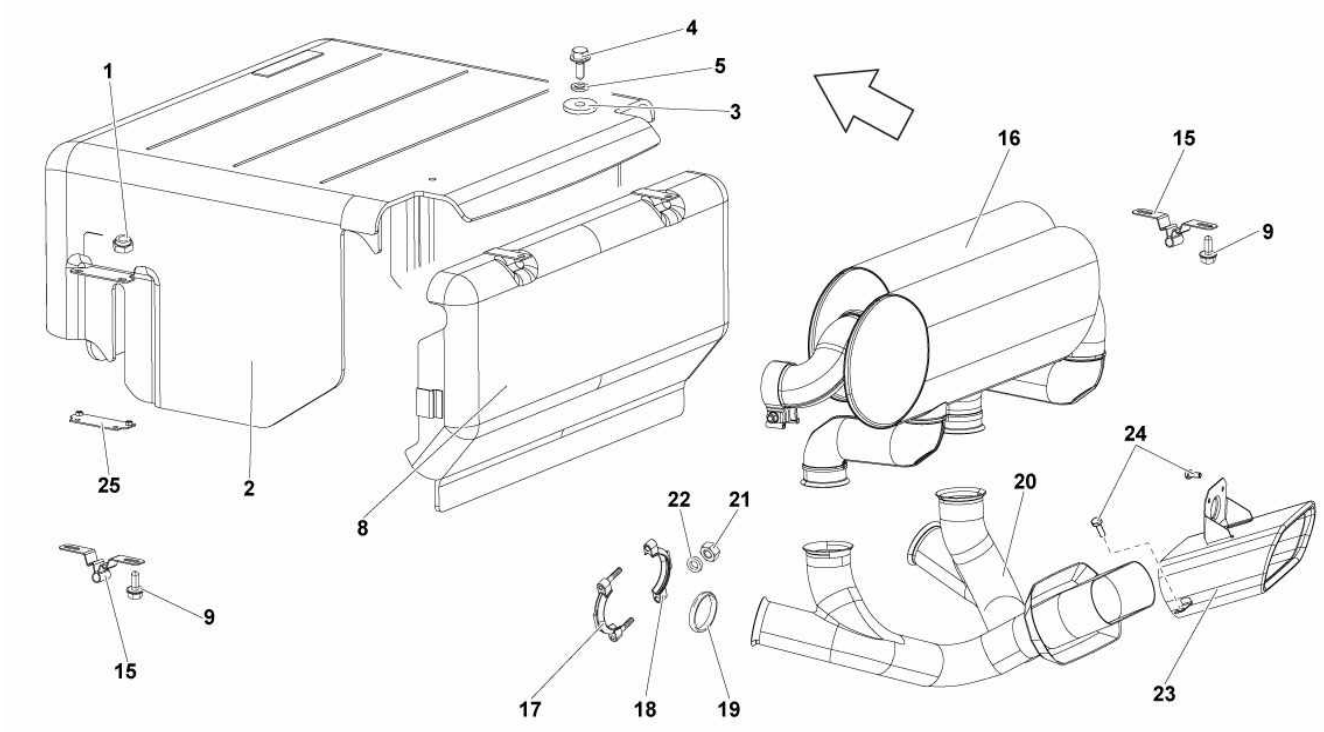

Ref.	Code	Q.ty	Description
1	N 01508213	4	NUT
2	07M251384A	1	PANEL
3	07M251465	2	WASHER
4	N 10718801	2	SCREW
5	N 91115501	2	WASHER
8	07M251383	1	PANEL
9	N 10009507	8	SCREW M6x18
15	429251303A	4	SUPPORT
16	07M251051B	1	REAR SILENCER ASSEMBLY
17	400251143B	4	CLAMP
18	400251143	4	CLAMP
19	400131797	2	DUAL CONE
20	07M251237L	1	EXHAUST TERMINALS
23	429253697	1	EXHAUST TERMINALS COVER
24	N 10536103	4	SCREW M8X16
25	429253379	1	LH BRACKET
25	429253380	1	RH BRACKET

Model : Spare Parts MURCIELAGO SV LP 670-4 Market: USA MY 2010

Group : 251-EXHAUST SYSTEM

Table : 251.01.00-EXHAUST SYSTEM

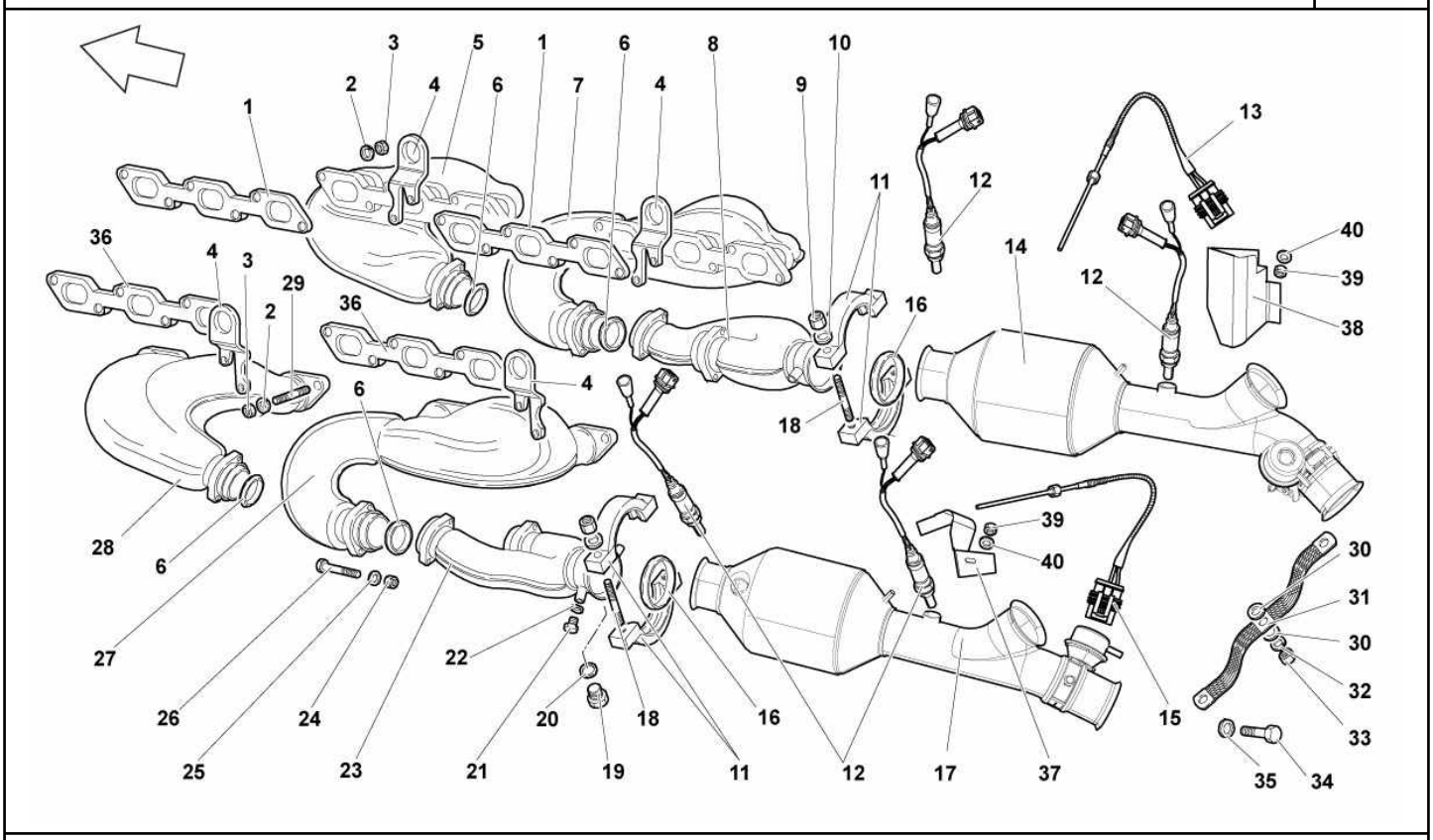

Ref.	Code	Q.ty	Description
1	07M253039A	2	RIGHT GASKET
2	086311519	24	WASHER
3	N 90522002	24	NUT 8X1,25
4	07M199079A	4	HOOK
5	07M253172A	1	FRONT RIGHT EXHAUST MANIFOLD
6	07M251707	4	BI-CONE RING
7	07M253034A	1	REAR RIGHT EXHAUST MANIFOLD
8	07M133776	1	RIGHT THREE-WAY PIPE
9	N 02214621	4	NUT M8
10	WHT001185	8	WASHER 8.4X17.4X1.5
11	417251143	2	COLLAR
12	036906262J	2	FRONT OXYGEN SENSOR
12	06A906262AT	2	REAR OXYGEN SENSOR
13	410919529	1	THERMOCOUPLE 1 - 6
14	07M251718J	1	FRONT RIGHT CATALYST ASSEMBLY
15	410919529A	1	THERMOCOUPLE 7 - 12
16	400131797	4	DUAL CONE
17	07M251717M	1	FRONT LEFT CATALYST ASSEMBLY
18	N 0444416	8	STUD BOLT M8X40
19	400131737	1	PLUG
20	N 91122801	1	WASHER 18,5X24X1,5
21	410251451	2	PLUG
22	N 91116801	2	WASHER 10.50X15.50X1.5
23	07M133775	1	LEFT THREE-WAY PIPE
24	N 02214621	8	NUT M8
25	WHT001185	8	WASHER 8.4X17.4X1.5
26	N 01035213	8	SCREW M8X1,25X55
27	07M253033A	1	REAR LEFT EXHAUST MANIFOLD

Model : Spare Parts MURCIELAGO SV LP 670-4 Market: USA MY 2010

Group : 251-EXHAUST SYSTEM

Table : 251.01.00-EXHAUST SYSTEM

Ref.	Code	Q.ty	Description
28	07M253171A	1	FRONT LEFT EXHAUST MANIFOLD
29	WHT003028	24	STUD BOLT M8X25
30			WASHER 14X8,4X1,5 (VALID UP TO MODEL YEAR 06)
31			CABLE (VALID UP TO MODEL YEAR 06)
32			WASHER 15X8,4X0,5 (VALID UP TO MODEL YEAR 06)
33			NUT M8X1,25X8 (VALID UP TO MODEL YEAR 06)
34			SCREW M8X16 (VALID UP TO MODEL YEAR 06)
35			WASHER 18X8,4X2,5 (VALID UP TO MODEL YEAR 06)
36	07M253039A	2	LEFT GASKET
37	410863553	1	LH PROTECTION
38	410863554	1	RH PROTECTION
39	WHT002953	2	NUT M6
40	N 91115501	2	WASHER 6,2X22X1

Model : Spare Parts MURCIELAGO SV LP 670-4 Market: USA MY 2010

Group : 825-FRAME ELEMENTS

Table : 825.09.00-FRAME ELEMENTS

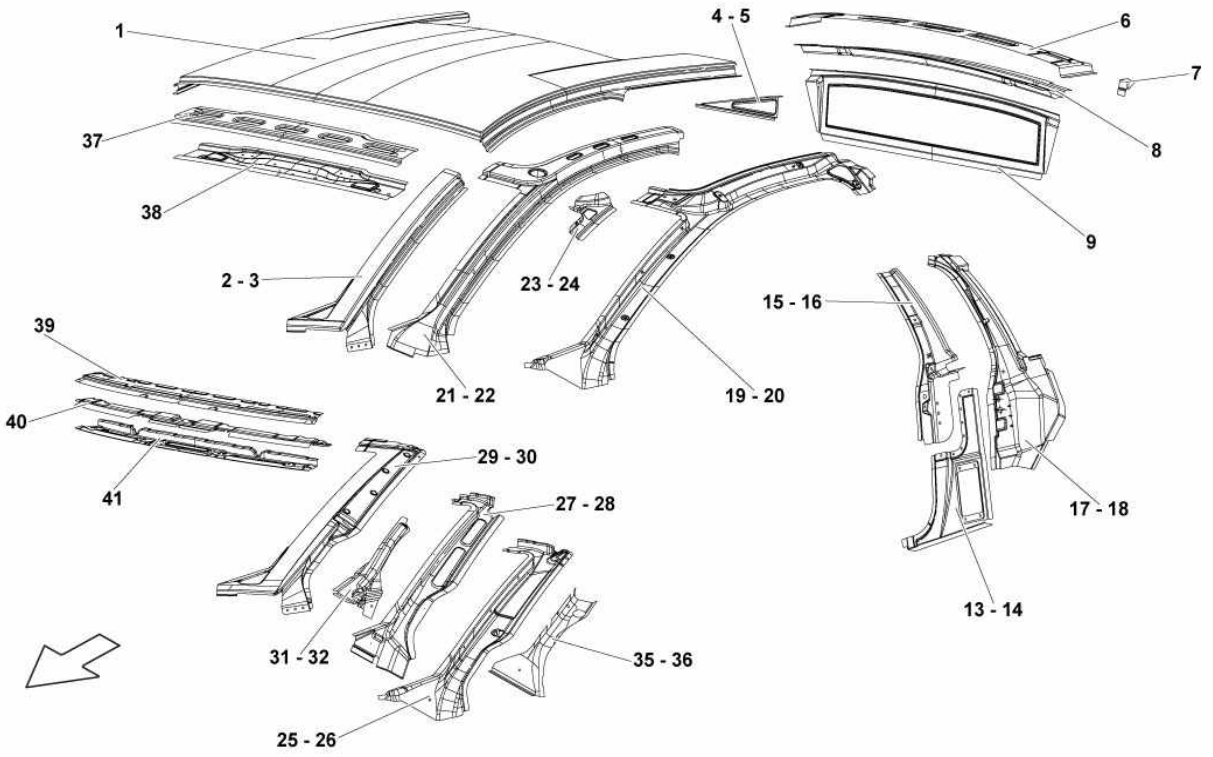

Ref.	Code	Q.ty	Description
1	418817299	1	ROOF
2	418809201	1	LH OUTER PILLAR FRONT
3	418809202	1	RH OUTER PILLAR FRONT
4	418813891	1	LH ANGLE IRON UPPER
5	418813892	1	RH ANGLE IRON UPPER
6	418845502	1	REAR WINDOW CROSSMEMBER
7	418817369	2	ROOF EXTENSION PANEL BRACKET
8	418845501	1	REAR WINDOW CROSSMEMBER INNER
9	418817201	1	REAR WINDOW SURROUND
13	410802599	1	LH - SHEET B INNER LOWER
14	410802600	1	RH - SHEET B INNER LOWER
15	418867285	1	LH - B PILLAR INNER UPPER
16	418867286	1	RH - B PILLAR INNER UPPER
17	418809607	1	LH B PILLAR REINFORCEMENT
18	418809608	1	RH B PILLAR REINFORCEMENT
19	418853171	1	LH A PILLAR INNER UPPER
20	418853172	1	RH A PILLAR INNER UPPER
21	418809193	1	LH A PILLAR RENFORCEMENT
22	418809194	1	RH A PILLAR RENFORCEMENT
23	418810207	1	LH REINFORCEMENT ON A PILLAR INNER UPPER
24	418810208	1	RH REINFORCEMENT ON A PILLAR INNER UPPER
25			LH - A PILLAR INNER UPPER (VALID FOR A DIFFERENT MODEL)
26			RH - A PILLAR INNER UPPER (VALID FOR A DIFFERENT MODEL)
27			LH A PILLAR REINFORCEMENT (VALID FOR A DIFFERENT MODEL)
28			RH A PILLAR REINFORCEMENT (VALID FOR A DIFFERENT MODEL)
29			LH OUTER PILLAR FRONT (VALID FOR A DIFFERENT MODEL)
30			RH OUTER PILLAR FRONT (VALID FOR A DIFFERENT MODEL)

Model : Spare Parts MURCIELAGO SV LP 670-4 Market: USA MY 2010

Group : 825-FRAME ELEMENTS

Table : 825.09.00-FRAME ELEMENTS

Ref.	Code	Q.ty	Description
31			LH - A PILLAR LOWER REINFORCEMENT (VALID FOR A DIFFERENT MODEL)
32			RH - A PILLAR LOWER REINFORCEMENT (VALID FOR A DIFFERENT MODEL)
35			LH - A PILLAR INNER REINFORCEMENT (VALID FOR A DIFFERENT MODEL)
36			RH - A PILLAR INNER REINFORCEMENT (VALID FOR A DIFFERENT MODEL)
37	418805573	1	WINDSCREEN CROSSMEMBER
38	418845425	1	WINDSCREEN CROSSMEMBER INNER
39			WINDSCREEN CROSSMEMBER (VALID FOR A DIFFERENT MODEL)
40			WINDSCREEN CROSSMEMBER REINFORCMENT (VALID FOR A DIFFERENT MODEL)
41			WINDSCREEN CROSSMEMBER INNER (VALID FOR A DIFFERENT MODEL)

Model : Spare Parts MURCIELAGO SV LP 670-4 Market: USA MY 2010

Group : 825-FRAME ELEMENTS

Table : 825.08.00-FRAME ELEMENTS

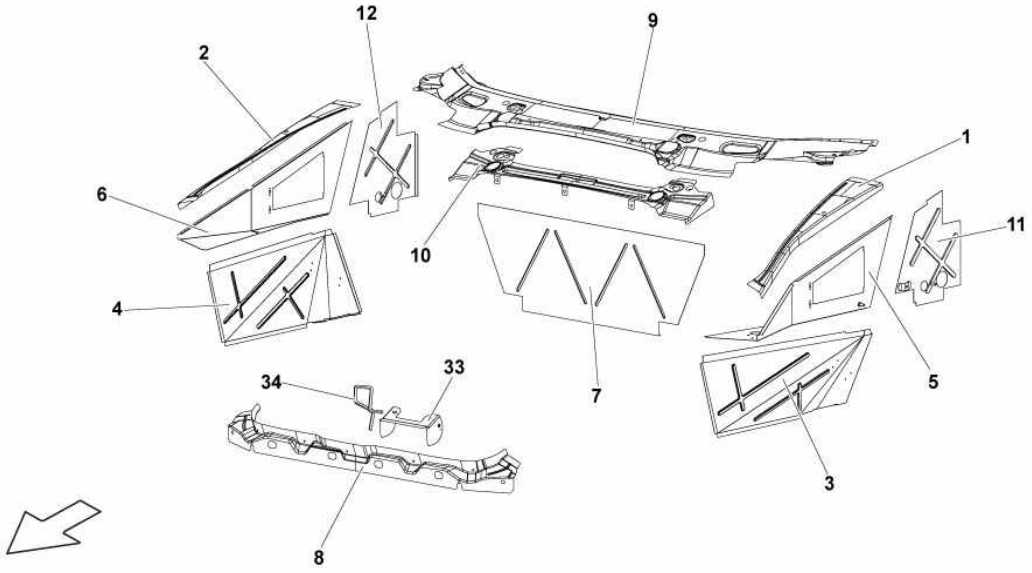

Ref.	Code	Q.ty	Description
1	410807055	1	LH SHEET
2	410807056	1	RH SHEET
3	410805029	1	LH SHEET
4	410805030	1	RH SHEET
5	410805085A	1	LH SHEET
6	410805086	1	RH SHEET
7	429805597	1	SHEET
8	418801123	1	FRONT PANEL LUGGAGE AREA SHEET
9	429805117	1	WINDSCREEN FRAME LOWER
10	410803537A	1	WINDSCREEN FRAME LOWER INNER
11	429806761	1	LH SHEET
12	429806762	1	RH SHEET
33	413806453	1	BRACKET
34	410805759	1	HOOK

Model : Spare Parts MURCIELAGO SV LP 670-4 Market: USA MY 2010

Group : 825-FRAME ELEMENTS

Table : 825.01.00-FRAME ELEMENTS

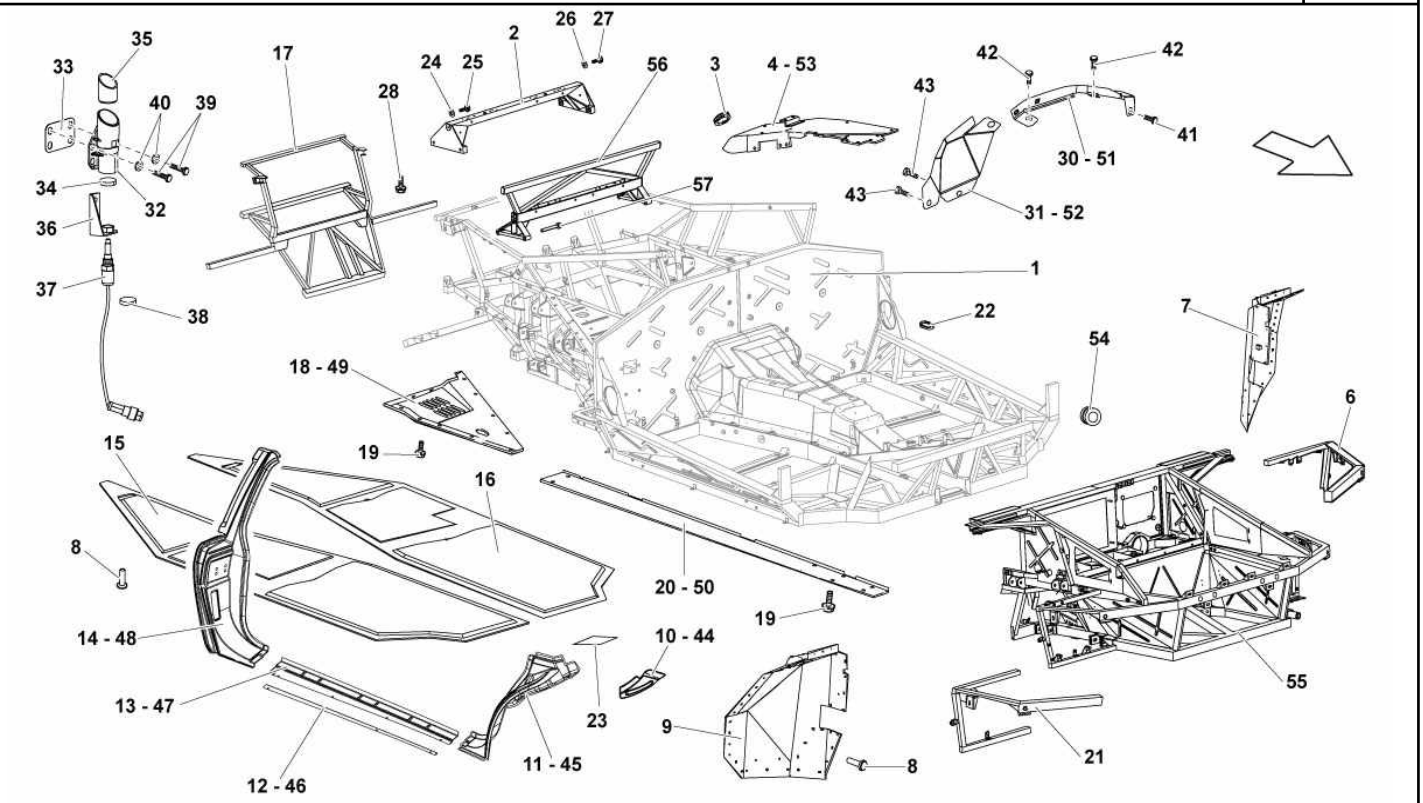

Ref.	Code	Q.ty	Description
1			COMPLETE FRAME (CANNOT BE SOLD SEPARATELY)
2			CROSS MEMBER (NOT FOR SUPERVELOCE MODEL)
3	400821189	4	PLUG
4	429813766	1	RH SHEET
6			LEFT FRONT FRAME (NOT FOR SUPERVELOCE MODEL)
7	418809153	1	LEFT FRONT WHEELARCH, REAR PART
8	410821316	202	RIVET
8	410821316	66	RIVET
9	418809154	1	RIGHT FRONT WHEELARCH, REAR PART
10	410809440A	1	RIGID UPPER CONNECTION
11	410805047	1	FRONT LEFT COVERING
12	410831165	1	OUTER LOWER LEFT PROFILE
13	410801256	1	CENTER RIGHT COVERING
14	418868813	1	REAR LEFT COVERING
15	410825219	1	BOARD
16	410825220	1	BOARD
17			REAR FRAME (NOT FOR SUPERVELOCE MODEL)
18	410825216	1	RIGHT REAR SIDE MEMBER BOTTOM
19	WHT003069	11	SCREW M6X20
20	410825211	1	LEFT FRONT SIDE MEMBER BOTTOM
21			RIGHT FRONT FRAME (NOT FOR SUPERVELOCE MODEL)
22	410821801	1	PLUG
23	410837267	2	LID
24			WASHER (NOT FOR SUPERVELOCE MODEL)
25			SCREW M8X45 (NOT FOR SUPERVELOCE MODEL)
26			WASHER 18X8,4X2,5 (NOT FOR SUPERVELOCE MODEL)
27			SCREW M8X50 (NOT FOR SUPERVELOCE MODEL)
28			SCREW M8X45 (NOT FOR SUPERVELOCE MODEL)

Model : Spare Parts MURCIELAGO SV LP 670-4 Market: USA MY 2010

Group : 825-FRAME ELEMENTS

Table : 825.01.00-FRAME ELEMENTS

Ref.	Code	Q.ty	Description
30			RH SHEET (FOR LP640 ROADSTER MODEL)
31			RH SHEET (FOR LP640 ROADSTER MODEL)
32			SUPPORT (FOR LP640 ROADSTER MODEL)
33			SPACER (FOR LP640 ROADSTER MODEL)
34			RUBBER BUFFER (FOR LP640 ROADSTER MODEL)
35			BUSHING (FOR LP640 ROADSTER MODEL)
36			SUPPORT (FOR LP640 ROADSTER MODEL)
37			SWITCH (FOR LP640 ROADSTER MODEL)
38			RUBBER BUFFER (FOR LP640 ROADSTER MODEL)
39			SCREW M5X14 (FOR LP640 ROADSTER MODEL)
40			WASHER (FOR LP640 ROADSTER MODEL)
41			SCREW M5X18 (FOR LP640 ROADSTER MODEL)
42			SCREW M6X15 (FOR LP640 ROADSTER MODEL)
43			SCREW M5X18 (FOR LP640 ROADSTER MODEL)
44	410809439A	1	RIGID UPPER CONNECTION
45	410805048	1	FRONT RIGHT COVERING
46	410831166	1	OUTER LOWER RIGHT PROFILE
47	410801255	1	CENTER LEFT COVERING
48	418868814	1	REAR RIGHT COVERING
49	410825215A	1	LEFT REAR SIDE MEMBER BOTTOM
50	410825210	1	RIGHT FRONT SIDE MEMBER BOTTOM
51			LH SHEET (FOR LP640 ROADSTER MODEL)
52			LH SHEET (FOR LP640 ROADSTER MODEL)
53	429813765	1	LH SHEET
54	410805746	1	FAIRLEAD (E-GEAR)
55			FRONT FRAME (CANNOT BE SOLD SEPARATELY)
55			FRONT FRAME (NOT FOR SUPERVELOCE MODEL)
56	429813235	1	CROSS MEMBER
57	N 91045502	8	SCREW M8X65

Model : Spare Parts MURCIELAGO SV LP 670-4 Market: USA MY 2010

Group : 825-FRAME ELEMENTS

Table : 825.03.00-FRAME FLOOR PANELS

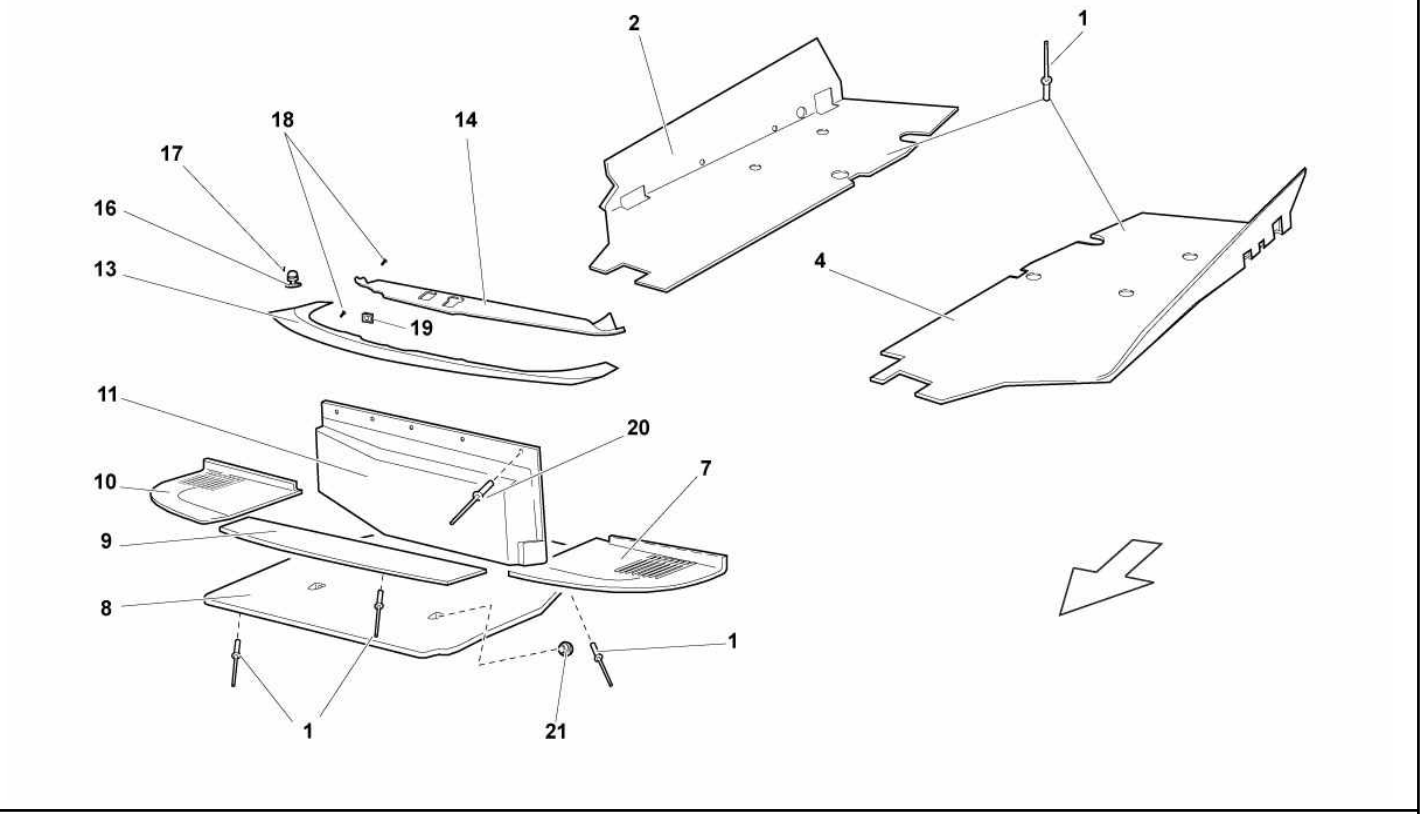

Ref.	Code	Q.ty	Description
1	410806225	85	RIVET
2	418825208	1	BOARD
4	418825209	1	BOARD
7	410825201C	1	BOARD
8	410857367	1	BOARD
9	410825205A	1	CLOSING
10	410825202C	1	BOARD
11	429825207	1	FRONT HOOD COMPARTMENT VERTICAL FRONT PART
13	410857161C	1	CLOSING
14	410837089A	1	CLOSING
16	8L0827249	2	ADJUSTING SLEEVE
17	WHT003102	4	SCREW 2.9X13
18	N 91049601	7	SCREW 4.2X15.0
19	N 90834301	5	CLIP 4.8X17.00X11.3
20	N 10080501	10	RIVET
21	410823747	3	PLUG

Model : Spare Parts MURCIELAGO SV LP 670-4 Market: USA MY 2010

Group : 407-FRONT CROSSPIECE

Table : 407.03.00-FRONT ARMS

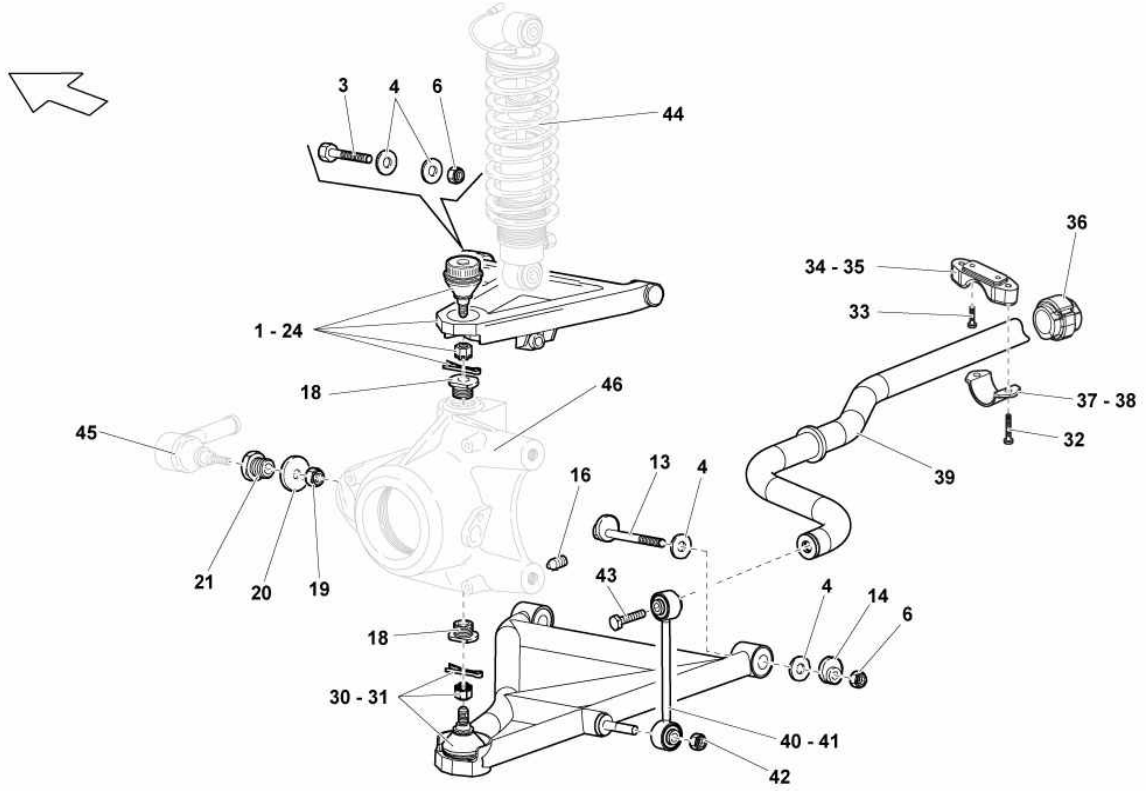

Ref.	Code	Q.ty	Description
1	410407505B	1	LH UPPER ARM
3	WHT002637	4	SCREW M12X1,25X75
4	410407295	1	1 MM SHIM
4	410407295A	1	1.5 MM SHIM
4	410407295B	1	2 MM SHIM
4	410407295C	1	2.5 MM SHIM
4	410407295D	1	3 MM SHIM
6	WHT003461	4	NUT M12X1.25
13	410407127A	4	SCREW
14	410407135A	4	CAM
16	WHT002941	2	SCREW M6X1X10
18	410407171C	2	BUSH
19	WHT000915	2	NUT 10X1,25
20	WHT000919	2	WASHER 10.5X32.0X3.0
21	410419121B	1	BUSH
24	410407506B	1	RH UPPER ARM
30	410407151D	1	LH LOWER ARM
31	410407152D	1	RH LOWER ARM
32	N 10049308	4	SCREW M8X20
33	N 10713801	4	SCREW M6X16
34	400411031N	1	U-BOLT (LEFT)
35	400411031N	1	U-BOLT (RIGHT-HAND)
36	4D0411327G	2	BUSHING
37	4D0411336G	1	U-BOLT (RIGHT-HAND)
38	4D0411336G	1	U-BOLT (LEFT)
39	410411309A	1	STABILIZER BAR
40	410411317B	1	CONNECTING ROD (RIGHT-HAND)
41	410411317A	1	CONNECTING ROD (LEFT)

Model : Spare Parts MURCIELAGO SV LP 670-4 Market: USA MY 2010

Group : 407-FRONT CROSSPIECE

Table : 407.03.00-FRONT ARMS

Ref.	Code	Q.ty	Description
42	N 10286110	2	NUT M10
43	N 10699401	2	SCREW M10X50
44			SHOCK ABSORBER (SEE TABLE 411.01.00)
45			BALL JOINT COUPLING (SEE TABLE 422.02.00)
46			HUB HOLDER (SEE TABLE 407.02.00)

Model : Spare Parts MURCIELAGO SV LP 670-4 Market: USA MY 2010

Group : 615-BRAKES DISCS

Table : 615.02.00-FRONT BRAKES - CARBOCERAMIC

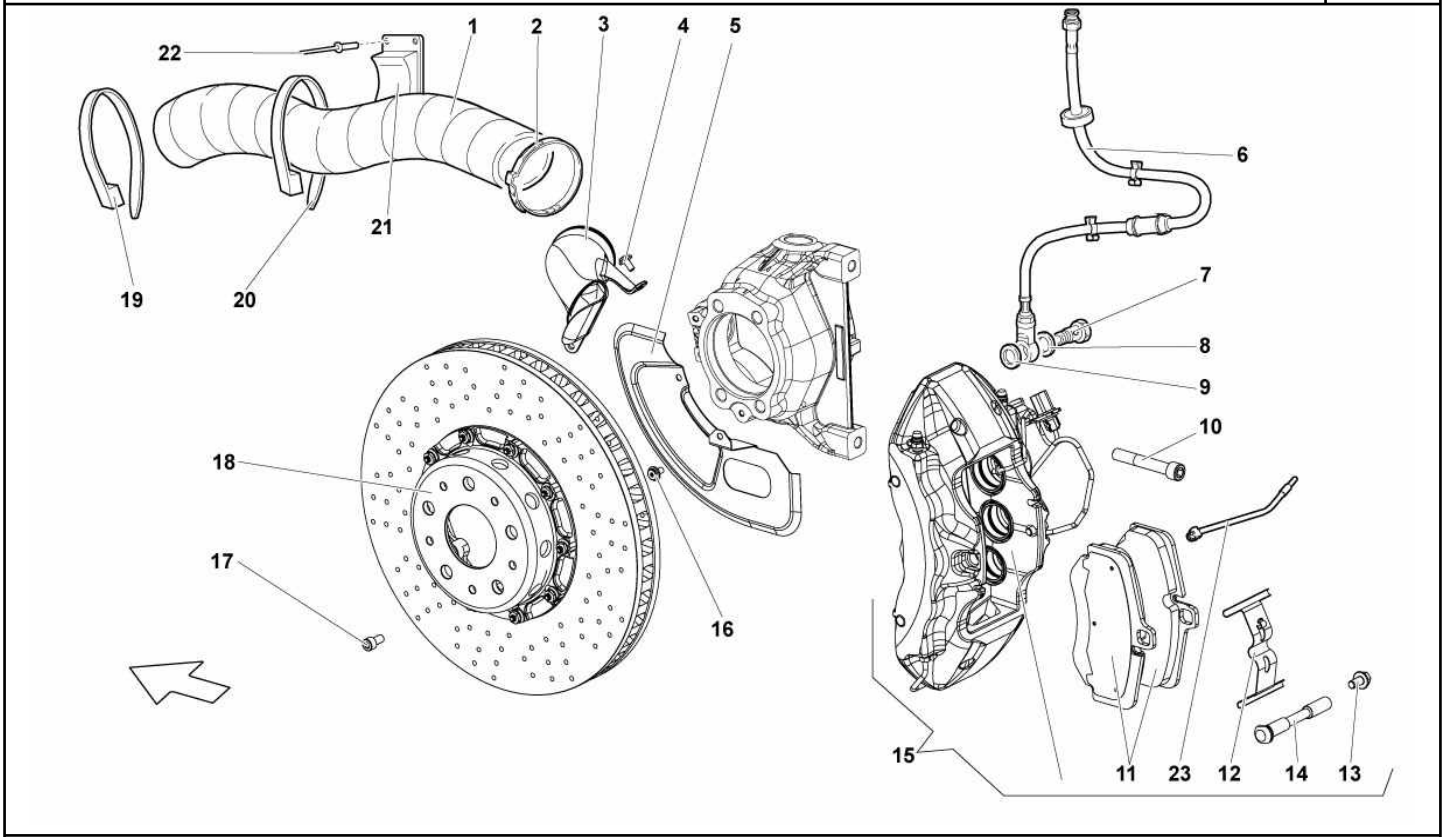

Ref.	Code	Q.ty	Description
1	410611359	2	PIPE
2	N 0245226	2	CLAMP
3	410615447	1	LH CONVEYOR
3	410615448	1	RH CONVEYOR
4	1Z0860505C	4	SCREW M6X12
5	410407721A	1	LH PROTECTION
5	410407722A	1	RH PROTECTION
6	410611775A	2	HOSE
7	WHT003303	2	SCREW WITH HOLE
8	WHT001191	2	WASHER
9	WHT001191	2	WASHER
10	WHT001330A	4	SCREW M12X1.5X77X30
11	4E0698151G	1	BRAKE PAD SET
12			CLIP (CANNOT BE SOLD SEPARATELY - SEE REF. 15)
13			SCREW (CANNOT BE SOLD SEPARATELY - SEE REF. 15)
14			JOURNAL (CANNOT BE SOLD SEPARATELY - SEE REF. 15)
15	410615105R	1	BLACK LH FRONT BRAKE CALIPER
15	410615106R	1	BLACK RH FRONT BRAKE CALIPER
15	410615105T	1	LH FRONT BRAKE CALIPER - SILVER
15	410615105AD	1	ORANGE LH FRONT BRAKE CALIPER
15	410615106AD	1	ORANGE RH FRONT BRAKE CALIPER
15	410615106T	1	RH FRONT BRAKE CALIPER - SILVER
15	410615105AB	1	YELLOW LH FRONT BRAKE CALIPER
15	410615106AB	1	YELLOW RH FRONT BRAKE CALIPER
16	1Z0860505C	4	SCREW M6X12
17	N 90972501	6	SCREW M8X16
18	410615301B	1	LH BRAKE DISK
18	410615302B	1	RH BRAKE DISK

Model : Spare Parts MURCIELAGO SV LP 670-4 Market: USA MY 2010

Group : 615-BRAKES DISCS

Table : 615.02.00-FRONT BRAKES - CARBOCERAMIC

Ref.	Code	Q.ty	Description
19	410616713	2	CLAMP
20	410412177	2	CLAMP
21	410805889	1	LEFT SUPPORT
21	410805890	1	RIGHT SUPPORT
22	410807250	8	RIVET
23	400698137	2	ELECTRIC CABLE

Model : Spare Parts MURCIELAGO SV LP 670-4 Market: USA MY 2010

Group : 807-BUMPERS

Table : 807.05.00-FRONT BUMPERS

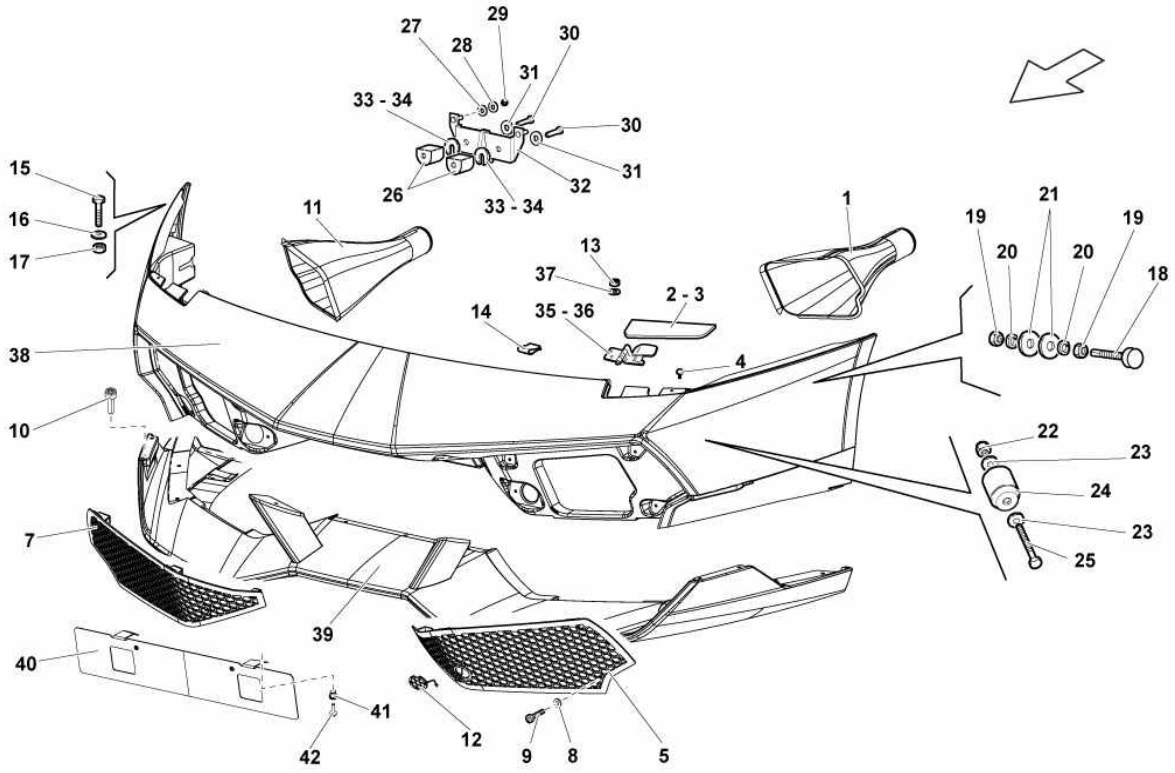

Ref.	Code	Q.ty	Description
1	429807605	1	LEFT FRONT BRAKE AIR BUMPER CONVEYOR
2	410955276C	1	RIGHT HEADLIGHT WASHER COVER LID
3	410955275C	1	LEFT HEADLIGHT WASHER COVER LID
4	410807895	2	PLUG
5	429807681	1	LEFT GRID
7	429807682	1	RIGHT GRID
8	N 10663401	10	WASHER
9	N 10621601	10	SCREW M4X12
10	N 90319404	15	SCREW M6X12
11	429807606	1	RIGHT FRONT BRAKE AIR BUMPER CONVEYOR
12	410807241	1	COVER
13	N 0211963	4	NUT M5
14	410807794	9	SPRING
15	N 90659905	2	SCREW M4X16
16	WHT003092	2	WASHER 4.3X16X1.5
17	N 01100845	2	NUT M8X1,25X6,5
18	410807699	2	JOURNAL
19	N 01100840	2	NUT M8
20	N 0152785	2	WASHER
21	WHT001942	4	WASHER 8.5X32X2.5
22	N 01118410	2	NUT M8
23	N 90179103	4	WASHER 18X8,4X2,5
24	410807263A	2	FRONT BUMPER SIDE RUBBER
25	N 10027004	2	SCREW M8X90
26	410807263	4	RUBBER BUFFER
27	410807047	6	WASHER 40X10X10
28	N 90107607	12	WASHER 8.20X18.0X2.00
29	N 01118410	6	NUT M8

Model : Spare Parts MURCIELAGO SV LP 670-4 Market: USA MY 2010

Group : 807-BUMPERS

Table : 807.05.00-FRONT BUMPERS

Ref.	Code	Q.ty	Description
30	N 10027004	4	SCREW M8X90
31	N 90179103	4	WASHER 18X8,4X2,5
32	410807133A	2	FRONT BUMPER FIXING BRACKET ASSEMBLY
33	410807567	4	5.0 MM SHIM
34	410807255	4	3.0 MM SHIM
35	410955259	1	LEFT HEADLIGHT WASHER LID HINGE ASSEMBLY
36	410955260	1	RIGHT HEADLIGHT WASHER LID HINGE ASSEMBLY
37	WHT001187	8	WASHER 10X5.3X1
38	429807105A	1	FRONT BUMPER - UPPER
39	429807429	1	FRONT BUMPER - LOWER
40	429807287B	1	LICENSE PLATE HOLDER
41	400807995	2	RUBBER BUSHING
42	WHT000757	2	SCREW M6X16

Model : Spare Parts MURCIELAGO SV LP 670-4 Market: USA MY 2010

Group : 409-FRONT DIFFERENTIAL

Table : 409.01.00-FRONT DIFFERENTIAL ASSEMBLY

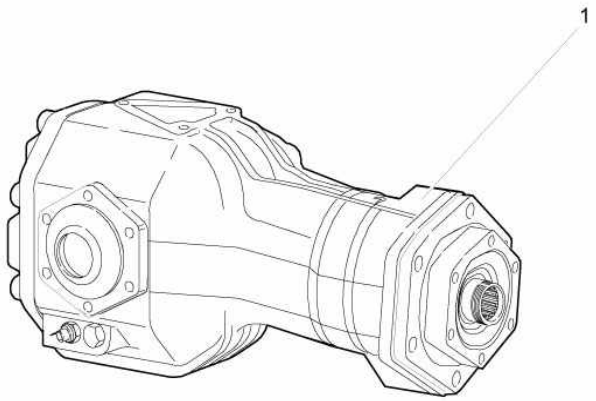

Ref.	Code	Q.ty	Description
1	45Y10Q1470	1	FRONT DIFFERENTIAL

Model : Spare Parts MURCIELAGO SV LP 670-4 Market: USA MY 2010

Group : 409-FRONT DIFFERENTIAL

Table : 409.03.00-FRONT DIFFERENTIAL CASE

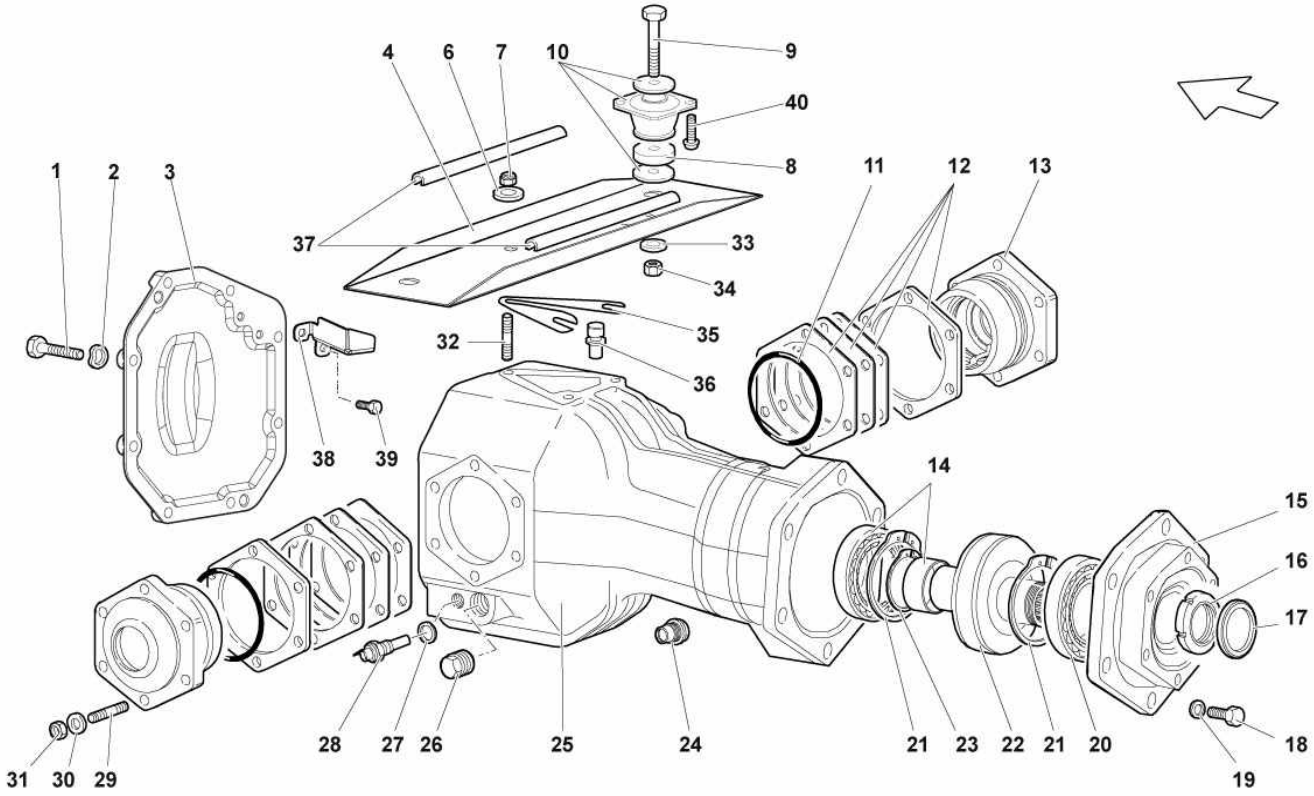

Ref.	Code	Q.ty	Description
1	N 10545402	8	SCREW M8X25.00-S1-N
2	WHT001514	8	WASHER
3	01S409410B	1	COVER
4	410805153	1	SUPPORT
6	WHT001942	3	WASHER
7	N 01118410	3	NUT M8
8	410801499	2	SPACER
9	WHT002639	2	SCREW M12X1.25X70X30
10	410805991	2	SUPPORT
11	WHT002158	2	SEAL RING
12	01S409448D	3	0.050 MM ADJUSTMENT SHIM
12	01S409448C	3	0.075 MM ADJUSTMENT SHIM
12	01S409448G	1	1.0 MM ADJUSTMENT SHIM
12	01S409448B	2	2.0 MM ADJUSTMENT SHIM
12	01S409448H	2	2.0 MM ADJUSTMENT SHIM
13	01S409828A	2	FLANGE
14	01S409770	1	BEARING
15	01S409129A	1	FLANGE
16	01S409761	1	RING NUT
17	01S409887	1	SEAL RING
18	N 10545402	6	SCREW M8X25.00-S1-N
19	WHT001514	6	WASHER
20		1	BEARING
21	N 0123501	2	RETAINING RING
22	01S409435B	1	VISCOUS COUPLING
23	01S409297	1	SEAL RING
24	01S409965	1	MAGNETIC PLUG
25	01S409149A	1	FRONT DIFFERENTIAL CASE

Model : Spare Parts MURCIELAGO SV LP 670-4 Market: USA MY 2010

Group : 409-FRONT DIFFERENTIAL

Table : 409.03.00-FRONT DIFFERENTIAL CASE

Ref.	Code	Q.ty	Description
26	086301141	1	PLUG
27	N 0138492	1	WASHER
28	01S919529	1	SENSOR
29	WHT003164	12	STUD BOLT M8X35
30	WHT001514	12	WASHER
31	N 01100845	12	NUT M8X1,25X6,5
32	WHT003164	3	STUD BOLT M8X35
33	N 90840802	2	WASHER
34	WHT003355	2	NUT M12X1.25
35	01S409267F	4	SPACER
36	086301047D	1	OIL BREATHER PIPE
37	400133338	2	GASKET
38	01S409194	1	BULKHEAD
39	N 90305304	2	SCREW M6X10.0
40	N 90929202	4	SCREW M10X20.0

Model : Spare Parts MURCIELAGO SV LP 670-4 Market: USA MY 2010

Group : 409-FRONT DIFFERENTIAL

Table : 409.02.00-FRONT DIFFERENTIAL

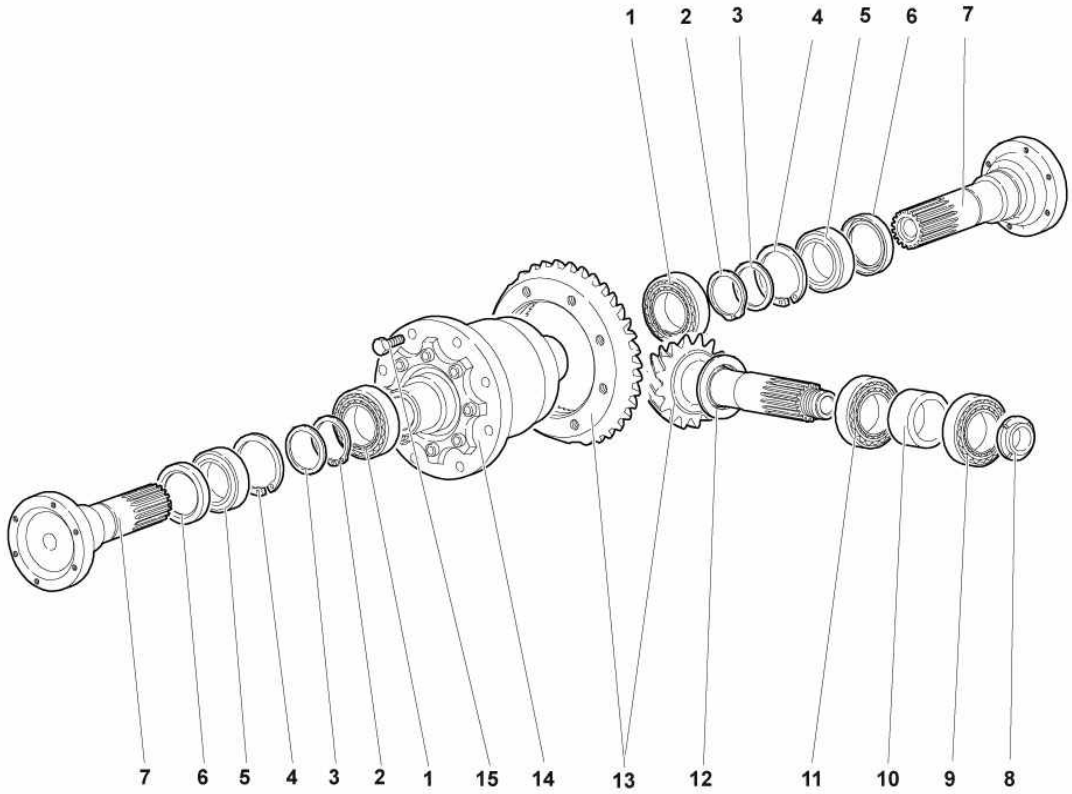

Ref.	Code	Q.ty	Description
1	01S409123A	2	BEARING
2	N 0123751	2	RETAINING RING
3	01S409228	2	SPACER
4	N 0123191	2	RETAINING RING
5	01S409144	2	BEARING
6	01S409209	2	SEAL RING
7	01S409355A	2	FLANGE
8	01S409739A	1	RING NUT
9	01S409563	1	BEARING
10	01S409223A	1	16.45 SPACER
10	01S409223B	1	16.50 SPACER
10	01S409223C	1	16.55 SPACER
10	01S409223D	1	16.60 SPACER
10	01S409223E	1	16.65 SPACER
10	01S409223F	1	16.70 SPACER
10	01S409223G	1	16.75 SPACER
10	01S409223H	1	16.80 SPACER
10	01S409223J	1	16.85 SPACER
10	01S409223K	1	16.90 SPACER
10	01S409223L	1	16.95 SPACER
10	01S409223M	1	17.00 SPACER
10	01S409223N	1	17.05 SPACER
10	01S409223P	1	17.10 SPACER
10	01S409223Q	1	17.15 SPACER
10	01S409223R	1	17.20 SPACER
11	0B9525193	1	BEARING
12	01S409227D	1	0.15 ADJUSTMENT SHIM
12	01S409227C	1	0.20 ADJUSTMENT SHIM

Model : Spare Parts MURCIELAGO SV LP 670-4 Market: USA MY 2010

Group : 409-FRONT DIFFERENTIAL

Table : 409.02.00-FRONT DIFFERENTIAL

Ref.	Code	Q.ty	Description
12	01S409227B	1	0.25 ADJUSTMENT SHIM
12	01S409227A	1	0.3 ADJUSTMENT SHIM
12	01S409227	3	0.5 ADJUSTMENT SHIM
13	01S409143C	1	BEVEL GEAR PAIR
14	01S409755A	1	FRONT DIFFERENTIAL
15	WHT002650	8	SCREW M10X1.25X20

Model : Spare Parts MURCIELAGO SV LP 670-4 Market: USA MY 2010

Group : 407-FRONT CROSSPIECE

Table : 407.02.00-FRONT DRIVE SHAFT

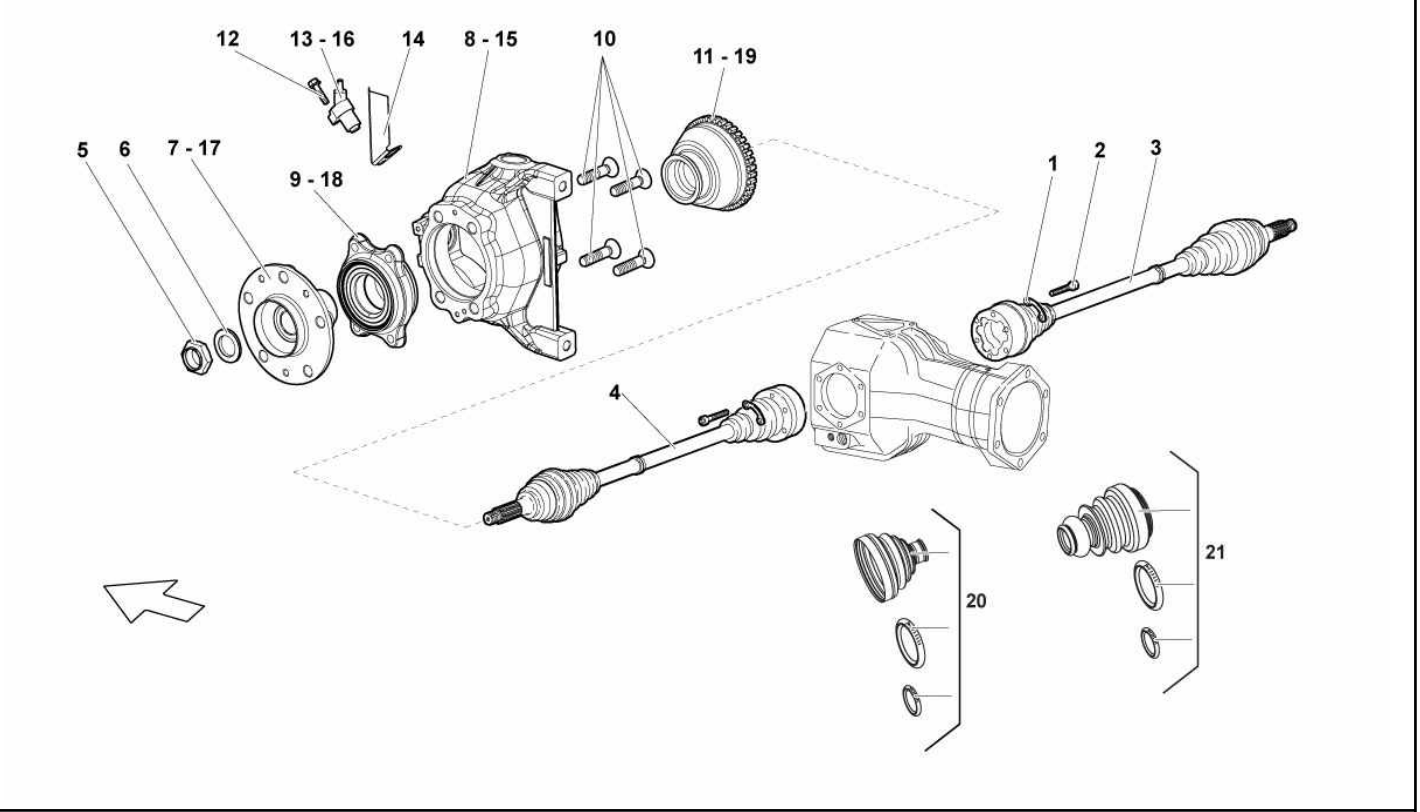

Ref.	Code	Q.ty	Description
1	8E0407357	6	PLATE
2	WHT003312	12	SCREW
3	410407302C	1	RH FRONT DRIVE SHAFT
4	410407301C	1	LH FRONT DRIVE SHAFT
5	410407338	2	NUT
6	410407631	2	WASHER
7	410407613	1	HUB (LEFT)
8	410407257A	1	LH HUB HOLDER (CERAMIC BRAKE)
9	4E0407625D	1	BEARING (LEFT)
10	WHT000237	8	SCREW
11	410614149	1	TONE WHEEL (LEFT)
12	N 10285602	2	SCREW M6X25
13	410927801C	1	ABS SENSOR (LEFT)
14	410614753	1	LEFT HEAT SHIELD (CERAMIC BRAKE)
14	410614754	1	RIGHT HEAT SHIELD (CERAMIC BRAKE)
15	410407258A	1	RH HUB HOLDER (CERAMIC BRAKE)
16	410927801C	1	ABS SENSOR (RIGHT-HAND)
17	410407613	1	HUB (RIGHT-HAND)
18	4E0407625D	1	BEARING (RIGHT-HAND)
19	410614149	1	TONE WHEEL (RIGHT-HAND)
20	410498099	2	KIT AXELSHAFT FORE OUTER
21	410498099A	2	KIT AXELSHAFT FORE INNER

Model : Spare Parts MURCIELAGO SV LP 670-4 Market: USA MY 2010

Group : 821-FRONT AND REAR FENDER

Table : 821.08.00-FRONT FENDER

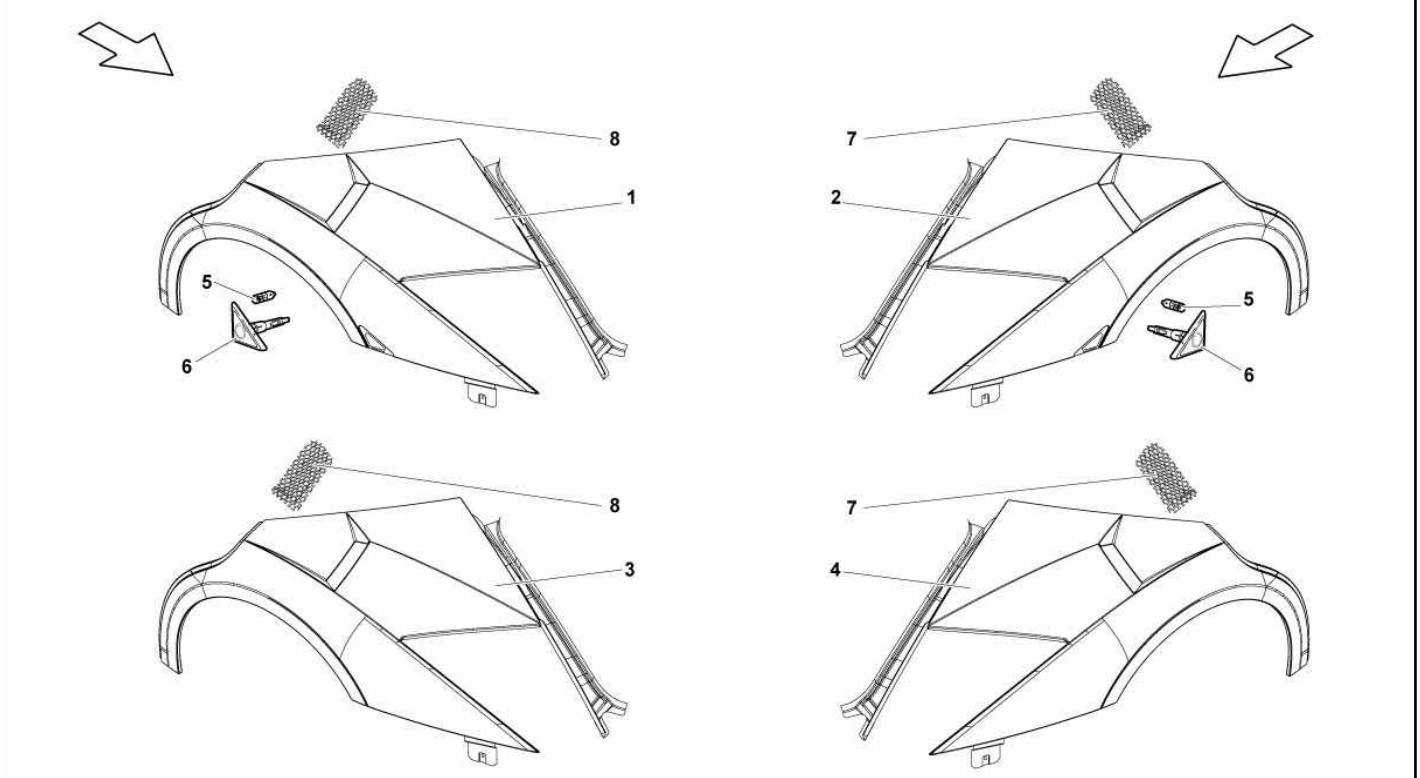

Ref.	Code	Q.ty	Description
1			RIGHT FRONT SIDE FENDER (NOT FOR A MARKET USA/CANADA)
2			LEFT FRONT SIDE FENDER (NOT FOR A MARKET USA/CANADA)
3	429821106A	1	RIGHT FRONT SIDE FENDER
4	429821105A	1	LEFT FRONT SIDE FENDER
5			LAMP (NOT FOR A MARKET USA/CANADA)
6			SIDE TURN INDICATOR LIGHT (NOT FOR A MARKET USA/CANADA)
7	429805935	1	LEFT GRID
8	429805936	1	RIGHT GRID

Model : Spare Parts MURCIELAGO SV LP 670-4 Market: USA MY 2010

Group : 823-FRONT HOOD

Table : 823.01.00-FRONT HOOD

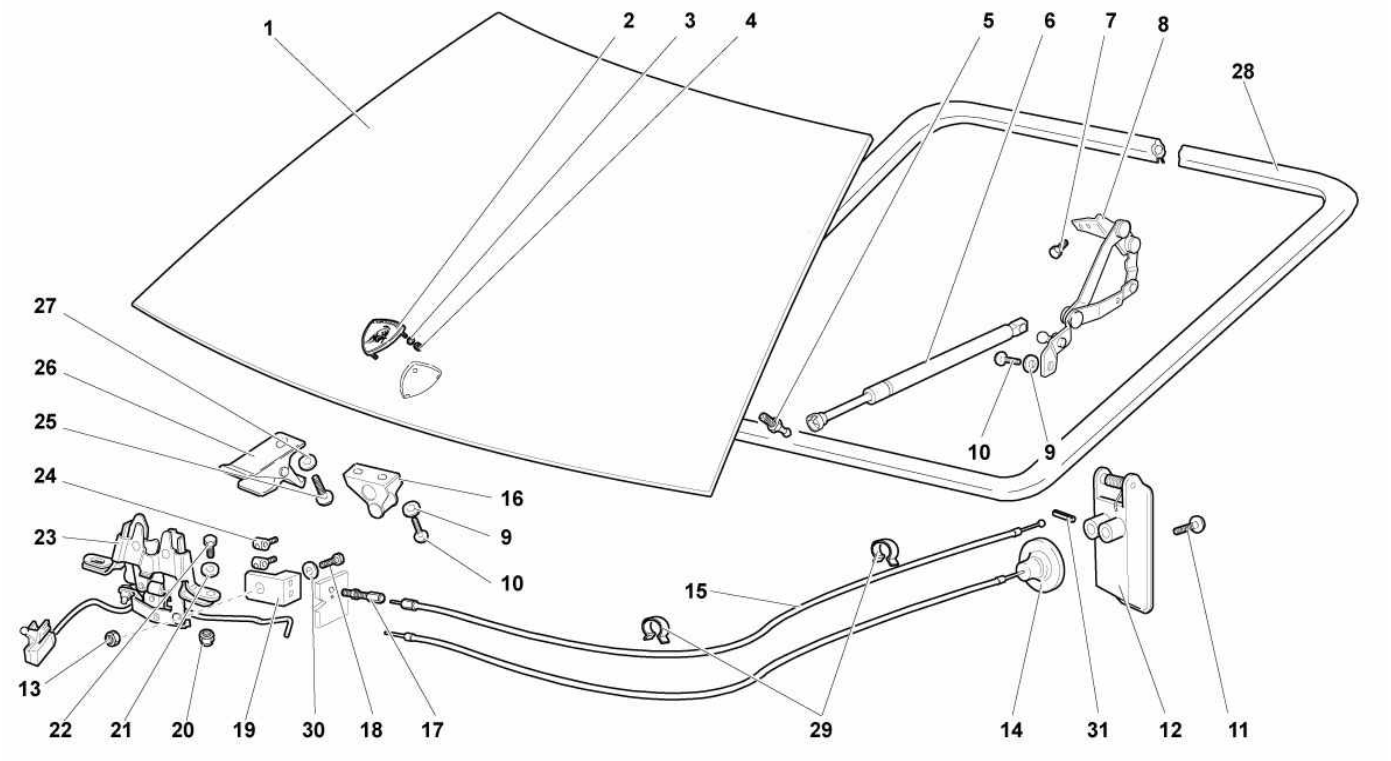

Ref.	Code	Q.ty	Description
1	410823021	1	FRONT HOOD ASSEMBLY
2	400853745C	1	LAMBORGHINI ORNAMENT
3	400853139	2	CLIP
4	WHT003570	2	NUT M3
5	410827345	2	JOURNAL
6	400823359A	2	FRONT HOOD GAS CYLINDER
7	N 90319404	2	SCREW M6X12
8	410805383A	1	FRONT HOOD LEFT HINGE ASSEMBLY
8	410805384A	1	FRONT HOOD RIGHT HINGE ASSEMBLY
9			WASHER (VALID FOR A DIFFERENT MARKET/MODEL YEAR)
10	1Z0860505C	2	SCREW M6X12
11	WHT001190	1	SCREW M5X12
12	410823537	1	DOOR OPENING INTERIOR HANDLE ASSEMBLY
13	N 0211963	1	NUT M5
14			EMERGENCY CABLE (VALID FOR A DIFFERENT MODEL YEAR)
15	418827531	1	FRONT HOOD OPENING CABLE ASSEMBLY
16	410823186	1	REFERENCE
17	410827421	1	ADJUSTER SCREW
18	N 01020717	1	SCREW M5X12
19	410905131	1	HOOD OPENING CABLE HOOKING
20	N 01118312	2	NUT M6
21	WHT002961	2	WASHER
22	N 91051101	2	SCREW M6X30
23	410827501B	1	LOCK
24			CLAMP (VALID FOR A DIFFERENT MODEL YEAR)
25	1Z0860505C	2	SCREW M6X12
26	410823183	1	FRONT HOOD SAFETY HOOD BRACKET ASSELBLY
27			WASHER (VALID UP TO MODEL YEAR 06)

Model : Spare Parts MURCIELAGO SV LP 670-4 Market: USA MY 2010

Group : 823-FRONT HOOD

Table : 823.01.00-FRONT HOOD

Ref.	Code	Q.ty	Description
28	410823723	1	GASKET
29	477971851	2	CLAMP
30	N 0152773	2	WASHER
31	N 0133481	1	SPRING PIN

Model : Spare Parts MURCIELAGO SV LP 670-4 Market: USA MY 2010

Group : 411-FRONT SUSPENSION

Table : 411.01.00-FRONT SUSPENSION

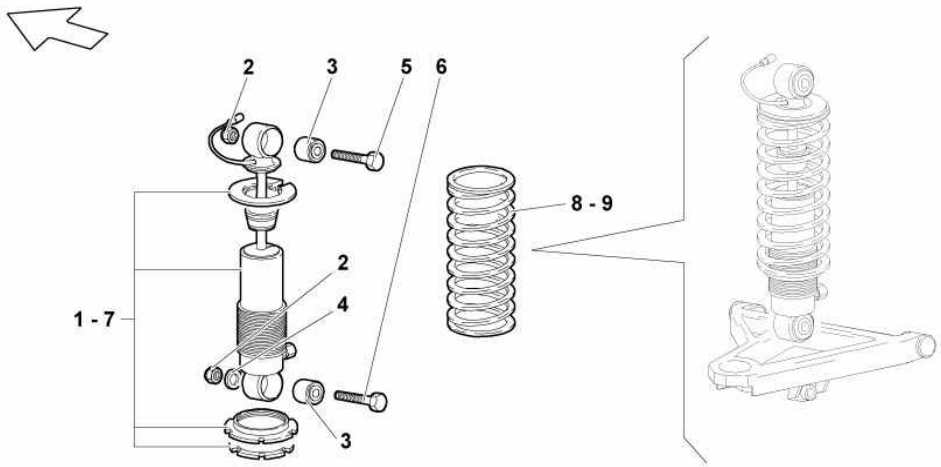

Ref.	Code	Q.ty	Description
1	410412031C	1	SHOCK ABSORBER (LEFT)
2	N 90323706	4	NUT
3			FLEXIBLE BUSHING (CANNOT BE SOLD SEPARATELY)
4	N 90840401	4	WASHER
5	WHT002637	2	SCREW M12X1,25X75
6	N 10592402	2	SCREW
7	410412031C	1	SHOCK ABSORBER (RIGHT-HAND)
8	410411105B	1	SPRING (LEFT)
9	410411105B	1	SPRING (RIGHT-HAND)

Model : Spare Parts MURCIELAGO SV LP 670-4 Market: USA MY 2010

Group : 863-PASSENGER COMPARTMENT TRIMS

Table : 863.05.00-COVERING

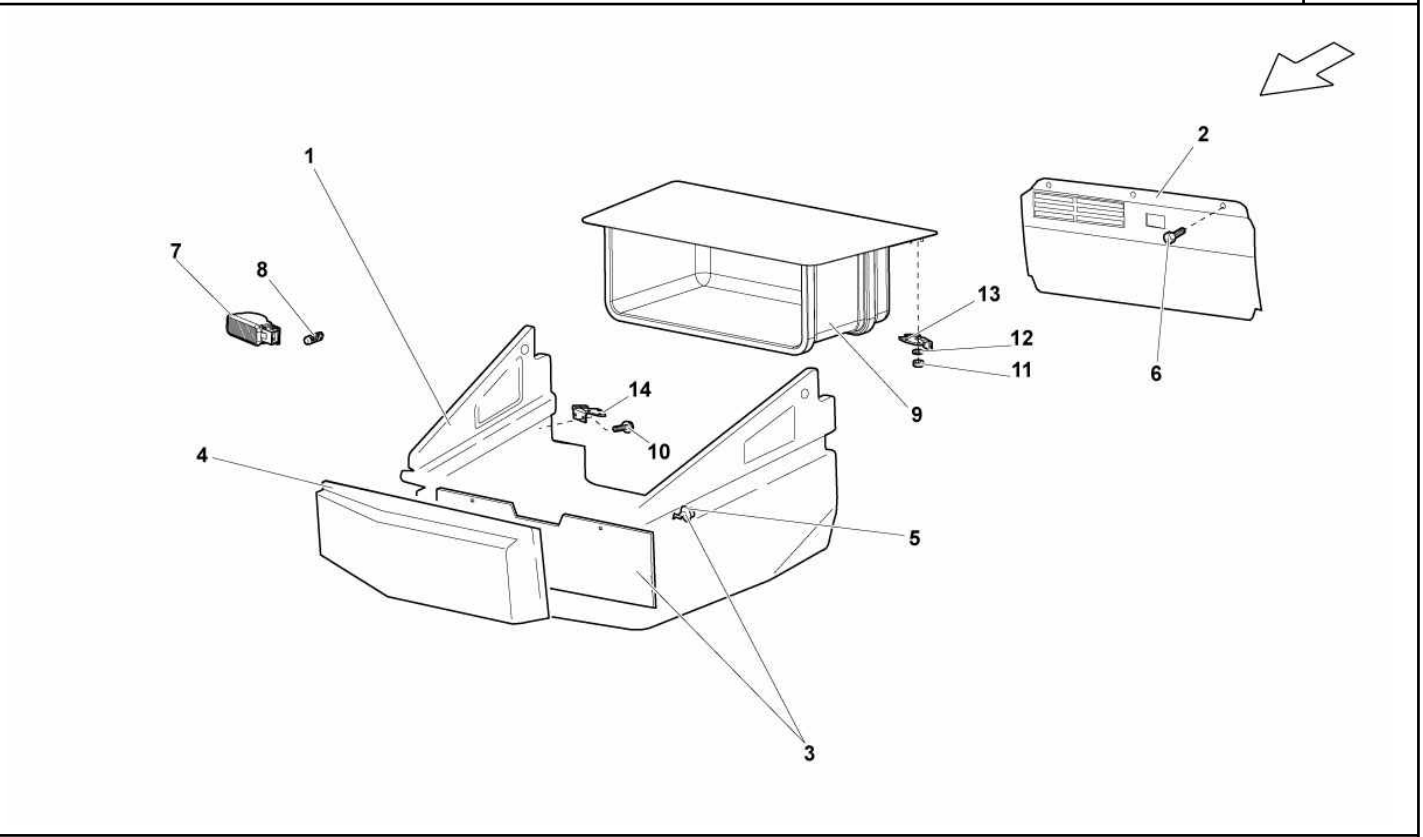

Ref.	Code	Q.ty	Description
1	429863469A	1	CLOSING
2	413863362A	1	PANEL
3	410806547	1	PANEL
4	429863469	1	CLOSING
5	410803305	2	JOURNAL
6	N 90842903	3	SCREW
7	4B0947415A	1	LUGGAGE COMPARTMENT LAMP
8	N 0177532	1	LAMP
9	410823441	1	DRAWER
10	N 90900401	4	SCREW M6X20
11	N 10017307	6	NUT M5
12	WHT001187	6	WASHER
13	410823301	1	LH HINGE
14	410823302	1	RH HINGE

Model : Spare Parts MURCIELAGO SV LP 670-4 Market: USA MY 2010

Group : 601-TYRES

Table : 601.01.00-FRONT TYRES

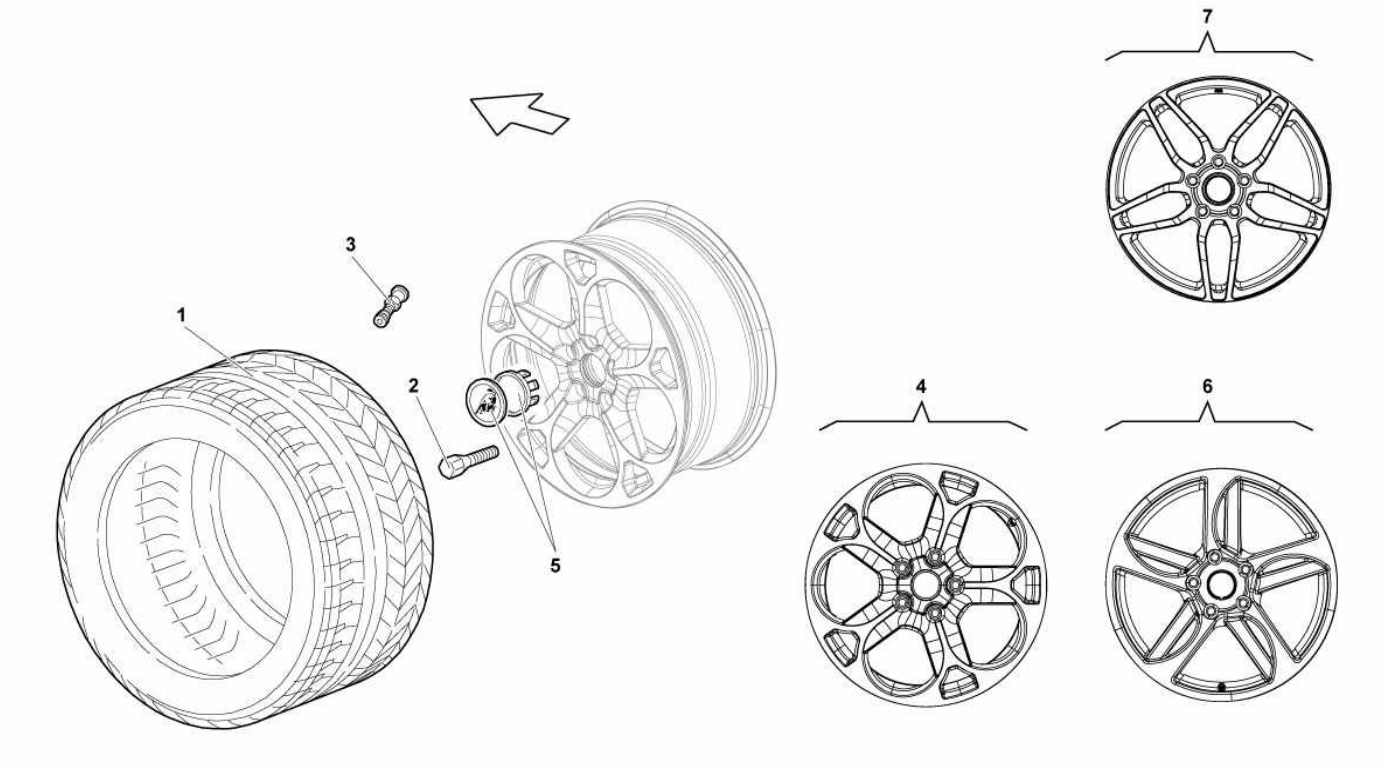

Ref.	Code	Q.ty	Description
1	410601313B	2	SPORT TYRES
2	WHT001161B	10	BLACK STUD
3			VALVE (SEE TABLE 907.01.00)
4			RIM (NOT FOR SUPERVELOCE MODEL)
5	400601147C	2	MOLDING AND HUP-CAP - COLORED
6			RIM (NOT FOR SUPERVELOCE MODEL)
7	410601017AK	2	RIM

Model : Spare Parts MURCIELAGO SV LP 670-4 Market: USA MY 2010

Group : 821-FRONT AND REAR FENDER

Table : 821.03.00-FRONT WHEELHOUSE

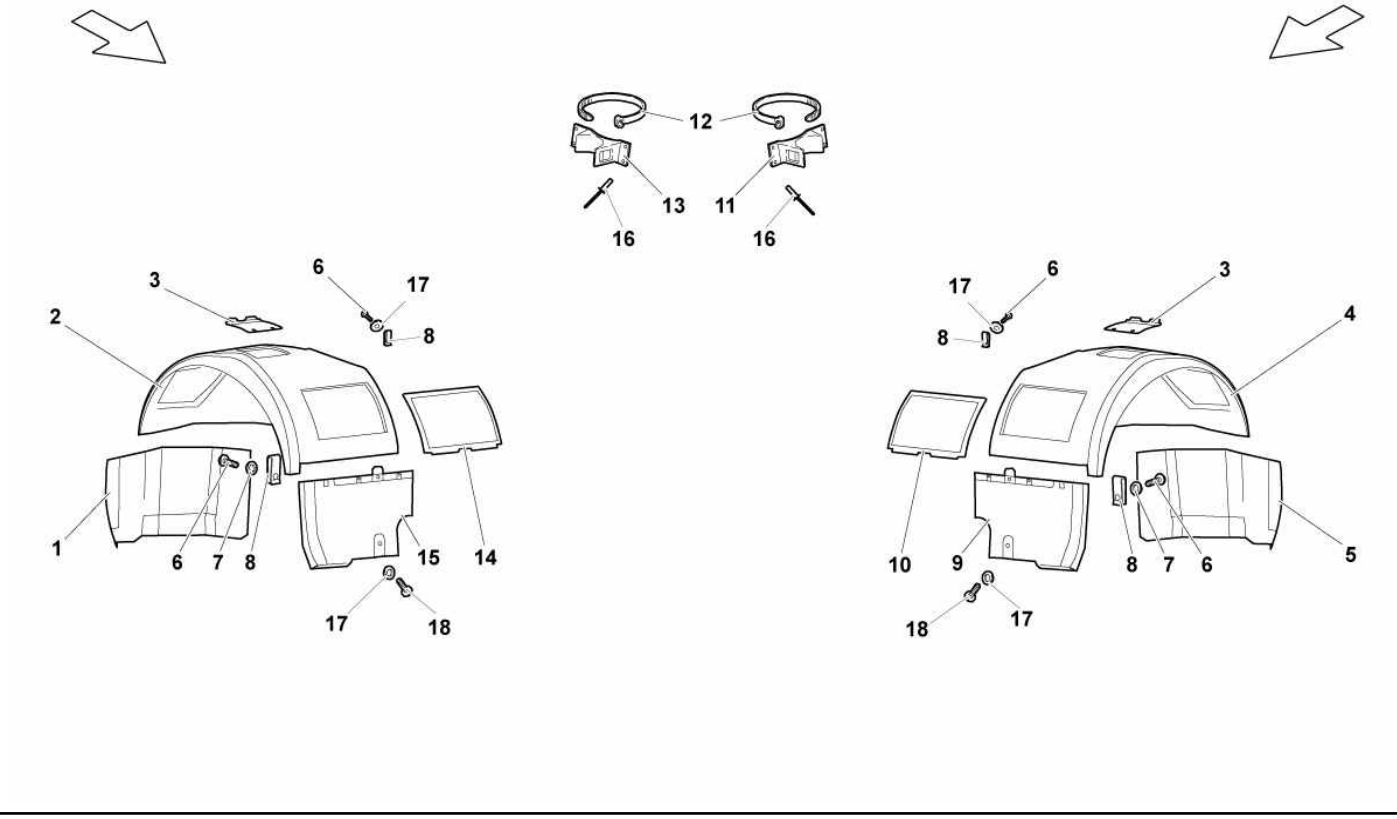

Ref.	Code	Q.ty	Description
1	410821172A	1	RIGHT FRONT WHEEL ARCH, REAR SIDE
2	410821178	1	RIGHT FRONT WHEELARCH, UPPER SIDE
3	410821111	2	FRONT WHEELARCH CHECKING LID
4	410821177	1	LEFT FRONT WHEEL ARCH, UPPER SIDE
5	410821171A	1	LEFT FRONT WHEEL ARCH, REAR SIDE
6	WHT003066	18	SCREW 4.8X13
7	WHT003093	4	WASHER 6.5X24X2
8	N 90834301	18	CLIP
9	410821191	1	LEFT FRONT WHEEL ARCH, FRONT SIDE
10	410821107	1	LEFT FRONT WHEELARCH CHECKING LID
11	410805889	1	LEFT SUPPORT
12	410412177	2	CLAMP
13	410805890	1	RIGHT SUPPORT
14	410821108	1	RIGHT FRONT WHEELARCH CHECKING LID
15	410821192	1	RIGHT FRONT WHEEL ARCH, FRONT SIDE
16	410807250	8	RIVET
17	N 91115501	14	WASHER 6.2X22X1
18	N 90319404	4	SCREW M6X12

Model : Spare Parts MURCIELAGO SV LP 670-4 Market: USA MY 2010

Group : 809-FUEL CAP

Table : 809.01.00-FUEL CAP

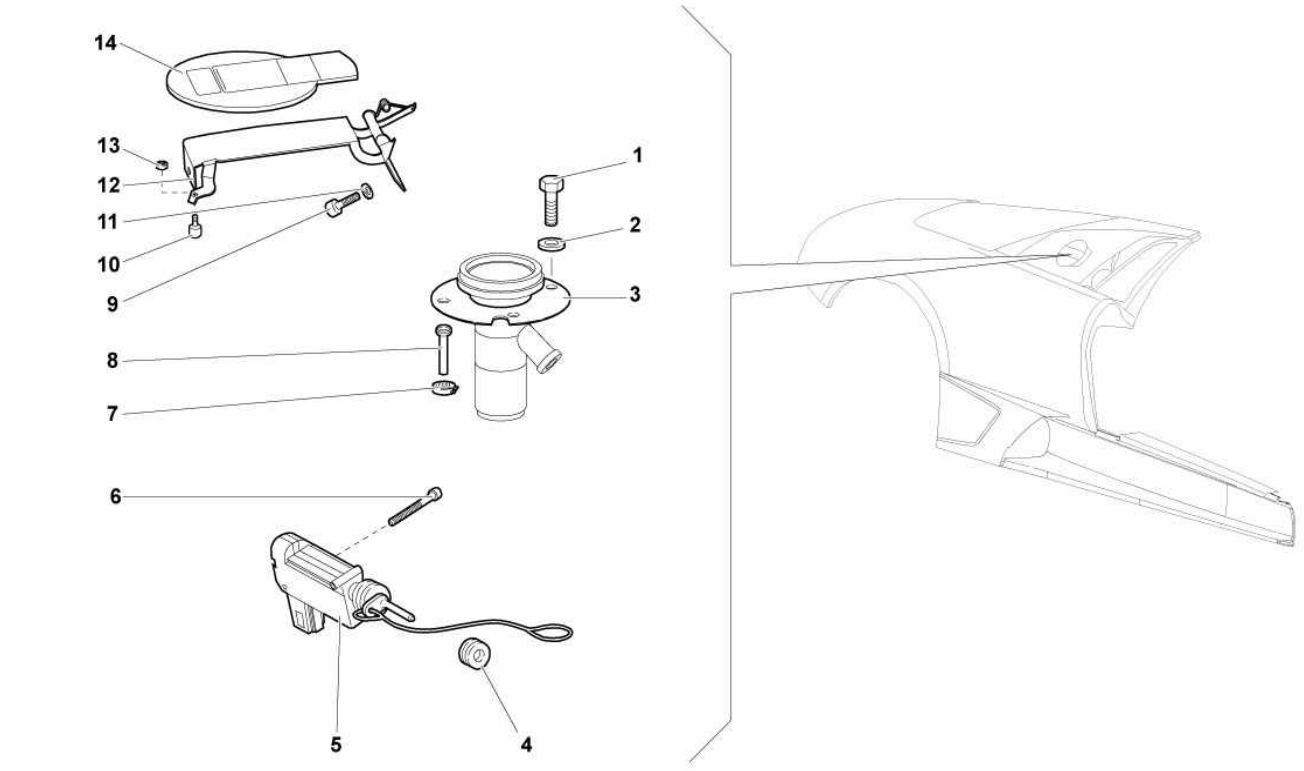

Ref.	Code	Q.ty	Description
1	WHT001190	4	SCREW M5X12
2	WHT003042	4	WASHER
3	410810911	1	GASKET
4	410103638	1	FAIRLEAD 5X8X2
5	410959776	1	ACTUATOR
6	WHT003095	3	SCREW M4X40
7	400251189E	1	CLAMP
8	410810939	1	PIPE
9	WHT000757	2	SCREW M6X16
10	417857363A	2	RUBBER BUMPER
11	WHT003042	2	WASHER
12	418809593A	1	FUEL FILLER LID HINGE ASSEMBLY
13	N 0110027	2	NUT M3
14	418809905	1	COMPLETE FUEL LID

Model : Spare Parts MURCIELAGO SV LP 670-4 Market: USA MY 2010

Group : 201-FUEL SYSTEM

Table : 201.03.00-FUEL SYSTEM

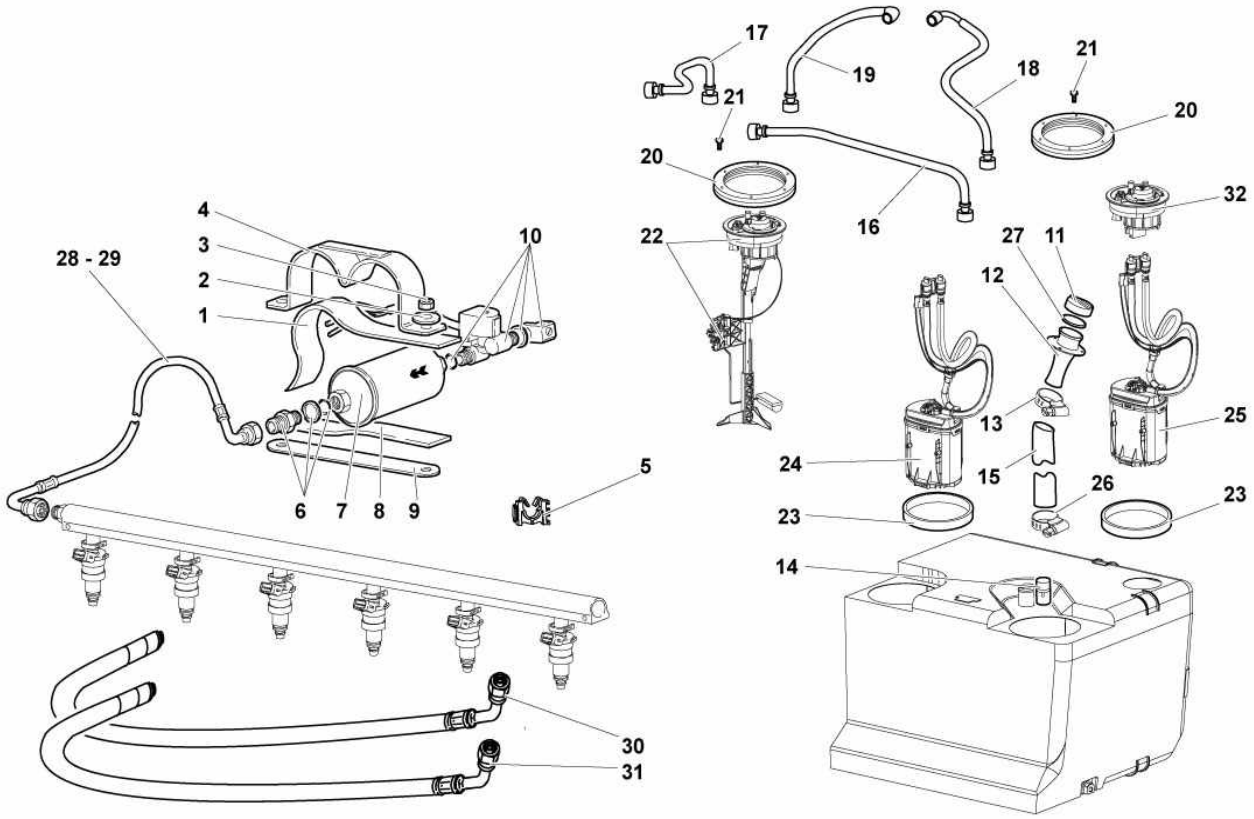

Ref.	Code	Q.ty	Description
1	410201349	1	GASKET
2	N 01152427	2	WASHER
3	N 01118312	2	NUT M6
4	410201449A	1	CLAMP
5	400611799A	6	CLAMP
6	400201149B	2	CONNECTOR
7	400201511A	2	FUEL FILTER
8	410201196	1	GASKET
9	410201450A	1	PLATE
10	410937305	2	SOLENOID VALVE
11	400201587A	1	FUEL FILLER PLUG
12	410201135B	1	UPPER FUEL FILLER ASSEMBLY
13	N 91115301	1	CLAMP
14	400201345	1	VALVE
15	417201131	1	PIPE
16	410201364A	1	PIPE 7-12 (RETURN HOSE)
17	410201364C	1	PIPE 1-6 (RETURN HOSE)
18	410201215A	1	PIPE 7-12 (FEED PIPE)
19	410201214A	1	PIPE 1-6 (FEED PIPE)
20	400201099	2	FLANGE
21	WHT001194	12	SCREW
22	410919046	1	INDICATOR
23	1J0919133	2	GASKET
24	410919051C	1	PUMP
25	410919051C	1	PUMP
26	N 0245077	1	CLAMP
27	400201557	1	GASKET
28	410201217A	1	PIPE 7-12 (FEED PIPE)

Model : Spare Parts MURCIELAGO SV LP 670-4 Market: USA MY 2010

Group : 201-FUEL SYSTEM

Table : 201.03.00-FUEL SYSTEM

Ref.	Code	Q.ty	Description
29	410201218A	1	PIPE 1-6 (FEED PIPE)
30	410201216B	1	PIPE 1-6 (RETURN HOSE)
31	410201219A	1	PIPE 7-12 (RETURN HOSE)
32	410919679	1	FLANGE

Model : Spare Parts MURCIELAGO SV LP 670-4 Market: USA MY 2010

Group : 201-FUEL SYSTEM

Table : 201.02.00-FUEL SYSTEM

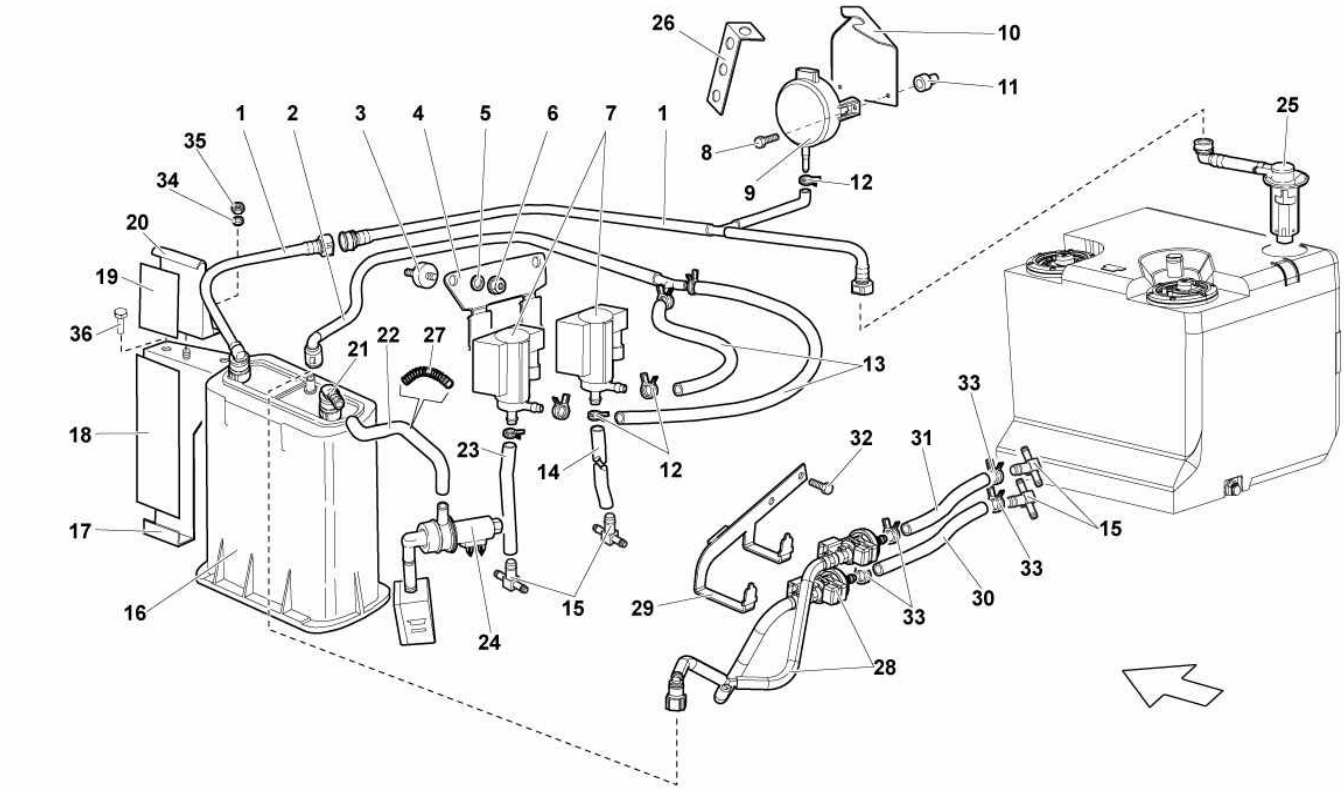

Ref.	Code	Q.ty	Description
1	410201163	1	PIPE
2			Y-CONNECTOR/CANISTER PIPE ASSEMBLY (VALID UP TO MODEL YEAR 07)
3			FLEXIBLE SUPPORT (VALID UP TO MODEL YEAR 07)
4			SUPPORT (VALID UP TO MODEL YEAR 07)
5			WASHER (VALID UP TO MODEL YEAR 07)
6			NUT (VALID UP TO MODEL YEAR 07)
7			SOLENOID VALVE (VALID UP TO MODEL YEAR 07)
8	WHT001389	2	SCREW M3X0,5X16
9	400906206C	1	EVAPORATIVE EMISSION CONTROL PRESSURE SENSOR
10	418906217	1	SUPPORT
11	400906310	2	PUFFER
12			CLAMP (VALID UP TO MODEL YEAR 07)
13			PIPE (VALID UP TO MODEL YEAR 07)
14			PIPE 7-12 (VALID UP TO MODEL YEAR 07)
15	410133381B	2	CONNECTOR
16	400133563	1	VAPOR FILTER
17	410201898A	1	SUPPORT
18	410201119	1	GASKET
19	410201309	1	GASKET
20	410201827A	1	SUPPORT
21	410133022A	1	CONNECTOR
22	410133739	1	PIPE
23			PIPE 1-6 (VALID UP TO MODEL YEAR 07)
24	400906311	1	CANISTER FILTER VALVE + WIRING HARNESS ASSEMBLY
25	410201521	1	FLOATING VALVE
26	410971789A	1	BRACKET
27	410133524	1	SPRING

Model : Spare Parts MURCIELAGO SV LP 670-4 Market: USA MY 2010

Group : 201-FUEL SYSTEM

Table : 201.02.00-FUEL SYSTEM

Ref.	Code	Q.ty	Description
28	410133366A	1	Y-CONNECTOR/CANISTER PIPE ASSEMBLY (UP TO VIN 7LA____ USE 410906285C)
29	410906285C	1	SUPPORT
30	410133595B	1	PIPE 7-12
31	410133606C	1	PIPE 1-6
32	N 90833102	2	SCREW M6X10
33	N 90686701	4	CLAMP
34	N 01152427	3	WASHER
35	N 01118312	1	NUT
36	N 10546402	2	SCREW M6X16

Model : Spare Parts MURCIELAGO SV LP 670-4 Market: USA MY 2010

Group : 201-FUEL SYSTEM

Table : 201.01.00-TANK - IMPLANTATIONS

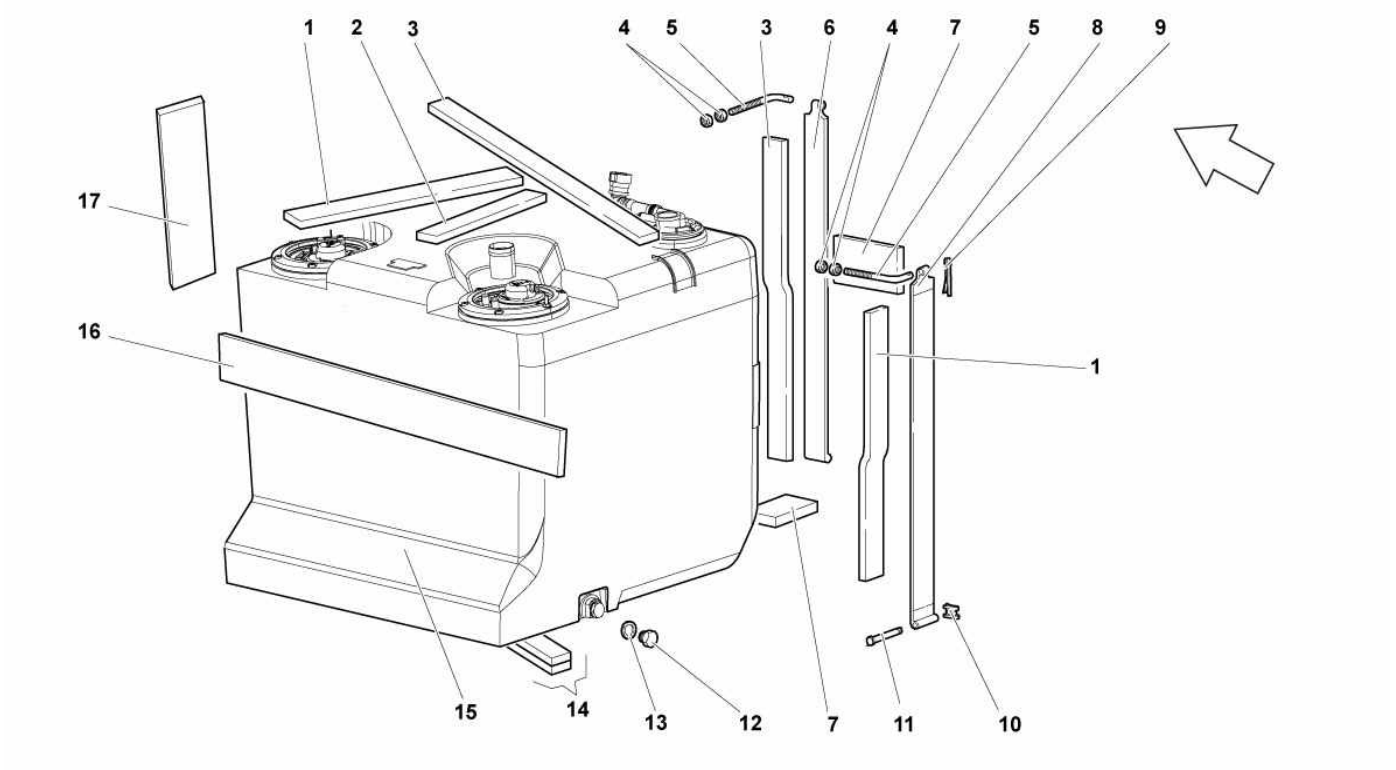

Ref.	Code	Q.ty	Description
1	410201299	1	GASKET
2	410201643	1	PROTECTION
3	410201644	1	PROTECTION
4	N 01100845	4	NUT M8X1,25X8
5	410201652A	1	TIE ROD
6	410201639A	1	CLAMP
7	410201783	1	GASKET
8	410201639A	1	SPLIT PIN
9	N 0125291	2	CLIP
10	N 0126453	2	JOURNAL
11	410201750	2	PLUG
12	410201254	1	PLUG
13	WHT003362	1	GASKET
14	410201644	2	PROTECTION
15	410201075H	1	FUEL TANK (COMPLETE)
16	400201365C	1	PROTECTION
17	400201365C	1	PROTECTION

Model : Spare Parts MURCIELAGO SV LP 670-4 Market: USA MY 2010

Group : 198-GASKET KIT

Table : 198.01.00-GASKET KIT

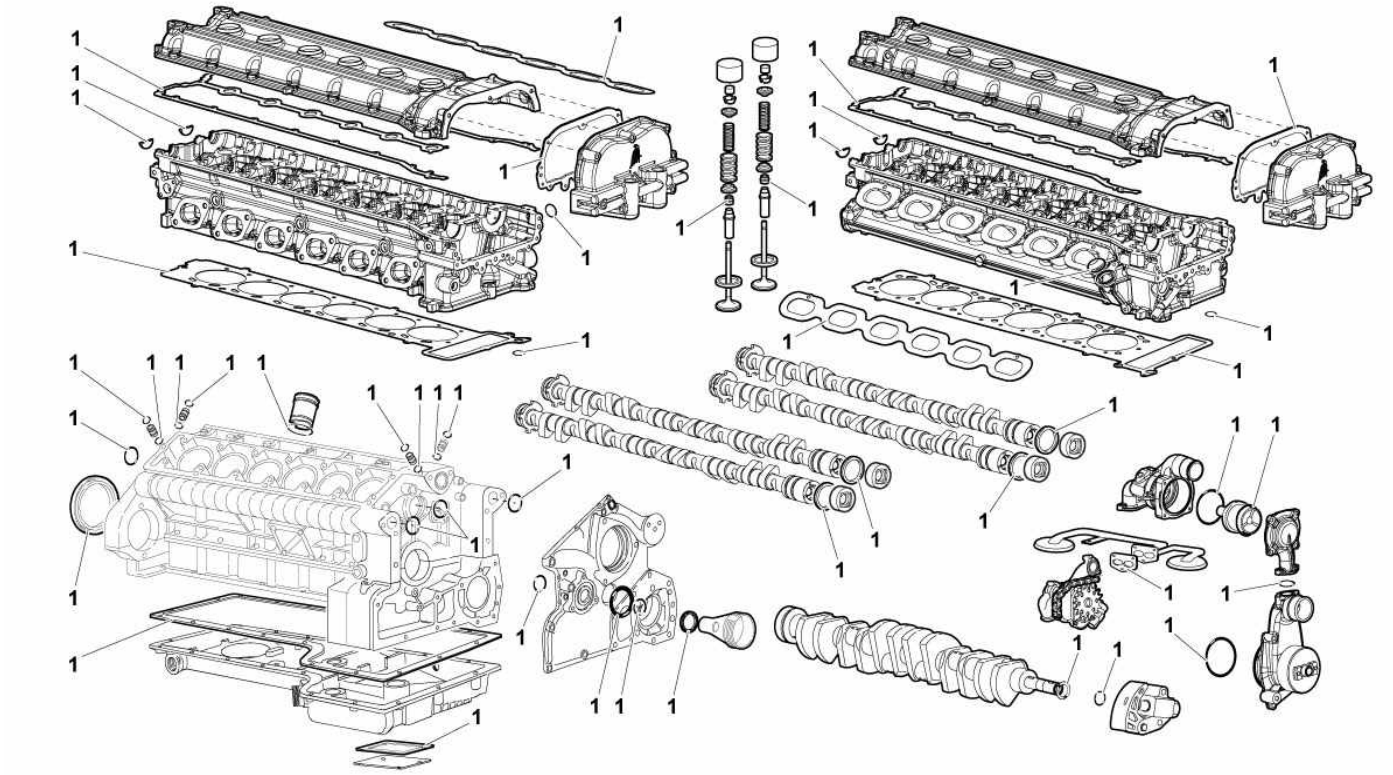

Ref.	Code	Q.ty	Description
1	0R1470106	1	GASKETS SET

Model : Spare Parts MURCIELAGO SV LP 670-4 Market: USA MY 2010

Group : 315-GEARBOX OIL PUMP

Table : 315.01.00-GEARBOX OIL PUMP

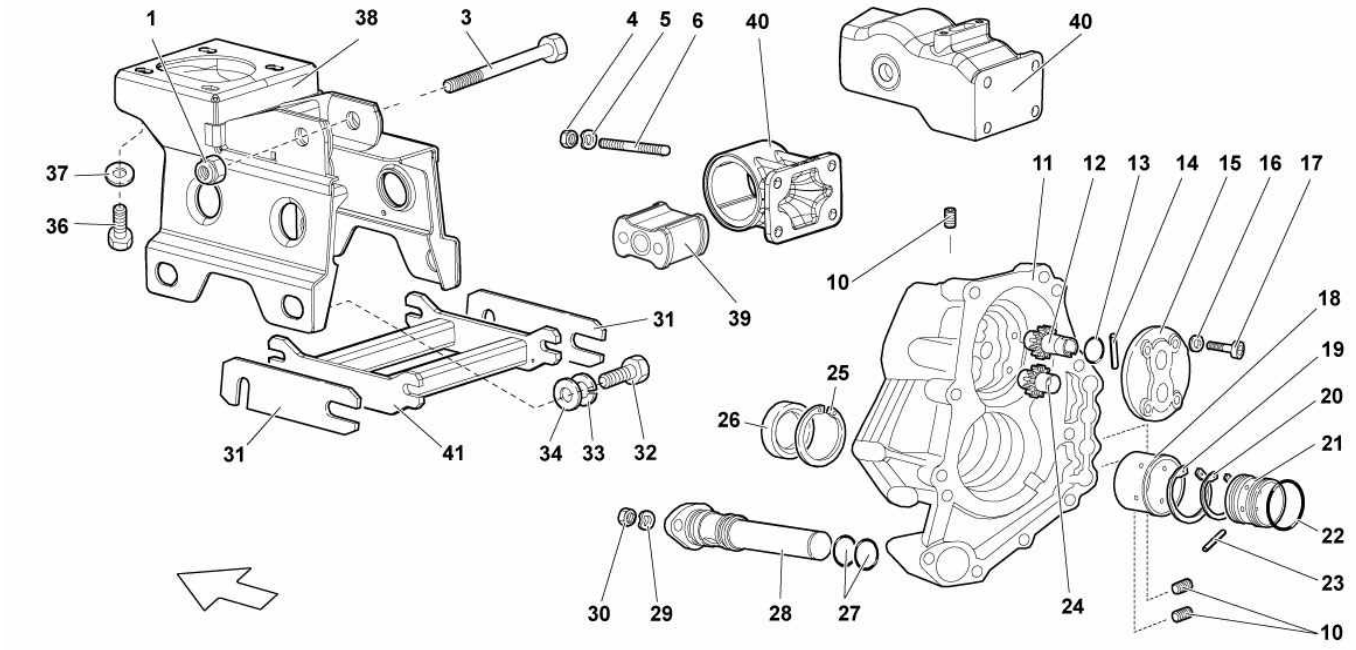

Ref.	Code	Q.ty	Description
1	N 10268603	1	NUT
3	N 10306403	1	SCREW
4	N 01100845	4	NUT
5	410422395	4	WASHER
6	WHT002945	4	STUD BOLT
10	086301729	3	PLUG
11	086301271	1	FRONT GEARBOX BODY
12	086315021	1	GEAR
13	WHT003523	1	SEAL RING
14	WHT003690	1	PIN
15	086315141	1	COVER
16	WHT001197A	4	WASHER
17	N 10546402	4	SCREW
18	086301155	1	BUSHING
19	WHT003581	1	SEAL RING
20	N 0122902	1	SEAL RING
21	086315167	1	BUSHING
22	086323135	4	PISTON RING
23	WHT003583	1	JOURNAL
24	086315127	1	GEAR
25	N 0122902	1	RETAINING RING
26	086311321	1	SEAL RING
27	WHT003524	2	SEAL RING
28	086301516A	1	OIL FILTER
29	WHT000771	2	WASHER
30	N 90226404	2	NUT
31	410711288A	6	ADJUSTMENT SHIM
32	N 10518402	4	SCREW

Model : Spare Parts MURCIELAGO SV LP 670-4 Market: USA MY 2010

Group : 315-GEARBOX OIL PUMP

Table : 315.01.00-GEARBOX OIL PUMP

Ref.	Code	Q.ty	Description
33	N 0152785	4	WASHER
34	N 90179103	4	WASHER 18X8,4X2,5
36	WHT002951	4	SCREW
37	N 90840802	4	WASHER
38	410713292A	1	SUPPORT
39	410399663B	1	SILENTBLOC
40	086399213B	1	SUPPORT (E-GEAR)
40	086399213	1	SUPPORT (MANUAL GEARBOX)
41	410399115A	1	GEARBOX BRACKET

Model : Spare Parts MURCIELAGO SV LP 670-4 Market: USA MY 2010

Group : 301-SHAFT

Table : 301.02.00-GEARBOX

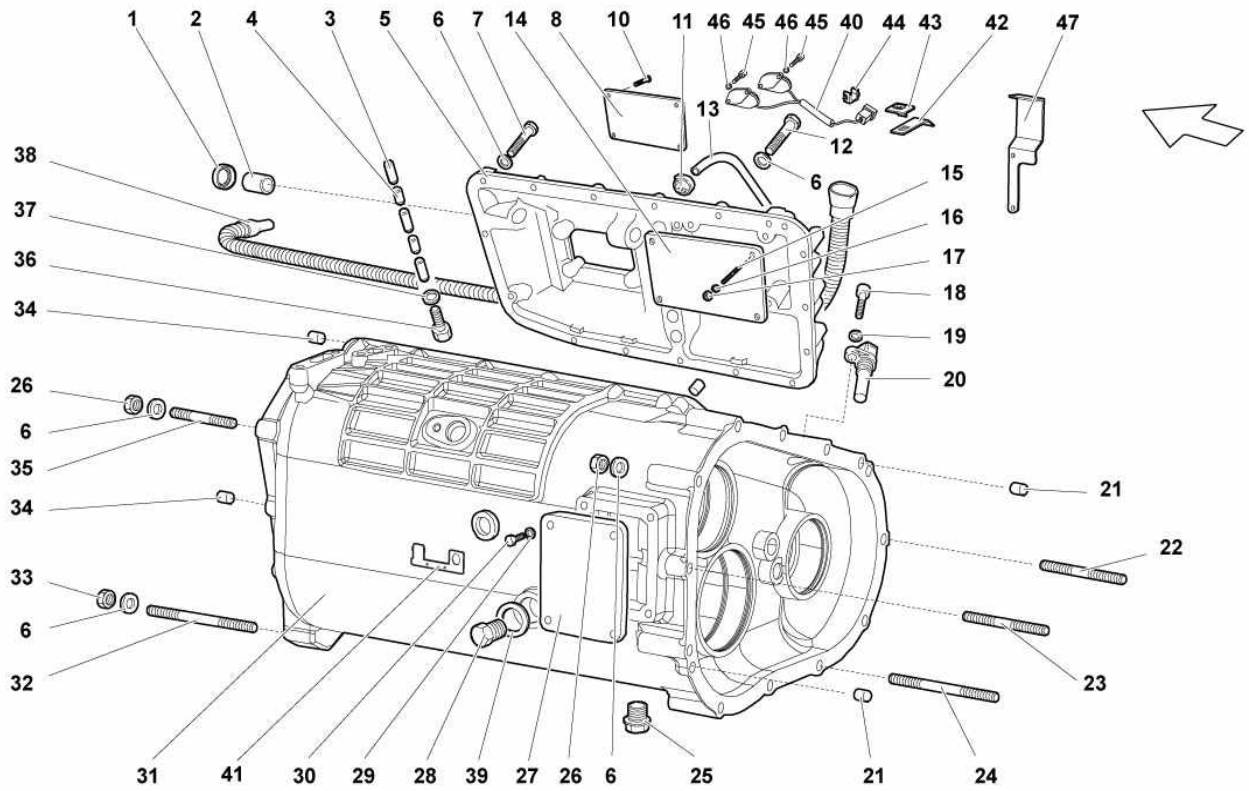

Ref.	Code	Q.ty	Description
1	086311520	1	SEAL RING
2	086311621	1	BUSHING
3	086311281A	3	PAWL
4	086311281B	2	PAWL
5	086301201C	1	COVER (E-GEAR)
5	086301201B	1	COVER (MANUAL GEARBOX)
6	WHT000771	18	WASHER
7	N 10582103	6	SCREW M6X40
8	086301465A	1	COVER (E-GEAR)
8	086301465	1	COVER (MANUAL GEARBOX)
10	N 10653201	4	SCREW M6X16
11	400127217	1	CLAMP
12	N 10700202	12	SCREW M6X22
13	086301472	1	BREATHER PIPE
14	086301827	1	COVER
15	WHT002943	4	STUD BOLT
16	WHT001197A	4	WASHER
17	WHT002953	4	NUT M6
18	N 91084801	2	SCREW M6X18
19	WHT001197A	2	WASHER
20	086927321	2	TIMING SENSOR
21	WHT003078	2	DOWEL
22	WHT003166	1	STUD BOLT
23	WHT002944	1	STUD BOLT
24	WHT002946	10	STUD BOLT
25	086301141	1	MAGNETIC PLUG
26	N 01100845	8	NUT
27	086301173	1	COVER

Model : Spare Parts MURCIELAGO SV LP 670-4 Market: USA MY 2010

Group : 301-SHAFT

Table : 301.02.00-GEARBOX

Ref.	Code	Q.ty	Description
28	086301141	1	MAGNETIC PLUG
29	WHT001197A	4	WASHER
30	N 01021626	4	SCREW M6X18
31	086301103F	1	6-GEAR MANUAL TRANSMISSION CASE
32	WHT002944	1	STUD BOLT
33	N 90226404	1	NUT M8
34	WHT003078	2	DOWEL
35	WHT003167	8	STUD BOLT
36	N 01029315	1	SCREW M8X16
37	N 0138302	1	WASHER
38	410971771G	1	WIRING HARNESS (MANUAL GEARBOX)
39	N 0138271	1	GASKET
40	086927321A	1	E-GEAR SENSOR
41	400326138A	1	SUPPORT
42	400971890D	1	BRACKET
43	1J0937510A	1	SUPPORT
44	410868630A	2	BRACKET
45	N 10662102	4	SCREW M4X12
46	N 0115557	4	WASHER
47	086301327A	1	PROTECTION (E-GEAR)

Model : Spare Parts MURCIELAGO SV LP 670-4 Market: USA MY 2010

Group : 609-HAND BRAKE

Table : 609.01.00-HAND BRAKE

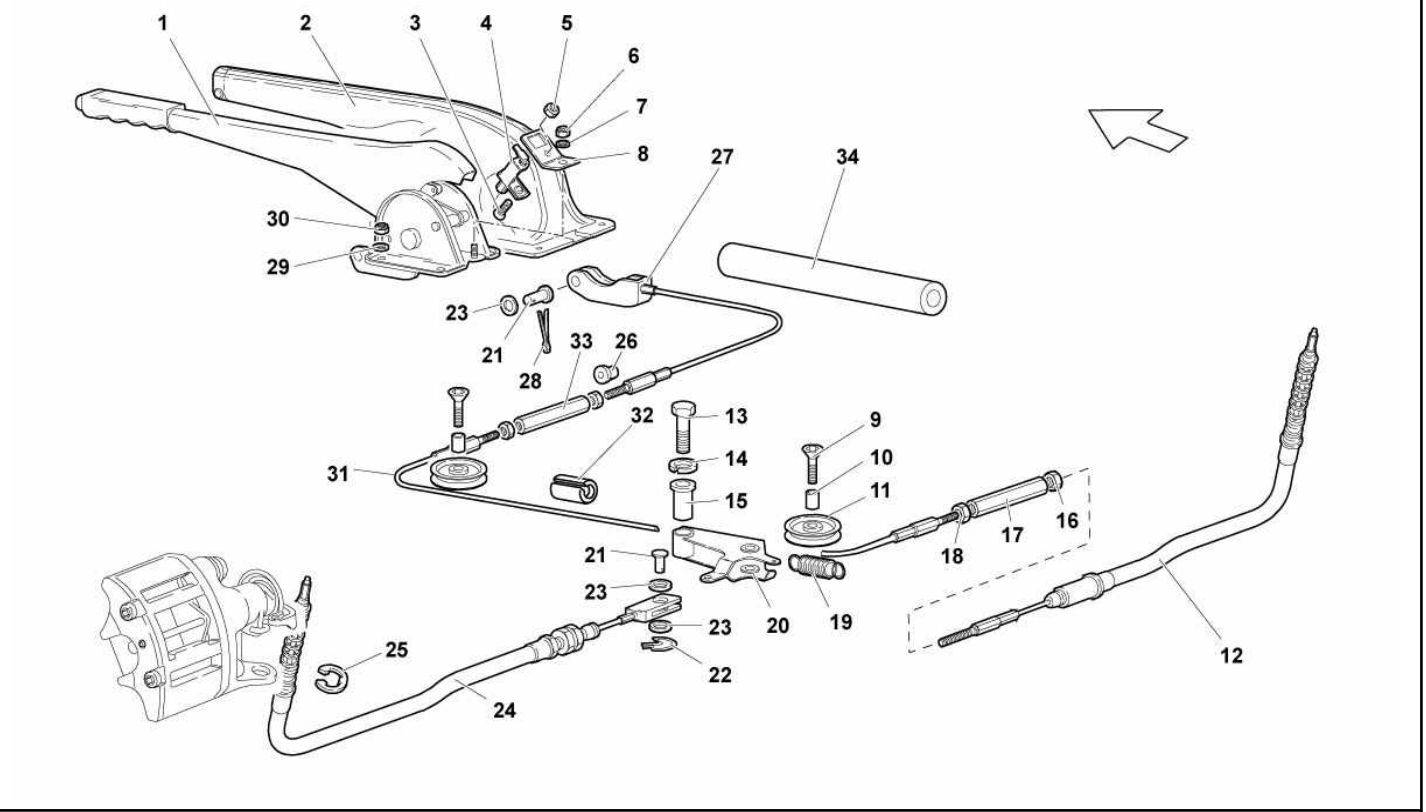

Ref.	Code	Q.ty	Description
1	410711305A	1	HAND BRAKE LEVER (CARBON INTERIOR – SUPPLY VIN)
2	418711115B	1	COVERING (ALCANTARA UPHOLSTERY - SUPPLY VIN)
3	WHT002956	1	SCREW 4X10
4	410711323	1	BUTTON
5	WHT002959	1	NUT M4
6	N 0211963	1	NUT M5
7	WHT001187	1	WASHER
8	410711403A	1	SUPPORT
9	N 10561802	3	SCREW M8X35
10	410711342A	3	BUSHING
11	410711340	3	PULLEY
12	410609701A	1	TIE ROD
13	N 10723901	1	SCREW M14X55
14	WHT002633	1	WASHER
15	410609815	1	SPACER
16	N 01100638	1	NUT M6
17	410609206	1	ADJUSTING SLEEVE
18	N 01100632	1	NUT M6
19	410609707A	1	SPRING
20	410711347A	1	SUPPORT
21	410609789A	1	JOURNAL
22	410713299	1	CLIP
23	N 0122094	3	WASHER
24	410609702A	1	TIE ROD
25	WHT003586	2	RETAINING RING
26	410609155	1	RUBBER BUSHING
27	413609722A	1	TIE ROD
28	N 0125152	1	SPLIT PIN

Model : Spare Parts MURCIELAGO SV LP 670-4 Market: USA MY 2010

Group : 609-HAND BRAKE

Table : 609.01.00-HAND BRAKE

Ref.	Code	Q.ty	Description
29	N 01152427	4	WASHER
30	N 01118312	4	NUT M6
31			TIE ROD (FOR GDX VERSIONS)
32	410609774	1	BUSHING
33			ADJUSTING SLEEVE (FOR GDX VERSIONS)
34	010600150	1	PROTECTION (ORDER BY THE METRE)

Model : Spare Parts MURCIELAGO SV LP 670-4 Market: USA MY 2010

Group : 035-HI-FI SYSTEM

Table : 035.01.00-HI-FI SYSTEM

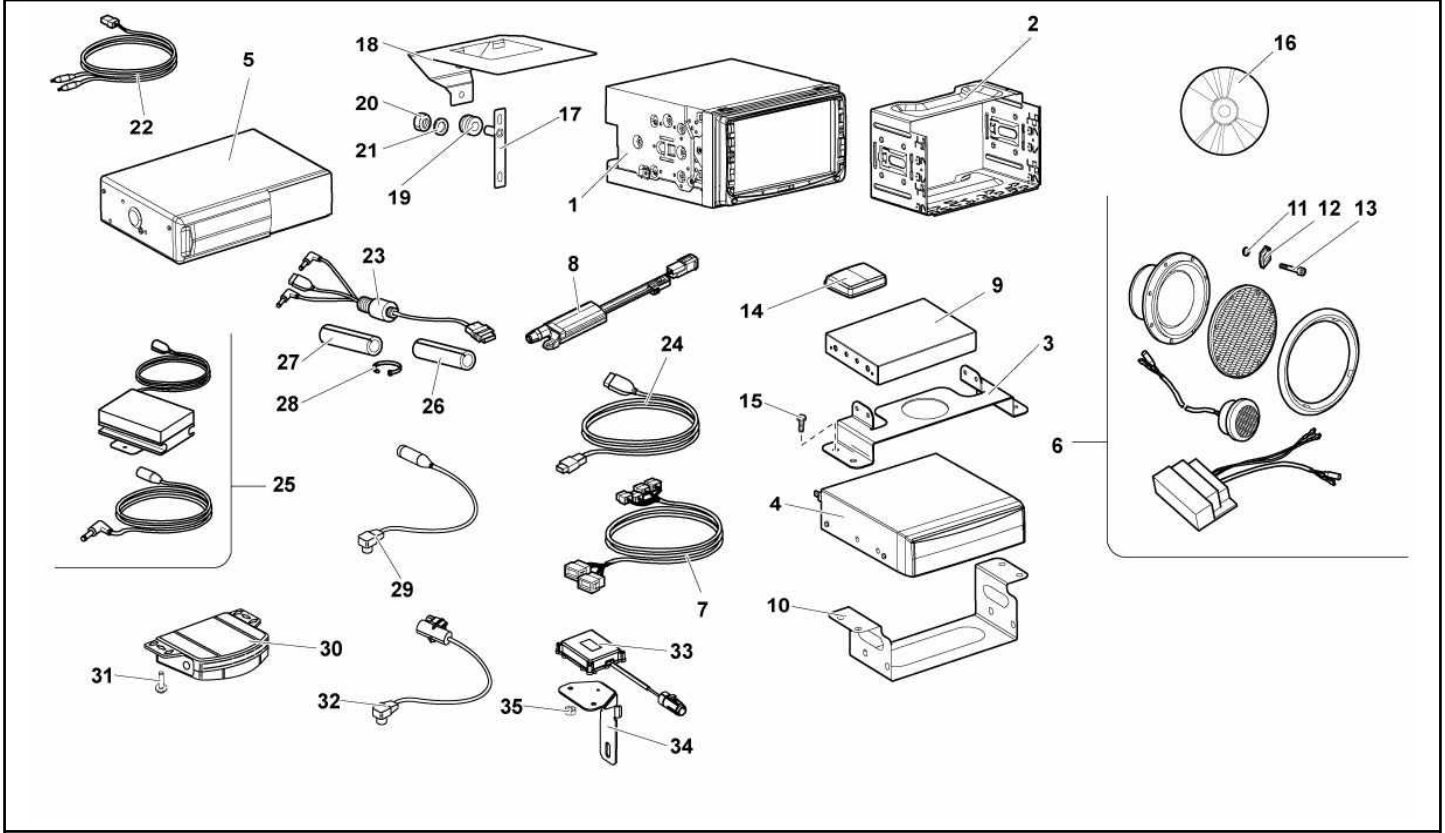

Ref.	Code	Q.ty	Description
1	410035053R	1	RADIO (KENWOOD DDX814)
1	410035053S	1	RADIO AND NAVIGATOR SYSTEM (KENWOOD DNX9140 - BLUETOOTH)
2	410035905A	1	SUPPORT
3			BRACKET (VALID FOR A MODEL YEAR 07)
4			DVD CHANGER (VALID FOR A MODEL YEAR 07)
5			CD CHANGER (VALID UP TO MODEL YEAR 08)
6	410035361A	1	LOUDSPEAKER KIT
7	410971411D	1	CABLE (KENWOOD INTERFACE)
8	410035225	1	ANTENNA AMPLIFIER (ZENDAR)
9			TMC CONTROL UNIT (VALID UP TO MODEL YEAR 08)
10			BRACKET (VALID UP TO MODEL YEAR 07)
11	410971952	8	SHIM
12	N 0154487	8	CLIP
13	N 0139821	8	SCREW ST3.9X25
14			TMC CONTROL UNIT (VALID FOR A MARKET JAPANESE)
15			SCREW (VALID UP TO MODEL YEAR 07)
16			DVD-ROM (VALID UP TO MODEL YEAR 07)
17	410035316A	1	BRACKET
18			BRACKET (VALID UP TO MODEL YEAR 07)
19	07L121585	1	FAIRLEAD
20			NUT M6 (VALID UP TO MODEL YEAR 07)
21			WASHER (VALID UP TO MODEL YEAR 07)
22			CABLE (VALID UP TO MODEL YEAR 07)
23	410035769	1	CABLE (I-POD)
24	410035769A	1	CABLE (USB)
25			BLUETOOTH KIT (VALID UP TO MODEL YEAR 08)
26	191971790J	2	PROTECTION
27	191971790A	1	PROTECTION

Model : Spare Parts MURCIELAGO SV LP 670-4 Market: USA MY 2010

Group : 035-HI-FI SYSTEM

Table : 035.01.00-HI-FI SYSTEM

Ref.	Code	Q.ty	Description
28	N 90937701	6	CLAMP
29	410035320	1	CABLE (KENWOOD/SIRIUS)
30	410035593	1	SIRIUS SAT RADIO TUNER (SUPPLY VIN)
31	N 10621601	2	SCREW M4X12
32	410035558	1	CABLE (SDARS)
33	420035503B	1	ANTENNA (SDARS)
34	410035527	1	BRACKET (SDARS)
35	N 10017304	2	NUT M5

Model : Spare Parts MURCIELAGO SV LP 670-4 Market: USA MY 2010

Group : 864-INSULATIONS AND SOUNDPROOFING

Table : 864.03.00-INSULATIONS AND SOUNDPROOFING

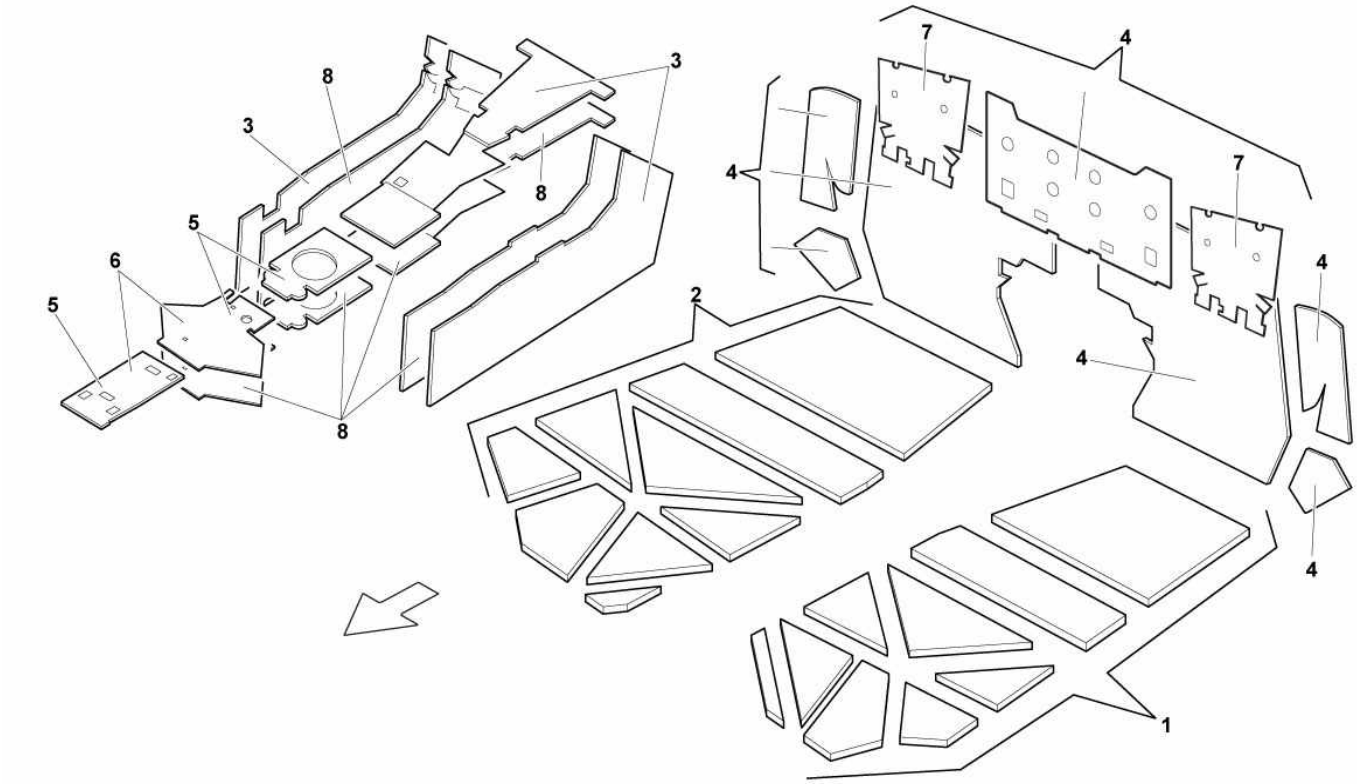

Ref.	Code	Q.ty	Description
1	310147045	1	PASS. COMP. FLOOR INSUL. - LH
2	310147046	1	PASS. COMP. FLOOR INSUL. - RH
3	310147063	1	TUNNEL INSULATION INSIDE PASSENGER COMPARTMENT (E-GEAR)
3	310147072	1	TUNNEL INSULATION INSIDE PASSENGER COMPARTMENT (MANUAL GEARBOX)
4	310147043	1	REAR PASSENGER COMPARTMENT INSULATION
5	310147071	1	SHIFT LEVER AREA INSULATION (MANUAL GEARBOX)
6	310147044	1	SHIFT LEVER AREA INSULATION (E-GEAR)
7			ROLL BAR BAR INSULATION (VALID FOR A DIFFERENT MODEL)
8	310147522	1	TUNNEL INSULATION INSIDE PASSENGER COMPARTMENT (MANUAL GEARBOX)

Model : Spare Parts MURCIELAGO SV LP 670-4 Market: USA MY 2010

Group : 864-INSULATIONS AND SOUNDPROOFING

Table : 864.02.00-INSULATIONS AND SOUNDPROOFING

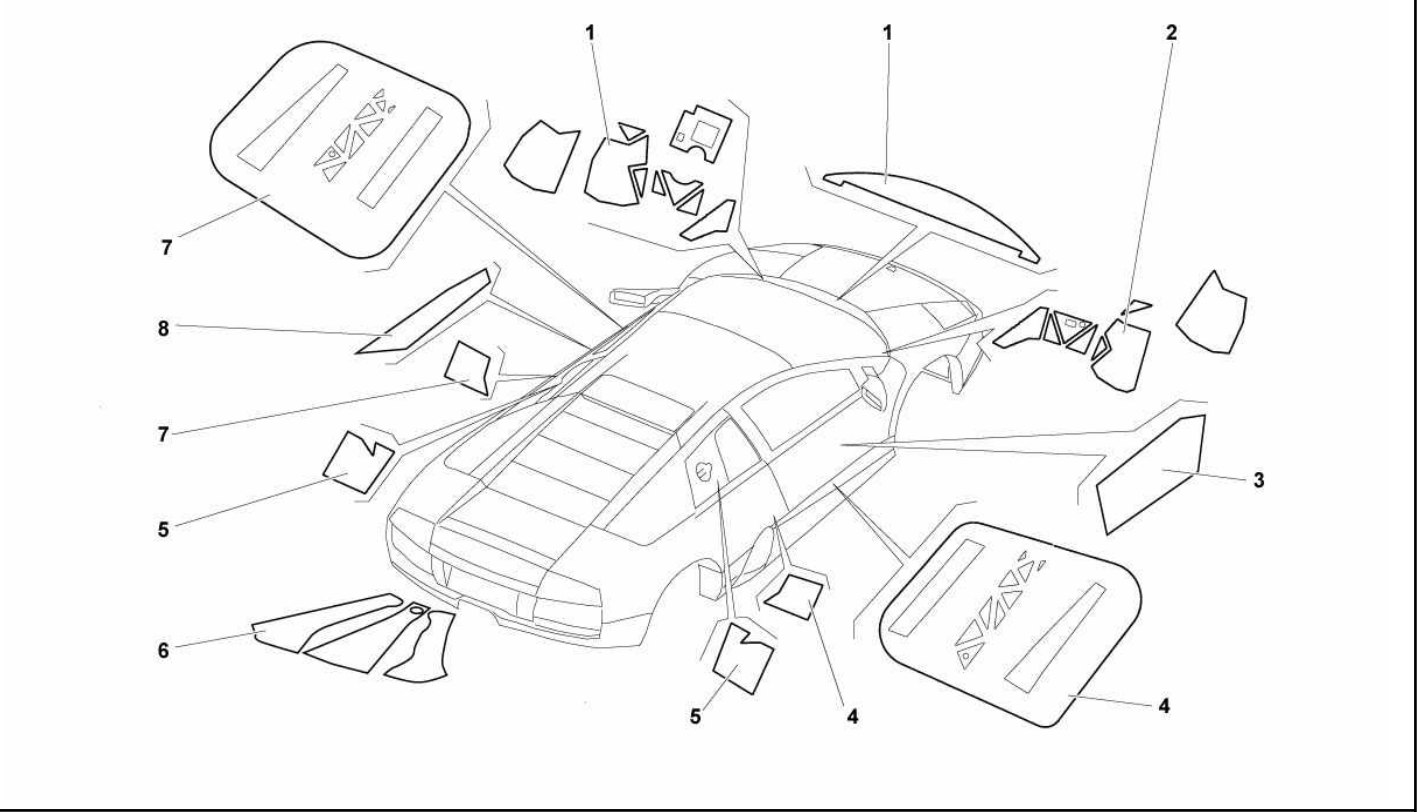

Ref.	Code	Q.ty	Description
1	310147075	1	LEFT FRONT FIREPROOF (E-GEAR)
1	310147077	1	LEFT FRONT FIREPROOF (MANUAL GEARBOX)
2	310147061	1	RIGHT FRONT FIREPROOF (E-GEAR)
2	310147070	1	RIGHT FRONT FIREPROOF (MANUAL GEARBOX)
3	410837830	1	RIGHT DOOR INSULATION
4	310147053	1	SIDE MEMBER INSULATION, RIGHT SIDE
5	310147025	1	BUTTERFLY WINDOWS HOUSING INSULATION
6	310147040	1	TUNNEL LOWER INSULATION SET (E-GEAR)
6	310147031	1	TUNNEL LOWER INSULATION SET (MANUAL GEARBOX)
7	310147052	1	SIDE MEMBER INSULATION, LEFT SIDE
8	410837829	1	LEFT DOOR INSULATION

Model : Spare Parts MURCIELAGO SV LP 670-4 Market: USA MY 2010

Group : 864-INSULATIONS AND SOUNDPROOFING

Table : 864.01.00-INSULATIONS AND SOUNDPROOFING

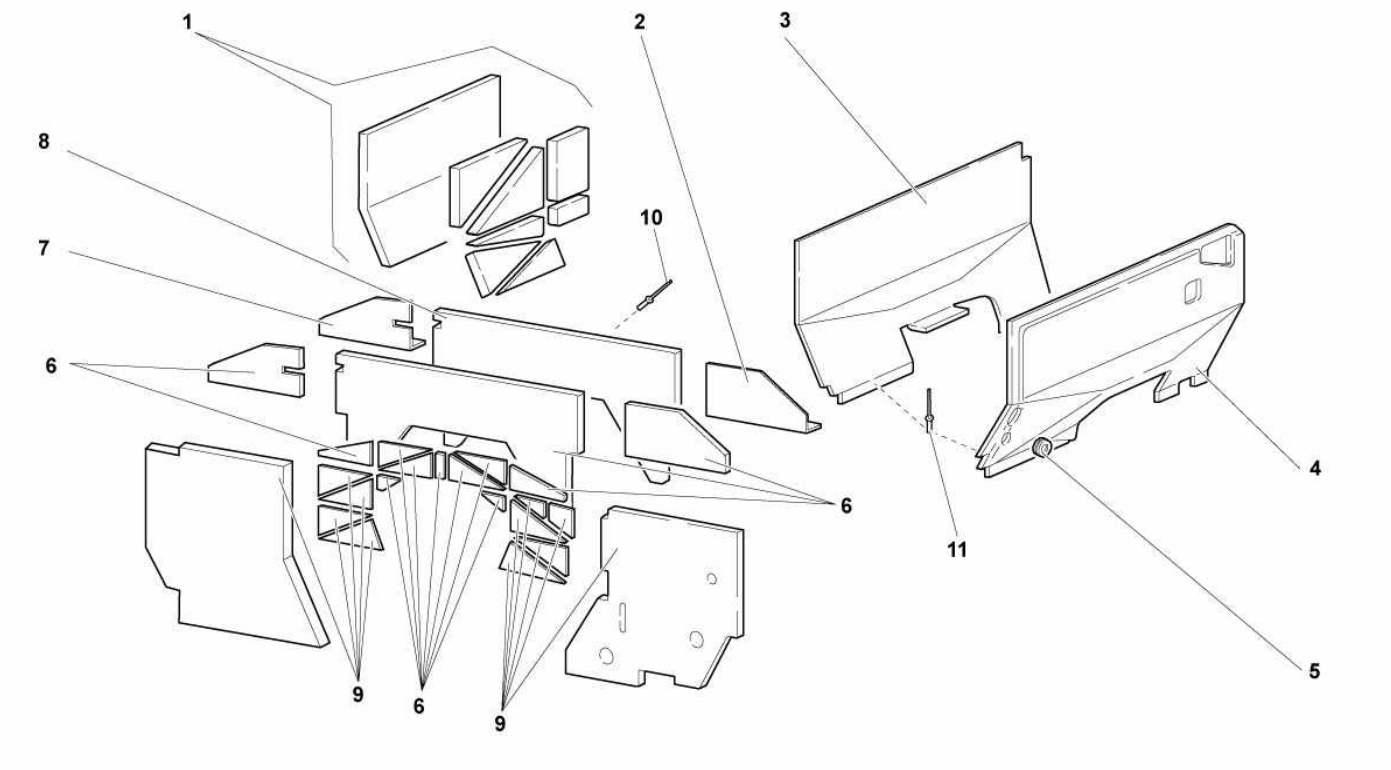

Ref.	Code	Q.ty	Description
1	310147021	1	FUEL TANK ISOLATION SET
2	418103763	1	ENGINE COMPARTMENT LEFT FIREPROOF SHIELD
3	418863932B	1	RIGHT HEAT SHIELD
4	418863931B	1	LEFT HEAT SHIELD
5	400825837	1	RUBBER RING
6	310147022	1	ENGINE SIDE FIREPROOF SET
7	418103764A	1	ENGINE COMPARTMENT RIGHT FIREPROOF SHIELD
8	418864926A	1	ENGINE COMPARTMENT CENTER FIREPROOF SHIELD
9	310147049	1	FLAME SHIELD INSULATION ENGINE SIDE, BOTTOM
10	410863059	25	RIVET 3,2X16
11	410806223	8	RIVET 3,2X16
11	410867883	30	RIVET 3,2X8

Model : Spare Parts MURCIELAGO SV LP 670-4 Market: USA MY 2010

Group : 129-INTAKE MANIFOLD

Table : 129.03.00-INTAKE MANIFOLD

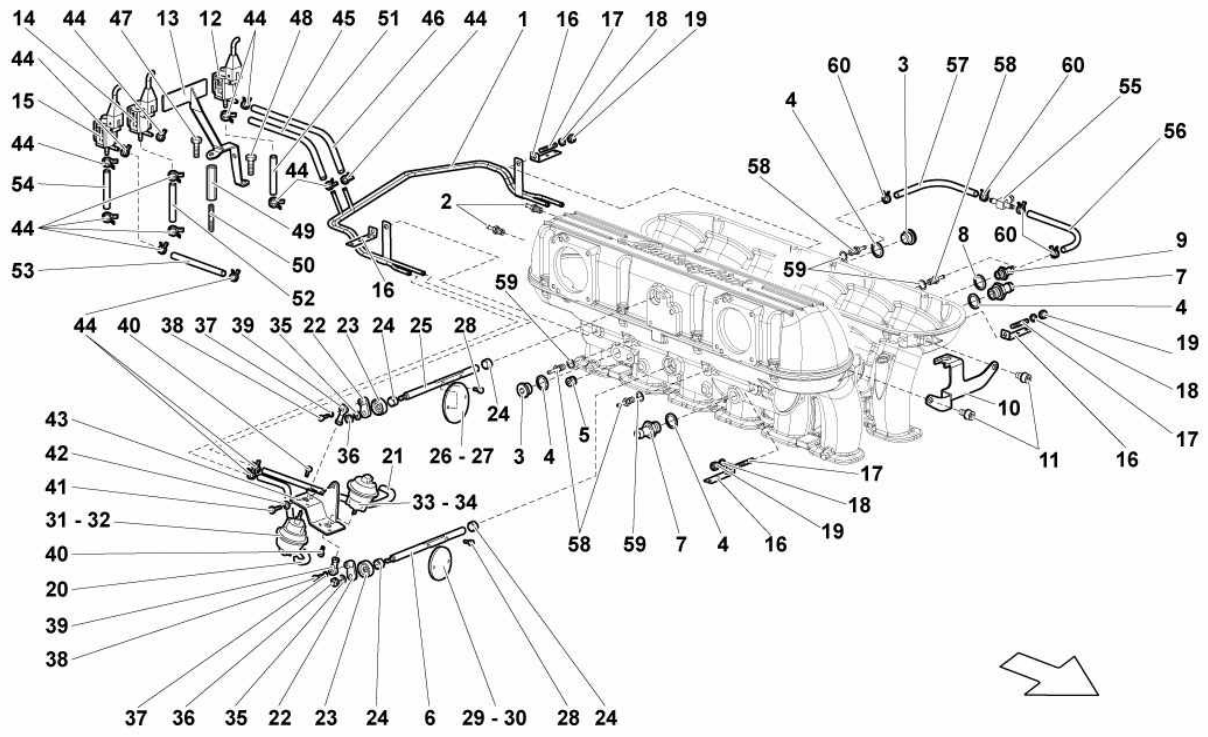

Ref.	Code	Q.ty	Description
1	07M133085B	1	PIPE
2	07L115707	2	CONNECTOR
3	N 91155901	2	PLUG
4	N 0138481	4	WASHER
5	07M103545	2	PLUG
6	07M129935B	2	SHAFT
7	07M133119A	2	CONNECTOR
8	WHT003047	1	WASHER
9	07M115113	1	CONNECTOR
10			BRACKET (SEE TABLE 141.02.00)
11			SCREW (SEE TABLE 141.02.00)
12	077906283	1	SOLENOID VALVE
13	07M906287D	1	SUPPORT
14	077906283	1	SOLENOID VALVE
15	077906283	1	SOLENOID VALVE
16	410971789A	4	BRACKET
17	008300658	4	STUD BOLT M6X14
18	WHT001197A	4	WASHER
19	N 02214812	4	NUT
20	07M133605A	2	PIPE (BLUE)
21	07M133727A	2	PIPE (RED)
22	07M129350A	4	LEVER
23	WHT003087	4	OIL SEAL
24	WHT003073	4	BUSHING
25	07M129935E	2	SHAFT
26	07M133931A	1	VALVE (RIGHT-HAND)
27	07M133931A	1	VALVE (LEFT)
28	WHT003089	8	SCREW M4X7

Model : Spare Parts MURCIELAGO SV LP 670-4 Market: USA MY 2010

Group : 129-INTAKE MANIFOLD

Table : 129.03.00-INTAKE MANIFOLD

Ref.	Code	Q.ty	Description
29	07M133931	1	VALVE (RIGHT-HAND)
30	07M133931	1	VALVE (LEFT)
31	07M907327	1	ACTUATOR (RIGHT-HAND)
32	07M907327	1	ACTUATOR (LEFT)
33	07M907327	1	ACTUATOR (RIGHT-HAND)
34	07M907327	1	ACTUATOR (LEFT)
35	WHT001514	4	WASHER
36	WHT003021	4	NUT
37	WHT003051A	4	WASHER
38	WHT003020	4	SCREW M3X12
39	07M129885	4	BALL JOINT
40	N 91049601	12	SCREW
41	N 90612002	4	SCREW M6X14
42	N 01152427	4	WASHER
43	07M907332A	2	SUPPORT
44	400127217	12	CLAMP
45	07M131847B	1	PIPE (BLUE)
46	07M131846B	1	PIPE (RED)
47	N 10451404	1	SCREW M6X16
48	N 91071702	1	SCREW M6X25
49	400972895	1	SPACER
50	N 0444625	1	STUD BOLT M6X25
51	07M131845A	1	PIPE (RED)
52	07M131853B	1	PIPE (BLUE)
53	07M131493A	1	PIPE
54	07M131492A	1	PIPE
55	410133381B	2	CONNECTOR
56	07M131850B	2	PIPE
57	07M131208A	2	PIPE
58	07M115113A	4	CONNECTOR
59	WHT001191	4	WASHER 10.2X14X1
60	N 90686701	10	CLAMP

Model : Spare Parts MURCIELAGO SV LP 670-4 Market: USA MY 2010

Group : 129-INTAKE MANIFOLD

Table : 129.02.00-INTAKE MANIFOLD

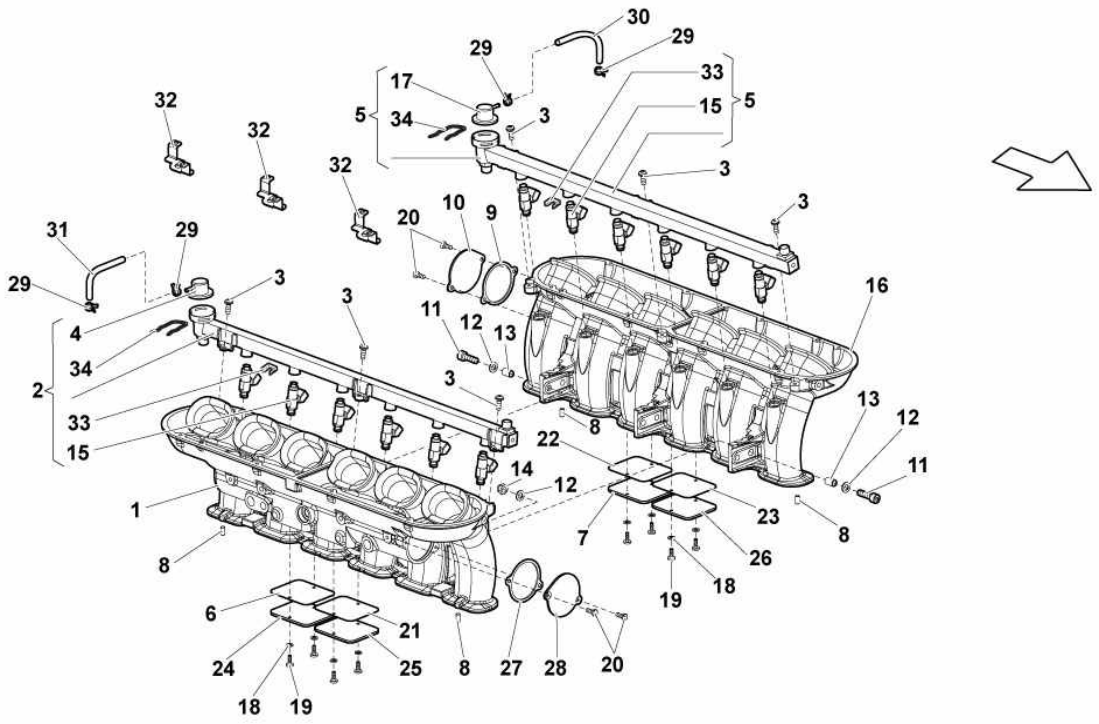

Ref.	Code	Q.ty	Description
1	07M133151C	1	MANIFOLD
2	07M133681F	1	LH PIPE
3	N 10451405	6	SCREW M6X16
4	07M133035A	1	REGULATOR
5	07M133681E	1	RH PIPE
6	07M133075A	1	GASKET
7	07M133100B	1	COVER
8	07M133615	4	DOWEL
9	07M133026B	1	GASKET
10	07M133211A	1	FLANGE
11	N 0147267	6	SCREW
12	WHT003096	6	WASHER
13	07M103143A	2	BUSHING
15	07M906031A	12	INJECTOR
16	07M133151C	1	MANIFOLD
17	07M133035A	1	REGULATOR
18	N 0115557	8	WASHER
19	N 10627501	8	SCREW M4X10
20	WHT003107	4	SCREW M5X16
21	07M133075A	1	GASKET
22	07M133075A	1	GASKET
23	07M133075A	1	GASKET
24	07M133100B	1	COVER
25	07M133100B	1	COVER
26	07M133100B	1	COVER
27	07M133026B	1	GASKET
28	07M133211A	1	FLANGE
29	400127217	4	CLAMP

Model : Spare Parts MURCIELAGO SV LP 670-4 Market: USA MY 2010

Group : 129-INTAKE MANIFOLD

Table : 129.02.00-INTAKE MANIFOLD

Ref.	Code	Q.ty	Description
30	07M133264C	1	PIPE
31	07M133264B	1	PIPE
32	07M103933	3	BRACKET
33	07M133047	12	CLIP
34	037133047A	2	CLIP

Model : Spare Parts MURCIELAGO SV LP 670-4 Market: USA MY 2010

Group : 129-INTAKE MANIFOLD

Table : 129.01.00-INTAKE MANIFOLD

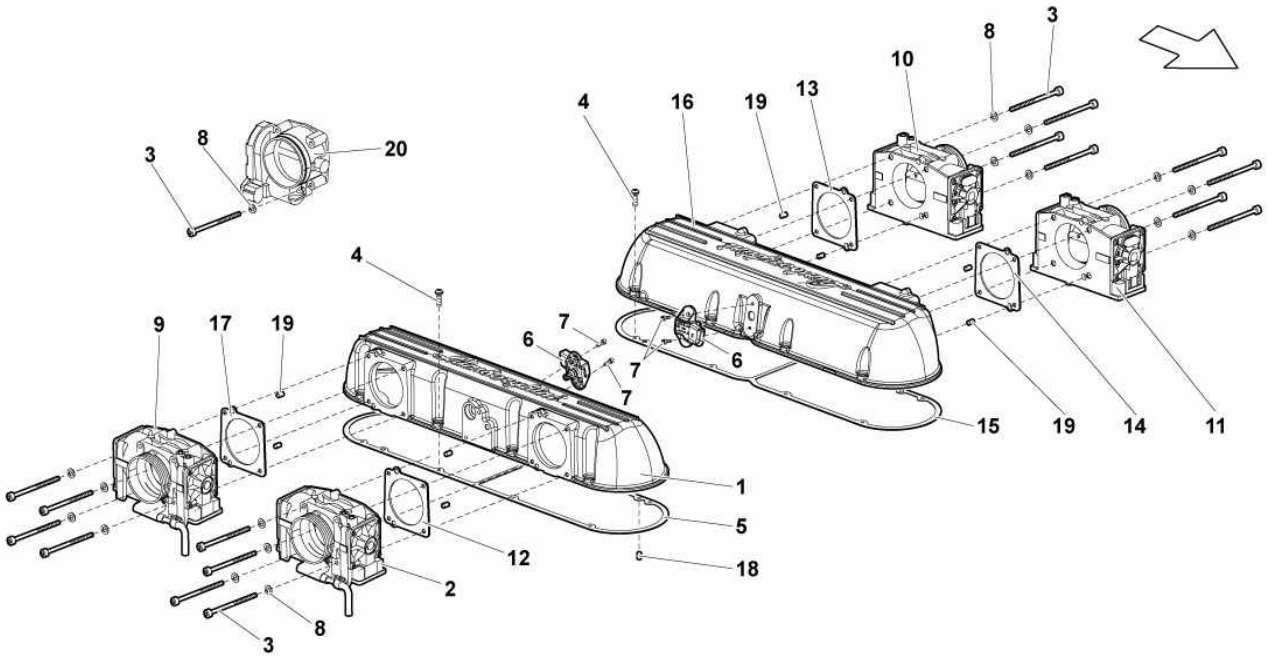

Ref.	Code	Q.ty	Description
1	07M133433H	1	COVER
2			MOTOR-DRIVEN THROTTLE BODY (VALID UP TO MODEL YEAR 08)
3	N 10470704	16	SCREW M6X50
4	N 10124308	16	SCREW M6X20
5	07M129707	1	GASKET
6	06B906051	2	TMAP SENSOR
7	N 10621601	4	SCREW M4X12
8	WHT001197A	2	WASHER
9			MOTOR-DRIVEN THROTTLE BODY (VALID UP TO MODEL YEAR 08)
10			MOTOR-DRIVEN THROTTLE BODY (VALID UP TO MODEL YEAR 08)
11			MOTOR-DRIVEN THROTTLE BODY (VALID UP TO MODEL YEAR 08)
12	021133073D	1	GASKET
13	021133073D	1	GASKET
14	021133073D	1	GASKET
15	07M129707	1	GASKET
16	07M133433H	1	COVER
17	021133073D	1	GASKET
18	07M133615	4	DOWEL
19	N 10703201	8	DOWEL
20	07M133062	4	MOTOR-DRIVEN THROTTLE BODY

Model : Spare Parts MURCIELAGO SV LP 670-4 Market: USA MY 2010

Group : 863-PASSENGER COMPARTMENT TRIMS

Table : 863.03.00-PASSENGER COMPARTMENT TRIMS

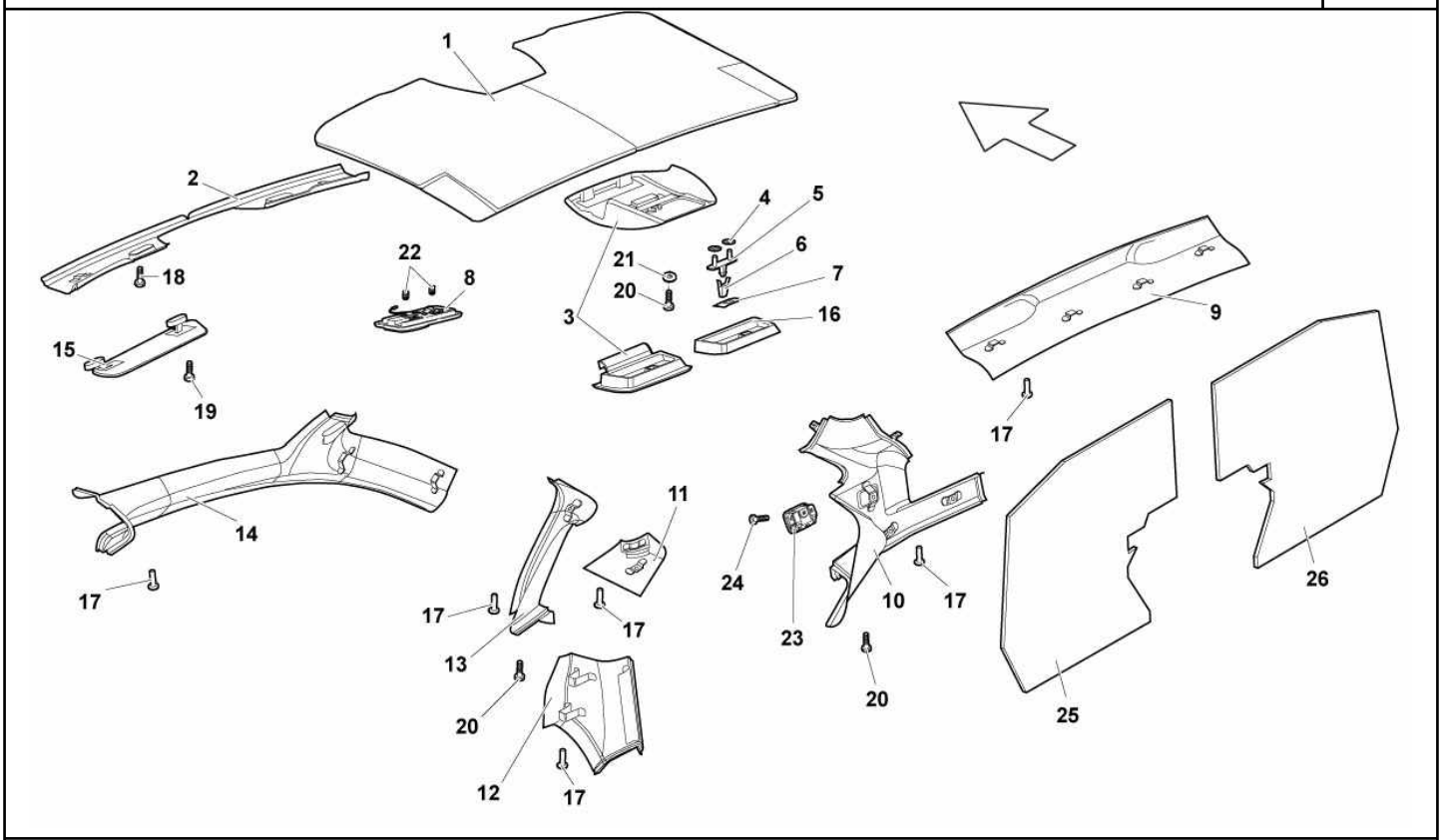

Ref.	Code	Q.ty	Description
1	418867505A	1	INSULATION (ALCANTARA UPHOLSTERY - SUPPLY VIN)
2	418868634A	1	WINDSHIELD CROSS MEMBER COVERING ASSEMBLY (ALCANTARA UPHOLSTERY - SUPPLY VIN)
3	418947099D	1	CEILING LIGHT GLASS BOX ASSEMBLY (ALCANTARA UPHOLSTERY - WITH PREDISPOSITION FOR BLUETOOTH - SUPPLY VIN)
4	N 01508213	2	NUT M6
5	410867646A	1	JOURNAL
6	410867543A	1	HOOK MECHANISM
7	418868847	1	SPRING
8	410947103	1	ROOF LAMP
9	418867361A	1	REAR WINDOW UPPER COVERING ASSEMBLY (ALCANTARA UPHOLSTERY - SUPPLY VIN)
10	418868199A	1	LEFT C-PILLAR COVERING ASSEMBLY (ALCANTARA UPHOLSTERY - SUPPLY VIN)
10	418868200A	1	RIGHT C-PILLAR COVERING ASSEMBLY (ALCANTARA UPHOLSTERY - SUPPLY VIN)
11	418867031A	1	HIGH-MOUNT LIGHT LEFT LOWER COVERING ASSEMBLY (ALCANTARA UPHOLSTERY - SUPPLY VIN)
11	418867032A	1	HIGH-MOUNT LIGHT RIGHT LOWER COVERING ASSEMBLY (ALCANTARA UPHOLSTERY - SUPPLY VIN)
12	418867243A	1	LEFT LOWER B-PILLAR COVERING ASSEMBLY (ALCANTARA UPHOLSTERY - SUPPLY VIN)
12	418867244A	1	RIGHT LOWER B-PILLAR COVERING ASSEMBLY (ALCANTARA UPHOLSTERY - SUPPLY VIN)
13	418867281A	1	LEFT UPPER B-PILLAR COVERING ASSEMBLY (ALCANTARA UPHOLSTERY - SUPPLY VIN)
13	418867282A	1	RIGHT UPPER B-PILLAR COVERING ASSEMBLY (ALCANTARA UPHOLSTERY - SUPPLY VIN)

Model : Spare Parts MURCIELAGO SV LP 670-4 Market: USA MY 2010

Group : 863-PASSENGER COMPARTMENT TRIMS

Table : 863.03.00-PASSENGER COMPARTMENT TRIMS

Ref.	Code	Q.ty	Description
14	418867233B	1	LEFT A-PILLAR COVERING ASSEMBLY (ALCANTARA UPHOLSTERY - SUPPLY VIN)
14	418867234B	1	RIGHT A-PILLAR COVERING ASSEMBLY (ALCANTARA UPHOLSTERY - SUPPLY VIN)
15	418857551B	1	LEFT SUN VISOR ASSEMBLY (ALCANTARA UPHOLSTERY - SUPPLY VIN)
15	418857552B	1	RIGHT SUN VISOR ASSEMBLY (ALCANTARA UPHOLSTERY - SUPPLY VIN)
16	418868678A	1	GLASS BOX INTERIOR COMPARTMENT
17	410863988	34	PLUG
18	WHT003111	8	SCREW M5X16
19	WHT003088	4	SCREW M4X16
20	N 10648502	8	SCREW M5X10
21	WHT003040	2	WASHER 5.3X1.5X15
22	006337066	2	LAMP
23	4D0857635E	2	HOOK
24	WHT001190	4	SCREW M5X12
25	418863731	1	LEFT REAR COVERING PANEL UNDER REAR WINDOW (WITH 3 POINTS STICHING - ALCANTARA UPHOLSTERY - SUPPLY VIN)
25	429863731	1	LEFT REAR COVERING PANEL UNDER REAR WINDOW (WITH 4 POINTS STICHING - ALCANTARA UPHOLSTERY - SUPPLY VIN)
26	418863732	1	RIGHT REAR COVERING PANEL UNDER REAR WINDOW (WITH 3 POINTS STICHING - ALCANTARA UPHOLSTERY - SUPPLY VIN)
26	429863732	1	RIGHT REAR COVERING PANEL UNDER REAR WINDOW (WITH 4 POINTS STICHING - ALCANTARA UPHOLSTERY - SUPPLY VIN)

Model : Spare Parts MURCIELAGO SV LP 670-4 Market: USA MY 2010

Group : 412-JACKING SYSTEM

Table : 412.01.00-JACKING SYSTEM

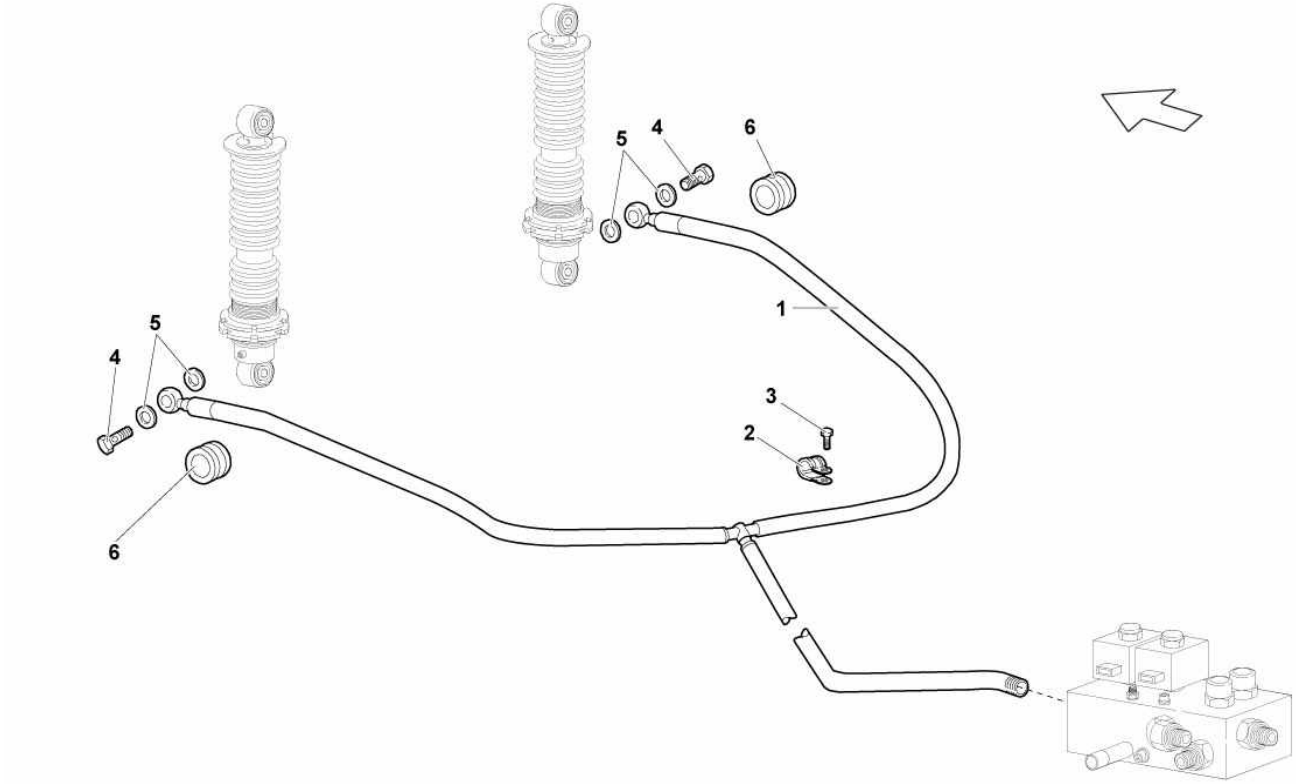

Ref.	Code	Q.ty	Description
1	410616733B	1	PIPE
2	N 0206026	4	CLAMP
3	N 10546402	4	SCREW
4	WHT003303	2	SCREW WITH HOLE
5	400616817A	4	WASHER
6	400820287	2	FAIRLEAD

Model : Spare Parts MURCIELAGO SV LP 670-4 Market: USA MY 2010

Group : 837-DOORS - KEYS KIT

Table : 837.01.00-KEYS KIT

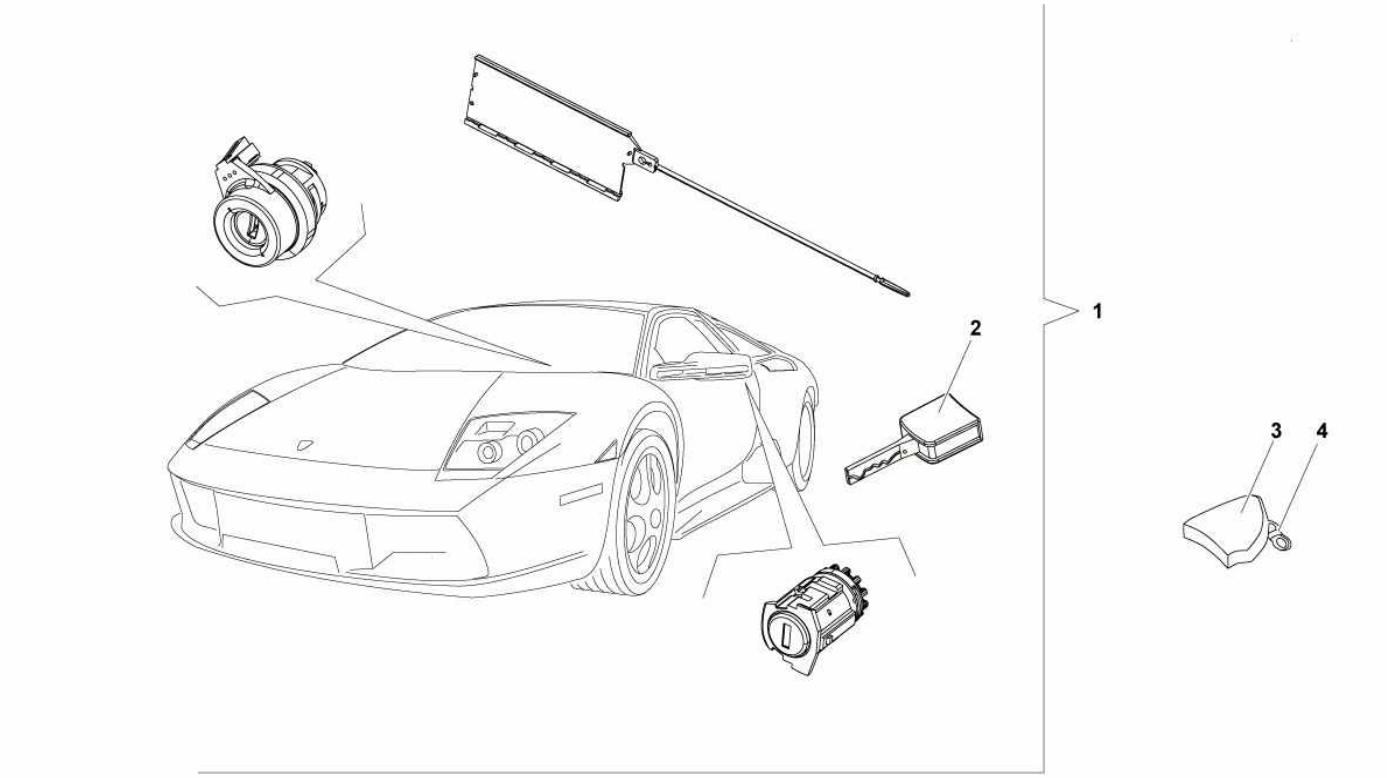

Ref.	Code	Q.ty	Description
1	410837219	1	KEY AND PAWL KIT
2	400837246A	1	KEY (SUPPLY VIN)
3	410937046	1	REMOTE CONTROL (SUPPLY VIN)
4	4D0905835	2	KEY-RING

Model : Spare Parts MURCIELAGO SV LP 670-4 Market: USA MY 2010

Group : 103-ENGINE

Table : 103.04.00-LEFT CYLINDER HEAD AND COVER

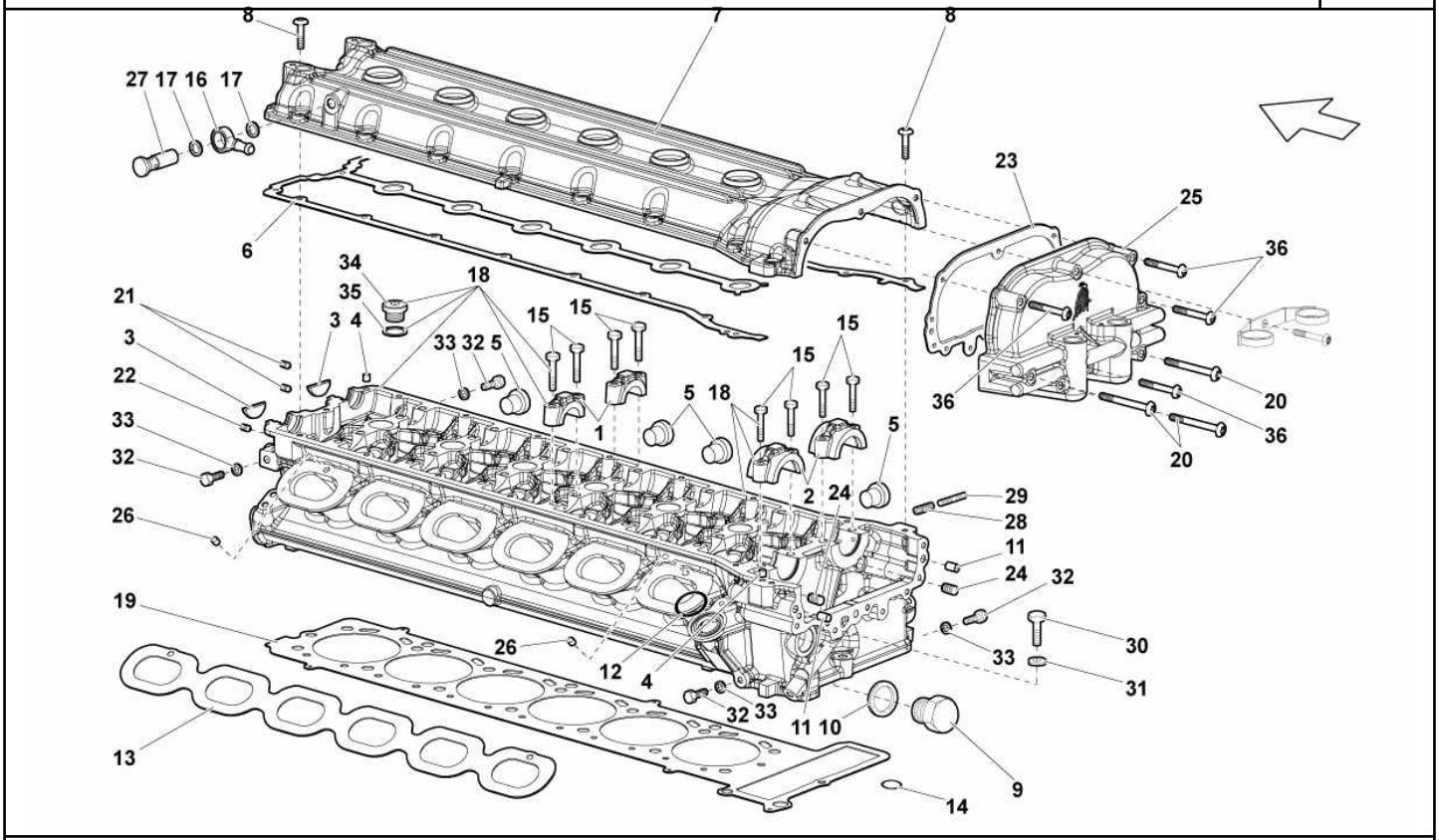

Ref.	Code	Q.ty	Description
1	07M103127A	12	SUPPORT
2	07M103285B	2	SUPPORT
3	07M103113	2	COVER
4	N 10703201	2	DOWEL
5	N 01190311	4	PLUG
6	07M103483C	1	GASKET
7	07M103475D	1	COVER
8	N 91071702	17	SCREW
9	07M103035	1	PLUG
10	WHT003049	1	WASHER
11	07M109221A	2	BUSHING
12	WHT003062	1	SEAL RING
13	07M129717B	1	GASKET
14	WHT003522	1	SEAL RING
15	N 10554005	28	SCREW
16	07M103606A	1	PIPE FITTING
17	N 91116801	2	WASHER
18	460537004	1	LH CYLINDER HEAD (COMPLETE)
19	07M103149B	1	LH GASKET
20	N 10562603	3	SCREW
21	07M103545	2	PLUG
22	07M103545	1	PLUG
23	07M109091	1	GASKET
24	07M103545	2	PLUG
25	07M109144F	1	LHHEAD PHASE TRANSFORMER COVER ASSEMBLY
26	07M133615	2	DOWEL
27	WHT001669	1	SCREW
28	008840802	12	HELI-COIL

Model : Spare Parts MURCIELAGO SV LP 670-4 Market: USA MY 2010

Group : 103-ENGINE

Table : 103.04.00-LEFT CYLINDER HEAD AND COVER

Ref.	Code	Q.ty	Description
30	N 01033520	2	SCREW
31	WHT000771	2	WASHER
32	N 0102358	3	SCREW
33	N 0138302	3	WASHER
34	N 0160282	7	PLUG
35	N 0138481	7	WASHER
36	N 10582103	4	SCREW

Model : Spare Parts MURCIELAGO SV LP 670-4 Market: USA MY 2010

Group : 109-TIMING SYSTEM

Table : 109.01.00-LEFT HEAD TIMING SYSTEM

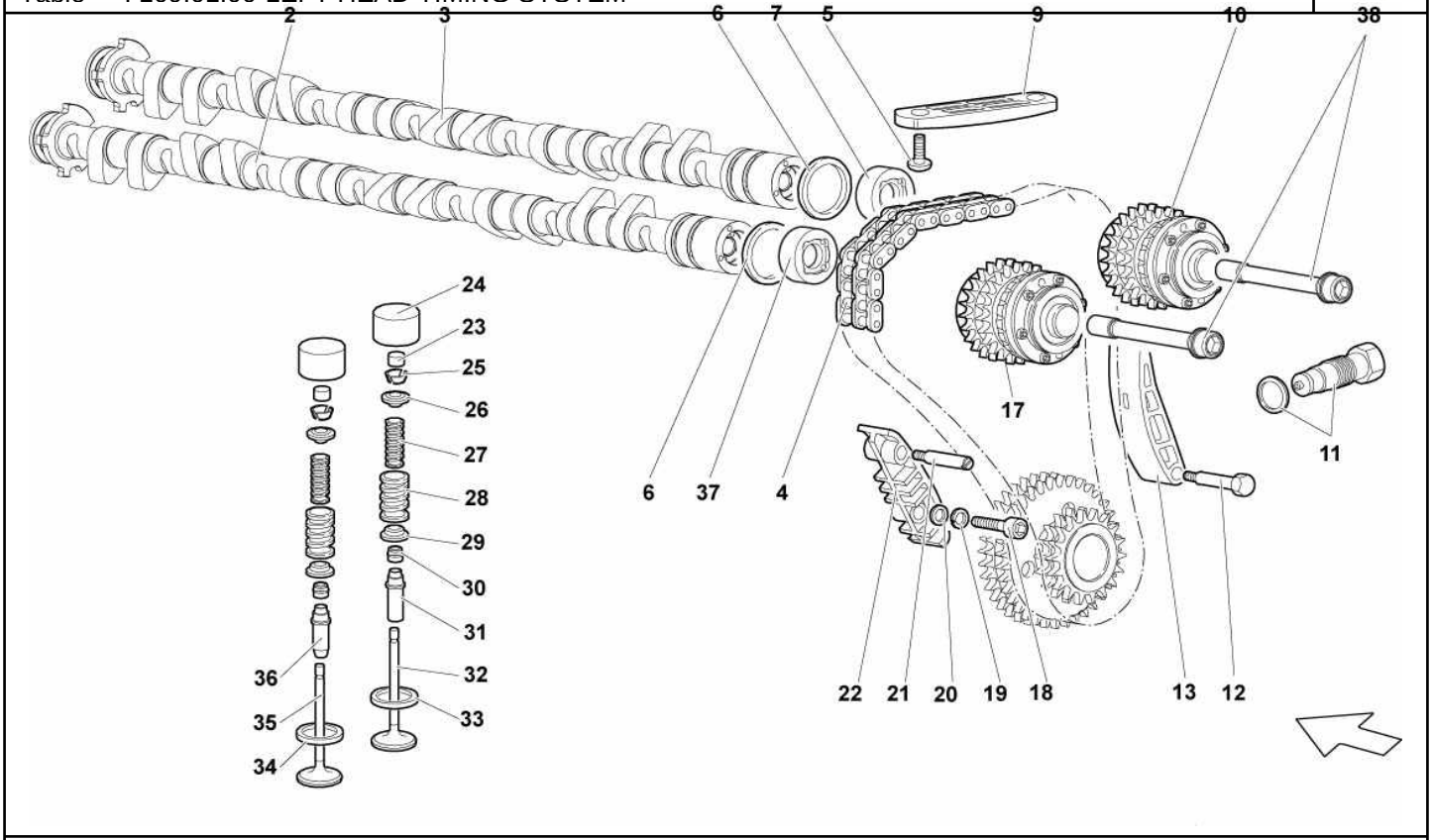

Ref.	Code	Q.ty	Description
2	07M109303L	1	INTAKE CAMSHAFT
3	07M109305H	1	EXHAUST CAMSHAFT
4	07M109231	1	UPPER TIMING CHAIN
5	N 90638102	2	SCREW
6	07M109349	2	OIL SEAL
7	07M109423A	1	SUPPORT
9	07M109513	1	SHOE
10	07M109084D	1	EXHAUST PHASE TRANSFORMER
11	07M109255	1	CHAIN TIGHTENER
12	07M109225A	1	JOURNAL
13	07M109508	1	SHOE
17	07M109083C	1	INTAKE PHASE TRANSFORMER
18	WHT003071	1	SCREW
19	WHT001397	1	WASHER
20	WHT002962	1	WASHER
21	07M109224	1	JOURNAL
22	07M109469	1	SHOE
23	07M109320BP	24	ADJUSTMENT SHIM (1,60 MM)
23	07M109320BQ	24	ADJUSTMENT SHIM (1,65 MM)
23	07M109320BR	24	ADJUSTMENT SHIM (1,70 MM)
23	07M109320BS	24	ADJUSTMENT SHIM (1,75 MM)
23	07M109320BT	24	ADJUSTMENT SHIM (1,80 MM)
23	07M109320CA	24	ADJUSTMENT SHIM (1,85 MM)
23	07M109320CB	24	ADJUSTMENT SHIM (1,90 MM)
23	07M109320CC	24	ADJUSTMENT SHIM (1,95 MM)
23	07M109320CD	24	ADJUSTMENT SHIM (2,00 MM)
23	07M109320CE	24	ADJUSTMENT SHIM (2,05 MM)
23	07M109320CF	24	ADJUSTMENT SHIM (2,10 MM)

Model : Spare Parts MURCIELAGO SV LP 670-4 Market: USA MY 2010

Group : 109-TIMING SYSTEM

Table : 109.01.00-LEFT HEAD TIMING SYSTEM

Ref.	Code	Q.ty	Description
23	07M109320CG	24	ADJUSTMENT SHIM (2,15 MM)
23	07M109320CH	24	ADJUSTMENT SHIM (2,20 MM)
23	07M109320CJ	24	ADJUSTMENT SHIM (2,25 MM)
23	07M109320CK	24	ADJUSTMENT SHIM (2,30 MM)
23	07M109320CL	24	ADJUSTMENT SHIM (2,35 MM)
23	07M109320CM	24	ADJUSTMENT SHIM (2,40 MM)
23	07M109320CN	24	ADJUSTMENT SHIM (2,45 MM)
23	07M109320CP	24	ADJUSTMENT SHIM (2,50 MM)
23	07M109320CQ	24	ADJUSTMENT SHIM (2,55 MM)
24	07M109309A	24	VALVE CONTROL TAPPET
25	036109651B	48	VALVE COTTER
26	07M109641A	24	TAPPET UPPER PLATE
27	07M109633B	24	INNER SPRING
28	07M109623B	24	OUTER SPRING
29	07M109642B	24	TAPPET LOWER PLATE
30	057109675	24	SEAL RING
31			EXHAUST VALVE GUIDE (CANNOT BE SOLD SEPARATELY)
32	07M109611A	24	EXHAUST VALVE
33			EXHAUST VALVE SEAT (CANNOT BE SOLD SEPARATELY)
34			INTAKE VALVE SEAT (CANNOT BE SOLD SEPARATELY)
35	07M109601B	24	INTAKE VALVE
36			INTAKE VALVE GUIDE (CANNOT BE SOLD SEPARATELY)
37	07M109423A	1	SUPPORT
38	07M109177C	2	SCREW

Model : Spare Parts MURCIELAGO SV LP 670-4 Market: USA MY 2010

Group : 941-LIGHTS

Table : 941.01.00-LIGHTS

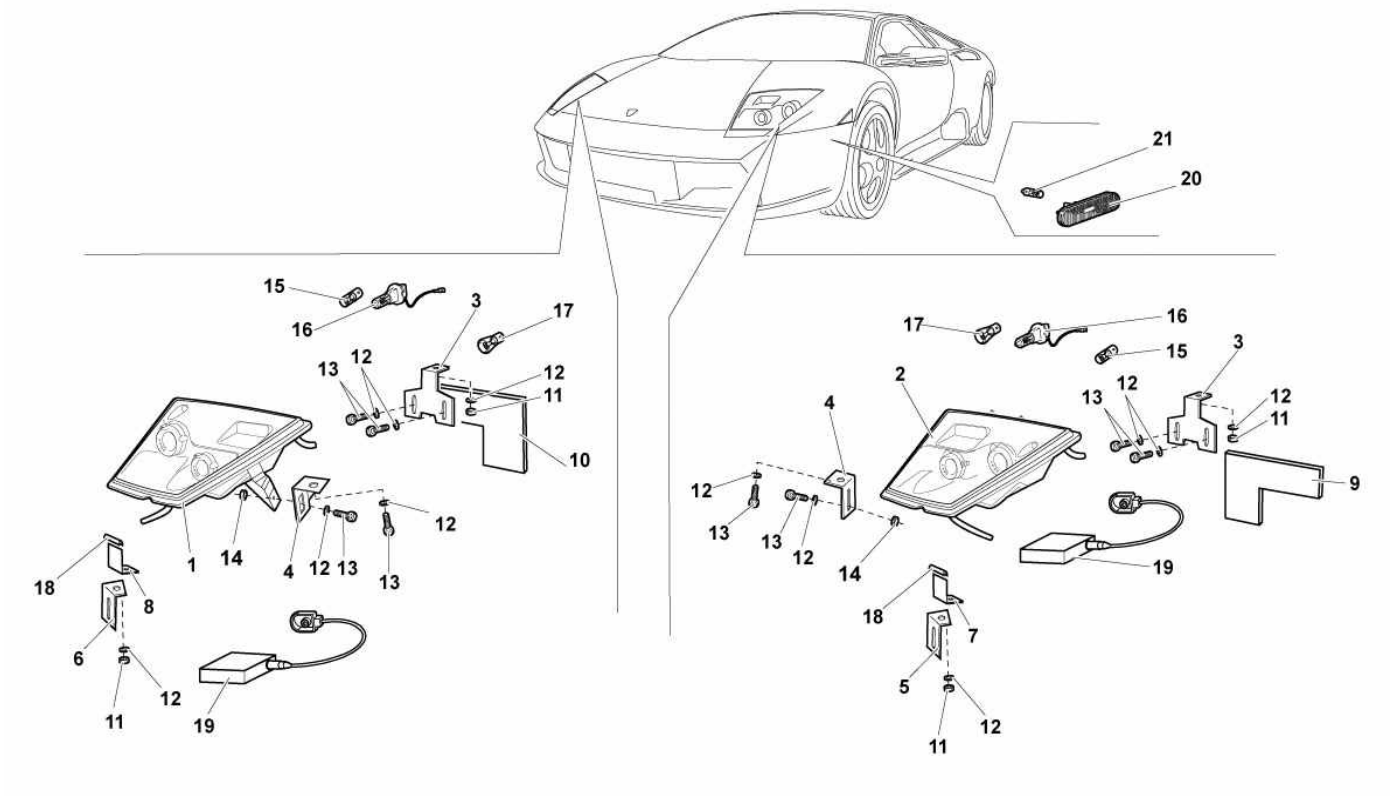

Ref.	Code	Q.ty	Description
1	413941032A	1	RH FRONT HEADLIGHT ASSEMBLY
2	413941031A	1	LH FRONT HEADLIGHT ASSEMBLY
3	410941355	2	BRACKET
4	410941155	2	BRACKET
5	410941057	1	LH BRACKET
6	410941058	1	RH BRACKET
7	410941451	2	LH BRACKET
8	410941452	2	RH BRACKET
9	410941981	1	LH PROTECTION
10	410941982	1	RH PROTECTION
11	WHT002953	6	NUT M6
12	WHT002961	12	WASHER 6.5X18X1.5
13	N 90319404	8	SCREW M6
14	N 01508213	2	NUT 6X1X10
15	N 0177539	1	LAMP 12V/5W
16	N 10445703	2	LAMP 12V/35W P32D-2
17	N 10445601	2	LAMP 12V/21W BAY9S
18	410941119	2	GASKET
19	3B0941641	2	FRONT HEADLIGHT CONTROL UNIT
20	410945071	1	FRONT LEFT SIDE MARKER
20	410945072	1	FRONT RIGHT SIDE MARKER
21	N 0177522	2	LAMP

Model : Spare Parts MURCIELAGO SV LP 670-4 Market: USA MY 2010

Group : 945-LIGHTS

Table : 945.01.00-LIGHTS

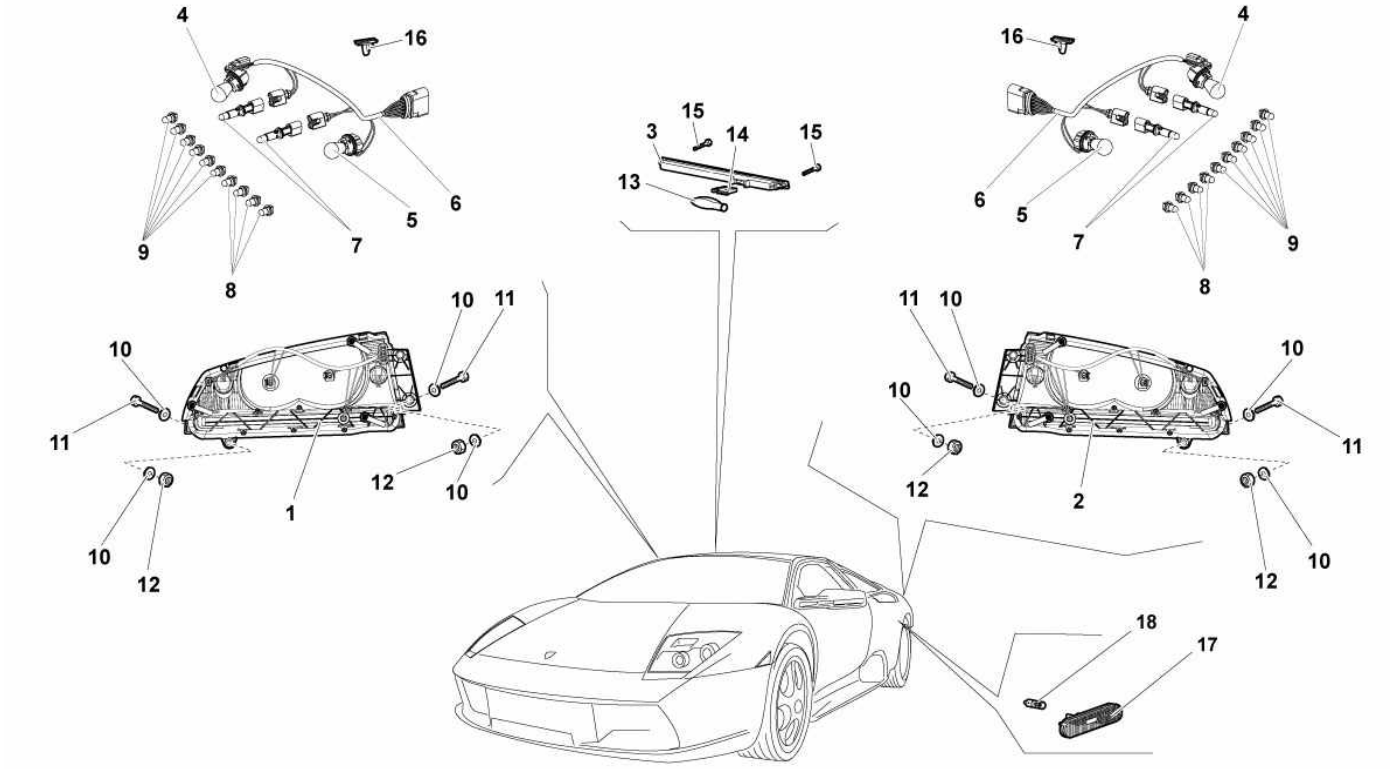

Ref.	Code	Q.ty	Description
3	410945249A	1	HIGH-MOUNT BRAKE LIGHT
4	006617091	2	LAMP 21W/5W
5	006617094	2	LAMP 21W
6			WIRING HARNESS (CANNOT BE SOLD SEPARATELY - SEE REF. 1 - 2)
7	N 90054401	4	LAMP W3W
8	N 0177539	8	LAMP W5W
9	N 01775311	12	LAMP WY5W
10	N 01166623	4	WASHER
11	N 10607601	4	SCREW M6X25
12	WHT000765	4	NUT
13	410945090	1	PROTECTION
14	867906231	1	CONNECTOR
15	WHT003104	2	SCREW M4X25
17	410945061	1	REAR LEFT SIDE MARKER
17	410945062	1	REAR RIGHT SIDE MARKER
18	N 0177522	2	LAMP

Model : Spare Parts MURCIELAGO SV LP 670-4 Market: USA MY 2010

Group : 311-GEARBOX SHIFTING RODS AND SHAFTS

Table : 311.02.00-MAIN SHAFT

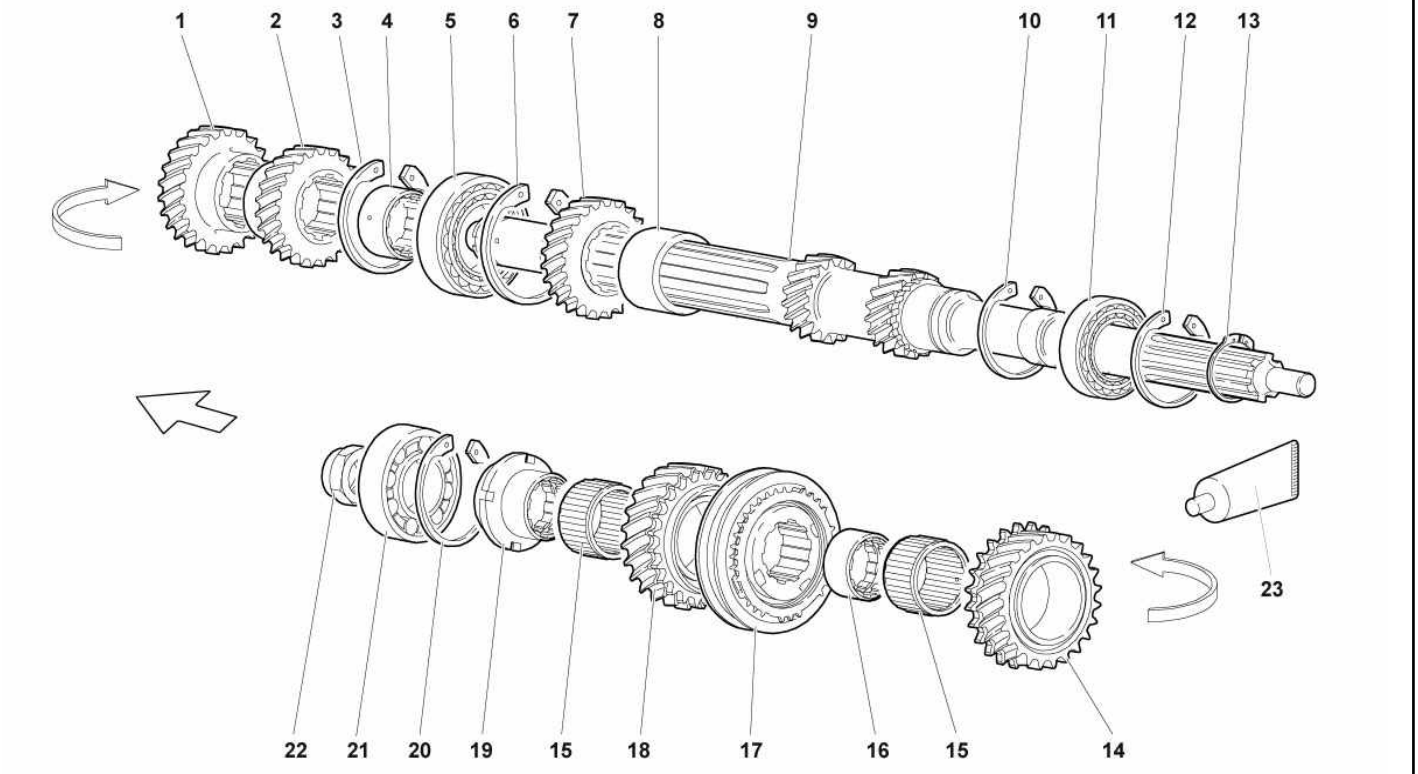

Ref.	Code	Q.ty	Description
1	086311149A	1	FOURTH GEAR
2	086311131B	1	THIRD GEAR
3	WHT003584	1	SEAL RING
4	086311187B	1	INNER RING
5	086301133	1	BEARING
6	WHT003584	1	SEAL RING
7	086311261	1	SECOND GEAR
8	086311357A	1	SPACER
9	086311101D	1	MAIN SHAFT (To order together with the ref. 2 of the table 311.03.00)
10	WHT002544	1	SEAL RING
11	086301897	1	BEARING
12	WHT002544	1	SEAL RING
13	N 0123761	1	SEAL RING
14	086311361G	1	FIFTH GEAR ASSEMBLY + CROWN GEAR
15	086311228A	2	ROLLER CAGE
16	086301374A	1	BUSHING
17	086311309B	1	SYNCHRONIZING GEAR D.71/76 + CROWN GEAR
18	086311389F	1	SIXTH GEAR ASSEMBLY WITH CROWN GEAR
19	086311693	1	INNER RING
20	WHT003584	1	SEAL RING
21	086301845	1	BEARING
22	086301618	1	RING NUT
23	900000130	1	GREASE

® Automobili Lamborghini S.p.A.
The information and procedures published below are strictly confidential and exclusively for the Lamborghini Dealer Network and Authorized Service Points. All copyrights are property of Automobili Lamborghini S.p.A based on copyright law. All of the PDF chapters in the WEB workshop manuals described below are based on information available at the time of publication. The company reserves the right to make updates and modifications. The following are prohibited: reprinting, reproduction, forwarding to unauthorized people and/or third parties, and translation, including partial, without written authorization from Automobili Lamborghini S.p.A.

Each page of the Workshop Manual includes the information defined below:

A Car Model
B Group
C Subgroup
D Title
E Page number.

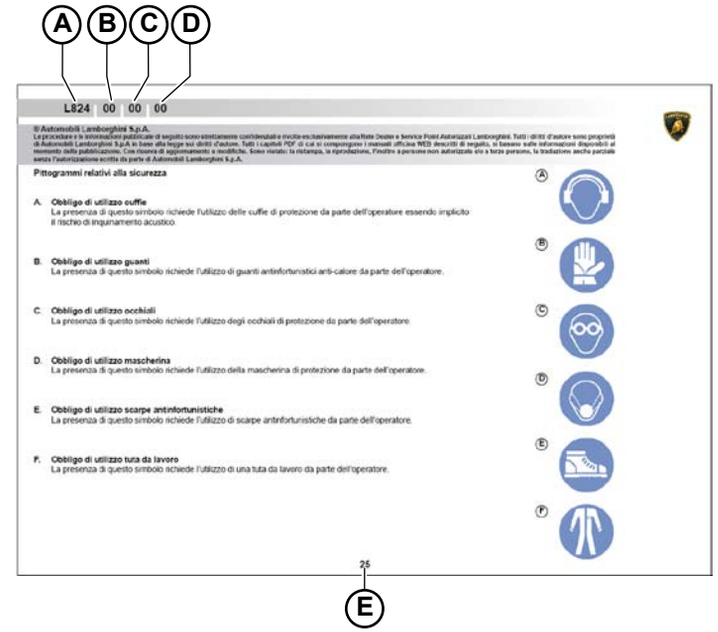

The Workshop Manual file names include the information explained below:

A Car Model
B Group (see the structure tables)
C Subgroup (see the structure tables)
D Title (see the structure tables)
E Market
F Model Year
G Language
H Document review

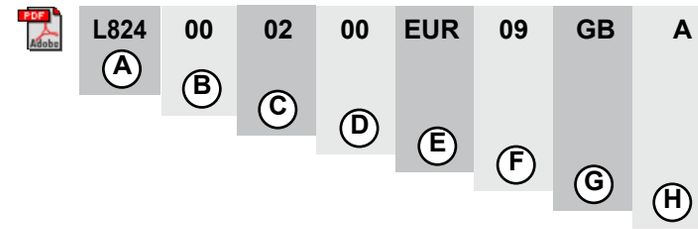

® Automobili Lamborghini S.p.A.
The information and procedures published below are strictly confidential and exclusively for the Lamborghini Dealer Network and Authorized Service Points. All copyrights are property of Automobili Lamborghini S.p.A based on copyright law. All of the PDF chapters in the WEB workshop manuals described below are based on information available at the time of publication. The company reserves the right to make updates and modifications. The following are prohibited: reprinting, reproduction, forwarding to unauthorized people and/or third parties, and translation, including partial, without written authorization from Automobili Lamborghini S.p.A.

Structure

Main group		Subgroup		Title identification	
00	General information	**00**	General information	**00**	Description
		01	Equipment	**01**	Check (control)
		02	Special tools	**02**	Adjustment
		03	Oils, grease, lubricants and liquids	**03**	Disassemble
		04	Engine	**04**	Cleaning
		05	Manual gearbox	**05**	Assemble
		06	E-gear	**06**	Bleeding
		07	Body	**07**	Fluids substitution
		08	Torque	**08**	Filling and topping up
		09	Electrical information	**09**	Overhaul
		10	Scrapping	**10**	Error code
		11	Car selflevelling kit	**11**	Measurement block reading or parameters
		12	Accessory kit	**12**	Running-in
		13	Serial number	**13**	Adjustment coding
		88	Check list	**14**	Diagnosis software
		89	PDI (pre-delivery checks)	**85**	1.5 miles (x 1000) - 2.5 Km (x 1000)
		90	Maintenance plan and frequency	**86**	7.5 miles (x 1000) - 12 Km (x 1000)
		91	Car general presentation	**87**	15 miles (x 1000) - 24 Km (x 1000)
				88	22.5 miles (x 1000) - 36 Km (x 1000)
				89	30 miles (x 1000) - 48 Km (x 1000)
				90	37.5 miles (x 1000) - 60 Km (x 1000)
				91	45 miles (x 1000) - 72 Km (x 1000)
				92	52.5 miles (x 1000) - 84 Km (x 1000)
				93	60 miles (x 1000) - 96 Km (x 1000)
				94	67.5 miles (x 1000) - 108 Km (x 1000)
				95	75 miles (x 1000) - 120 Km (x 1000)
				96	82.5 miles (x 1000) - 132 Km (x 1000)
				97	90 miles (x 1000) - 144 Km (x 1000)
				98	97.5 miles (x 1000) - 156 Km (x 1000)
				99	105 miles (x 1000) - 168 Km (x 1000)

® Automobili Lamborghini S.p.A.
The information and procedures published below are strictly confidential and exclusively for the Lamborghini Dealer Network and Authorized Service Points. All copyrights are property of Automobili Lamborghini S.p.A based on copyright law. All of the PDF chapters in the WEB workshop manuals described below are based on information available at the time of publication. The company reserves the right to make updates and modifications. The following are prohibited: reprinting, reproduction, forwarding to unauthorized people and/or third parties, and translation, including partial, without written authorization from Automobili Lamborghini S.p.A.

Main group		Subgroup		Title identification	
01	Engine	**00**	Assemblies	**00**	Description
		01	Auxiliary belt	**01**	Check (control)
		03	Crankcase, cylinder, cylinder head	**02**	Adjustment
		05	Crankshaft, connecting rods	**03**	Disassemble
		07	Pistons, rings, pins, liners	**04**	Cleaning
		09	Camshaft, valves	**05**	Assemble
		15	Oil pump	**06**	Bleeding
		16	Variable valve timing mechanism	**07**	Fluids substitution
		17	Oil cooler	**08**	Filling and topping up
		19	Air intercooler	**09**	Overhaul
		21	Water cooling	**10**	Error code
		22	Water pump	**11**	Measurement block reading or parameters
		27	Fuel pump & lines	**12**	Running-in
		28	Injection system	**13**	Adjustment coding
		29	Air intake manifold	**14**	Diagnosis software
		30	Oil filter		
		31	Catalyst		
		33	Intake air filter		
		41	Clutch / Flywheel		
		42	Automatic clutch (E-gear)		
		45	Turbocharger		
		90	Timing system		
		98	Repair kit		
		99	Fixing and suspension		

® Automobili Lamborghini S.p.A.
The information and procedures published below are strictly confidential and exclusively for the Lamborghini Dealer Network and Authorized Service Points. All copyrights are property of Automobili Lamborghini S.p.A based on copyright law. All of the PDF chapters in the WEB workshop manuals described below are based on information available at the time of publication. The company reserves the right to make updates and modifications. The following are prohibited: reprinting, reproduction, forwarding to unauthorized people and/or third parties, and translation, including partial, without written authorization from Automobili Lamborghini S.p.A.

Main group		Subgroup		Title identification	
02	Fuel tank, exhaust system, heating,	**00**	Assemblies	**00**	Description
	Climate system	**01**	Fuel tank	**01**	Check (control)
		02	Exhaust pressure control	**02**	Adjustment
		03	Fuel system parts	**03**	Disassemble
		09	Fuel cooling	**04**	Cleaning
		51	Exhaust system	**05**	Assemble
		53	Oxygen sensor	**06**	Bleeding
		54	Catalyst temperature sensor	**07**	Fluids substitution
		60	Air conditioning, engine parts (+ sensors)	**08**	Filling and topping up
		61	Auxilliary heater	**09**	Overhaul
		65	Geater	**10**	Error code
		90	Control number	**11**	Measurement block reading or parameters
		98	Repair kit	**12**	Running-in
		99	Fixing with suspension	**13**	Adjustment coding
				14	Diagnosis software

® Automobili Lamborghini S.p.A.
The information and procedures published below are strictly confidential and exclusively for the Lamborghini Dealer Network and Authorized Service Points. All copyrights are property of Automobili Lamborghini S.p.A based on copyright law. All of the PDF chapters in the WEB workshop manuals described below are based on information available at the time of publication. The company reserves the right to make updates and modifications. The following are prohibited: reprinting, reproduction, forwarding to unauthorized people and/or third parties, and translation, including partial, without written authorization from Automobili Lamborghini S.p.A.

Main group		Subgroup		Title identification	
03	Transmission	**00**	Assemblies	**00**	Description
		01	Transmission housing	**01**	Check (control)
		07	Gears & shafts	**02**	Adjustment
		08	Rods / Forks	**03**	Disassemble
		09	Selespeed sensor	**04**	Cleaning
		11	Synchroni. Gears	**05**	Assemble
		15	Oil pump	**06**	Bleeding
		17	Oil cooler	**07**	Fluids substitution
		21	Transmission housing e-gear	**08**	Filling and topping up
		23	Shifting / lever	**09**	Overhaul
		25	Automatic trans. control	**10**	Error code
		31	Disc sets	**11**	Measurement block reading or parameters
		41	Transfer case	**12**	Running-in
		90	Control number	**13**	Adjustment coding
		98	Repair kit	**14**	Diagnosis software
		99	Fixing with suspension		

® Automobili Lamborghini S.p.A.
The information and procedures published below are strictly confidential and exclusively for the Lamborghini Dealer Network and Authorized Service Points. All copyrights are property of Automobili Lamborghini S.p.A based on copyright law. All of the PDF chapters in the WEB workshop manuals described below are based on information available at the time of publication. The company reserves the right to make updates and modifications. The following are prohibited: reprinting, reproduction, forwarding to unauthorized people and/or third parties, and translation, including partial, without written authorization from Automobili Lamborghini S.p.A.

Main group		Subgroup		Title identification	
04	Front axle, steering	**00**	Assemblies	**00**	Description
		01	Front axle beam	**01**	Check (control)
		02	Viscous coupling	**02**	Adjustment
		03	Lifting system	**03**	Disassemble
		04	Wheel alignment	**04**	Cleaning
		07	Front wheel bearings and hubs	**05**	Assemble
		09	Front differential	**06**	Bleeding
		10	Anti-roll bar	**07**	Fluids substitution
		11	Front springs	**08**	Filling and topping up
		12	Suspension strut, front	**09**	Overhaul
		13	Shock absorbers	**10**	Error code
		19	Steering (rack)	**11**	Measurement block reading or parameters
		22	Power steering	**12**	Running-in
		23	Pump power steering	**13**	Adjustment coding
		25	Steering damper	**14**	Diagnosis software
		90	Control number		
		98	Repair kit		
		99	Fixing with suspension		

® Automobili Lamborghini S.p.A.
The information and procedures published below are strictly confidential and exclusively for the Lamborghini Dealer Network and Authorized Service Points. All copyrights are property of Automobili Lamborghini S.p.A based on copyright law. All of the PDF chapters in the WEB workshop manuals described below are based on information available at the time of publication. The company reserves the right to make updates and modifications. The following are prohibited: reprinting, reproduction, forwarding to unauthorized people and/or third parties, and translation, including partial, without written authorization from Automobili Lamborghini S.p.A.

Main group		Subgroup		Title identification	
05	Rear axle	**00**	Assemblies	**00**	Description
		01	Rear drive shaft	**01**	Check (control)
		04	Wheel alignment	**02**	Adjustment
		05	Rear axle carrier	**03**	Disassemble
		07	Rear wheel and rear hubs	**04**	Cleaning
		09	Rear differential	**05**	Assemble
		10	Anti-roll bar	**06**	Bleeding
		11	Rear springs	**07**	Fluids substitution
		12	Suspension strut, rear	**08**	Filling and topping up
		13	Shock absorber	**09**	Overhaul
		17	Differential gear manual gearbox	**10**	Error code
		19	Differential gear e-gear	**11**	Measurement block reading or parameters
		21	Propeller shaft (Gear - Front diff.)	**12**	Running-in
		23	Power steering pump	**13**	Adjustment coding
		25	.....	**14**	Diagnosis software
		90	Control number		
		98	Repair kit		
		99	Fixing with suspension		

® Automobili Lamborghini S.p.A.
The information and procedures published below are strictly confidential and exclusively for the Lamborghini Dealer Network and Authorized Service Points. All copyrights are property of Automobili Lamborghini S.p.A based on copyright law. All of the PDF chapters in the WEB workshop manuals described below are based on information available at the time of publication. The company reserves the right to make updates and modifications. The following are prohibited: reprinting, reproduction, forwarding to unauthorized people and/or third parties, and translation, including partial, without written authorization from Automobili Lamborghini S.p.A.

Main group		Subgroup		Title identification	
06	Wheels, Brakes	**00**	Assemblies	**00**	Description
		01	Disk, wheel, tires	**01**	Check (control)
		02	Parking brake	**02**	Adjustment
		07	Brakes, caliper	**03**	Disassemble
		09	Brakes, hydrl.	**04**	Cleaning
		11	Brake cylinder and circuits	**05**	Assemble
		12	Servo brake	**06**	Bleeding
		14	ABS and braking force adjusting system	**07**	Fluids substitution
		15	Disc brake & brake pad	**08**	Filling and topping up
		16	Self levelling system	**09**	Overhaul
		17	TCS-system	**10**	Error code
		18	ESP-system	**11**	Measurement block reading or parameters
		90	Control number	**12**	Running-in
		98	Repair kit	**13**	Adjustment coding
		99	Fixing with suspension	**14**	Diagnosis software

® Automobili Lamborghini S.p.A.
The information and procedures published below are strictly confidential and exclusively for the Lamborghini Dealer Network and Authorized Service Points. All copyrights are property of Automobili Lamborghini S.p.A based on copyright law. All of the PDF chapters in the WEB workshop manuals described below are based on information available at the time of publication. The company reserves the right to make updates and modifications. The following are prohibited: reprinting, reproduction, forwarding to unauthorized people and/or third parties, and translation, including partial, without written authorization from Automobili Lamborghini S.p.A.

Main group		Subgroup		Title identification	
07	Running gear / chassis	**00**	Assemblies	**00**	Description
		01	Running gear	**01**	Check (control)
		03	Frame accessory parts	**02**	Adjustment
		05	Running gear	**03**	Disassemble
		11	Hand lever control manual gearbox	**04**	Cleaning
		13	Lever control e-gear	**05**	Assemble
		21	Pedal cluster	**06**	Bleeding
		23	Pedal cluster e-gear	**07**	Fluids substitution
		77	Test	**08**	Filling and topping up
		90	Control number	**09**	Overhaul
		98	Repair kit	**10**	Error code
		99	Fixing with suspension	**11**	Measurement block reading or parameters
				12	Running-in
				13	Adjustment coding
				14	Diagnosis software

® Automobili Lamborghini S.p.A.
The information and procedures published below are strictly confidential and exclusively for the Lamborghini Dealer Network and Authorized Service Points. All copyrights are property of Automobili Lamborghini S.p.A based on copyright law. All of the PDF chapters in the WEB workshop manuals described below are based on information available at the time of publication. The company reserves the right to make updates and modifications. The following are prohibited: reprinting, reproduction, forwarding to unauthorized people and/or third parties, and translation, including partial, without written authorization from Automobili Lamborghini S.p.A.

Main group		Subgroup		Subgroup		Title identification	
08	Body	**00**	Assemblies	**43**	Sliding door	**00**	Description
		01	Floor assembly - footrest	**45**	Window glass & weatherstrips	**01**	Check (control)
		02	Pedal cluster	**47**	Side windows	**02**	Adjustment
		03	Engine compartment panels	**53**	Side members	**03**	Disassemble
		04	Frame	**54**	Trim & protection strip inner	**04**	Cleaning
		05	Front end upholstery	**57**	Interior equipment	**05**	Assemble
		06	Front end bonnet with cd holder	**58**	Imperial roof accessories	**06**	Bleeding
		07	Bumper	**59**	Interior equipment	**07**	Fluids substitution
		09	VACS side spoilers	**60**	Optional equipment	**08**	Filling and topping up
		10	Side panel	**61**	Optional equipment	**09**	Overhaul
		11	External rear-view mirror	**62**	Optional equipment	**10**	Error code
		13	Rear end	**63**	Tunnel	**11**	Measurement block reading
		14	Rear end	**64**	Insulation and sound damping	**12**	Running-in
		15	Heater	**67**	Inner trim and licence plates	**13**	Adjustment coding
		16	Air conditioning, air filters	**68**	Inner trim	**14**	Diagnosis software
		17	Imperial roof, molding	**71**	con. Top		
		19	Aux. Heater & vent. System	**72**	con. Top		
		20	Body	**75**	Steering wheel		
		21	Front and back fender, wheel arch	**80**	Safety equipment pass. Side		
		23	Hood	**81**	Front seat		
		25	Floor bottoms	**82**	Front seat		
		27	Rear trunk, fan grille spoiler	**83**	External paintwork – Colour code		
		29	Tailgate and side gate	**84**	Blistering		
		31	Door-body plain, front	**87**	Control number		
		33	Door-body in white, rear	**90**	Reserved		
		37	Door & d. window parts front	**98**	Repair kit		
		39	Door & d. window part rear	**99**	Fizing with suspension		
		41	Wing door				

® Automobili Lamborghini S.p.A.
The information and procedures published below are strictly confidential and exclusively for the Lamborghini Dealer Network and Authorized Service Points. All copyrights are property of Automobili Lamborghini S.p.A based on copyright law. All of the PDF chapters in the WEB workshop manuals described below are based on information available at the time of publication. The company reserves the right to make updates and modifications. The following are prohibited: reprinting, reproduction, forwarding to unauthorized people and/or third parties, and translation, including partial, without written authorization from Automobili Lamborghini S.p.A.

Main group		Subgroup		Subgroup		Title identification	
09	Electrical equipment	**00**	Assemblies, wiring diagram	**60**	Cooling circuit fans	**00**	Description
		01	Electric drive	**62**	Electr. Central locking system	**01**	Check (control)
		03	Alternator	**63**	Electr. Parts (auxilliary heater)	**02**	Adjustment
		05	Ignition system, interf. Suppression	**65**	Electr. Parts water heating, cooling	**03**	Disassemble
		06	Electric parts, LIE	**70**	Module harnesses	**04**	Cleaning
		07	Engine control systems	**71**	Electric wiring	**05**	Assemble
		09	Control unit coded programming	**72**	Electric wiring	**06**	Bleeding
		10	Software	**73**	Electric wiring	**07**	Fluids substitution
		11	Starter	**74**	Linee elettriche	**08**	Filling and topping up
		15	Battery	**75**	Radio system, rear camera	**09**	Overhaul
		19	Side markers, front	**79**	Cable set single wiring	**10**	Error code
		20	Side markers, back	**80**	Safety equipment	**11**	Measurement block reading
		25	Electric dashboard accessories	**81**	Control units	**12**	Running-in
		27	Electric contacts (pedal cluster, transmission, brake)	**82**	TPMS	**13**	Adjustment coding
		37	Central electric	**90**	Control number	**14**	Diagnosis software
		41	Lighting devices: headlamp	**97**	Exchangeable control units		
		43	Lighting devices: licence plate light	**98**	Repair kit		
		45	Lighting devices: brake & taillight reflector	**99**	Fixing and suspension		
		47	Interior light				
		49	Parking lamp				
		51	Horn				
		53	Turn signal				
		55	Windshield wiper				
		56	Air bag control unit				
		57	Speedometer, speed regulator				
		58	ROB control unit -Rollbar				
		59	Electr. For ventilation, window lifter & seat adjust.				

® Automobili Lamborghini S.p.A.
The information and procedures published below are strictly confidential and exclusively for the Lamborghini Dealer Network and Authorized Service Points. All copyrights are property of Automobili Lamborghini S.p.A based on copyright law. All of the PDF chapters in the WEB workshop manuals described below are based on information available at the time of publication. The company reserves the right to make updates and modifications. The following are prohibited: reprinting, reproduction, forwarding to unauthorized people and/or third parties, and translation, including partial, without written authorization from Automobili Lamborghini S.p.A.

Main group		Subgroup		Title identification	
10	Diagnosis	**00**	Airbag	**00**	Description
		01	Engine	**01**	Check (control)
		02	Transmission	**02**	Adjustment
		03	ABS	**03**	Disassemble
		04	Shock Absorbers	**04**	Cleaning
		08	Air conditioning	**05**	Assemble
		09	ILM control unit	**06**	Bleeding
		16	SMLS control unit	**07**	Fluids substitution
		17	Instrument cluster	**08**	Filling and topping up
		33	GFA-LIE scan tool	**09**	Overhaul
		37	Navigation	**10**	Error code
		45	Volumetric antitheft and alarm interior monitoring	**11**	Measurement block reading or parameters
		46	ZKE	**12**	Running-in
		54	Spoiler	**13**	Adjustment coding
		56	Radio	**14**	Diagnosis software
		90	Information LaRa-AS		
		91	Information LDAS-32		

® Automobili Lamborghini S.p.A.
The information and procedures published below are strictly confidential and exclusively for the Lamborghini Dealer Network and Authorized Service Points. All copyrights are property of Automobili Lamborghini S.p.A based on copyright law. All of the PDF chapters in the WEB workshop manuals described below are based on information available at the time of publication. The company reserves the right to make updates and modifications. The following are prohibited: reprinting, reproduction, forwarding to unauthorized people and/or third parties, and translation, including partial, without written authorization from Automobili Lamborghini S.p.A.

Main group		Subgroup		Title identification	
70	Retrofit & Optional	**00**	General information	**00**	Description
	General information	**01**	Equipment	**01**	Check (control)
		02	Special tools	**02**	Adjustment
		03	Oils, grease, lubricants and liquids	**03**	Disassemble
		04	Engine	**04**	Cleaning
		05	Manual gearbox	**05**	Assemble
		06	E-gear	**06**	Bleeding
		07	Body	**07**	Fluids substitution
		08	Torque	**08**	Filling and topping up
		09	Electrical information	**09**	Overhaul
		10	Scrapping	**10**	Error code
		11	Car selflevelling kit	**11**	Measurement block reading or parameters
		12	Accessory kit	**12**	Running-in
		13	Serial number	**13**	Adjustment coding
		88	Check list	**14**	Diagnosis software
		89	PDI (pre-delivery checks)	**85**	1.5 miles (x 1000) - 2.5 Km (x 1000)
		90	Maintenance plan and frequency	**86**	7.5 miles (x 1000) - 12 Km (x 1000)
		91	Car general presentation	**87**	15 miles (x 1000) - 24 Km (x 1000)
				88	22.5 miles (x 1000) - 36 Km (x 1000)
				89	30 miles (x 1000) - 48 Km (x 1000)
				90	37.5 miles (x 1000) - 60 Km (x 1000)
				91	45 miles (x 1000) - 72 Km (x 1000)
				92	52.5 miles (x 1000) - 84 Km (x 1000)
				93	60 miles (x 1000) - 96 Km (x 1000)
				94	67.5 miles (x 1000) - 108 Km (x 1000)
				95	75 miles (x 1000) - 120 Km (x 1000)
				96	82.5 miles (x 1000) - 132 Km (x 1000)
				97	90 miles (x 1000) - 144 Km (x 1000)
				98	97.5 miles (x 1000) - 156 Km (x 1000)
				99	105 miles (x 1000) - 168 Km (x 1000)

® Automobili Lamborghini S.p.A.
The information and procedures published below are strictly confidential and exclusively for the Lamborghini Dealer Network and Authorized Service Points. All copyrights are property of Automobili Lamborghini S.p.A based on copyright law. All of the PDF chapters in the WEB workshop manuals described below are based on information available at the time of publication. The company reserves the right to make updates and modifications. The following are prohibited: reprinting, reproduction, forwarding to unauthorized people and/or third parties, and translation, including partial, without written authorization from Automobili Lamborghini S.p.A.

Main group		Subgroup		Title identification	
71	Retrofit & Optional	**00**	Assemblies	**00**	Description
	Engine	**01**	Auxiliary belt	**01**	Check (control)
		03	Crankcase, cylinder, cylinder head	**02**	Adjustment
		05	Crankshaft, connecting rods	**03**	Disassemble
		07	Pistons, rings, pins, liners	**04**	Cleaning
		09	Camshaft, valves	**05**	Assemble
		15	Oil pump	**06**	Bleeding
		16	Variable valve timing mechanism	**07**	Fluids substitution
		17	Oil cooler	**08**	Filling and topping up
		19	Air intercooler	**09**	Overhaul
		21	Water cooling	**10**	Error code
		22	Water pump	**11**	Measurement block reading or parameters
		27	Fuel pump & lines	**12**	Running-in
		28	Injection system	**13**	Adjustment coding
		29	Air intake manifold	**14**	Diagnosis software
		30	Oil filter		
		31	Catalyst		
		33	Intake air filter		
		41	Clutch / Flywheel		
		42	Automatic clutch (E-gear)		
		45	Turbocharger		
		90	Timing system		
		98	Repair kit		
		99	Fixing and suspension		

® Automobili Lamborghini S.p.A.
The information and procedures published below are strictly confidential and exclusively for the Lamborghini Dealer Network and Authorized Service Points. All copyrights are property of Automobili Lamborghini S.p.A based on copyright law. All of the PDF chapters in the WEB workshop manuals described below are based on information available at the time of publication. The company reserves the right to make updates and modifications. The following are prohibited: reprinting, reproduction, forwarding to unauthorized people and/or third parties, and translation, including partial, without written authorization from Automobili Lamborghini S.p.A.

Main group		Subgroup		Title identification	
72	Retrofit & Optional	**00**	Assemblies	**00**	Description
	Fuel tank, exhaust system, heating,	**01**	Fuel tank	**01**	Check (control)
	Climate system	**02**	Exhaust pressure control	**02**	Adjustment
		03	Fuel system parts	**03**	Disassemble
		09	Fuel cooling	**04**	Cleaning
		51	Exhaust system	**05**	Assemble
		53	Oxygen sensor	**06**	Bleeding
		54	Catalyst temperature sensor	**07**	Fluids substitution
		60	Air conditioning, engine parts (+ sensors)	**08**	Filling and topping up
		61	Auxilliary heater	**09**	Overhaul
		65	Geater	**10**	Error code
		90	Control number	**11**	Measurement block reading or parameters
		98	Repair kit	**12**	Running-in
		99	Fixing with suspension	**13**	Adjustment coding
				14	Diagnosis software

® Automobili Lamborghini S.p.A.
The information and procedures published below are strictly confidential and exclusively for the Lamborghini Dealer Network and Authorized Service Points. All copyrights are property of Automobili Lamborghini S.p.A based on copyright law. All of the PDF chapters in the WEB workshop manuals described below are based on information available at the time of publication. The company reserves the right to make updates and modifications. The following are prohibited: reprinting, reproduction, forwarding to unauthorized people and/or third parties, and translation, including partial, without written authorization from Automobili Lamborghini S.p.A.

Main group		Subgroup		Title identification	
73	Retrofit & Optional	**00**	Assemblies	**00**	Description
	Transmission	**01**	Transmission housing	**01**	Check (control)
		07	Gears & shafts	**02**	Adjustment
		08	Rods / Forks	**03**	Disassemble
		09	Selespeed sensor	**04**	Cleaning
		11	Synchroni. Gears	**05**	Assemble
		15	Oil pump	**06**	Bleeding
		17	Oil cooler	**07**	Fluids substitution
		21	Transmission housing e-gear	**08**	Filling and topping up
		23	Shifting / lever	**09**	Overhaul
		25	Automatic trans. control	**10**	Error code
		31	Disc sets	**11**	Measurement block reading or parameters
		41	Transfer case	**12**	Running-in
		90	Control number	**13**	Adjustment coding
		98	Repair kit	**14**	Diagnosis software
		99	Fixing with suspension		

® Automobili Lamborghini S.p.A.
The information and procedures published below are strictly confidential and exclusively for the Lamborghini Dealer Network and Authorized Service Points. All copyrights are property of Automobili Lamborghini S.p.A based on copyright law. All of the PDF chapters in the WEB workshop manuals described below are based on information available at the time of publication. The company reserves the right to make updates and modifications. The following are prohibited: reprinting, reproduction, forwarding to unauthorized people and/or third parties, and translation, including partial, without written authorization from Automobili Lamborghini S.p.A.

Main group		Subgroup		Title identification	
74	Retrofit & Optional	**00**	Assemblies	**00**	Description
	Front axle, steering	**01**	Front axle beam	**01**	Check (control)
		02	Viscous coupling	**02**	Adjustment
		03	Lifting system	**03**	Disassemble
		04	Wheel alignment	**04**	Cleaning
		07	Front wheel bearings and hubs	**05**	Assemble
		09	Front differential	**06**	Bleeding
		10	Anti-roll bar	**07**	Fluids substitution
		11	Front springs	**08**	Filling and topping up
		12	Suspension strut, front	**09**	Overhaul
		13	Shock absorbers	**10**	Error code
		19	Steering (rack)	**11**	Measurement block reading or parameters
		22	Power steering	**12**	Running-in
		23	Pump power steering	**13**	Adjustment coding
		25	Steering damper	**14**	Diagnosis software
		90	Control number		
		98	Repair kit		
		99	Fixing with suspension		

® Automobili Lamborghini S.p.A.
The information and procedures published below are strictly confidential and exclusively for the Lamborghini Dealer Network and Authorized Service Points. All copyrights are property of Automobili Lamborghini S.p.A based on copyright law. All of the PDF chapters in the WEB workshop manuals described below are based on information available at the time of publication. The company reserves the right to make updates and modifications. The following are prohibited: reprinting, reproduction, forwarding to unauthorized people and/or third parties, and translation, including partial, without written authorization from Automobili Lamborghini S.p.A.

Main group		Subgroup		Title identification	
75	Retrofit & Optional	**00**	Assemblies	**00**	Description
	Rear axle	**01**	Rear drive shaft	**01**	Check (control)
		04	Wheel alignment	**02**	Adjustment
		05	Rear axle carrier	**03**	Disassemble
		07	Rear wheel and rear hubs	**04**	Cleaning
		09	Rear differential	**05**	Assemble
		10	Anti-roll bar	**06**	Bleeding
		11	Rear springs	**07**	Fluids substitution
		12	Suspension strut, rear	**08**	Filling and topping up
		13	Shock absorber	**09**	Overhaul
		17	Differential gear manual gearbox	**10**	Error code
		19	Differential gear e-gear	**11**	Measurement block reading or parameters
		21	Propeller shaft (Gear - Front diff.)	**12**	Running-in
		23	Power steering pump	**13**	Adjustment coding
		25	.....	**14**	Diagnosis software
		90	Control number		
		98	Repair kit		
		99	Fixing with suspension		

® Automobili Lamborghini S.p.A.
The information and procedures published below are strictly confidential and exclusively for the Lamborghini Dealer Network and Authorized Service Points. All copyrights are property of Automobili Lamborghini S.p.A based on copyright law. All of the PDF chapters in the WEB workshop manuals described below are based on information available at the time of publication. The company reserves the right to make updates and modifications. The following are prohibited: reprinting, reproduction, forwarding to unauthorized people and/or third parties, and translation, including partial, without written authorization from Automobili Lamborghini S.p.A.

Main group		Subgroup		Title identification	
76	Retrofit & Optional	**00**	Assemblies	**00**	Description
	Wheels, Brakes	**01**	Disk, wheel, tires	**01**	Check (control)
		02	Parking brake	**02**	Adjustment
		07	Brakes, caliper	**03**	Disassemble
		09	Brakes, hydrl.	**04**	Cleaning
		11	Brake cylinder and circuits	**05**	Assemble
		12	Servo brake	**06**	Bleeding
		14	ABS and braking force adjusting system	**07**	Fluids substitution
		15	Disc brake & brake pad	**08**	Filling and topping up
		16	Self levelling system	**09**	Overhaul
		17	TCS-system	**10**	Error code
		18	ESP-system	**11**	Measurement block reading or parameters
		90	Control number	**12**	Running-in
		98	Repair kit	**13**	Adjustment coding
		99	Fixing with suspension	**14**	Diagnosis software

® Automobili Lamborghini S.p.A.
The information and procedures published below are strictly confidential and exclusively for the Lamborghini Dealer Network and Authorized Service Points. All copyrights are property of Automobili Lamborghini S.p.A based on copyright law. All of the PDF chapters in the WEB workshop manuals described below are based on information available at the time of publication. The company reserves the right to make updates and modifications. The following are prohibited: reprinting, reproduction, forwarding to unauthorized people and/or third parties, and translation, including partial, without written authorization from Automobili Lamborghini S.p.A.

Main group		Subgroup		Title identification	
77	Retrofit & Optional	**00**	Assemblies	**00**	Description
	Running gear / chassis	**01**	Running gear	**01**	Check (control)
		03	Frame accessory parts	**02**	Adjustment
		05	Running gear	**03**	Disassemble
		11	Hand lever control manual gearbox	**04**	Cleaning
		13	Lever control e-gear	**05**	Assemble
		21	Pedal cluster	**06**	Bleeding
		23	Pedal cluster e-gear	**07**	Fluids substitution
		77	Test	**08**	Filling and topping up
		90	Control number	**09**	Overhaul
		98	Repair kit	**10**	Error code
		99	Fixing with suspension	**11**	Measurement block reading or parameters
				12	Running-in
				13	Adjustment coding
				14	Diagnosis software

® Automobili Lamborghini S.p.A.
The information and procedures published below are strictly confidential and exclusively for the Lamborghini Dealer Network and Authorized Service Points. All copyrights are property of Automobili Lamborghini S.p.A based on copyright law. All of the PDF chapters in the WEB workshop manuals described below are based on information available at the time of publication. The company reserves the right to make updates and modifications. The following are prohibited: reprinting, reproduction, forwarding to unauthorized people and/or third parties, and translation, including partial, without written authorization from Automobili Lamborghini S.p.A.

Main group		Subgroup		Subgroup		Title identification	
78	Retrofit & Optional	00	Assemblies	43	Sliding door	00	Description
	Body	01	Floor assembly - footrest	45	Window glass & weatherstrips	01	Check (control)
		02	Pedal cluster	47	Side windows	02	Adjustment
		03	Engine compartment panels	53	Side members	03	Disassemble
		04	Frame	54	Trim & protection strip inner	04	Cleaning
		05	Front end upholstery	57	Interior equipment	05	Assemble
		06	Front end bonnet with cd holder	58	Imperial roof accessories	06	Bleeding
		07	Bumper	59	Interior equipment	07	Fluids substitution
		09	VACS side spoilers	60	Optional equipment	08	Filling and topping up
		10	Side panel	61	Optional equipment	09	Overhaul
		11	External rear-view mirror	62	Optional equipment	10	Error code
		13	Rear end	63	Tunnel	11	Measurement block reading
		14	Rear end	64	Insulation and sound damping	12	Running-in
		15	Heater	67	Inner trim and licence plates	13	Adjustment coding
		16	Air conditioning, air filters	68	Inner trim	14	Diagnosis software
		17	Imperial roof, molding	71	con. Top		
		19	Aux. Heater & vent. System	72	con. Top		
		20	Body	75	Steering wheel		
		21	Front and back fender, wheel arch	80	Safety equipment pass. Side		
		23	Hood	81	Front seat		
		25	Floor bottoms	82	Front seat		
		27	Rear trunk, fan grille spoiler	83	External paintwork – Colour code		
		29	Tailgate and side gate	84	Blistering		
		31	Door-body plain, front	87	Control number		
		33	Door-body in white, rear	90	Reserved		
		37	Door & d. window parts front	98	Repair kit		
		39	Door & d. window part rear	99	Fizing with suspension		
		41	Wing door				

® Automobili Lamborghini S.p.A.
The information and procedures published below are strictly confidential and exclusively for the Lamborghini Dealer Network and Authorized Service Points. All copyrights are property of Automobili Lamborghini S.p.A based on copyright law. All of the PDF chapters in the WEB workshop manuals described below are based on information available at the time of publication. The company reserves the right to make updates and modifications. The following are prohibited: reprinting, reproduction, forwarding to unauthorized people and/or third parties, and translation, including partial, without written authorization from Automobili Lamborghini S.p.A.

Main group		Subgroup		Subgroup		Title identification	
79	Retrofit & Optional	**00**	Assemblies, wiring diagram	**60**	Cooling circuit fans	**00**	Description
	Electrical equipment	**01**	Electric drive	**62**	Electr. Central locking system	**01**	Check (control)
		03	Alternator	**63**	Electr. Parts (auxilliary heater)	**02**	Adjustment
		05	Ignition system, interf. Suppression	**65**	Electr. Parts water heating, cooling	**03**	Disassemble
		06	Electric parts, LIE	**70**	Module harnesses	**04**	Cleaning
		07	Engine control systems	**71**	Electric wiring	**05**	Assemble
		09	Control unit coded programming	**72**	Electric wiring	**06**	Bleeding
		10	Software	**73**	Electric wiring	**07**	Fluids substitution
		11	Starter	**74**	Linee elettriche	**08**	Filling and topping up
		15	Battery	**75**	Radio system, rear camera	**09**	Overhaul
		19	Side markers, front	**79**	Cable set single wiring	**10**	Error code
		20	Side markers, back	**80**	Safety equipment	**11**	Measurement block reading
		25	Electric dashboard accessories	**81**	Control units	**12**	Running-in
		27	Electric contacts (pedal cluster, transmission, brake)	**82**	TPMS	**13**	Adjustment coding
		37	Central electric	**90**	Control number	**14**	Diagnosis software
		41	Lighting devices: headlamp	**97**	Exchangeable control units		
		43	Lighting devices: licence plate light	**98**	Repair kit		
		45	Lighting devices: brake & taillight reflector	**99**	Fixing and suspension		
		47	Interior light				
		49	Parking lamp				
		51	Horn				
		53	Turn signal				
		55	Windshield wiper				
		56	Air bag control unit				
		57	Speedometer, speed regulator				
		58	ROB control unit -Rollbar				
		59	Electr. For ventilation, window lifter & seat adjust.				

® Automobili Lamborghini S.p.A.
The information and procedures published below are strictly confidential and exclusively for the Lamborghini Dealer Network and Authorized Service Points. All copyrights are property of Automobili Lamborghini S.p.A based on copyright law. All of the PDF chapters in the WEB workshop manuals described below are based on information available at the time of publication. The company reserves the right to make updates and modifications. The following are prohibited: reprinting, reproduction, forwarding to unauthorized people and/or third parties, and translation, including partial, without written authorization from Automobili Lamborghini S.p.A.

Main group		Subgroup		Title identification	
80	Retrofit & Optional	**00**	Airbag	**00**	Description
	Diagnosis	**01**	Engine	**01**	Check (control)
		02	Transmission	**02**	Adjustment
		03	ABS	**03**	Disassemble
		04	Shock Absorbers	**04**	Cleaning
		08	Air conditioning	**05**	Assemble
		09	ILM control unit	**06**	Bleeding
		16	SMLS control unit	**07**	Fluids substitution
		17	Instrument cluster	**08**	Filling and topping up
		33	GFA-LIE scan tool	**09**	Overhaul
		37	Navigation	**10**	Error code
		45	Volumetric antitheft and alarm interior monitoring	**11**	Measurement block reading or parameters
		46	ZKE	**12**	Running-in
		54	Spoiler	**13**	Adjustment coding
		56	Radio	**14**	Diagnosis software
		90	Information LaRa-AS		
		91	Information LDAS-32		

® Automobili Lamborghini S.p.A.
The information and procedures published below are strictly confidential and exclusively for the Lamborghini Dealer Network and Authorized Service Points. All copyrights are property of Automobili Lamborghini S.p.A based on copyright law. All of the PDF chapters in the WEB workshop manuals described below are based on information available at the time of publication. The company reserves the right to make updates and modifications. The following are prohibited: reprinting, reproduction, forwarding to unauthorized people and/or third parties, and translation, including partial, without written authorization from Automobili Lamborghini S.p.A.

The technical concepts adopted in the design of this car must be accompanied by good knowledge of all the use and maintenance standards contained in this manual. To ensure the vehicle provides its top performance and to guarantee it is perfectly maintained (thereby exploiting its full value), strictly adhere to the use and maintenance standards contained herein.

Key to symbols

Lamborghini
This symbol indicates that the procedure described must be carried out at an Authorised Lamborghini Workshop

CAUTION!

Texts bearing this symbol contain information regarding safety and indicate potentially dangerous situations or aspects.

Important!
Texts bearing this symbol indicate a potential danger for the car and call attention to any damage the car may be subjected to.

Environment safeguards
Texts bearing this symbol contain environment safeguards

Note
Texts bearing this symbol contain additional information.

® Automobili Lamborghini S.p.A.
The information and procedures published below are strictly confidential and exclusively for the Lamborghini Dealer Network and Authorized Service Points. All copyrights are property of Automobili Lamborghini S.p.A based on copyright law. All of the PDF chapters in the WEB workshop manuals described below are based on information available at the time of publication. The company reserves the right to make updates and modifications. The following are prohibited: reprinting, reproduction, forwarding to unauthorized people and/or third parties, and translation, including partial, without written authorization from Automobili Lamborghini S.p.A.

Safety pictograms

A

A. Earmuffs must be worn
This symbol indicates that the operator must wear earmuffs due to the risk of noise pollution.

B

B. Gloves must be worn
This symbol indicates that the operator must wear heatproof safety gloves.

C

C. Protective eyewear must be worn
This symbol indicates that the operator must wear protective eyewear.

D

D. Mask must be worn
This symbol indicates that the operator must wear a safety mask.

E

E. Protective footwear must be worn
This symbol indicates that the operator must wear protective footwear.

F

F. Work overalls must be worn
This symbol indicates that the operator must wear work overalls.

® Automobili Lamborghini S.p.A.
The information and procedures published below are strictly confidential and exclusively for the Lamborghini Dealer Network and Authorized Service Points. All copyrights are property of Automobili Lamborghini S.p.A based on copyright law. All of the PDF chapters in the WEB workshop manuals described below are based on information available at the time of publication. The company reserves the right to make updates and modifications. The following are prohibited: reprinting, reproduction, forwarding to unauthorized people and/or third parties, and translation, including partial, without written authorization from Automobili Lamborghini S.p.A.

G. Danger of explosion
This symbol indicates that the operator must exercise the utmost care; when the battery is electrically charged, it produces explosive hydrogen gas which can cause personal injury.

G

H. Fire hazard
This symbol indicates that the operator must exercise the utmost care. Do not expose the battery to naked flames, electricity or direct light. Do not smoke and do not invert the battery polarity.

H

I. Toxic substance inhalation hazard
This symbol indicates that the operator must exercise the utmost care due to the risk of inhaling toxic substances.

I

L. Battery acid fume hazard
This symbol indicates that the operator must exercise the utmost care due to the presence of battery acid fumes. The battery contains sulphuric acid: always wear protective gloves and eyewear. Do not tilt the battery: acid may leak out of the ventilation apertures.
If the acid comes into direct contact with the skin or eyes, rinse with cold water for a few minutes and call a doctor.

L

M. Danger of hot surfaces
This symbol indicates that the operator must exercise the utmost care as regards any car component that may be extremely hot after the car has been used.

M

N. Danger of crushing upper or lower limbs
This symbol indicates that the operator must exercise the utmost care due to the presence of moving mechanical components. Careless or unexpected activation of these components could crush the operator's upper or lower limbs.

N

O. Dragging hazard
This symbol indicates that the operator must exercise the utmost care due to the presence of moving mechanical components. Careless or unexpected activation of these components could result in entanglement and subsequent dragging which could cause personal injury.

O

P. Danger of corrosive substances
This symbol indicates that the operator must exercise the utmost care due to the risk of corrosion.

P

® Automobili Lamborghini S.p.A.
The information and procedures published below are strictly confidential and exclusively for the Lamborghini Dealer Network and Authorized Service Points. All copyrights are property of Automobili Lamborghini S.p.A based on copyright law. All of the PDF chapters in the WEB workshop manuals described below are based on information available at the time of publication. The company reserves the right to make updates and modifications. The following are prohibited: reprinting, reproduction, forwarding to unauthorized people and/or third parties, and translation, including partial, without written authorization from Automobili Lamborghini S.p.A.

CAUTION!

Carry out all maintenance, adjustment or repair work with the utmost care to avoid any risk of serious injury.

- **Take special care while working on the vehicle. Follow the safety procedures provided. Be prudent and use your common sense. Never risk personal injury.**
- **If the required skills, tools and equipment are lacking, or you do not have access to a workshop capable of carrying out the procedures described in this manual, any necessary work must be carried out exclusively by a Lamborghini dealer or an Authorised Workshop.**
- **Always follow the work procedures. Always wear protective eyewear while working on the vehicle or handling acids. Always wear protective eyewear, gloves and clothes when working with toxic substances.**
- **Never work on the vehicle if you are feeling unwell. The probability of injuring yourself or third parties increases when you are feeling tired, unwell, or if you have taken medication or other substances which could compromise your level of attention.**
- **The work area must be adequately lit.**
  When working inside or under the vehicle, use portable safety lamps. Ensure the lamp is adequately protected. If the lamp accidentally breaks, the heated filament could cause fire or serious burns if it comes into contact with fuel or oil.
- **Never re-use worn out fixtures. Many fixtures are designed to be used just once and therefore cannot be re-used because no longer safe (danger of accidents and serious injury). For the sake of example, below is a list of some of the fixtures that cannot be re-used: nuts, bolts, washers, elastic rings and split pins. Always comply with the recommendations provided by this repair manual. Always replace worn fixtures with new devices (at the intervals indicated and during check-ups).**
- **Friction materials such as brake pads and clutch disks may contain asbestos fibres. Do not create dust by grinding, sanding or cleaning with compressed air. Avoid inhaling asbestos fibres and dust. If inhaled, asbestos can cause serious illness such as asbestosis, cancer and even death.**

® Automobili Lamborghini S.p.A.
The information and procedures published below are strictly confidential and exclusively for the Lamborghini Dealer Network and Authorized Service Points. All copyrights are property of Automobili Lamborghini S.p.A based on copyright law. All of the PDF chapters in the WEB workshop manuals described below are based on information available at the time of publication. The company reserves the right to make updates and modifications. The following are prohibited: reprinting, reproduction, forwarding to unauthorized people and/or third parties, and translation, including partial, without written authorization from Automobili Lamborghini S.p.A.

CAUTION!

- **Never approach or touch the radiator fan while the engine is running: its temperature is controlled independently and it can start up unexpectedly.**

- **Always tie back long hair. Do not wear ties, scarves, baggy clothes, necklaces or anything else that could become entangled with moving parts while working near machine tools or running engines. Hair, clothes or jewellery that become entangled in machinery or moving engine parts, such as belts or the radiator fan, can cause serious injury.**

- **Never wear any jewellery to avoid any danger of short circuits, or becoming entangled with machinery or being crushed by heavy components which could cause serious personal injury.**

- **Never work under a raised vehicle unless the vehicle is firmly secured on specific supports. Never stand the vehicle on leftover concrete blocks, perforated bricks or any other element that could crumble or collapse under heavy loads. Never work under a vehicle that is only raised on a jack. Never work under a vehicle while the engine is running.**

- **When working under a vehicle standing on the ground, always adopt special safety precautions. Ensure the floor is perfectly level. Always completely pull the handbrake.**
  Position the gearlever in the parking position "" or in neutral (manual gearbox).
  Block the wheels to ensure the vehicle does not move. Remove the ignition key. Disconnect the battery earth cable to ensure others cannot switch on the vehicle while you are working underneath it.

- **Never expose the air conditioner (A/C) to high temperatures (for example, naked flames). Excessive heat increases the pressure in the system and may even cause the system to catch fire.**

- **The air conditioner (A/C) contains a dangerous chemical coolant.**
  Any repair or maintenance work on the air conditioner may only be carried out by qualified personnel using suitable coolant recovery/recycling equipment.
  The aforesaid personnel shall observe the due safety precautions and must be perfectly aware of regulations governing the disposal of chemical coolants for cars.

- **Do not use sparks, matches or naked flames near the battery. If the leaked hydrogen gas were to catch fire, it would burn the gas contained in the cells and the battery would explode.**

® Automobili Lamborghini S.p.A.
The information and procedures published below are strictly confidential and exclusively for the Lamborghini Dealer Network and Authorized Service Points. All copyrights are property of Automobili Lamborghini S.p.A based on copyright law. All of the PDF chapters in the WEB workshop manuals described below are based on information available at the time of publication. The company reserves the right to make updates and modifications. The following are prohibited: reprinting, reproduction, forwarding to unauthorized people and/or third parties, and translation, including partial, without written authorization from Automobili Lamborghini S.p.A.

Notes

- Always consult a Lamborghini dealer before repairing any vehicle that may still be covered by the Lamborghini warranty.
- Unsuitable components, incorrect repairs or adjustments may seriously damage the vehicle and its systems. Repair to such damage may be extremely costly and may prejudice the vehicle warranty.
- Before carrying out any work, ensure all the necessary tools and components are available. Carefully read all the instructions and ensure you correctly understand the WARNINGS. Never improvise. Use tools suited to the work to be carried out. Use spare parts that conform to Lamborghini specifications. Avoid improvised tools, components and procedures which could compromise repairs.
- The components numbers mentioned in this manual are only provided as a reference. For any further information, contact the Lamborghini dealers' Spare Parts Department.

Hazards

Heat

The car includes components such as: the engine, brakes, cooling systems, etc. Any contact with these parts while the engine is running or immediately after the engine is switched off can cause burns. Therefore, ensure these components have cooled down before carrying out any maintenance/repair work (check the water temperature indicator by inserting the key in the ignition and turning just one step). In particular, never remove the radiator cap while the engine is hot. When hot, the radiator is pressurised and very hot water or vapour could escape and cause burns. If it is absolutely necessary to carry out work while the engine is hot, wear suitable heatproof protective gear and take the utmost care during the procedures. Do not park the vehicle near inflammable material when the engine is hot.

Hanging loads

During the various work stages, it may be necessary to raise the vehicle on a car-lift or lift components out of the car (e.g. the engine). During these procedures, take the utmost care to ensure correct stability before lifting completely. The same hazard applies during the removal of moveable parts (doors, hoods, etc.). Before removing any fixtures, ensure the component is secured to ensure it does not fall.

Obstacles

Ensure the work area is completely free of any obstacles; therefore place any unused tools or car components on the workbenches where they are not a danger to the operator.

® Automobili Lamborghini S.p.A.
The information and procedures published below are strictly confidential and exclusively for the Lamborghini Dealer Network and Authorized Service Points. All copyrights are property of Automobili Lamborghini S.p.A based on copyright law. All of the PDF chapters in the WEB workshop manuals described below are based on information available at the time of publication. The company reserves the right to make updates and modifications. The following are prohibited: reprinting, reproduction, forwarding to unauthorized people and/or third parties, and translation, including partial, without written authorization from Automobili Lamborghini S.p.A.

Slippery surfaces
Any fluids spilt in the work area must be completely cleaned up to avoid the creation of slippery surfaces.

Moving parts
Always take the utmost care while carrying out any work requiring contact with belts, gears, pulleys or fans where there is a high risk of being crushed or dragged. Wear appropriate clothing and do not wear loose objects which may become entangled. The cooling fans are activated automatically, therefore disconnect the battery (position the battery disconnect control on OFF) before carrying out any maintenance/repair work on the fans.

Brake dust
Do not blow the brake assembly with compressed air; toxic dust could be released into the air.

Fuel
Fuel is extremely inflammable. It is forbidden to approach fuel with: naked flames, hot surfaces, cigarettes and components that may produce sparks (e.g. electrical switches). In some situations, fuel can be explosive.

Carbon monoxide
Exhaust fumes contain carbon monoxide, a highly poisonous gas that can cause fainting, intoxication and death. If it is necessary to carry out work procedures while the engine is running in confined or partially confined areas, ensure the area is well ventilated and always use an exhaust gas scavenging system.

® Automobili Lamborghini S.p.A.
The information and procedures published below are strictly confidential and exclusively for the Lamborghini Dealer Network and Authorized Service Points. All copyrights are property of Automobili Lamborghini S.p.A based on copyright law. All of the PDF chapters in the WEB workshop manuals described below are based on information available at the time of publication. The company reserves the right to make updates and modifications. The following are prohibited: reprinting, reproduction, forwarding to unauthorized people and/or third parties, and translation, including partial, without written authorization from Automobili Lamborghini S.p.A.

Raising the car

With a hydraulic jack

To raise the car in an emergency situation, arrange the hydraulic jack in point (**A-Fig.1**).

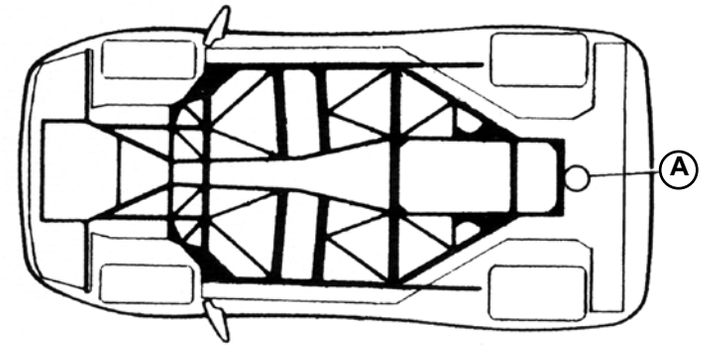

Fig.1

CAUTION!

Placing the jack in positions other than the position illustrated may damage the car and endanger the operator. Ensure the car is parked on a flat surface, that the gear lever is in first gear and that the handbrake is pulled.

With a bridge

If a bridge is available, position the support arms near the support surfaces (**B-Fig.2**).

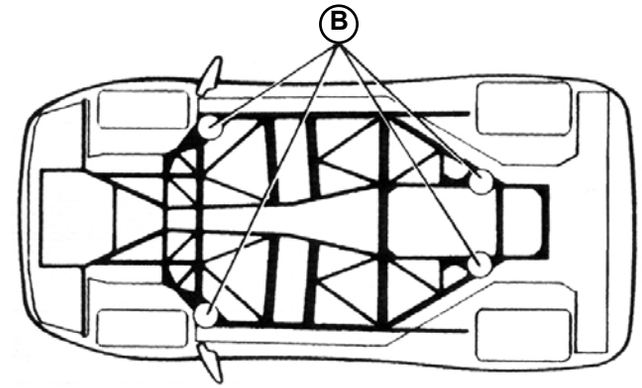

Fig.2

STOP **Only use the support surfaces because the car flatbed is made of panels that may be damaged.**

® Automobili Lamborghini S.p.A.
The information and procedures published below are strictly confidential and exclusively for the Lamborghini Dealer Network and Authorized Service Points. All copyrights are property of Automobili Lamborghini S.p.A based on copyright law. All of the PDF chapters in the WEB workshop manuals described below are based on information available at the time of publication. The company reserves the right to make updates and modifications. The following are prohibited: reprinting, reproduction, forwarding to unauthorized people and/or third parties, and translation, including partial, without written authorization from Automobili Lamborghini S.p.A.

Airbag unit replacement after an accident

Warning:
- **The airbag ECU can be used for a maximum of three side airbag and/or pretensioner deployments.**
- **After the third deployment, the “ECU fault” message appears.**

The airbag ECU must be replaced:
- if the driver/passenger side airbag is deployed
- after the side airbag has been deployed three times
- if the wrapping is damaged
- if there is a deformation of the tunnel within 200 mm of the ECU

Replace the following:
- all of the deployed airbags

Furthermore, if the passenger airbag was deployed, replace:
- airbag ECU
- dashboard
- deformed supports of driver side module (they must not be straightened)

Furthermore, if the driver side airbag was deployed, replace:
- airbag ECU
- pigtail connection

Furthermore, if the side airbags were deployed, replace:
- side impact sensor

Also replace:
- all of the seatbelts with deployed pretensioners

Furthermore, if the airbag ECU was activated:
- connect the diagnosis tool and check that there are no errors (fault codes) in the airbag system. If so, reset them.

® Automobili Lamborghini S.p.A.
The information and procedures published below are strictly confidential and exclusively for the Lamborghini Dealer Network and Authorized Service Points. All copyrights are property of Automobili Lamborghini S.p.A based on copyright law. All of the PDF chapters in the WEB workshop manuals described below are based on information available at the time of publication. The company reserves the right to make updates and modifications. The following are prohibited: reprinting, reproduction, forwarding to unauthorized people and/or third parties, and translation, including partial, without written authorization from Automobili Lamborghini S.p.A.

Recommendations for the operator

If a customer asks you to carry out repairs due to problems he or she has encountered, try to gather as many details as possible about the symptoms. Make this task easier for the customer by asking specific questions about the problem, this will help you to make a prompt diagnosis.

Once you have gathered all the information you need, test the problem yourself to confirm.

Schedule repairs rationally to avoid wasting time: organise your work area, prepare any tools and spare parts.

Only work on parts considered essential to the job. To do this, use the indications in this manual as a guideline. This workshop manual aims to provide a fundamental theoretical basis, which will allow you to work in a rational manner. However, this must be integrated with a sound basic training in mechanics/electronics and Lamborghini training courses.

During repairs always use: top quality tools, certified personal protection devices and the special equipment provided by Lamborghini where expressly required.

While carrying our any work, tools must be kept within easy reach, if possible on specifically designed work surfaces and never on top of or inside the car.

When removing small parts or details, always store in a place where they are protected and easy to find. Always mark parts and their position if they need to be reassembled in a certain order.

During re-assembly, always replace gaskets, seals and split pins with new parts.

During re-assembly, beware of parts requiring particular tightening torques (**000800**).

Always and only use Lamborghini original spare parts.

® Automobili Lamborghini S.p.A.
The information and procedures published below are strictly confidential and exclusively for the Lamborghini Dealer Network and Authorized Service Points. All copyrights are property of Automobili Lamborghini S.p.A based on copyright law. All of the PDF chapters in the WEB workshop manuals described below are based on information available at the time of publication. The company reserves the right to make updates and modifications. The following are prohibited: reprinting, reproduction, forwarding to unauthorized people and/or third parties, and translation, including partial, without written authorization from Automobili Lamborghini S.p.A.

EQUIPMENT SPECIAL TOOLS
(Lamborghini closet)

drawer 1

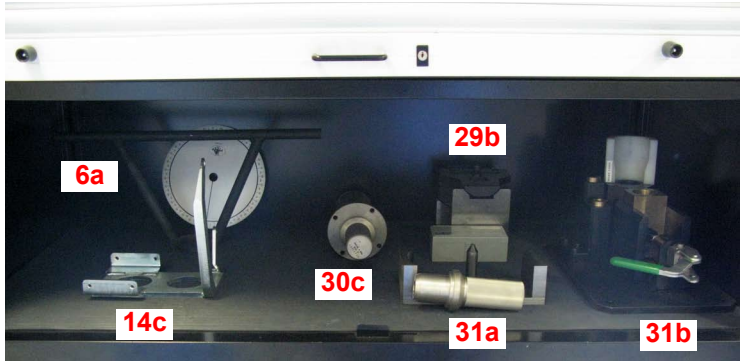

drawer 9

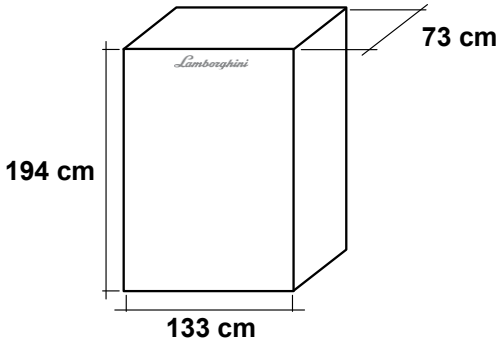

Diablo - drawer 10

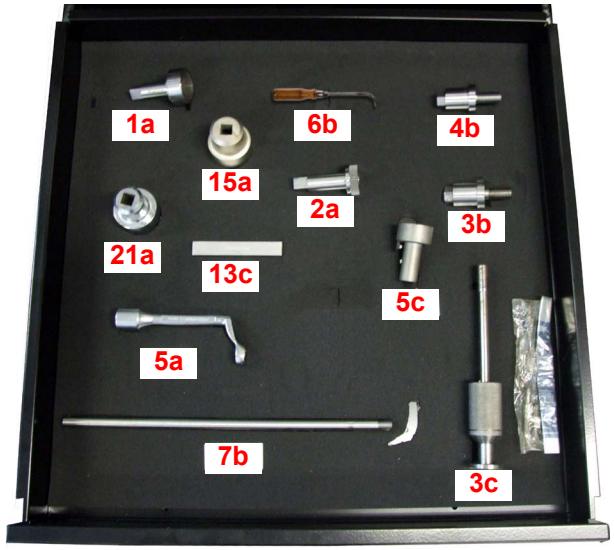

Diablo - drawer 11

® Automobili Lamborghini S.p.A.
The information and procedures published below are strictly confidential and exclusively for the Lamborghini Dealer Network and Authorized Service Points. All copyrights are property of Automobili Lamborghini S.p.A based on copyright law. All of the PDF chapters in the WEB workshop manuals described below are based on information available at the time of publication. The company reserves the right to make updates and modifications. The following are prohibited: reprinting, reproduction, forwarding to unauthorized people and/or third parties, and translation, including partial, without written authorization from Automobili Lamborghini S.p.A.

Murcielago - drawer 12

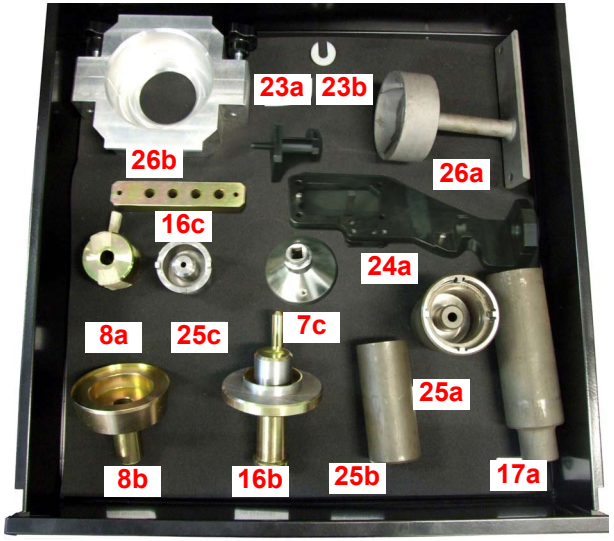

Murcielago - drawer 13

Gallardo - drawer 6

Gallardo drawer 14

Gallardo - drawer 15

® Automobili Lamborghini S.p.A.
The information and procedures published below are strictly confidential and exclusively for the Lamborghini Dealer Network and Authorized Service Points. All copyrights are property of Automobili Lamborghini S.p.A based on copyright law. All of the PDF chapters in the WEB workshop manuals described below are based on information available at the time of publication. The company reserves the right to make updates and modifications. The following are prohibited: reprinting, reproduction, forwarding to unauthorized people and/or third parties, and translation, including partial, without written authorization from Automobili Lamborghini S.p.A.

Front differential - drawer 3

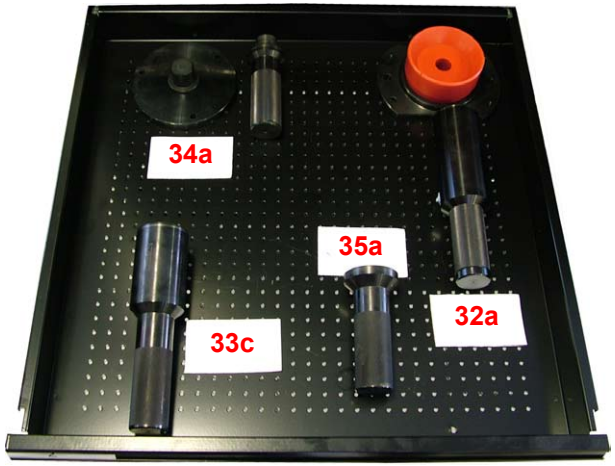

Running gear - drawer 4

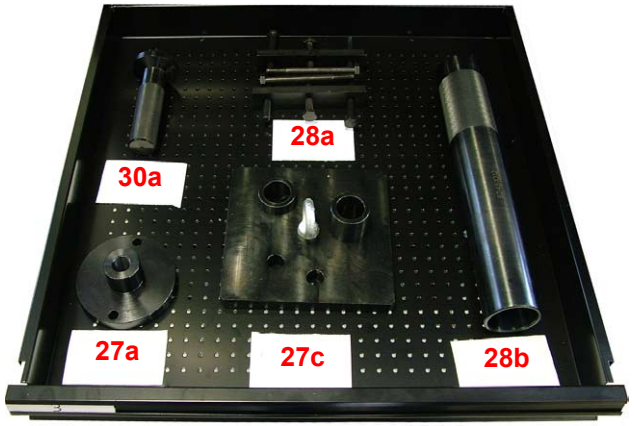

Front differential - drawer 7

Drawer 8

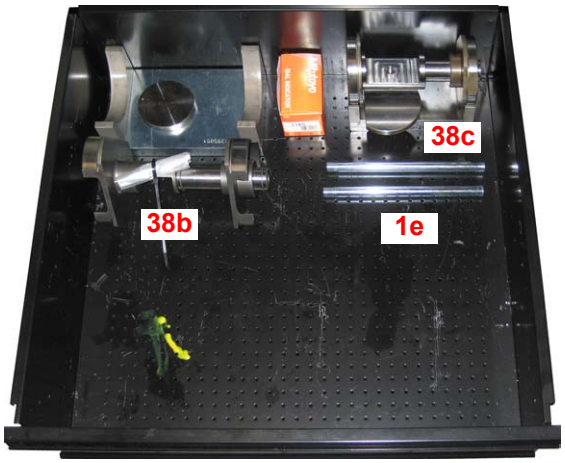

Running gear - drawer 5

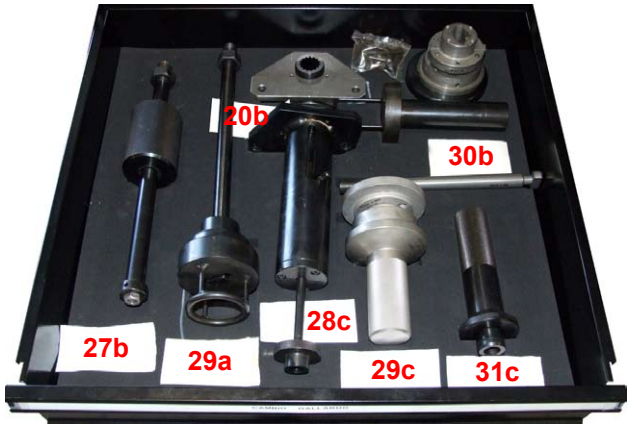

® Automobili Lamborghini S.p.A.
The information and procedures published below are strictly confidential and exclusively for the Lamborghini Dealer Network and Authorized Service Points. All copyrights are property of Automobili Lamborghini S.p.A based on copyright law. All of the PDF chapters in the WEB workshop manuals described below are based on information available at the time of publication. The company reserves the right to make updates and modifications. The following are prohibited: reprinting, reproduction, forwarding to unauthorized people and/or third parties, and translation, including partial, without written authorization from Automobili Lamborghini S.p.A.

Gallardo Spyder

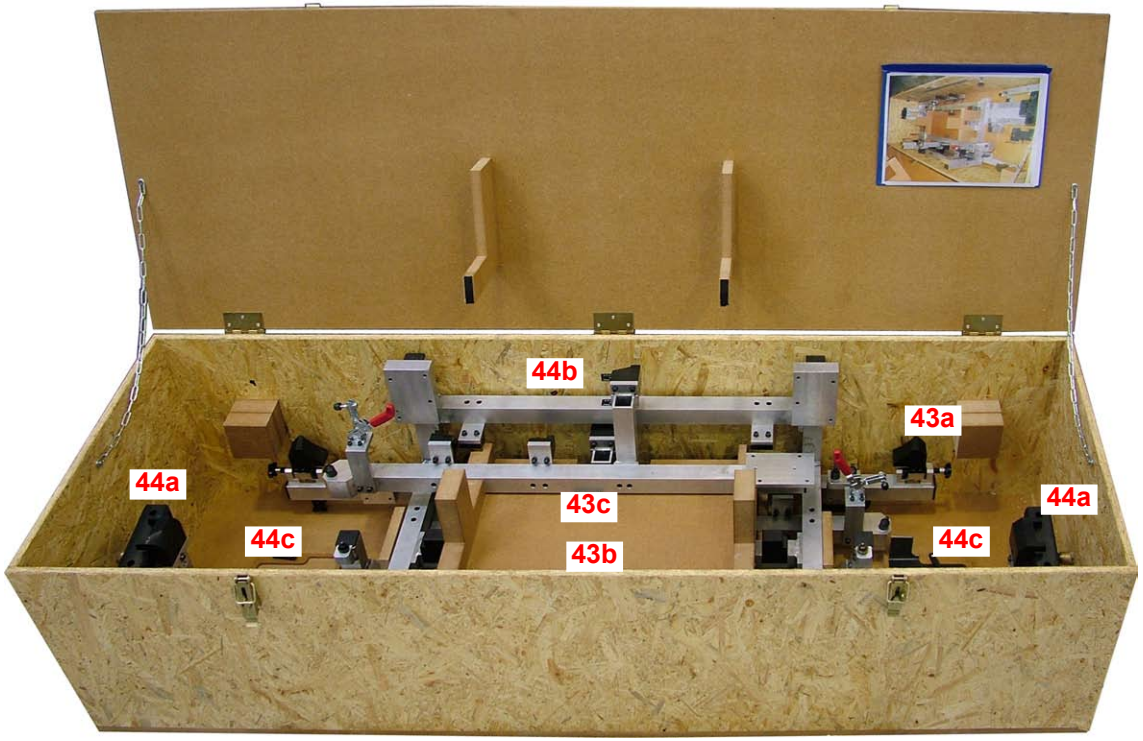

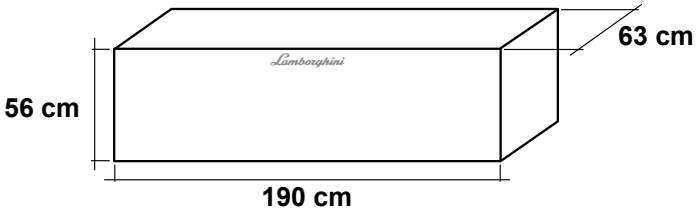

® Automobili Lamborghini S.p.A.
The information and procedures published below are strictly confidential and exclusively for the Lamborghini Dealer Network and Authorized Service Points. All copyrights are property of Automobili Lamborghini S.p.A based on copyright law. All of the PDF chapters in the WEB workshop manuals described below are based on information available at the time of publication. The company reserves the right to make updates and modifications. The following are prohibited: reprinting, reproduction, forwarding to unauthorized people and/or third parties, and translation, including partial, without written authorization from Automobili Lamborghini S.p.A.

Tools Engine

D= Diablo M= Murcielago G= Gallardo

	Code	Description	D	M	G			Photo
1a	961295014	L 507 V4 Valve adjustment tool **Closet 1** **Drawer 10** **Position 1a**	●					
1b	009007087	Carburation Check Tool **Out of the closed**	●					
1c	961595002	Oil pump oil seal installation tool **Out of the closed**	●					

® Automobili Lamborghini S.p.A.
The information and procedures published below are strictly confidential and exclusively for the Lamborghini Dealer Network and Authorized Service Points. All copyrights are property of Automobili Lamborghini S.p.A based on copyright law. All of the PDF chapters in the WEB workshop manuals described below are based on information available at the time of publication. The company reserves the right to make updates and modifications. The following are prohibited: reprinting, reproduction, forwarding to unauthorized people and/or third parties, and translation, including partial, without written authorization from Automobili Lamborghini S.p.A.

	Code	Description	D	M	G			Photo
1d	65195098	Torx T80 wrench **Out of the closet**			●			
1e	65395009	Wheel centering pin **Closet 1** **Drawer 8** **Position 1e**		●	●			
1f	62495152	Engine lifting tool **Out of the closet**		●	●			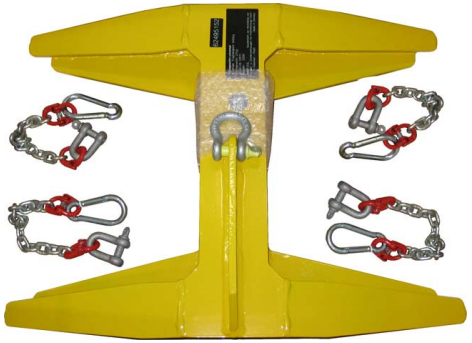

® Automobili Lamborghini S.p.A.
The information and procedures published below are strictly confidential and exclusively for the Lamborghini Dealer Network and Authorized Service Points. All copyrights are property of Automobili Lamborghini S.p.A based on copyright law. All of the PDF chapters in the WEB workshop manuals described below are based on information available at the time of publication. The company reserves the right to make updates and modifications. The following are prohibited: reprinting, reproduction, forwarding to unauthorized people and/or third parties, and translation, including partial, without written authorization from Automobili Lamborghini S.p.A.

	Code	Description	D	M	G			Photo
2a	961295015	Jalpa valve adjustment tool **Closet 1** **Drawer 10** **Position 2a**	●					
2b	961195002	Oil pump oil seal installation tool **Out of the closed**	●					
2c	961295035	Wrench for gear tooth coupling **Closet 1** **Drawer 11** **Position 2c**	●					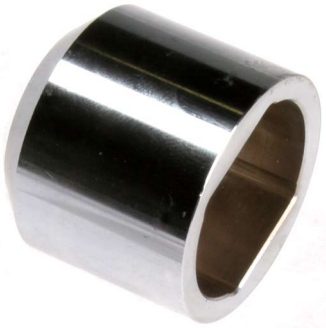

® Automobili Lamborghini S.p.A.
The information and procedures published below are strictly confidential and exclusively for the Lamborghini Dealer Network and Authorized Service Points. All copyrights are property of Automobili Lamborghini S.p.A based on copyright law. All of the PDF chapters in the WEB workshop manuals described below are based on information available at the time of publication. The company reserves the right to make updates and modifications. The following are prohibited: reprinting, reproduction, forwarding to unauthorized people and/or third parties, and translation, including partial, without written authorization from Automobili Lamborghini S.p.A.

	Code	Description	D	M	G			Photo
3a	961295038	Phase variator wrench **Closet 1** **Drawer 11** **Position 3a**	●					
3b	961195023	Camshaft gear locking tool **Closet 1** **Drawer 10** **Position 3b**	●					
3c	961195024	Camshaft Dowel Extractor **Closet 1** **Drawer 10** **Position 3c**	●					

® Automobili Lamborghini S.p.A.
The information and procedures published below are strictly confidential and exclusively for the Lamborghini Dealer Network and Authorized Service Points. All copyrights are property of Automobili Lamborghini S.p.A based on copyright law. All of the PDF chapters in the WEB workshop manuals described below are based on information available at the time of publication. The company reserves the right to make updates and modifications. The following are prohibited: reprinting, reproduction, forwarding to unauthorized people and/or third parties, and translation, including partial, without written authorization from Automobili Lamborghini S.p.A.

	Code	Description	D	M	G			Photo
4a	962095003	Idle Speed Adjustment Wrench **Closet 1** **Drawer 11** **Position 4a**	●					
4b	961195042	Camshaft gear locking tool **Closet 1** **Drawer 10** **Position 4b**	●					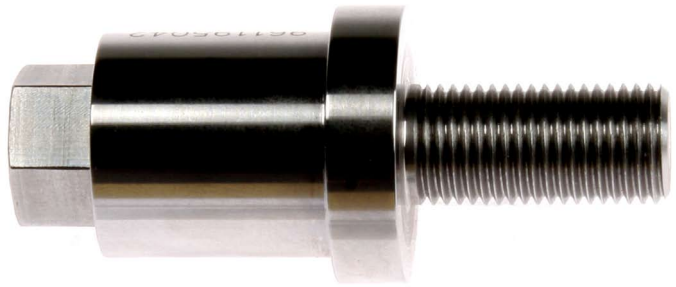
4c	961695013	TDC brush positioning jig **Closet 1** **Drawer 13** **Position 4c**	●	●				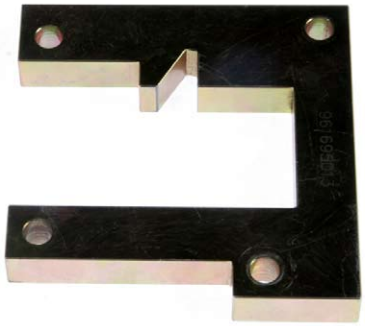

® Automobili Lamborghini S.p.A.
The information and procedures published below are strictly confidential and exclusively for the Lamborghini Dealer Network and Authorized Service Points. All copyrights are property of Automobili Lamborghini S.p.A based on copyright law. All of the PDF chapters in the WEB workshop manuals described below are based on information available at the time of publication. The company reserves the right to make updates and modifications. The following are prohibited: reprinting, reproduction, forwarding to unauthorized people and/or third parties, and translation, including partial, without written authorization from Automobili Lamborghini S.p.A.

	Code	Description	D	M	G			Photo
5a	009008019	Wrench for cylinder head tightening **Closet 1** **Drawer 10** **Position 5a**	●	●				
5b	961195026	Base for dial gauge **Closet 1** **Drawer 11** **Position 5b**	●	●				
5c	961195027	Liner stop **Closet 1** **Drawer 10** **Position 5c**	●	●				

® Automobili Lamborghini S.p.A.
The information and procedures published below are strictly confidential and exclusively for the Lamborghini Dealer Network and Authorized Service Points. All copyrights are property of Automobili Lamborghini S.p.A based on copyright law. All of the PDF chapters in the WEB workshop manuals described below are based on information available at the time of publication. The company reserves the right to make updates and modifications. The following are prohibited: reprinting, reproduction, forwarding to unauthorized people and/or third parties, and translation, including partial, without written authorization from Automobili Lamborghini S.p.A.

	Code	Description	D	M	G			Photo
6a	961495012	Crankshaft turning tool **Out of the closet**	●	●				
6b	961195014	L 507 V4 Valve adjustment tool **Closet 1** **Drawer 10** **Position 6b**	●	●				
6c	961495016	Crankshaft support, timing side **Closet 1** **Drawer 11** **Position 6c**	●	●				

® Automobili Lamborghini S.p.A.
The information and procedures published below are strictly confidential and exclusively for the Lamborghini Dealer Network and Authorized Service Points. All copyrights are property of Automobili Lamborghini S.p.A based on copyright law. All of the PDF chapters in the WEB workshop manuals described below are based on information available at the time of publication. The company reserves the right to make updates and modifications. The following are prohibited: reprinting, reproduction, forwarding to unauthorized people and/or third parties, and translation, including partial, without written authorization from Automobili Lamborghini S.p.A.

	Code	Description	D	M	G			Photo
7a	961495014	Crankshaft support, flywheel side **Closet 1** **Drawer 11** **Position 7a**	●	●				
7b	961195025	Dial Gauge Guide **Closet 1** **Drawer 10** **Position 7b**	●	●				
7c	61295043	Phase transformer tightening tool **Closet 1** **Drawer 12** **Position 7c**		●				

® Automobili Lamborghini S.p.A.
The information and procedures published below are strictly confidential and exclusively for the Lamborghini Dealer Network and Authorized Service Points. All copyrights are property of Automobili Lamborghini S.p.A based on copyright law. All of the PDF chapters in the WEB workshop manuals described below are based on information available at the time of publication. The company reserves the right to make updates and modifications. The following are prohibited: reprinting, reproduction, forwarding to unauthorized people and/or third parties, and translation, including partial, without written authorization from Automobili Lamborghini S.p.A.

	Code	Description	D	M	G			Photo
8a	61495032	Installer for crankshaft seal **Closet 1** **Drawer 12** **Position 8a**		●				
8b	961495027	Crankshaft oil seal connection **Closet 1** **Drawer 12** **Position 8b**		●				
8c	62495107	Power train lifting tool **Out of the closet**			●			

® Automobili Lamborghini S.p.A.
The information and procedures published below are strictly confidential and exclusively for the Lamborghini Dealer Network and Authorized Service Points. All copyrights are property of Automobili Lamborghini S.p.A based on copyright law. All of the PDF chapters in the WEB workshop manuals described below are based on information available at the time of publication. The company reserves the right to make updates and modifications. The following are prohibited: reprinting, reproduction, forwarding to unauthorized people and/or third parties, and translation, including partial, without written authorization from Automobili Lamborghini S.p.A.

	Code	Description	D	M	G			Photo
9a	61395023	timing box oil seal driver **Closet 1** **Drawer 14** **Position 9a**			●			
9b	61495040	Crankshaft oil seal driver **Closet 1** **Drawer 14** **Position 9b**			●			
9c	61595015	Oil temperature sensor bulb tightener **Closet 1** **Drawer 14** **Position 9c**			●			

® Automobili Lamborghini S.p.A.
The information and procedures published below are strictly confidential and exclusively for the Lamborghini Dealer Network and Authorized Service Points. All copyrights are property of Automobili Lamborghini S.p.A based on copyright law. All of the PDF chapters in the WEB workshop manuals described below are based on information available at the time of publication. The company reserves the right to make updates and modifications. The following are prohibited: reprinting, reproduction, forwarding to unauthorized people and/or third parties, and translation, including partial, without written authorization from Automobili Lamborghini S.p.A.

	Code	Description	D	M	G			Photo
10a	61495035	Manual rotation tool **Closet 1** **Drawer 14** **Position 10a**			●			
10b	61495036	Manual rotation tool **Closet 1** **Drawer 14** **Position 10b**			●			
10c	61495037	Mechanical phase tool **Closet 1** **Drawer 14** **Position 10c**			●			

® Automobili Lamborghini S.p.A.
The information and procedures published below are strictly confidential and exclusively for the Lamborghini Dealer Network and Authorized Service Points. All copyrights are property of Automobili Lamborghini S.p.A based on copyright law. All of the PDF chapters in the WEB workshop manuals described below are based on information available at the time of publication. The company reserves the right to make updates and modifications. The following are prohibited: reprinting, reproduction, forwarding to unauthorized people and/or third parties, and translation, including partial, without written authorization from Automobili Lamborghini S.p.A.

	Code	Description	D	M	G			Photo
11a	61495038	Bearing pad **Closet 1** **Drawer 14** **Position 11a**			●			
11b	61595014	Oil filter wrench **Closet 1** **Drawer 14** **Position 11b**			●			
11c	61195056	Mechanical phase tool **Closet 1** **Drawer 14** **Position 11c**			●			

® Automobili Lamborghini S.p.A.
The information and procedures published below are strictly confidential and exclusively for the Lamborghini Dealer Network and Authorized Service Points. All copyrights are property of Automobili Lamborghini S.p.A based on copyright law. All of the PDF chapters in the WEB workshop manuals described below are based on information available at the time of publication. The company reserves the right to make updates and modifications. The following are prohibited: reprinting, reproduction, forwarding to unauthorized people and/or third parties, and translation, including partial, without written authorization from Automobili Lamborghini S.p.A.

	Code	Description	D	M	G			Photo
12a	61195058	Head screws tightening wrench **Closet 1** **Drawer 14** **Position 12a**			●			
12b	009004399	Wheel ring nut **Out of the closet**	●	●				
12c	61195071 61195072	Special LH head timing tool (**A**) Special RH head timing tool (**B**) **Closet 1** **Drawer 13** **Position 12c**		●				

® Automobili Lamborghini S.p.A.
The information and procedures published below are strictly confidential and exclusively for the Lamborghini Dealer Network and Authorized Service Points. All copyrights are property of Automobili Lamborghini S.p.A based on copyright law. All of the PDF chapters in the WEB workshop manuals described below are based on information available at the time of publication. The company reserves the right to make updates and modifications. The following are prohibited: reprinting, reproduction, forwarding to unauthorized people and/or third parties, and translation, including partial, without written authorization from Automobili Lamborghini S.p.A.

Transmission

D= Diablo M= Murcielago G= Gallardo

	Code	Description	D	M	G			Photo
13a	962195007	Clutch centring tool **Closet 1** **Drawer 11** **Position 13a**	●					
13b	962495019	Gearbox cover mock-up block **Closet 1** **Drawer 11** **Position 13b**	●					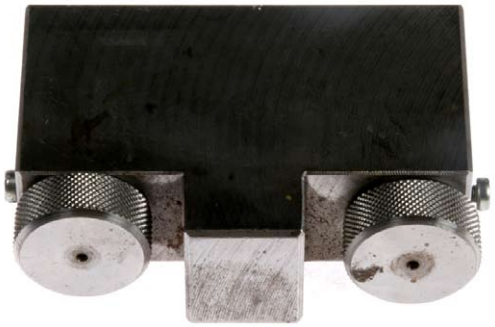
13c	962495032	Gearbox ratchet adjustment gauge **Closet 1** **Drawer 10** **Position 13c**	●					

® Automobili Lamborghini S.p.A.
The information and procedures published below are strictly confidential and exclusively for the Lamborghini Dealer Network and Authorized Service Points. All copyrights are property of Automobili Lamborghini S.p.A based on copyright law. All of the PDF chapters in the WEB workshop manuals described below are based on information available at the time of publication. The company reserves the right to make updates and modifications. The following are prohibited: reprinting, reproduction, forwarding to unauthorized people and/or third parties, and translation, including partial, without written authorization from Automobili Lamborghini S.p.A.

	Code	Description	D	M	G			Photo
14a	962495037	Propeller shaft ring nut wrench **Closet 1** **Drawer 11** **Position 14a**	●					
14b	962495038	Viscous coupling ring nut wrench **Closet 1** **Drawer 11** **Position 14b**	●					
14c	962495063	Shift lever adjustment tool **Closet 1** **Drawer 1** **Position 14c**	●					

® Automobili Lamborghini S.p.A.
The information and procedures published below are strictly confidential and exclusively for the Lamborghini Dealer Network and Authorized Service Points. All copyrights are property of Automobili Lamborghini S.p.A based on copyright law. All of the PDF chapters in the WEB workshop manuals described below are based on information available at the time of publication. The company reserves the right to make updates and modifications. The following are prohibited: reprinting, reproduction, forwarding to unauthorized people and/or third parties, and translation, including partial, without written authorization from Automobili Lamborghini S.p.A.

	Code	Description	D	M	G			Photo
15a	962495025	Ring nut wrench **Closet 1** **Drawer 10** **Position 15a**	●					
15b	62495074	Gear shat ring nut wrench **Closet 1** **Drawer 13** **Position 15b**		●				
15c	62495071	Transmission shift lever bracket **Closet 1** **Drawer 13** **Position 15c**		●				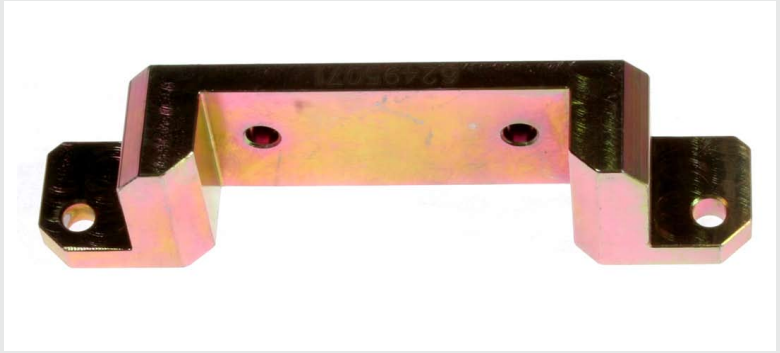

® Automobili Lamborghini S.p.A.
The information and procedures published below are strictly confidential and exclusively for the Lamborghini Dealer Network and Authorized Service Points. All copyrights are property of Automobili Lamborghini S.p.A based on copyright law. All of the PDF chapters in the WEB workshop manuals described below are based on information available at the time of publication. The company reserves the right to make updates and modifications. The following are prohibited: reprinting, reproduction, forwarding to unauthorized people and/or third parties, and translation, including partial, without written authorization from Automobili Lamborghini S.p.A.

	Code	Description	D	M	G			Photo
16a	62495081	Jig and buffer for bushing insertion **Closet 1** **Drawer 13** **Position 16a**		●				
16b	62495082	Gearbox bearing installer **Closet 1** **Drawer 12** **Position 16b**		●				
16c	62495085	Jig for pushing springs onto rods **Closet 1** **Drawer 12** **Position 16c**		●				

® Automobili Lamborghini S.p.A.
The information and procedures published below are strictly confidential and exclusively for the Lamborghini Dealer Network and Authorized Service Points. All copyrights are property of Automobili Lamborghini S.p.A based on copyright law. All of the PDF chapters in the WEB workshop manuals described below are based on information available at the time of publication. The company reserves the right to make updates and modifications. The following are prohibited: reprinting, reproduction, forwarding to unauthorized people and/or third parties, and translation, including partial, without written authorization from Automobili Lamborghini S.p.A.

	Code	Description	D	M	G			Photo
17a	62495086	Countershaft ring nut tightener **Closet 1** **Drawer 12** **Position 17a**		●				
17b	62495082	Installer for gearbox bearings (Manual gearbox) **Closet 1** **Drawer 13** **Position 17b**		●				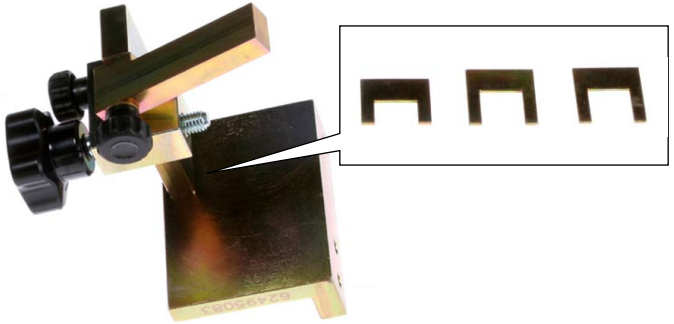
17c	62495103	Installer for gearbox bearings (E-gear gearbox) **Closet 1** **Drawer 13** **Position 17c**		●				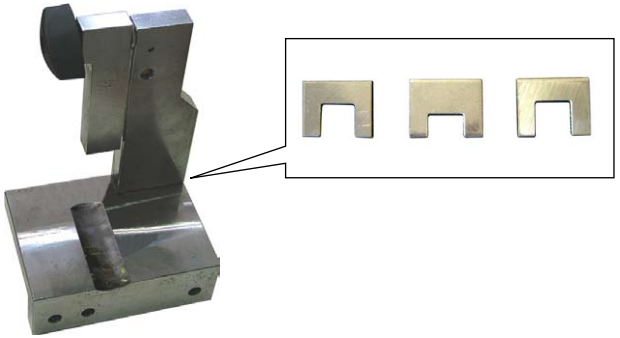

® Automobili Lamborghini S.p.A.
The information and procedures published below are strictly confidential and exclusively for the Lamborghini Dealer Network and Authorized Service Points. All copyrights are property of Automobili Lamborghini S.p.A based on copyright law. All of the PDF chapters in the WEB workshop manuals described below are based on information available at the time of publication. The company reserves the right to make updates and modifications. The following are prohibited: reprinting, reproduction, forwarding to unauthorized people and/or third parties, and translation, including partial, without written authorization from Automobili Lamborghini S.p.A.

	Code	Description	D	M	G			Photo
18a	62451002	Ring nut wrench **Closet 1** **Drawer 15** **Position 18a**			●			
18b	62451003	Ring nut wrench **Closet 1** **Drawer 15** **Position 18b**			●			
18c	62451004	Ring nut wrench **Closet 1** **Drawer 15** **Position 18c**			●			

® Automobili Lamborghini S.p.A.
The information and procedures published below are strictly confidential and exclusively for the Lamborghini Dealer Network and Authorized Service Points. All copyrights are property of Automobili Lamborghini S.p.A based on copyright law. All of the PDF chapters in the WEB workshop manuals described below are based on information available at the time of publication. The company reserves the right to make updates and modifications. The following are prohibited: reprinting, reproduction, forwarding to unauthorized people and/or third parties, and translation, including partial, without written authorization from Automobili Lamborghini S.p.A.

	Code	Description	D	M	G			Photo
19a	62451005	Gasket punch **Closet 1** **Drawer 15** **Position 19a**			●			
19b	62451006	Clearance gauge **Closet 1** **Drawer 15** **Position 19b**			●			
19c	62195015	Clutch aligning tool **Closet 1** **Drawer 14** **Position 19c**			●			

® Automobili Lamborghini S.p.A.
The information and procedures published below are strictly confidential and exclusively for the Lamborghini Dealer Network and Authorized Service Points. All copyrights are property of Automobili Lamborghini S.p.A based on copyright law. All of the PDF chapters in the WEB workshop manuals described below are based on information available at the time of publication. The company reserves the right to make updates and modifications. The following are prohibited: reprinting, reproduction, forwarding to unauthorized people and/or third parties, and translation, including partial, without written authorization from Automobili Lamborghini S.p.A.

	Code	Description	D	M	G			Photo
20a	62451001	Pinion ring nut flange **Closet 1** **Drawer 15** **Position 20a**			●			
20b	62451015	Reaction tool **Closet 1** **Drawer 5** **Position 20b**			●			
20c	62395115	Tool for testing the pinion Positioning **Closet 1** **Drawer 6** **Position 20c**			●			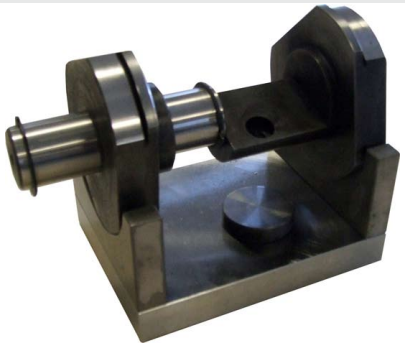

® Automobili Lamborghini S.p.A.
The information and procedures published below are strictly confidential and exclusively for the Lamborghini Dealer Network and Authorized Service Points. All copyrights are property of Automobili Lamborghini S.p.A based on copyright law. All of the PDF chapters in the WEB workshop manuals described below are based on information available at the time of publication. The company reserves the right to make updates and modifications. The following are prohibited: reprinting, reproduction, forwarding to unauthorized people and/or third parties, and translation, including partial, without written authorization from Automobili Lamborghini S.p.A.

Running Gear

D= Diablo M= Murcielago G= Gallardo

	Code	Description	D	M	G			Photo
21a	960095012	Ring nut wrench **Closet 1** **Drawer 10** **Position 21a**	●					
21b	965195053	51-33902 Front ring nut wrench **Closet 1** **Drawer 11** **Position 21b**	●					
21c	965295028	52-33369 Rear ring nut wrench **Closet 1** **Drawer 11** **Position 21c**	●					

® Automobili Lamborghini S.p.A.
The information and procedures published below are strictly confidential and exclusively for the Lamborghini Dealer Network and Authorized Service Points. All copyrights are property of Automobili Lamborghini S.p.A based on copyright law. All of the PDF chapters in the WEB workshop manuals described below are based on information available at the time of publication. The company reserves the right to make updates and modifications. The following are prohibited: reprinting, reproduction, forwarding to unauthorized people and/or third parties, and translation, including partial, without written authorization from Automobili Lamborghini S.p.A.

	Code	Description	D	M	G			Photo
22a	965295010	Suspension arm ring nut wrench **Closet 1** **Drawer 11** **Position 22a**	●					
22b	965195067	Hub carrier bearing ring nut wrench **Closet 1** **Drawer 11** **Position 22b**	●					
22c	965195069	52-33369 Front ring nut wrench **Closet 1** **Drawer 13** **Position 24b**		●				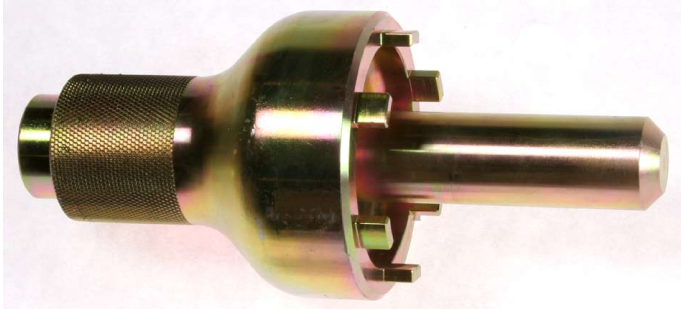

® Automobili Lamborghini S.p.A.
The information and procedures published below are strictly confidential and exclusively for the Lamborghini Dealer Network and Authorized Service Points. All copyrights are property of Automobili Lamborghini S.p.A based on copyright law. All of the PDF chapters in the WEB workshop manuals described below are based on information available at the time of publication. The company reserves the right to make updates and modifications. The following are prohibited: reprinting, reproduction, forwarding to unauthorized people and/or third parties, and translation, including partial, without written authorization from Automobili Lamborghini S.p.A.

	Code	Description	D	M	G			Photo
23a	961195003	Estractor or remover **Closet 1** **Drawer 12** **Position 23a**	●	●				
23b	961195004	Extractor or remover **Closet 1** **Drawer 12** **Position 23b**	●	●				
23c	62495079	Shift lever boot installer **Closet 1** **Drawer 13** **Position 23c**		●				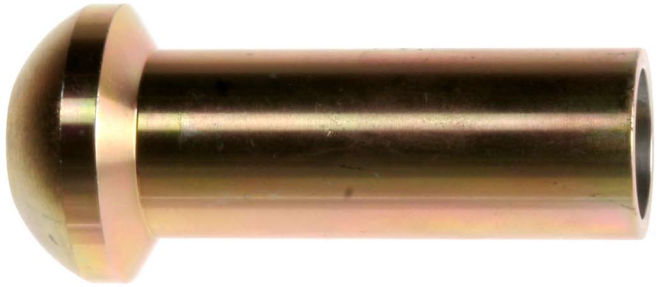

® Automobili Lamborghini S.p.A.
The information and procedures published below are strictly confidential and exclusively for the Lamborghini Dealer Network and Authorized Service Points. All copyrights are property of Automobili Lamborghini S.p.A based on copyright law. All of the PDF chapters in the WEB workshop manuals described below are based on information available at the time of publication. The company reserves the right to make updates and modifications. The following are prohibited: reprinting, reproduction, forwarding to unauthorized people and/or third parties, and translation, including partial, without written authorization from Automobili Lamborghini S.p.A.

	Code	Description	D	M	G			Photo
24a	62495069	**A.** E-gear actuator reset tool **B.** E-gear actuator reset tool **Closet 1** **Drawer 12** **Position 24a**		●				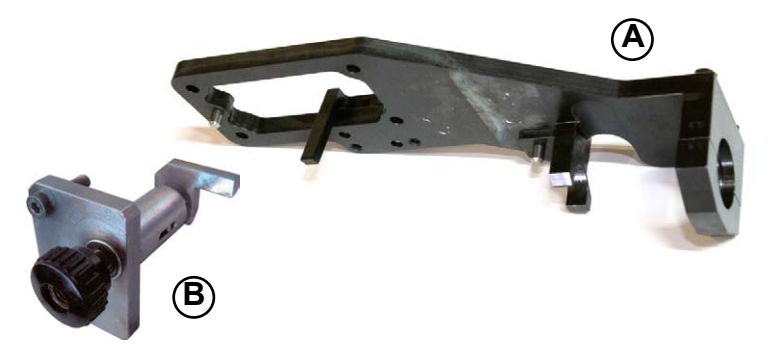
24b	965195069	52-33369 Front ring nut wrench **Closet 1** **Drawer 13** **Position 24b**		●				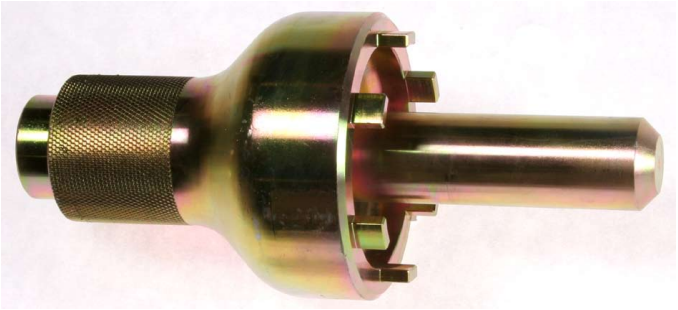
24c	65295046	147 rear hub bearing ring nut wrench **Closet 1** **Drawer 13** **Position 24c**		●				

® Automobili Lamborghini S.p.A.
The information and procedures published below are strictly confidential and exclusively for the Lamborghini Dealer Network and Authorized Service Points. All copyrights are property of Automobili Lamborghini S.p.A based on copyright law. All of the PDF chapters in the WEB workshop manuals described below are based on information available at the time of publication. The company reserves the right to make updates and modifications. The following are prohibited: reprinting, reproduction, forwarding to unauthorized people and/or third parties, and translation, including partial, without written authorization from Automobili Lamborghini S.p.A.

	Code	Description	D	M	G			Photo
25a	62395079	Rear differential ring nut wrench **Closet 1** **Drawer 12** **Position 25a**		●				
25b	62395078	Front differential ring nut wrench **Closet 1** **Drawer 12** **Position 25b**		●				
25c	62395059	Viscous coupling ring nut wrench **Closet 1** **Drawer 12** **Position 25c**		●				

® Automobili Lamborghini S.p.A.
The information and procedures published below are strictly confidential and exclusively for the Lamborghini Dealer Network and Authorized Service Points. All copyrights are property of Automobili Lamborghini S.p.A based on copyright law. All of the PDF chapters in the WEB workshop manuals described below are based on information available at the time of publication. The company reserves the right to make updates and modifications. The following are prohibited: reprinting, reproduction, forwarding to unauthorized people and/or third parties, and translation, including partial, without written authorization from Automobili Lamborghini S.p.A.

	Code	Description	D	M	G			Photo
26a	62395067	Front differential pinion retainer **Closet 1** **Drawer 12** **Position 26a**		●				
26b	62395070	Viscous coupling retainer for ring nut tightening **Closet 1** **Drawer 12** **Position 26b**		●				
26c	0051009334	Pneumatic valve extension **Closet 1** **Drawer 13** **Position 26c**		●				

® Automobili Lamborghini S.p.A.
The information and procedures published below are strictly confidential and exclusively for the Lamborghini Dealer Network and Authorized Service Points. All copyrights are property of Automobili Lamborghini S.p.A based on copyright law. All of the PDF chapters in the WEB workshop manuals described below are based on information available at the time of publication. The company reserves the right to make updates and modifications. The following are prohibited: reprinting, reproduction, forwarding to unauthorized people and/or third parties, and translation, including partial, without written authorization from Automobili Lamborghini S.p.A.

	Code	Description	D	M	G			Photo
27a	62451007	Extracting plate Rh-Lh output shaft **Closet 1** **Drawer 4** **Position 27a**			●			
27b	62451008	Extracting tool **Closet 1** **Drawer 5** **Position 27b**			●			
27c	62451010	Complete gears extracting plate **Closet 1** **Drawer 4** **Position 27c**			●			

® Automobili Lamborghini S.p.A.
The information and procedures published below are strictly confidential and exclusively for the Lamborghini Dealer Network and Authorized Service Points. All copyrights are property of Automobili Lamborghini S.p.A based on copyright law. All of the PDF chapters in the WEB workshop manuals described below are based on information available at the time of publication. The company reserves the right to make updates and modifications. The following are prohibited: reprinting, reproduction, forwarding to unauthorized people and/or third parties, and translation, including partial, without written authorization from Automobili Lamborghini S.p.A.

	Code	Description	D	M	G			Photo
28a	62451011	Extracting shaft from intermediate plate **Closet 1** **Drawer 4** **Position 28a**			●			
28b	62451012	Punch for fitting synchroniser hub **Closet 1** **Drawer 4** **Position 28b**			●			
28c	62451015	Tool for assembling and centering drive driven gear **Closet 1** **Drawer 5** **Position 28c**			●			

® Automobili Lamborghini S.p.A.
The information and procedures published below are strictly confidential and exclusively for the Lamborghini Dealer Network and Authorized Service Points. All copyrights are property of Automobili Lamborghini S.p.A based on copyright law. All of the PDF chapters in the WEB workshop manuals described below are based on information available at the time of publication. The company reserves the right to make updates and modifications. The following are prohibited: reprinting, reproduction, forwarding to unauthorized people and/or third parties, and translation, including partial, without written authorization from Automobili Lamborghini S.p.A.

	Code	Description	D	M	G			Photo
29a	62451016	Tool for fitting the roller bearing's outer rings **Closet 1** **Drawer 5** **Position 29a**			●			
29b	62451017	Tool for testing the pinion Positioning **Closet 1** **Drawer 1** **Position 29b**			●			
29c	62451018	Tool for fitting bearing outer ring **Closet 1** **Drawer 5** **Position 29c**			●			

® Automobili Lamborghini S.p.A.
The information and procedures published below are strictly confidential and exclusively for the Lamborghini Dealer Network and Authorized Service Points. All copyrights are property of Automobili Lamborghini S.p.A based on copyright law. All of the PDF chapters in the WEB workshop manuals described below are based on information available at the time of publication. The company reserves the right to make updates and modifications. The following are prohibited: reprinting, reproduction, forwarding to unauthorized people and/or third parties, and translation, including partial, without written authorization from Automobili Lamborghini S.p.A.

	Code	Description	D	M	G			Photo
30a	62451019	Punch for fitting roller bearing lay shaft (on housing) **Closet 1** **Drawer 4** **Position 30a**			●			
30b	62451020	Tool for extracting/fitting bearing outer ring on the housing **Closet 1** **Drawer 5** **Position 30b**			●			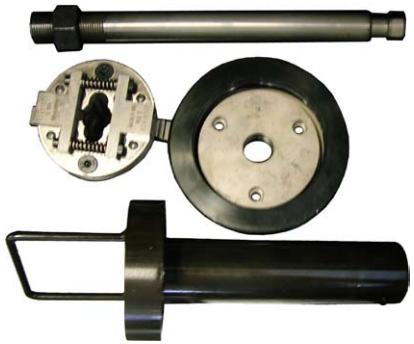
30c	62451021	Punch for fitting output shaft on cover **Closet 1** **Drawer 1** **Position 30c**			●			

® Automobili Lamborghini S.p.A.
The information and procedures published below are strictly confidential and exclusively for the Lamborghini Dealer Network and Authorized Service Points. All copyrights are property of Automobili Lamborghini S.p.A based on copyright law. All of the PDF chapters in the WEB workshop manuals described below are based on information available at the time of publication. The company reserves the right to make updates and modifications. The following are prohibited: reprinting, reproduction, forwarding to unauthorized people and/or third parties, and translation, including partial, without written authorization from Automobili Lamborghini S.p.A.

	Code	Description	D	M	G			Photo
31a	62451022	Extracting punch roller bearing outer ring on cover **Closet 1** **Drawer 1** **Position 31a**			●			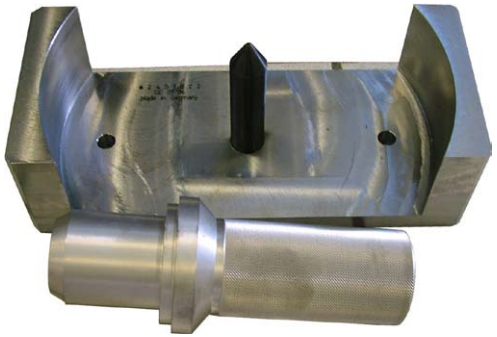
31b	62451023	Tools for fitting the main shaft and lay shaft on intermediate plate (2 pieces) **Closet 1** **Drawer 1** **Position 31b**			●			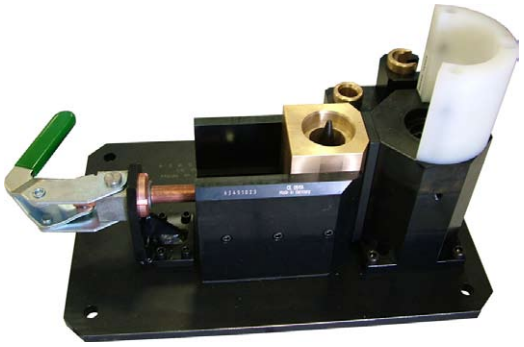
31c	62451024	Punch for fitting roller bearing PTO shaft (on housing) **Closet 1** **Drawer 5** **Position 31c**			●			

® Automobili Lamborghini S.p.A.
The information and procedures published below are strictly confidential and exclusively for the Lamborghini Dealer Network and Authorized Service Points. All copyrights are property of Automobili Lamborghini S.p.A based on copyright law. All of the PDF chapters in the WEB workshop manuals described below are based on information available at the time of publication. The company reserves the right to make updates and modifications. The following are prohibited: reprinting, reproduction, forwarding to unauthorized people and/or third parties, and translation, including partial, without written authorization from Automobili Lamborghini S.p.A.

	Code	Description	D	M	G			Photo
32a	62300004	Tool for pinion head bearing fitting **Closet 1** **Drawer 3** **Position 32a**			●			
32b	62300005	Tool for differential output shaft fitting **Closet 1** **Drawer 7** **Position 32b**			●			
32c	62300006	Kickback tool for ring-nut **Closet 1** **Drawer 7** **Position 32c**			●			

® Automobili Lamborghini S.p.A.
The information and procedures published below are strictly confidential and exclusively for the Lamborghini Dealer Network and Authorized Service Points. All copyrights are property of Automobili Lamborghini S.p.A based on copyright law. All of the PDF chapters in the WEB workshop manuals described below are based on information available at the time of publication. The company reserves the right to make updates and modifications. The following are prohibited: reprinting, reproduction, forwarding to unauthorized people and/or third parties, and translation, including partial, without written authorization from Automobili Lamborghini S.p.A.

	Code	Description	D	M	G			Photo
33a	62300007	Tool for pinion bearings outer rings fitting **Closet 1** **Drawer 7** **Position 33a**			●			
33b	62300008	Tool for pinion supporting **Closet 1** **Drawer 7** **Position 33b**			●			
33c	62300009	Tool for shank-pinion bearing fitting **Closet 1** **Drawer 3** **Position 33c**			●			

® Automobili Lamborghini S.p.A.
The information and procedures published below are strictly confidential and exclusively for the Lamborghini Dealer Network and Authorized Service Points. All copyrights are property of Automobili Lamborghini S.p.A based on copyright law. All of the PDF chapters in the WEB workshop manuals described below are based on information available at the time of publication. The company reserves the right to make updates and modifications. The following are prohibited: reprinting, reproduction, forwarding to unauthorized people and/or third parties, and translation, including partial, without written authorization from Automobili Lamborghini S.p.A.

	Code	Description	D	M	G			Photo
34a	62300010	Punch for bearing fitting on differential **Closet 1** **Drawer 3** **Position 34a**			●			
34b	62300011	Punch for radial shaft seal fitting **Closet 1** **Drawer 7** **Position 34b**			●			
34c	62300012	Punch for roller bearing outer ring fitting on flange support **Closet 1** **Drawer 7** **Position 34c**			●			

® Automobili Lamborghini S.p.A.
The information and procedures published below are strictly confidential and exclusively for the Lamborghini Dealer Network and Authorized Service Points. All copyrights are property of Automobili Lamborghini S.p.A based on copyright law. All of the PDF chapters in the WEB workshop manuals described below are based on information available at the time of publication. The company reserves the right to make updates and modifications. The following are prohibited: reprinting, reproduction, forwarding to unauthorized people and/or third parties, and translation, including partial, without written authorization from Automobili Lamborghini S.p.A.

	Code	Description	D	M	G			Photo
35a	62300013	Punch for fitting ball bearing **Closet 1** **Drawer 3** **Position 35a**			●			
35b	62300014	Punch for bearing fitting on differential housing (viscous coupling) **Closet 1** **Drawer 7** **Position 35b**			●			
35c	69195227	Universal trolley **Out of the closet**	●	●	●			

® Automobili Lamborghini S.p.A.
The information and procedures published below are strictly confidential and exclusively for the Lamborghini Dealer Network and Authorized Service Points. All copyrights are property of Automobili Lamborghini S.p.A based on copyright law. All of the PDF chapters in the WEB workshop manuals described below are based on information available at the time of publication. The company reserves the right to make updates and modifications. The following are prohibited: reprinting, reproduction, forwarding to unauthorized people and/or third parties, and translation, including partial, without written authorization from Automobili Lamborghini S.p.A.

	Code	Description	D	M	G			Photo
36a	69195228	Loose basin for the trolley	●	●	●			
		Out of the closet						
36b	**69195229**	**Kit of brackets:**						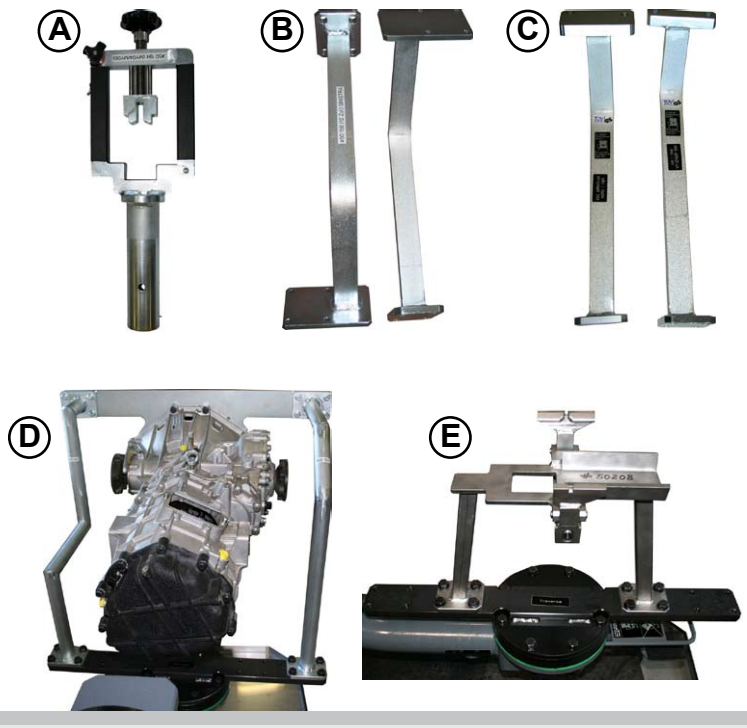
	69195236	differential bracket (**A**)	●	●	●			
	69195237	bracket for engine (**B**)	●	●				
	69195238	bracket for engine (**C**)			●			
	69195239	gearbox bracket (**D**)		●	●			
	69195240	gearbox bracket (central slinging) (**E**)		●				
		Out of the closet						

® Automobili Lamborghini S.p.A.
The information and procedures published below are strictly confidential and exclusively for the Lamborghini Dealer Network and Authorized Service Points. All copyrights are property of Automobili Lamborghini S.p.A based on copyright law. All of the PDF chapters in the WEB workshop manuals described below are based on information available at the time of publication. The company reserves the right to make updates and modifications. The following are prohibited: reprinting, reproduction, forwarding to unauthorized people and/or third parties, and translation, including partial, without written authorization from Automobili Lamborghini S.p.A.

	Code	Description	D	M	G			Photo
37a	62400006	Tools for fitting the main shaft and lay shaft on intermediate plate **Closet 1** **Drawer 6** **Position 37a**			●			
37b	62300015	Tool for pinion head bearing outer ring disassembly **Closet 1** **Drawer 6** **Position 37b**			●			
37c	62300016	Window cover **Closet 1** **Drawer 6** **Position 37c**			●			

® Automobili Lamborghini S.p.A.
The information and procedures published below are strictly confidential and exclusively for the Lamborghini Dealer Network and Authorized Service Points. All copyrights are property of Automobili Lamborghini S.p.A based on copyright law. All of the PDF chapters in the WEB workshop manuals described below are based on information available at the time of publication. The company reserves the right to make updates and modifications. The following are prohibited: reprinting, reproduction, forwarding to unauthorized people and/or third parties, and translation, including partial, without written authorization from Automobili Lamborghini S.p.A.

	Code	Description	D	M	G			Photo
38a	62451025	Tool for testing and positioning outside manual gearbox control **Closet 1** **Drawer 6** **Position 38a**			●			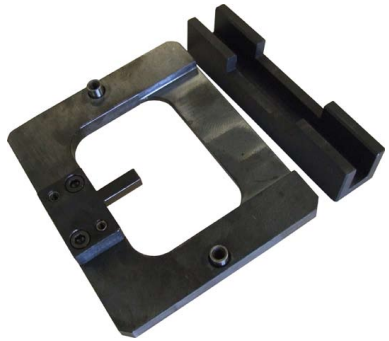
38b	62395054	Tool for measuring the height of the rear differential pinion **Closet 1** **Drawer 8** **Position 38b**		●				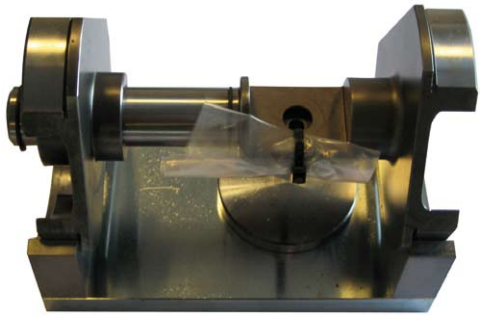
38c	62395068	Tool for measuring the height of the front differential pinion **Closet 1** **Drawer 8** **Position 38c**		●				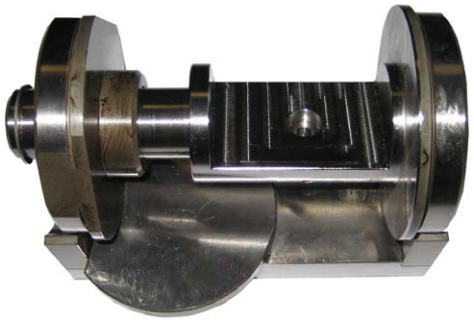

® Automobili Lamborghini S.p.A.
The information and procedures published below are strictly confidential and exclusively for the Lamborghini Dealer Network and Authorized Service Points. All copyrights are property of Automobili Lamborghini S.p.A based on copyright law. All of the PDF chapters in the WEB workshop manuals described below are based on information available at the time of publication. The company reserves the right to make updates and modifications. The following are prohibited: reprinting, reproduction, forwarding to unauthorized people and/or third parties, and translation, including partial, without written authorization from Automobili Lamborghini S.p.A.

Body and chassis

D= Diablo M= Murcielago G= Gallardo

	Code	Description	D	M	G			Photo
39a	69495546	Pneumatic glue gun **Out of the closet**		●				
39b	69495516	Static guards kit **Out of the closet**		●				
39c	69495563	Guards kit **Out of the closet**			●			

® Automobili Lamborghini S.p.A.
The information and procedures published below are strictly confidential and exclusively for the Lamborghini Dealer Network and Authorized Service Points. All copyrights are property of Automobili Lamborghini S.p.A based on copyright law. All of the PDF chapters in the WEB workshop manuals described below are based on information available at the time of publication. The company reserves the right to make updates and modifications. The following are prohibited: reprinting, reproduction, forwarding to unauthorized people and/or third parties, and translation, including partial, without written authorization from Automobili Lamborghini S.p.A.

	Code	Description	D	M	G			Photo
40a	69451002	Aluminium tools cabinet **Out of the closet**			A			
40b	69451005	Pneumatic riveter **Out of the closet**			A			
40c	69451004	Crack detection kit **Out of the closet**			A			

(A) = For repair of aluminium body only

® Automobili Lamborghini S.p.A.
The information and procedures published below are strictly confidential and exclusively for the Lamborghini Dealer Network and Authorized Service Points. All copyrights are property of Automobili Lamborghini S.p.A based on copyright law. All of the PDF chapters in the WEB workshop manuals described below are based on information available at the time of publication. The company reserves the right to make updates and modifications. The following are prohibited: reprinting, reproduction, forwarding to unauthorized people and/or third parties, and translation, including partial, without written authorization from Automobili Lamborghini S.p.A.

	Code	Description	D	M	G			Photo
41a	69451006	Glue gun **Out of the closet**			A			
41b	69451008	Storage container for small parts **Out of the closet**			A			
41c	69451012	Saw for car body **Out of the closet**			A			

(A) = For repair of aluminium body only

® Automobili Lamborghini S.p.A.
The information and procedures published below are strictly confidential and exclusively for the Lamborghini Dealer Network and Authorized Service Points. All copyrights are property of Automobili Lamborghini S.p.A based on copyright law. All of the PDF chapters in the WEB workshop manuals described below are based on information available at the time of publication. The company reserves the right to make updates and modifications. The following are prohibited: reprinting, reproduction, forwarding to unauthorized people and/or third parties, and translation, including partial, without written authorization from Automobili Lamborghini S.p.A.

	Code	Description	D	M	G			Photo
42a	69451003	Body reference gauge **Out of the closet**			A			
42b	49451011	Electric cutter for aluminum **Out of the closet**			A			
42c	69451007	Grinding wheel holder **Out of the closet**			A			

(A) = For repair of aluminium body only

® Automobili Lamborghini S.p.A.
The information and procedures published below are strictly confidential and exclusively for the Lamborghini Dealer Network and Authorized Service Points. All copyrights are property of Automobili Lamborghini S.p.A based on copyright law. All of the PDF chapters in the WEB workshop manuals described below are based on information available at the time of publication. The company reserves the right to make updates and modifications. The following are prohibited: reprinting, reproduction, forwarding to unauthorized people and/or third parties, and translation, including partial, without written authorization from Automobili Lamborghini S.p.A.

	Code	Description	D	M	G			Photo
43a	69453001	Positioning of the soft-top front closure housings **BOX**			●			
43b	69453002	Centering bridge **BOX**			●			
43c	69453003	Side window alignment (**A**) RH Arm (**B**) LH Arm (**C**) Spacer cross member **BOX**			●			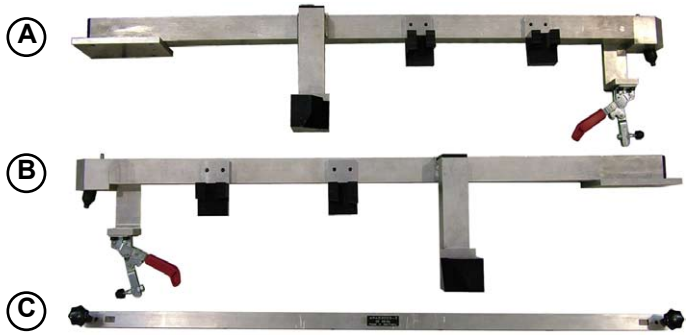

® Automobili Lamborghini S.p.A.
The information and procedures published below are strictly confidential and exclusively for the Lamborghini Dealer Network and Authorized Service Points. All copyrights are property of Automobili Lamborghini S.p.A based on copyright law. All of the PDF chapters in the WEB workshop manuals described below are based on information available at the time of publication. The company reserves the right to make updates and modifications. The following are prohibited: reprinting, reproduction, forwarding to unauthorized people and/or third parties, and translation, including partial, without written authorization from Automobili Lamborghini S.p.A.

	Code	Description	D	M	G			Photo
44a	69453004	Side plate attachment (**A**) LH Arm (**B**) RH Arm **BOX**			●			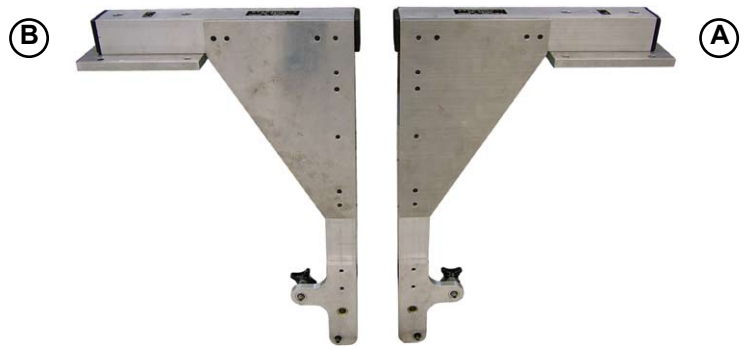
44b	69453005	Positioning of the rear window (RWM) **BOX**			●			
44c	69453006	Positioning the engine hood hinge on the chassis (**A**) LH Jig (**B**) RH Jig **BOX**			●			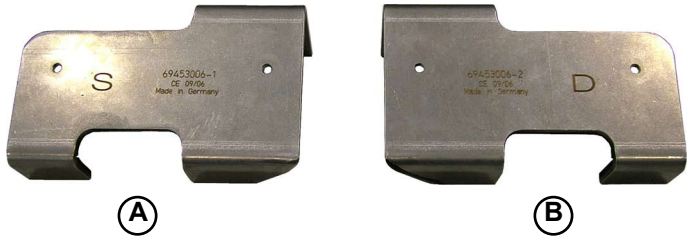

® Automobili Lamborghini S.p.A.
The information and procedures published below are strictly confidential and exclusively for the Lamborghini Dealer Network and Authorized Service Points. All copyrights are property of Automobili Lamborghini S.p.A based on copyright law. All of the PDF chapters in the WEB workshop manuals described below are based on information available at the time of publication. The company reserves the right to make updates and modifications. The following are prohibited: reprinting, reproduction, forwarding to unauthorized people and/or third parties, and translation, including partial, without written authorization from Automobili Lamborghini S.p.A.

Diagnosis

D= Diablo M= Murcielago G= Gallardo

	Code	Description	D	M	G			Photo
45a	006134045	Diagnosis reset connector **Out of the closet**	●					
45b	009250157	LM Console **Out of the closet**	●					
45c	006038128	R45 Connector **Out of the closet**	●					

® Automobili Lamborghini S.p.A.
The information and procedures published below are strictly confidential and exclusively for the Lamborghini Dealer Network and Authorized Service Points. All copyrights are property of Automobili Lamborghini S.p.A based on copyright law. All of the PDF chapters in the WEB workshop manuals described below are based on information available at the time of publication. The company reserves the right to make updates and modifications. The following are prohibited: reprinting, reproduction, forwarding to unauthorized people and/or third parties, and translation, including partial, without written authorization from Automobili Lamborghini S.p.A.

	Code	Description	D	M	G			Photo
46a	964300004	R46 connector **Out of the closet**	●					
46b	0043010644	2.0 OHM Airbag male connector **Out of the closet**	●	●				
46c	964300002	Airbag/ABS diagnostics interface **Out of the closet**	●	●				

® Automobili Lamborghini S.p.A.
The information and procedures published below are strictly confidential and exclusively for the Lamborghini Dealer Network and Authorized Service Points. All copyrights are property of Automobili Lamborghini S.p.A based on copyright law. All of the PDF chapters in the WEB workshop manuals described below are based on information available at the time of publication. The company reserves the right to make updates and modifications. The following are prohibited: reprinting, reproduction, forwarding to unauthorized people and/or third parties, and translation, including partial, without written authorization from Automobili Lamborghini S.p.A.

	Code	Description	D	M	G			Photo
47a	69190056	PC Can Interface (**A**)	●	●	●			
	69190193	PC Can Interface - USB (**B**)						
		Index C*						
		Out of the closet						
		C* allows to read parameters and error codes, and to program control units						
47b	900000126*	MY03-04 WIRING DIAGRAM CD ROM		●	●			
		Out of the closet						
		* ROADSTER model not included						
47c	69190074	Lamborghini-Audi* OBD adaptor			●			
		Out of the closet						
		* allows to connect VAS tester to the vehicle						

® Automobili Lamborghini S.p.A.
The information and procedures published below are strictly confidential and exclusively for the Lamborghini Dealer Network and Authorized Service Points. All copyrights are property of Automobili Lamborghini S.p.A based on copyright law. All of the PDF chapters in the WEB workshop manuals described below are based on information available at the time of publication. The company reserves the right to make updates and modifications. The following are prohibited: reprinting, reproduction, forwarding to unauthorized people and/or third parties, and translation, including partial, without written authorization from Automobili Lamborghini S.p.A.

	Code	Description	D	M	G			Photo
48a	66095011	Diagnostics interface for LARA-AS connection (Basic XS) **Out of the closet**		●	●			
48b	66095012 69190206	Cable for LARA-AS diagnostics interface (My 08 and older models) color grey Cable for LARA-AS diagnostics interface (mY 09) color black **Out of the closet**		●	●			
48c	69190063	Diagnostics PC **Out of the closet**		●	●			

® Automobili Lamborghini S.p.A.
The information and procedures published below are strictly confidential and exclusively for the Lamborghini Dealer Network and Authorized Service Points. All copyrights are property of Automobili Lamborghini S.p.A based on copyright law. All of the PDF chapters in the WEB workshop manuals described below are based on information available at the time of publication. The company reserves the right to make updates and modifications. The following are prohibited: reprinting, reproduction, forwarding to unauthorized people and/or third parties, and translation, including partial, without written authorization from Automobili Lamborghini S.p.A.

	Code	Description	D	M	G			Photo
49a	991000402	Laptop bag **Out of the closet**			●			
49b	**66100019**	**Kit of diagnostic tools**			●			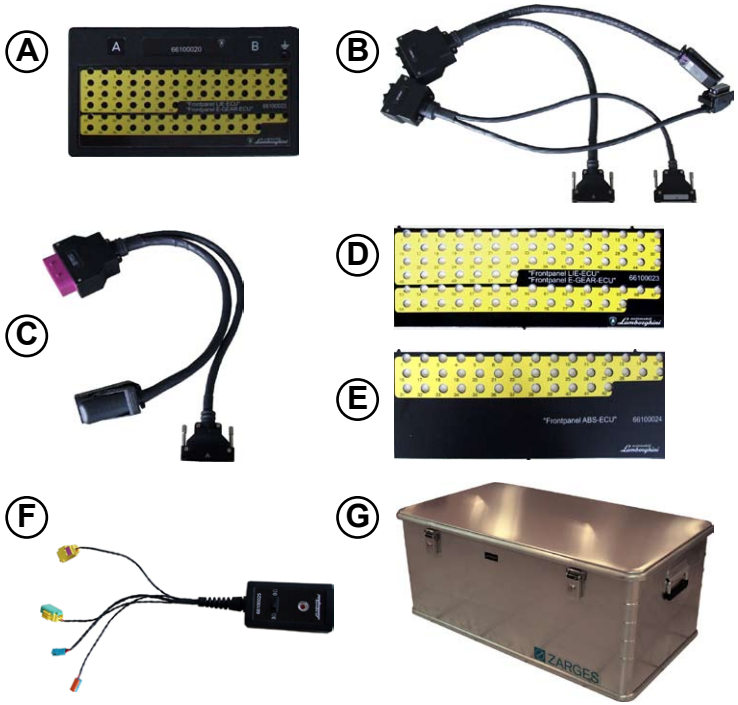
	66100020	Break Out Box (**A**)						
	66100021	Adaptercable LIE + Egear 52-pol. & 28-pol. (**B**)						
	66100022	Adaptercable 42-pol. (ABS) (**C**)						
	66100023	Frontpanel LIE + Egear (**D**)						
	66100024	Frontpanel ABS (**E**)						
	66100025	AIR BAG Simulator (**F**)						
	66100026	Case (**G**) - optional - **Out of the closet**						

® Automobili Lamborghini S.p.A.
The information and procedures published below are strictly confidential and exclusively for the Lamborghini Dealer Network and Authorized Service Points. All copyrights are property of Automobili Lamborghini S.p.A based on copyright law. All of the PDF chapters in the WEB workshop manuals described below are based on information available at the time of publication. The company reserves the right to make updates and modifications. The following are prohibited: reprinting, reproduction, forwarding to unauthorized people and/or third parties, and translation, including partial, without written authorization from Automobili Lamborghini S.p.A.

	Code	Description	D	M	G			Photo
50a	69190203	VAS 5054 interface **Out of the closet**			●			
50b	900000155	Kit DVD Off-line until MY08 **Out of the closet**	●	●	●			
50c	900000161	Kit VAS PC Software **Out of the closet**			●			

® Automobili Lamborghini S.p.A.
The information and procedures published below are strictly confidential and exclusively for the Lamborghini Dealer Network and Authorized Service Points. All copyrights are property of Automobili Lamborghini S.p.A based on copyright law. All of the PDF chapters in the WEB workshop manuals described below are based on information available at the time of publication. The company reserves the right to make updates and modifications. The following are prohibited: reprinting, reproduction, forwarding to unauthorized people and/or third parties, and translation, including partial, without written authorization from Automobili Lamborghini S.p.A.

Electrical system

D= Diablo M= Murcielago G= Gallardo

	Code	Description	D	M	G			Photo
51a	69190082	Battery charger **Out of the closet**	●	●	●			
51b	69190083	Tester **Out of the closet**	●	●	●			
51c	69190081	Wiring harness repair kit **Out of the closet**	●	●	●			

® Automobili Lamborghini S.p.A.
The information and procedures published below are strictly confidential and exclusively for the Lamborghini Dealer Network and Authorized Service Points. All copyrights are property of Automobili Lamborghini S.p.A based on copyright law. All of the PDF chapters in the WEB workshop manuals described below are based on information available at the time of publication. The company reserves the right to make updates and modifications. The following are prohibited: reprinting, reproduction, forwarding to unauthorized people and/or third parties, and translation, including partial, without written authorization from Automobili Lamborghini S.p.A.

	Code	Description	D	M	G			Photo
52a	3B0051530	Hi-fi/navigator extractor **Out of the closet**			●			
52b								
52c								

® Automobili Lamborghini S.p.A.
The information and procedures published below are strictly confidential and exclusively for the Lamborghini Dealer Network and Authorized Service Points. All copyrights are property of Automobili Lamborghini S.p.A based on copyright law. All of the PDF chapters in the WEB workshop manuals described below are based on information available at the time of publication. The company reserves the right to make updates and modifications. The following are prohibited: reprinting, reproduction, forwarding to unauthorized people and/or third parties, and translation, including partial, without written authorization from Automobili Lamborghini S.p.A.

CAUTION!

- **Always collect any oil, brake fluid or other fluids in special containers. To reduce the risk of intoxication or poisoning, never use empty food or drink containers. Someone could accidentally drink from them.**
- **To reduce the risk of fire, always store inflammable fluids away from fire hazards. Immediately collect and clean up any hazardous leaks. Adequately store or dispose of dirty rags.**

Note
Respect the environment and eco-system. Before emptying the oil sump, check how to correctly dispose of exhausted oil. Do not dispose of exhausted oil by pouring it on the ground, in the drainage system, rivers, ponds or lakes. Comply with the local waste disposal regulations.

Hazards

Coolant
The coolant contains highly inflammable ethylene glycol. Ethylene glycol emits a completely transparent flame, impossible to see with the naked eye. A nearby ethylene glycol combustion cloud can only be discerned by the presence of an unusual heat source. It is forbidden to approach with: naked flames, hot surfaces, cigarettes and components that may produce sparks (e.g. electrical switches). Take care during topping up/filling procedures. Contact with hot parts (e.g. the engine, exhaust, etc.) can cause combustion.
Thoroughly wash with soap and water any skin that comes in contact with coolant. Wear protective gloves to avoid regular contact.

Exhausted engine oil
Long-term and repeated contact with exhausted engine oil can cause skin cancer. Thoroughly wash with soap and water any skin that comes in contact with exhausted engine oil. Wear protective gloves to avoid regular contact.

Brake fluid
Brake fluid can damage plastic, rubber or painted materials. Protect these parts from any contact. If they are exposed to brake fluid, clean immediately with a cloth.

® Automobili Lamborghini S.p.A.
The information and procedures published below are strictly confidential and exclusively for the Lamborghini Dealer Network and Authorized Service Points. All copyrights are property of Automobili Lamborghini S.p.A based on copyright law. All of the PDF chapters in the WEB workshop manuals described below are based on information available at the time of publication. The company reserves the right to make updates and modifications. The following are prohibited: reprinting, reproduction, forwarding to unauthorized people and/or third parties, and translation, including partial, without written authorization from Automobili Lamborghini S.p.A.

Ref	Items to be serviced	Quantity (liters)	Oil type	Specifications
A.	Engine	13.5 ± 0.5 with oil filter replacement	AGIP SINT 2000 EVOLUTION SAE 5W/40 (*) AGIP TECSINT CASTROL TXT Softec SAE 5W/40	API-SJ/CF
B.	Gearbox	3.5	AGIP ROTRA LSX SAE 75W/90	MIL-L 2105 D API GL4÷GL5 MIL-PRF 2105 E
C.	Rear differential	1.9	AGIP ROTRA LSX SAE 75W/90	MIL-L 2105 D API GL4÷GL5 MIL-PRF 2105 E
D.	Brake/clutch system	0.35	ATE TYP 200 DOT 4 Yellow-bernstein color	DOT 4 SAE J 1703
E.	Cooling system	15	AGIP ECOPERMANENT	BS 3151-B
F.	Steering box	0.12	SEMIFLUID GREASE	NLGI
G.	Fuel tank	100	Unleaded fuel 95 O.N.	
H.	Windshield washer reservoir	5	Mixture of water and screen washer fluid	
I.	Air conditioning	850 (g)	R134a ECOLOGICAL	
L.	Front differential	1	AGIP ROTRA LSX SAE 75W/90	MIL-L 2105 D API GL4÷GL5 MIL-L 2105 E
M.	Power steering/Lifting system	2.7	AGIP DEXRON II	
N.	E□gear system circuit fluid	only for topping up	TUTELA CS Speed	
	Grease		AGIP GREASE 33 FD DROP POINT 240 °C	NLGI 3
O.	Air Conditioning system	75 (g)	Pag iso 100 average viscosity	AT41238

* Driving the car at the highest performances or in countries with very high ambient temperature requires the use of Agip 4T 20W/50 (Castrol GTX7 Dynatec SAE 5W/40).

® Automobili Lamborghini S.p.A.
The information and procedures published below are strictly confidential and exclusively for the Lamborghini Dealer Network and Authorized Service Points. All copyrights are property of Automobili Lamborghini S.p.A based on copyright law. All of the PDF chapters in the WEB workshop manuals described below are based on information available at the time of publication. The company reserves the right to make updates and modifications. The following are prohibited: reprinting, reproduction, forwarding to unauthorized people and/or third parties, and translation, including partial, without written authorization from Automobili Lamborghini S.p.A.

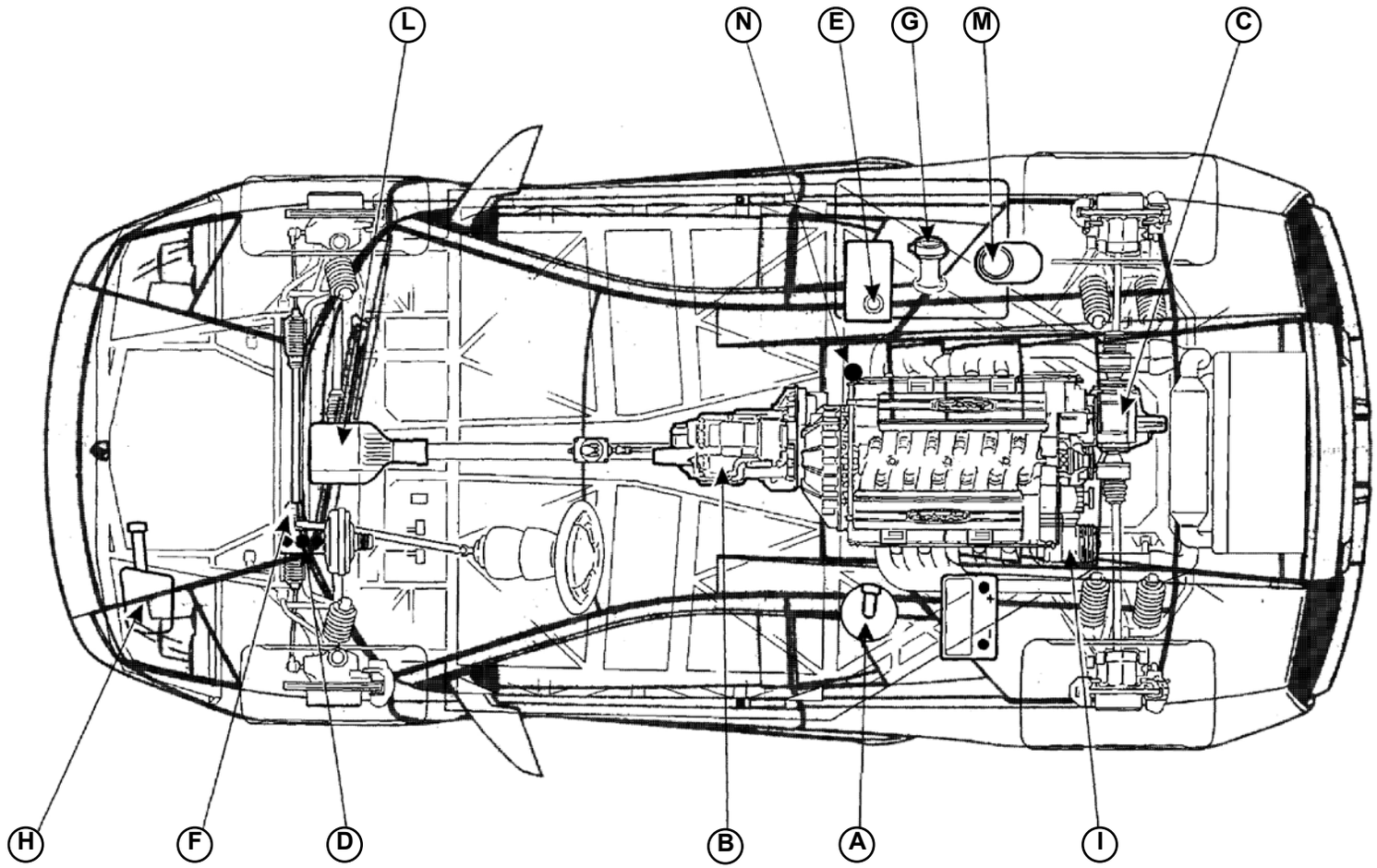

® Automobili Lamborghini S.p.A.
The information and procedures published below are strictly confidential and exclusively for the Lamborghini Dealer Network and Authorized Service Points. All copyrights are property of Automobili Lamborghini S.p.A based on copyright law. All of the PDF chapters in the WEB workshop manuals described below are based on information available at the time of publication. The company reserves the right to make updates and modifications. The following are prohibited: reprinting, reproduction, forwarding to unauthorized people and/or third parties, and translation, including partial, without written authorization from Automobili Lamborghini S.p.A.

Engine

- Mid engine, longitudinal layout.
- L 537 12 V-cylinders (60°)
- Total displacement 6,496 cm3, bore 88 mm, stroke 89 mm
- Compression ratio 11 ± 0.2:1
- Maximum power 471 kW (640 HP) at 8,000 rpm
- Maximum torque 660 Nm (67.3 kgm) at 6,000 rpm
- Liquid cooling system with pressurized circuit and double radiator and air intakes with electronically-controlled opening
- Electronically controlled variable geometry intake system
- Timing with four overhead camshafts, four valves per cylinder, and electronic intake/exhaust variable valve timing
- Lubrication with dry pan

CAUTION!

- **Never start the engine in closed or confined environments where there is inadequate ventilation. Engine exhaust fumes contain carbon monoxide (CO). Carbon monoxide is colorless and odorless and can be fatal.**
- **Never leave the engine unattended while it is running. An unattended vehicle with the engine running represents a hazard and compromises the safety of the operators.**
- **The engine compartment of any vehicle is potentially hazardous. Before carrying out any work inside the engine compartment, switch off the engine, remove the ignition key and allow the engine to cool down. Contact with hot engine components can cause serious skin burns.**
- **If it is necessary to leave the engine running while servicing the components in the engine compartment, ensure none of the gears are engaged. Always ensure the gear lever is in the parking position "0" and the handbrake is firmly pulled. If this is not the case, any increase in engine revolutions could move the vehicle, even when the handbrake is pulled.**
- **California Proposition n. 65: Engine exhaust manifolds and some of their components, as well as other vehicle components, either contain or issue chemical substances, known to the State of California to cause cancer, birth defects and other reproductive harm. Furthermore, some fluids contained in vehicles, as well as other wear prevention products, contain or issue chemical products, known to the State of California to cause cancer, birth defects and other reproductive harm.**

® Automobili Lamborghini S.p.A.
The information and procedures published below are strictly confidential and exclusively for the Lamborghini Dealer Network and Authorized Service Points. All copyrights are property of Automobili Lamborghini S.p.A based on copyright law. All of the PDF chapters in the WEB workshop manuals described below are based on information available at the time of publication. The company reserves the right to make updates and modifications. The following are prohibited: reprinting, reproduction, forwarding to unauthorized people and/or third parties, and translation, including partial, without written authorization from Automobili Lamborghini S.p.A.

Gearbox

Six-speed gearbox

Standard gear ratios:

1st gear	1 : 3.091
2nd gear	1 : 2.105
3rd gear	1 : 1.565
4th gear	1 : 1.241
5th gear	1 : 1.065
6rh gear	1 : 0.939

Note
The E□Gear ratios are the same as those for the manual gearbox.

Reverse gear	1 : 2.692

Gear ratio between countershaft and differential input shaft	1 : 1.242

Differential

Rear differential	1 : 2.529
Front differential	1 : 2.933

® Automobili Lamborghini S.p.A.
The information and procedures published below are strictly confidential and exclusively for the Lamborghini Dealer Network and Authorized Service Points. All copyrights are property of Automobili Lamborghini S.p.A based on copyright law. All of the PDF chapters in the WEB workshop manuals described below are based on information available at the time of publication. The company reserves the right to make updates and modifications. The following are prohibited: reprinting, reproduction, forwarding to unauthorized people and/or third parties, and translation, including partial, without written authorization from Automobili Lamborghini S.p.A.

Gearbox

Six-speed gearbox

Standard gear ratios:

1st gear	1 : 3.091
2nd gear	1 : 2.105
3rd gear	1 : 1.565
4th gear	1 : 1.241
5th gear	1 : 1.065
6rh gear	1 : 0.939

Note
The manual gearbox are the same as those for the E□Gear ratios.

Reverse gear	1 : 2.692

Gear ratio between countershaft and differential input shaft	1 : 1.242

Differential

Rear differential	1 : 2.529
Front differential	1 : 2.933

® Automobili Lamborghini S.p.A.
The information and procedures published below are strictly confidential and exclusively for the Lamborghini Dealer Network and Authorized Service Points. All copyrights are property of Automobili Lamborghini S.p.A based on copyright law. All of the PDF chapters in the WEB workshop manuals described below are based on information available at the time of publication. The company reserves the right to make updates and modifications. The following are prohibited: reprinting, reproduction, forwarding to unauthorized people and/or third parties, and translation, including partial, without written authorization from Automobili Lamborghini S.p.A.

Chassis and body

High-strength tubular steel structure with carbon fiber structural parts
Carbon fiber body except for doors (steel)
Electronically-controlled rear spoiler

Electronically-controlled variable geometry radiator air intakes

Tank capacity	1,00 l
Reserve tank	approx. 20 l

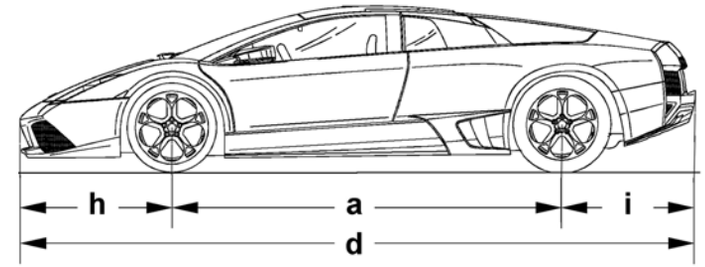

Dimensions and weight

Wheelbase	2,665 mm	**(a)**
Front track	1,635 mm	**(b)**
Rear track	1,695 mm	**(c)**
Total length	4,610 mm	**(d)**
Width:		
• with rear-view mirrors open	2,240 mm	**(e)**
• with rear-view mirrors closed	2,058 mm	**(l)**
Maximum height (vehicle empty)	1,135 mm	**(f)**
Minimum height (vehicle empty)	96 mm	**(g)**
Front overhang	1,035 mm	**(h)**
Rear overhang	910 mm	**(i)**
Dry weight	1,665 kg	
Seating capacity	2	
Front caster	6 degrees	

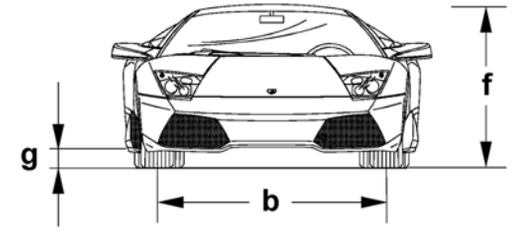

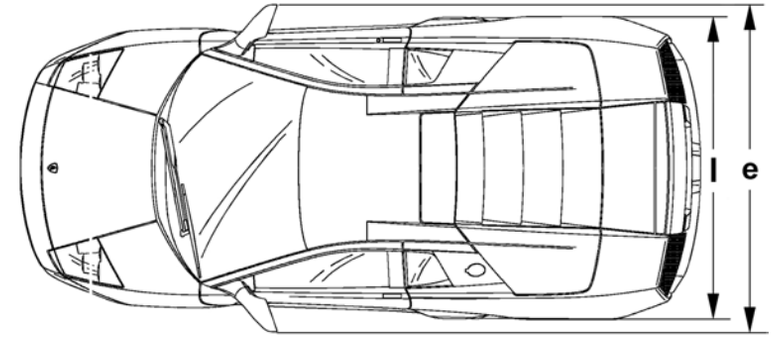

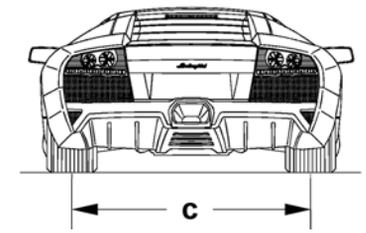

® Automobili Lamborghini S.p.A.
The information and procedures published below are strictly confidential and exclusively for the Lamborghini Dealer Network and Authorized Service Points. All copyrights are property of Automobili Lamborghini S.p.A based on copyright law. All of the PDF chapters in the WEB workshop manuals described below are based on information available at the time of publication. The company reserves the right to make updates and modifications. The following are prohibited: reprinting, reproduction, forwarding to unauthorized people and/or third parties, and translation, including partial, without written authorization from Automobili Lamborghini S.p.A.

	DESCRIPTION	TIGHTENING TORQUE (Nm)	PICTURE
1a	**Tightening torque of Screw M6 on the phase transformer cover** Mark the tightened screw with a yellow permanent marker **A.** screw	**10,5 ± 5%**	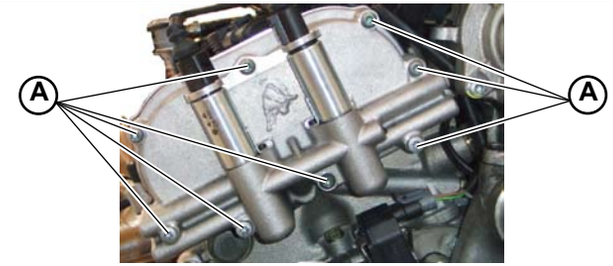
1b	**Tightening torque of Screw on the supports of the camshafts** **A.** screw	**9 ± 5%**	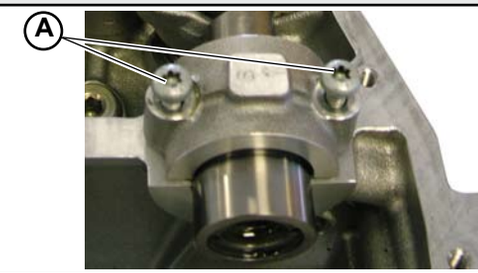
1c	**Assembling the Valeo clutch mechanism** Indicate that positions A-B-C have been tightened with a yellow permanent marker **1.** partially tighten the 3 screws in position A until 1-2 mm high **2.** completely tighten all the screws in groups of 3 x 120° according to the sequence B-A-C with a torque equal to 1.55 Kgm	**15,2 ± 5%**	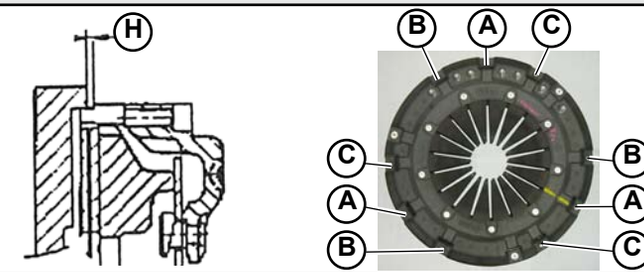
1d	**Assembling the oil inlet/outlet union on the oil pan** Use a yellow permanent marker to indicate it has been tightened **A.** tightening torque **B.** tightening torque	 **90 ± 3%** **45 ± 0 / 0.5%**	

® Automobili Lamborghini S.p.A.
The information and procedures published below are strictly confidential and exclusively for the Lamborghini Dealer Network and Authorized Service Points. All copyrights are property of Automobili Lamborghini S.p.A based on copyright law. All of the PDF chapters in the WEB workshop manuals described below are based on information available at the time of publication. The company reserves the right to make updates and modifications. The following are prohibited: reprinting, reproduction, forwarding to unauthorized people and/or third parties, and translation, including partial, without written authorization from Automobili Lamborghini S.p.A.

	DESCRIPTION	TIGHTENING TORQUE (Nm)	PICTURE
2a	**Tightening torque of the connecting rod bolts** Add Molykote 1000 on the bolt threading and striking surface **A.** bolt	**30 + 60°**	
2b	**Tightening torque of the starter nuts** **A.** nut	**65 ± 5%**	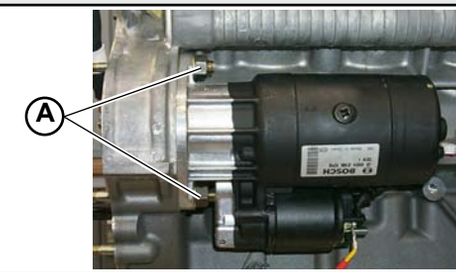
2c	**Tightening torque of the oil pump gear** **A.** nut	**29 ± 2%**	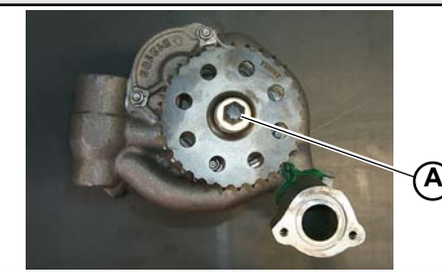
2d	**Assembling the oil pump on the crankcase** **A.** hexagonal screw (008100659) **B.** hexagonal socket head screw with corrugated washer (008700694)	**9 ± 5%**	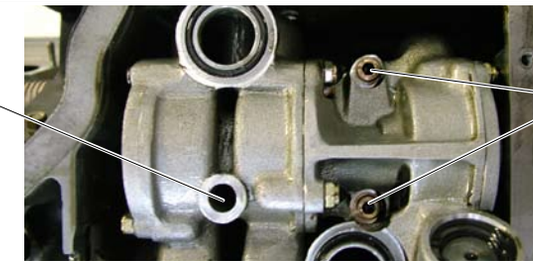

® Automobili Lamborghini S.p.A.
The information and procedures published below are strictly confidential and exclusively for the Lamborghini Dealer Network and Authorized Service Points. All copyrights are property of Automobili Lamborghini S.p.A based on copyright law. All of the PDF chapters in the WEB workshop manuals described below are based on information available at the time of publication. The company reserves the right to make updates and modifications. The following are prohibited: reprinting, reproduction, forwarding to unauthorized people and/or third parties, and translation, including partial, without written authorization from Automobili Lamborghini S.p.A.

	DESCRIPTION	TIGHTENING TORQUE (Nm)	PICTURE
3a	**Tightening torque of forks on gearbox**		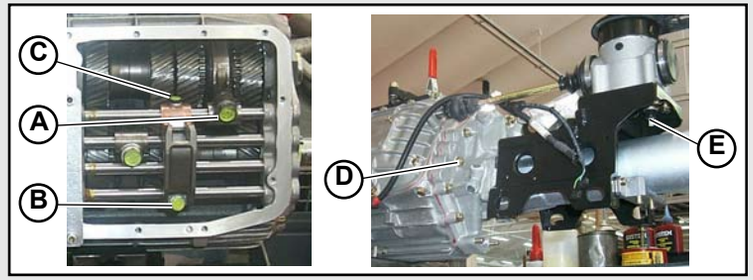
	A. fork screws	**64 ± 3%**	
	B. M8 tooth screws	**30 ± 3%**	
	C. M6 tooth screw	**14,5 ± 3%**	
	D. nuts on pump body	**25 ± 3%**	
	E. shift lever device screw	**29,4 ± 3%**	
3b	**Tightening torque rear differential**		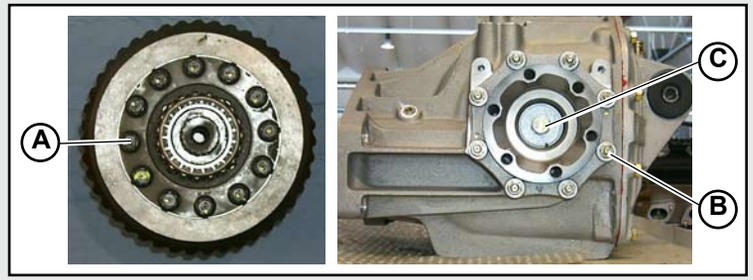
	A. Rear differential crown screw	**102 ± 3%**	
	B. nut on side flanges	**23 ± 3%**	
	C. screw on shaft hub	**100 ± 3%**	
3c	**Tightening torque of silentbloc fixing nut to the shift lever device support**		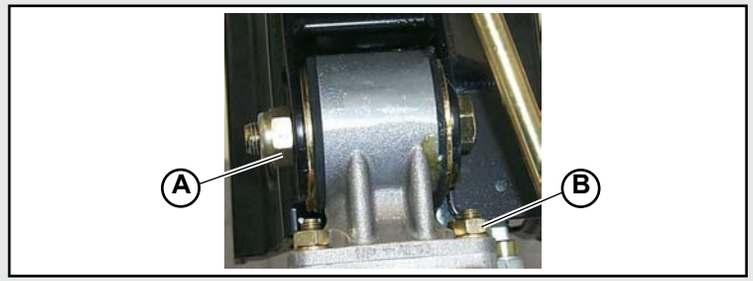
	A. silentbloc fixing nut	**50 ± 8%**	
	B. front body support nuts	**25 ± 3%**	
3d	**Tightening torque of the clutch housing to the gearbox**		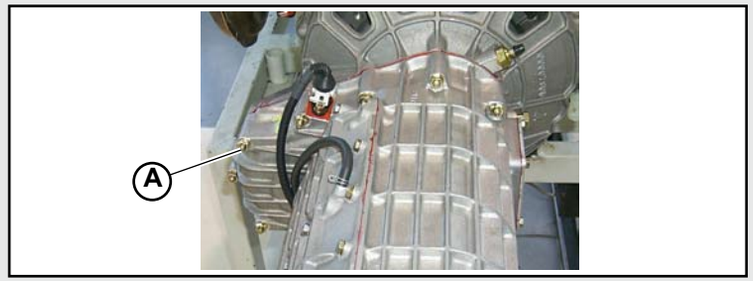
	A. clutch housing fixing nut	**25 ± 3%**	

® Automobili Lamborghini S.p.A.
The information and procedures published below are strictly confidential and exclusively for the Lamborghini Dealer Network and Authorized Service Points. All copyrights are property of Automobili Lamborghini S.p.A based on copyright law. All of the PDF chapters in the WEB workshop manuals described below are based on information available at the time of publication. The company reserves the right to make updates and modifications. The following are prohibited: reprinting, reproduction, forwarding to unauthorized people and/or third parties, and translation, including partial, without written authorization from Automobili Lamborghini S.p.A.

	DESCRIPTION	TIGHTENING TORQUE (Nm)	PICTURE
4a	**Tightening torque of the centring bushing and the oil gallery plug**		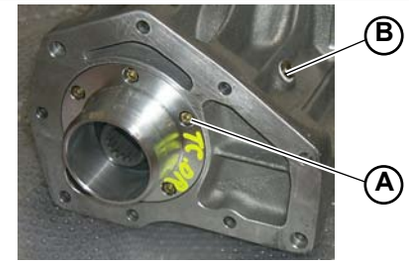
	A. centring bushing screw	**11 ± 3%**	
	B. oil gallery conical plug	**29,4 ± 3%**	
4b	**Tightening torque of the oil plugs and oil vent protective metal sheet**		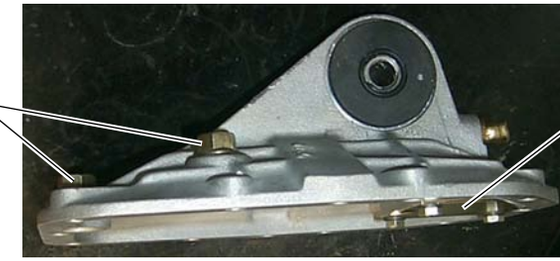
	A. level and drain plug	**45 ± 3%**	
	B. protective metal sheet screw	**8 ± 3%**	
4c	**Tightening torque of gearbox cover**		
	A. gearbox cover screw	**9 ± 3%**	
4d	**Tightening torque of transaxle pipe screws**		
	A. transaxle pipe screw at gearbox	**25 ± 3%**	

® Automobili Lamborghini S.p.A.
The information and procedures published below are strictly confidential and exclusively for the Lamborghini Dealer Network and Authorized Service Points. All copyrights are property of Automobili Lamborghini S.p.A based on copyright law. All of the PDF chapters in the WEB workshop manuals described below are based on information available at the time of publication. The company reserves the right to make updates and modifications. The following are prohibited: reprinting, reproduction, forwarding to unauthorized people and/or third parties, and translation, including partial, without written authorization from Automobili Lamborghini S.p.A.

	DESCRIPTION	TIGHTENING TORQUE (Nm)	PICTURE
5a	**Tightening torque of rear differential housing fixing nuts** **A.** Rear differential housing fixing nut. Post.	**60 ± 3%**	
5b	**Cooling system sleeve clamps** **A.** cooling sleeve clamp.	**5 ± 3%**	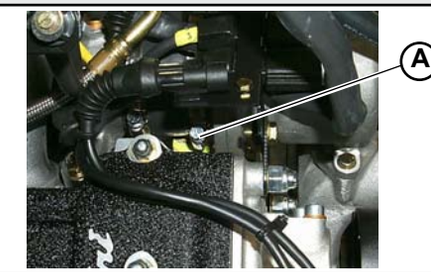
5c	**Tightening torque of nuts on flanged clutch bearing sleeve** **A.** flanged sleeve nut	**9 ± 3%**	
5d	**Tightening torque of gearbox oil filter fixing nuts** **A.** gearbox oil filter nut	**25 ± 3%**	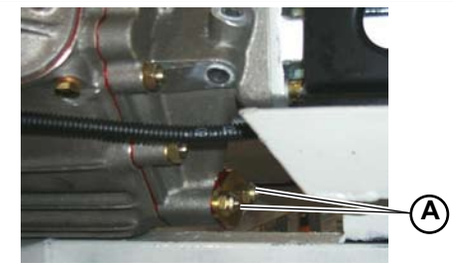

® Automobili Lamborghini S.p.A.
The information and procedures published below are strictly confidential and exclusively for the Lamborghini Dealer Network and Authorized Service Points. All copyrights are property of Automobili Lamborghini S.p.A based on copyright law. All of the PDF chapters in the WEB workshop manuals described below are based on information available at the time of publication. The company reserves the right to make updates and modifications. The following are prohibited: reprinting, reproduction, forwarding to unauthorized people and/or third parties, and translation, including partial, without written authorization from Automobili Lamborghini S.p.A.

	DESCRIPTION	TIGHTENING TORQUE (Nm)	PICTURE
6a	**Tightening torque front differential** **A.** Front differential crown screw **B.** screw on front differential cover **C.** screw on the viscous coupling cover	 **69 ± 3%** **25 ± 3%** **25 ± 3%**	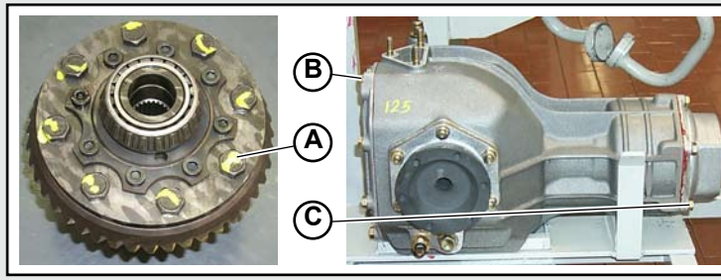
6b	**Tightening torque of the head nuts** Tighten the head fixing nuts with molikote	**40 - 70 - 95 ± 5%**	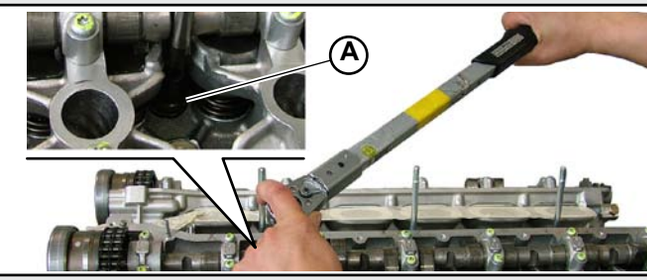
6c	**Assembling the A/C compressor** **A.** fixing nut	 **56 ± 5%**	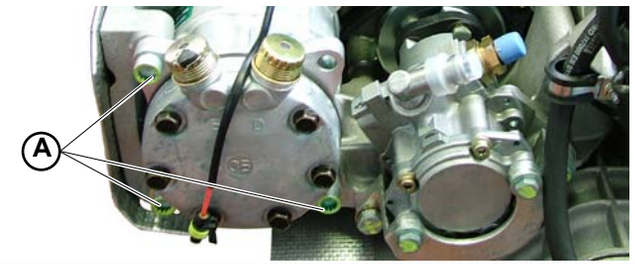
6d	**Assembling the power steering pump support frame, A/C compressor and alternator** **A.** screw	 **45 ± 5%**	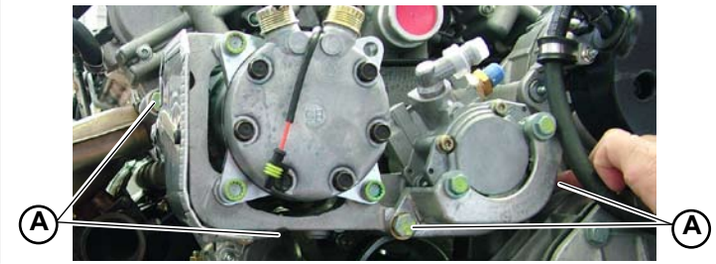

® Automobili Lamborghini S.p.A.
The information and procedures published below are strictly confidential and exclusively for the Lamborghini Dealer Network and Authorized Service Points. All copyrights are property of Automobili Lamborghini S.p.A based on copyright law. All of the PDF chapters in the WEB workshop manuals described below are based on information available at the time of publication. The company reserves the right to make updates and modifications. The following are prohibited: reprinting, reproduction, forwarding to unauthorized people and/or third parties, and translation, including partial, without written authorization from Automobili Lamborghini S.p.A.

	DESCRIPTION	TIGHTENING TORQUE (Nm)	PICTURE
7a	**Preassembling the water collection casing** Mark the tightened screw with a yellow permanent marker **A.** screw	**24 ± 5%**	
7b	**Assembling the guide pulley** Mark the tightened screw with a yellow permanent marker **A.** screw	**49 ± 5%**	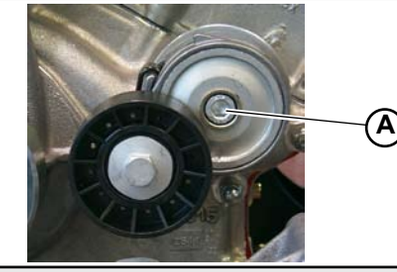
7c	**Preassembling the automatic tightener** **A.** pulley screw	**45 ± 5%**	
7d	**Assembling the Selespeed pipes** **A.** Tightening torque of unions **B.** Tightening torque of unions	**20-24** **20-24**	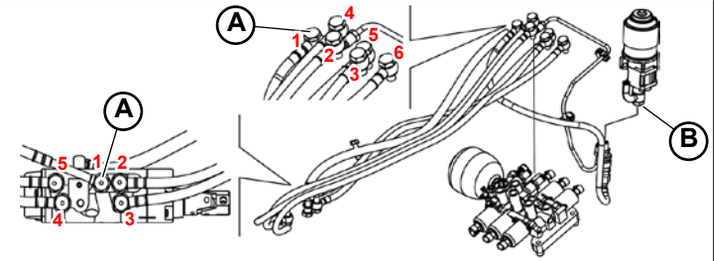

® Automobili Lamborghini S.p.A.
The information and procedures published below are strictly confidential and exclusively for the Lamborghini Dealer Network and Authorized Service Points. All copyrights are property of Automobili Lamborghini S.p.A based on copyright law. All of the PDF chapters in the WEB workshop manuals described below are based on information available at the time of publication. The company reserves the right to make updates and modifications. The following are prohibited: reprinting, reproduction, forwarding to unauthorized people and/or third parties, and translation, including partial, without written authorization from Automobili Lamborghini S.p.A.

	DESCRIPTION	TIGHTENING TORQUE (Nm)	PICTURE
8a	**Assembling the control rod on the e-gear gearbox cover** Mark the tightened screw with a yellow permanent marker **A.** fixing screw	**14,5 ± 3%**	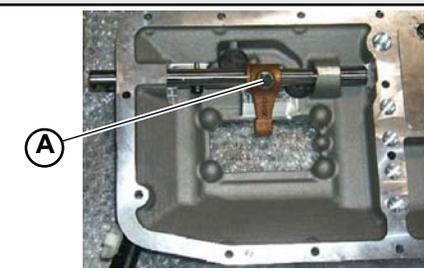
8b	**Preassembling the e-gear disk pusher** Mark the tightened screw with a yellow permanent marker **A.** screw (10456101)	**6 ± 5%**	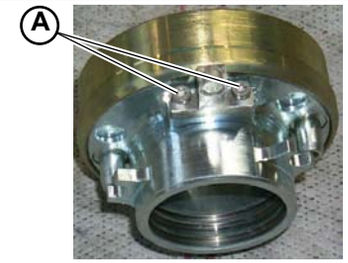
8c	**Tightening torque of oil sensor** **A.** Oil pressure sensor	**32 ± 5%**	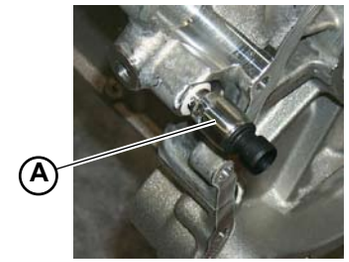
8d	**Tightening torque of e-gear actuator screw** Mark the tightened screw with a yellow permanent marker **A.** screw 8x35 mm (01024718) **B.** nut for screw (90226403)	**38**	

® Automobili Lamborghini S.p.A.
The information and procedures published below are strictly confidential and exclusively for the Lamborghini Dealer Network and Authorized Service Points. All copyrights are property of Automobili Lamborghini S.p.A based on copyright law. All of the PDF chapters in the WEB workshop manuals described below are based on information available at the time of publication. The company reserves the right to make updates and modifications. The following are prohibited: reprinting, reproduction, forwarding to unauthorized people and/or third parties, and translation, including partial, without written authorization from Automobili Lamborghini S.p.A.

	DESCRIPTION	TIGHTENING TORQUE (Nm)	PICTURE
9a	**Assembling the fuel pump** Before carrying out the final tightening procedure, position and assemble the screws (without fully tightening) according to the sequence outlined below: **A.** Screw	**4 ± 10%**	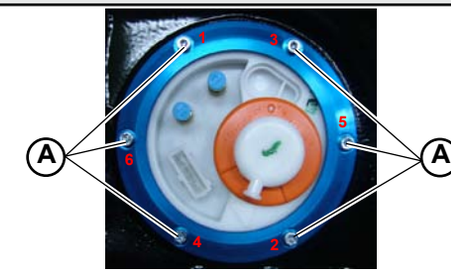
9b	**Tightening torque of front differential pinion ring nut** Mark the tightened screw with a yellow permanent marker **A.** Tightening torque of ring nut	**245 ± 5%**	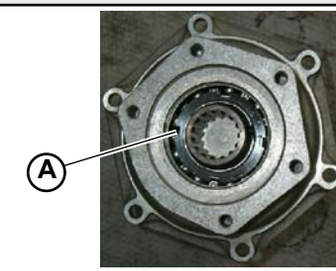
9c	**Tightening torque of engine crankcase** **A.** Tightening torque of screw (first tightening torque) Ø 12 mm **B.** Tightening torque of screw (second and last tightening torque) Ø 12 mm **C.** Tightening torque of screw Ø 8 mm	**40 ± 5%** **90 ± 5%** **30 ± 5%**	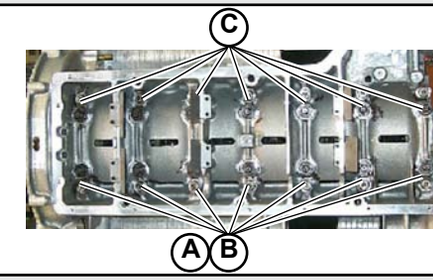
9d	**Tightening torque of timing chain cover** **A.** Tightening torque of screw **B.** Tightening torque of screw	**30 ± 5%** **28 ± 5%**	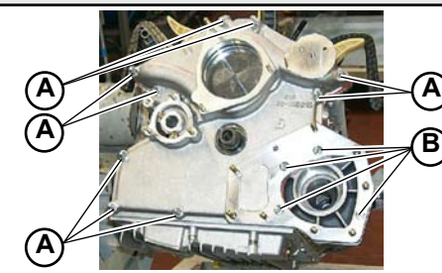

® Automobili Lamborghini S.p.A.
The information and procedures published below are strictly confidential and exclusively for the Lamborghini Dealer Network and Authorized Service Points. All copyrights are property of Automobili Lamborghini S.p.A based on copyright law. All of the PDF chapters in the WEB workshop manuals described below are based on information available at the time of publication. The company reserves the right to make updates and modifications. The following are prohibited: reprinting, reproduction, forwarding to unauthorized people and/or third parties, and translation, including partial, without written authorization from Automobili Lamborghini S.p.A.

	DESCRIPTION	TIGHTENING TORQUE (Nm)	PICTURE
10a	**Assembling the timing chain shoes** **A.** Tightening torque of screw	**30 ± 5%**	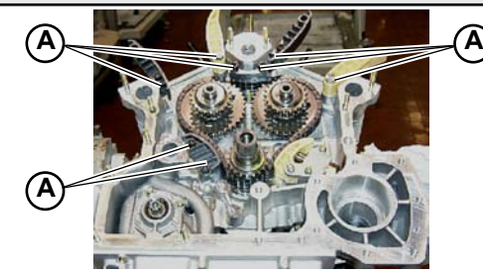
10b	**Assembling the e-gear gearbox pawls and forks** Mark the tightened screw with a yellow permanent marker **A.** tooth **B.** tooth **C.** tooth **D.** tooth	 **20 ± 3%** **29,4 ± 3%** **29,4 ± 3%** **29,4 ± 3%**	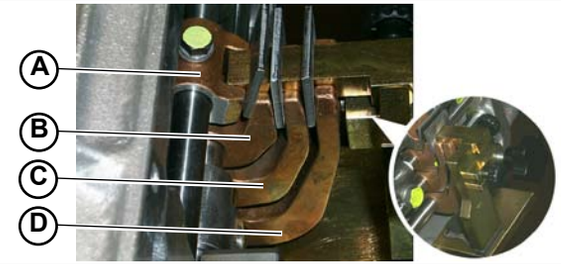
10c	**Assembling the e-gear gearbox pawls and forks** Mark the tightened screw with a yellow permanent marker After securing the screws to the teeth, tighten forks 1, 2 and 3 as follows: Using the tool, keep the teeth pressed down. Insert the screw in the fork but do not tighten. Using a marker, mark the stroke at one end first and then at the other end. Now tighten the fork in the middle of the two marks using the Atlas control unit. To tighten fork n. 4, keep the fork pressed down in the direction of the arrow so the clearance at the base of the fork is eliminated, then tighten.	**64 ± 3%**	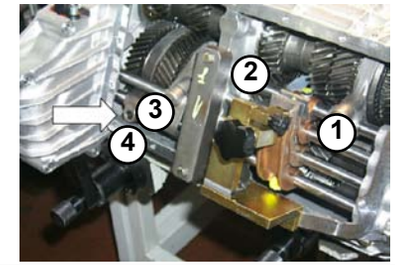
10d	**Assembling the side flanges** Use a yellow permanent marker to indicate it has been tightened **A.** nut	 **25 ± 5%**	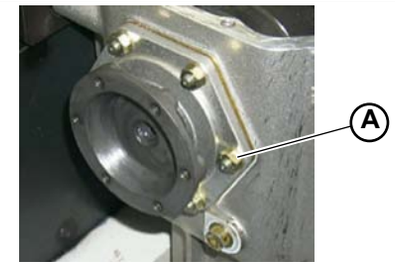

® Automobili Lamborghini S.p.A.
The information and procedures published below are strictly confidential and exclusively for the Lamborghini Dealer Network and Authorized Service Points. All copyrights are property of Automobili Lamborghini S.p.A based on copyright law. All of the PDF chapters in the WEB workshop manuals described below are based on information available at the time of publication. The company reserves the right to make updates and modifications. The following are prohibited: reprinting, reproduction, forwarding to unauthorized people and/or third parties, and translation, including partial, without written authorization from Automobili Lamborghini S.p.A.

	DESCRIPTION	TIGHTENING TORQUE (Nm)	PICTURE
11a	**Power steering oil pump delivery recovery** Use a yellow permanent marker to indicate it has been tightened **A.** tightening screw	**24 ± 5%**	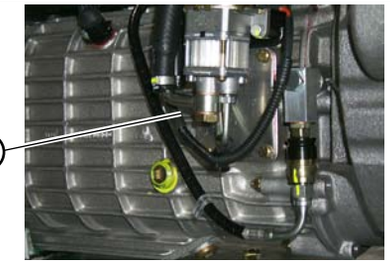
11b	**Tightening torque of engine oil filter** **A.** filter (001534857)	**18 ± 5%**	
11c	**Tightening torque of gearbox oil pump** **A.** tightening screw (008700614)	**11 ± 5%**	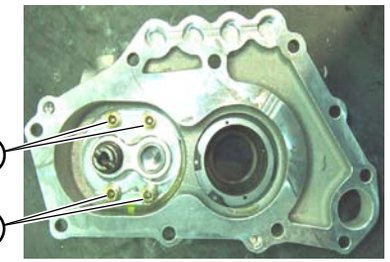
11d	**Tightening torque of support and actuator** **A.** tightening screw (008400801 – 008100826)) **B.** tightening screw (008700879)	**25 ± 3%** **20 ± 3%**	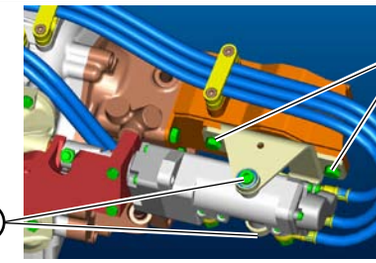

® Automobili Lamborghini S.p.A.
The information and procedures published below are strictly confidential and exclusively for the Lamborghini Dealer Network and Authorized Service Points. All copyrights are property of Automobili Lamborghini S.p.A based on copyright law. All of the PDF chapters in the WEB workshop manuals described below are based on information available at the time of publication. The company reserves the right to make updates and modifications. The following are prohibited: reprinting, reproduction, forwarding to unauthorized people and/or third parties, and translation, including partial, without written authorization from Automobili Lamborghini S.p.A.

	DESCRIPTION	TIGHTENING TORQUE (Nm)	PICTURE
12a	**Tightening torque of gear lever** **A.** Tightening torque (0024007767)	**10 ± 5%**	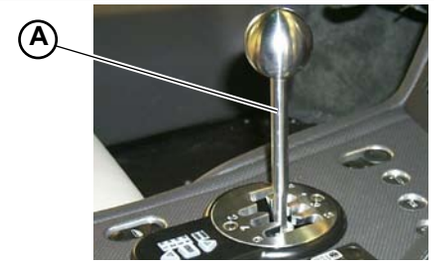
12b	**Securing the suspension to the front axle shaft** Once tightened, beat the nut (A) and apply yellow paint using the marker. **A.** Fixing nut	**345 ± 5%**	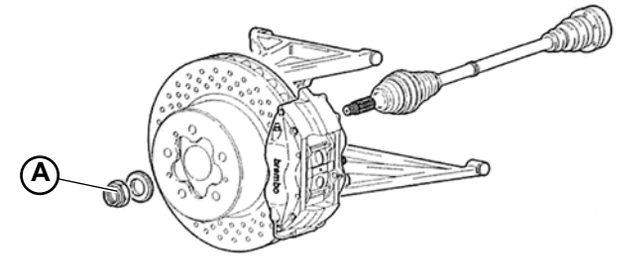
12c	**Pre-assembling the front suspension** **A.** Tightening torque **B.** Tightening torque **C.** Tightening torque **D.** Tightening torque **E.** Tightening torque	**490** **175 ± 5%** **62,5 ± 2,5%** **44** **115 ± 5%**	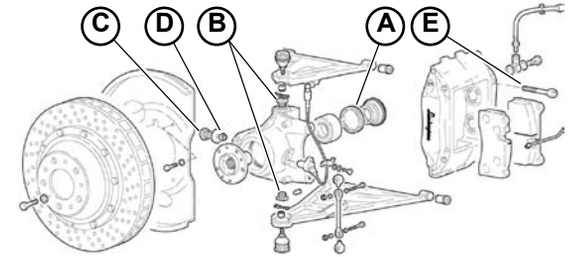
12d	**Pre-assembling the front suspension** **F.** Tightening torque **G.** Tightening torque **H.** Tightening torque **I.** Tightening torque	**18,5 ± 1,5%** **16 ± 2%** **69** **69**	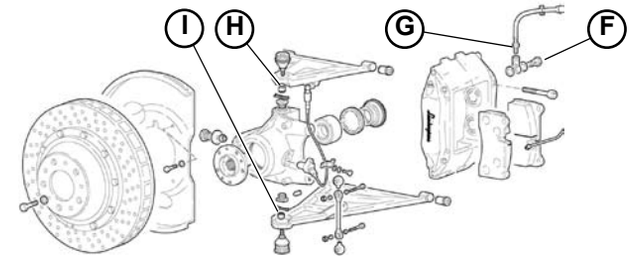

® Automobili Lamborghini S.p.A.
The information and procedures published below are strictly confidential and exclusively for the Lamborghini Dealer Network and Authorized Service Points. All copyrights are property of Automobili Lamborghini S.p.A based on copyright law. All of the PDF chapters in the WEB workshop manuals described below are based on information available at the time of publication. The company reserves the right to make updates and modifications. The following are prohibited: reprinting, reproduction, forwarding to unauthorized people and/or third parties, and translation, including partial, without written authorization from Automobili Lamborghini S.p.A.

	DESCRIPTION	TIGHTENING TORQUE (Nm)	PICTURE
13a	**Pre-assembling the rear suspension**		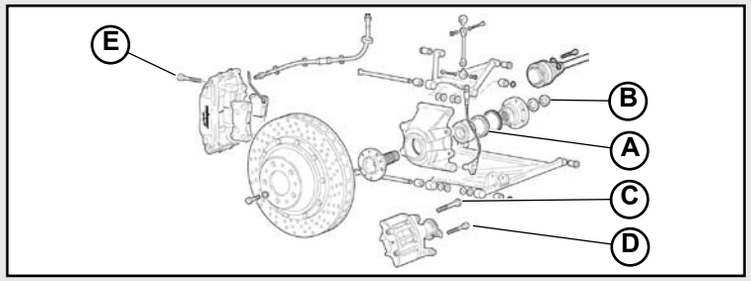
	A. Tightening torque	**490**	
	B. Tightening torque	**600**	
	C. Tightening torque	**47,5 ± 2,5%**	
	D. Tightening torque	**24 ± 1%**	
	E. Tightening torque	**115 ± 5%**	
13b	**Pre-assembling the rear suspension**		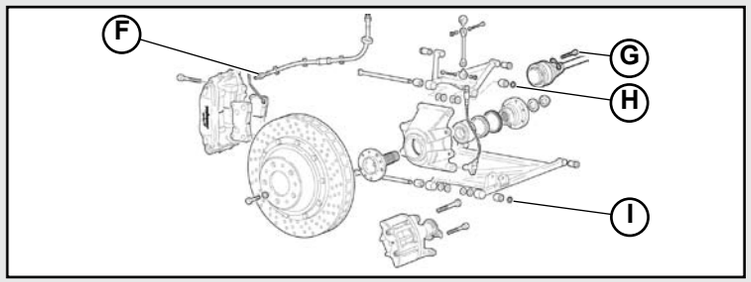
	F. Tightening torque	**16 ± 2%**	
	G. Tightening torque	**88**	
	H. Tightening torque	**140 ± 2%**	
	I. Tightening torque	**140 ± 2%**	
13c	**Assembling the front right/left suspension** Once tightened, apply yellow paint using the marker		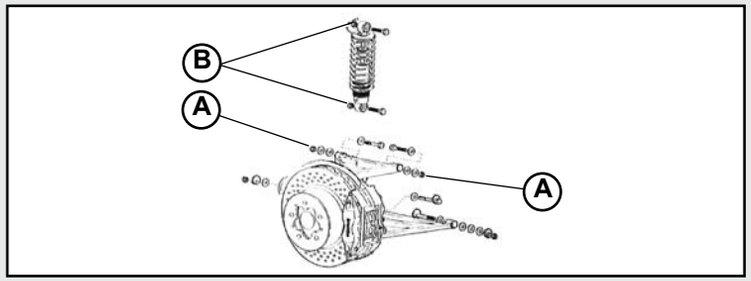
	A. Tightening torque	**85 ± 5%**	
	B. Tightening torque	**85 ± 5%**	
13d	**Assembling the rear right/left suspension** Once tightened, apply yellow paint using the marker		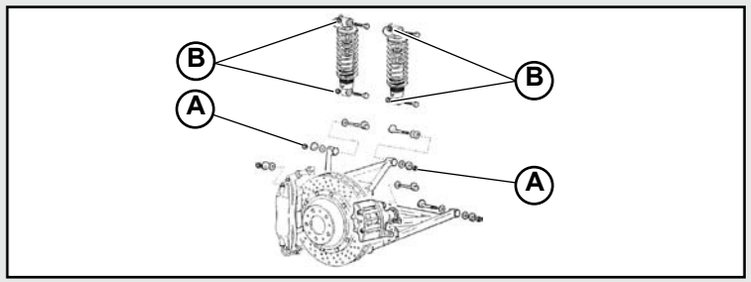
	A. Tightening torque	**85 ± 5%**	
	B. Tightening torque	**85 ± 5%**	

® Automobili Lamborghini S.p.A.
The information and procedures published below are strictly confidential and exclusively for the Lamborghini Dealer Network and Authorized Service Points. All copyrights are property of Automobili Lamborghini S.p.A based on copyright law. All of the PDF chapters in the WEB workshop manuals described below are based on information available at the time of publication. The company reserves the right to make updates and modifications. The following are prohibited: reprinting, reproduction, forwarding to unauthorized people and/or third parties, and translation, including partial, without written authorization from Automobili Lamborghini S.p.A.

	DESCRIPTION	TIGHTENING TORQUE (Nm)	PICTURE
14a	**Assembling the ABS control unit** Once tightened, apply yellow paint to the nuts and bolts using the special marker		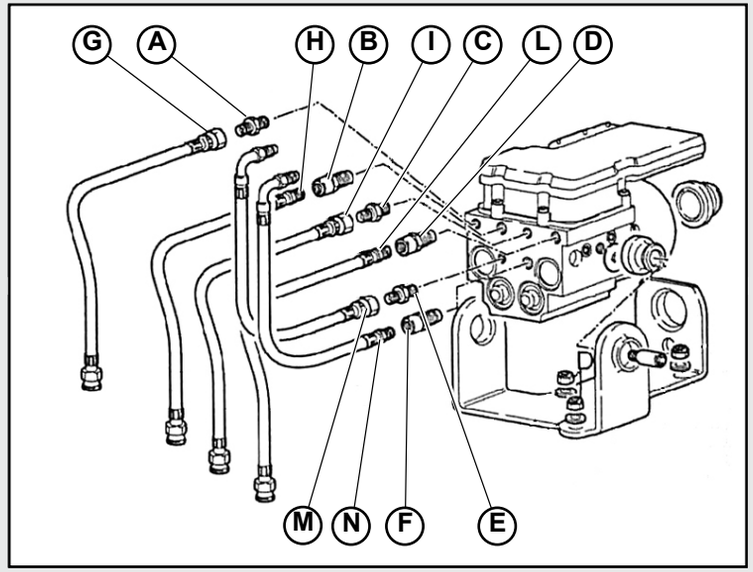
	A. Tightening torque	**20 ± 2%**	
	B. Tightening torque	**24 ± 2%**	
	C. Tightening torque	**20 ± 2%**	
	D. Tightening torque	**24 ± 2%**	
	E. Tightening torque	**20 ± 2%**	
	F. Tightening torque	**24 ± 2%**	
14b	**Assembling the ABS control unit** Once tightened, apply yellow paint to the nuts and bolts using the special marker		
	G. Tightening torque	**20 ± 2%**	
	H. Tightening torque	**24 ± 2%**	
	I. Tightening torque	**20 ± 2%**	
	L. Tightening torque	**24 ± 2%**	
	M. Tightening torque	**20 ± 2%**	
	N. Tightening torque	**24 ± 2%**	
14c	**Assembling the petrol pipes from the filters to the injector holder pipes** Once tightened, apply yellow paint to the unions using the special marker		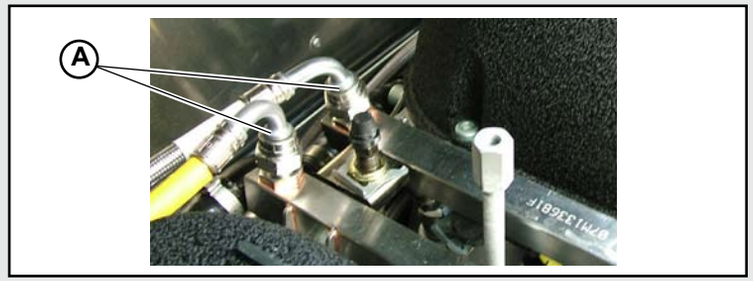
	A. Tightening torque of unions	**25 ± 5%**	
14d	**Tightening torque of door striker plate**		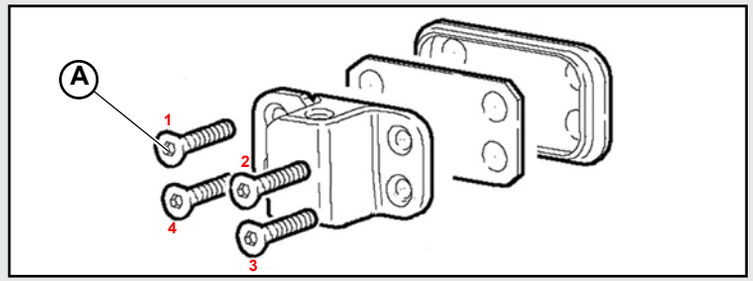
	A. Tightening torque of screws	**8,5 ± 0,5%**	

® Automobili Lamborghini S.p.A.
The information and procedures published below are strictly confidential and exclusively for the Lamborghini Dealer Network and Authorized Service Points. All copyrights are property of Automobili Lamborghini S.p.A based on copyright law. All of the PDF chapters in the WEB workshop manuals described below are based on information available at the time of publication. The company reserves the right to make updates and modifications. The following are prohibited: reprinting, reproduction, forwarding to unauthorized people and/or third parties, and translation, including partial, without written authorization from Automobili Lamborghini S.p.A.

	DESCRIPTION	TIGHTENING TORQUE (Nm)	PICTURE
15a	**Check the tightening torque of the lifting system assembly**		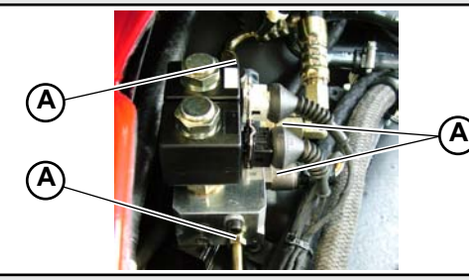
	A. Nut for oil manifold on the flow separator	**37**	
	A. Nut for oil manifold on the valve unit	**37**	
	A. Nut for pipe on the flow separator	**37**	
	A. Nut for pipe on the valve unit	**37**	
15b	**Assembling the driver airbag module**		
	A. Tightening torque of screw	**8 ± 5%**	
15c	**Assembling the steering wheel in the car** After tightening, mark with yellow paint		
	A. Tightening torque	**50 ± 5%**	
15d	**Assembling the seats** Once tightened, apply yellow paint using the special marker		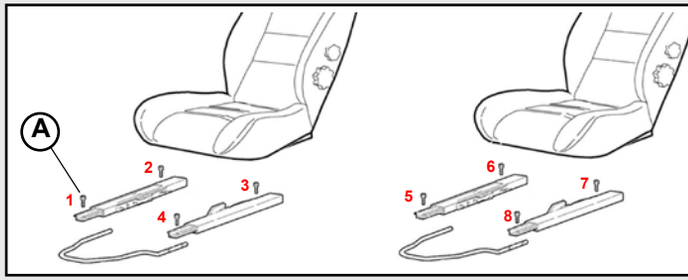
	A. Tightening torque of seats	**23 ± 8%**	

® Automobili Lamborghini S.p.A.
The information and procedures published below are strictly confidential and exclusively for the Lamborghini Dealer Network and Authorized Service Points. All copyrights are property of Automobili Lamborghini S.p.A based on copyright law. All of the PDF chapters in the WEB workshop manuals described below are based on information available at the time of publication. The company reserves the right to make updates and modifications. The following are prohibited: reprinting, reproduction, forwarding to unauthorized people and/or third parties, and translation, including partial, without written authorization from Automobili Lamborghini S.p.A.

	DESCRIPTION	TIGHTENING TORQUE (Nm)	PICTURE
16a	**Assembling the steering column** Once tightened, apply yellow paint to the nuts and bolts using the special marker **A.** Tightening torque of nuts	**20 ± 5%**	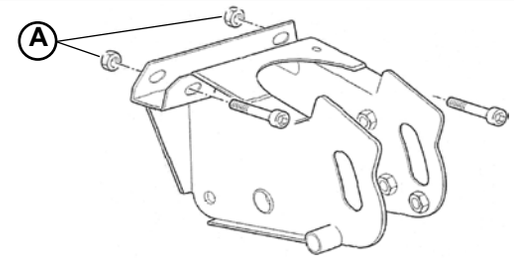
16b	**Assembling the pedal cluster** Once tightened, apply yellow paint to the nuts and bolts using the special marker **A.** Tightening torque of nuts	**20**	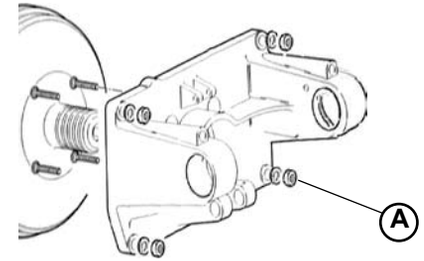
16c	**Assembling the steering rack** Once tightened, apply yellow paint to the screws using the special marker **A.** Tightening torque of screws	**39 ± 5%**	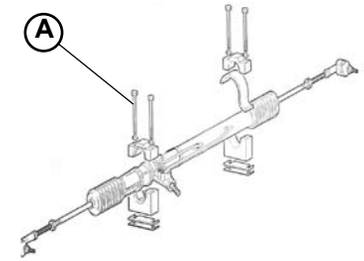
16d	**Power steering oil tank unions** **A.** Tightening torque of union **B.** Tightening torque of union	**37 ± 5%** **37 ± 5%**	

® Automobili Lamborghini S.p.A.
The information and procedures published below are strictly confidential and exclusively for the Lamborghini Dealer Network and Authorized Service Points. All copyrights are property of Automobili Lamborghini S.p.A based on copyright law. All of the PDF chapters in the WEB workshop manuals described below are based on information available at the time of publication. The company reserves the right to make updates and modifications. The following are prohibited: reprinting, reproduction, forwarding to unauthorized people and/or third parties, and translation, including partial, without written authorization from Automobili Lamborghini S.p.A.

	DESCRIPTION	TIGHTENING TORQUE (Nm)	PICTURE
17a	**Assembling the passenger airbag module** Once tightened, apply yellow paint to the nuts and bolts using the special marker **A.** Tightening torque of screws	**8 ± 8%**	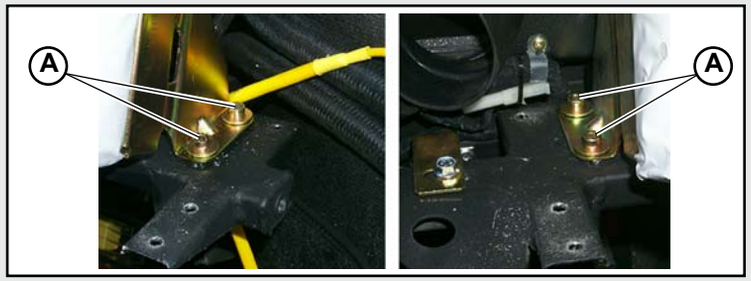
17b	**Assembling the steering column on the steering box** Once tightened, apply yellow paint to the nuts and bolts using the special marker **A.** Tightening torque of screws	**27**	
17c	**Assembling the steering rack and the steering column shaft** Once tightened, apply yellow paint to the nuts and bolts using the special marker **A.** Tightening torque of screws **B.** Tightening torque of screws	**27 ± 5%** **27 ± 5%**	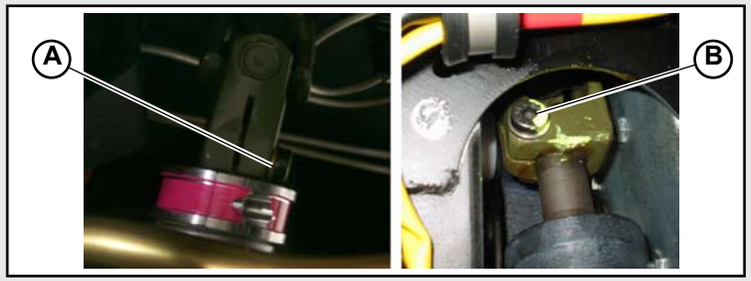
17d	**Assembling the seatbelt support and buckle** Once tightened, apply yellow paint to the nuts and bolts using the special marker **A.** Tightening torque of screws **B.** Tightening torque of screws	**24,5 ± 5%** **49 ± 5%**	

® Automobili Lamborghini S.p.A.
The information and procedures published below are strictly confidential and exclusively for the Lamborghini Dealer Network and Authorized Service Points. All copyrights are property of Automobili Lamborghini S.p.A based on copyright law. All of the PDF chapters in the WEB workshop manuals described below are based on information available at the time of publication. The company reserves the right to make updates and modifications. The following are prohibited: reprinting, reproduction, forwarding to unauthorized people and/or third parties, and translation, including partial, without written authorization from Automobili Lamborghini S.p.A.

	DESCRIPTION	TIGHTENING TORQUE (Nm)	PICTURE
18a	**Assembling the seatbelts (seatbelt retractors)** Once tightened, apply yellow paint to the nuts and bolts using the special marker **A.** Tightening torque of screws	**49 ± 5%**	
18b	**Assembling the seatbelts** Once tightened, apply yellow paint to the nuts and bolts using the special marker **A.** Tightening torque of screws	**49 ± 5%**	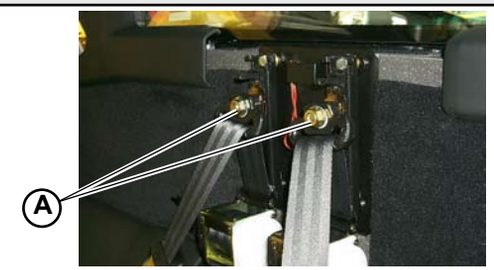
18c	**Assembling the windscreen wiper arm** **A.** Tightening torque of nut (settling) **B.** Tightening torque of nut (fixing)	**22 ± 5%** **25 ± 5%**	
18d	**Securing the rear differential brackets** **A.** Tightening torque of screw (008201416) **B.** Tightening torque of screw (008101430) **C.** Tightening torque of screw (008100862)	**50 ± 8%** **50 ± 8%** **25 ± 8%**	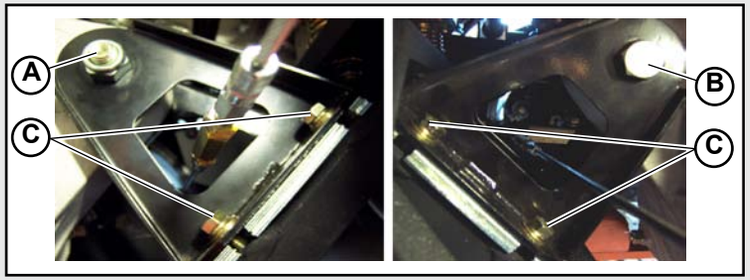

® Automobili Lamborghini S.p.A.
The information and procedures published below are strictly confidential and exclusively for the Lamborghini Dealer Network and Authorized Service Points. All copyrights are property of Automobili Lamborghini S.p.A based on copyright law. All of the PDF chapters in the WEB workshop manuals described below are based on information available at the time of publication. The company reserves the right to make updates and modifications. The following are prohibited: reprinting, reproduction, forwarding to unauthorized people and/or third parties, and translation, including partial, without written authorization from Automobili Lamborghini S.p.A.

	DESCRIPTION	TIGHTENING TORQUE (Nm)	PICTURE
19a	**Assembling the front axle shafts** Once tightened, apply yellow paint to the nuts and bolts using the special marker		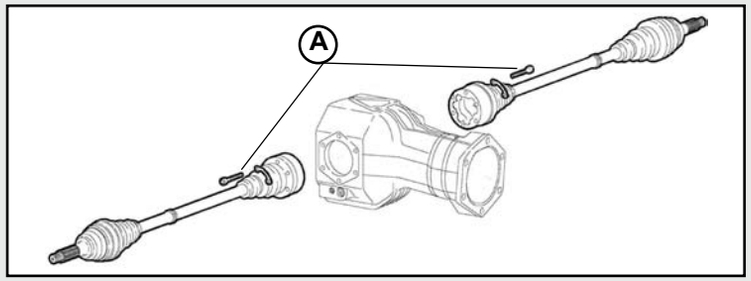
	A. Tightening torque of screws	**38 ± 5%**	
19b	**Pre-assembling the petrol tank**		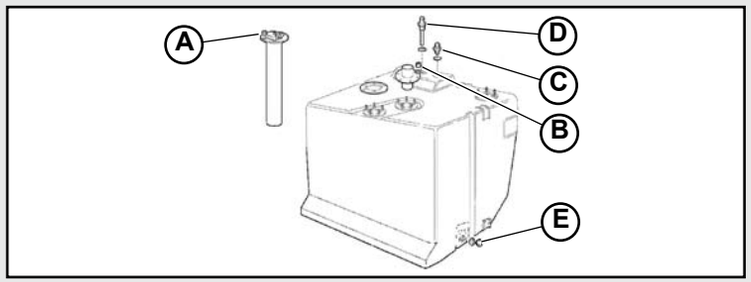
	A. Tightening torque	**4 ± 5%**	
	B. Tightening torque	**5 ± 5%**	
	C. Tightening torque	**25 ± 5%**	
	D. Tightening torque	**45 ± 5%**	
	E. Tightening torque	**35 ± 5%**	
19c	**Assembling the petrol filler on the right bumper**		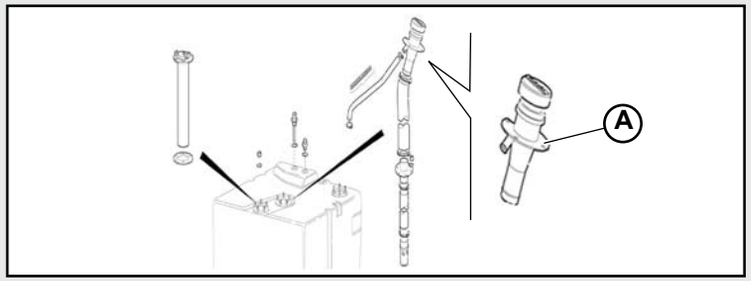
	A. Tightening torque of screws	**5 ± 5%**	
19d	**Pre-assembling the oil tank**		
	A. Tightening torque of union with filter (0015009734)	**90 ± 5%**	
	B. Tightening torque of oil pipe union (001529610)	**75 ± 5%**	
	C. Tightening torque of temperature sensor (07L919501A)	**15 ± 5%**	
	D. Tightening torque of the plug (0015009735)	**40 ± 5%**	
	E. Tightening torque of oil drain plug (400131737)	**40 ± 5%**	

® Automobili Lamborghini S.p.A.
The information and procedures published below are strictly confidential and exclusively for the Lamborghini Dealer Network and Authorized Service Points. All copyrights are property of Automobili Lamborghini S.p.A based on copyright law. All of the PDF chapters in the WEB workshop manuals described below are based on information available at the time of publication. The company reserves the right to make updates and modifications. The following are prohibited: reprinting, reproduction, forwarding to unauthorized people and/or third parties, and translation, including partial, without written authorization from Automobili Lamborghini S.p.A.

	DESCRIPTION	TIGHTENING TORQUE (Nm)	PICTURE
20a	**Assembling the mobile air vents** **A.** Tightening torque of flanged screw (0087000700)	**10 ± 5%**	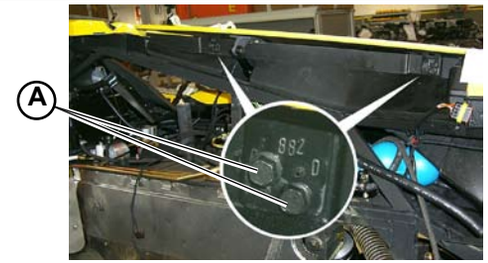
20b	**Phase transformer tightening** **A.** Mounting screws dia 6 mm	**140 ± 5%**	
20c	**Assembling the brake pipes** **A.** Tightening torque of pipe unions	**16 ± 5%**	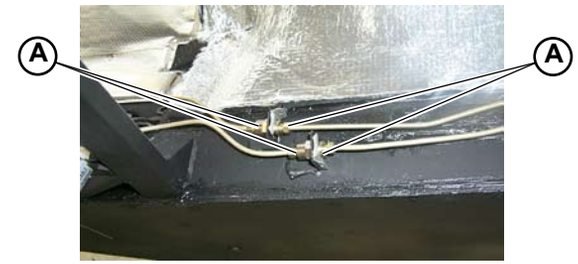
20d	**Connecting the flexible hoses from the ABS control unit to the pipes and clamping to the bracket on the chassis** Once tightened, apply yellow paint to the nuts and bolts using the special marker **A.** Tightening torque of pipe unions	**16 ± 5%**	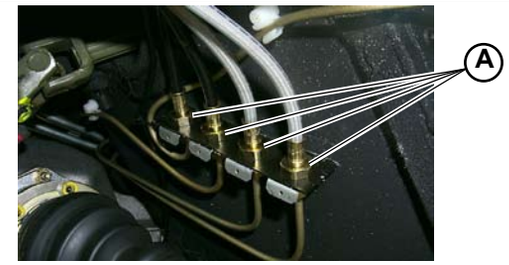

® Automobili Lamborghini S.p.A.
The information and procedures published below are strictly confidential and exclusively for the Lamborghini Dealer Network and Authorized Service Points. All copyrights are property of Automobili Lamborghini S.p.A based on copyright law. All of the PDF chapters in the WEB workshop manuals described below are based on information available at the time of publication. The company reserves the right to make updates and modifications. The following are prohibited: reprinting, reproduction, forwarding to unauthorized people and/or third parties, and translation, including partial, without written authorization from Automobili Lamborghini S.p.A.

	DESCRIPTION	TIGHTENING TORQUE (Nm)	PICTURE
21a	**Assembling the brake caliper hoses** Once tightened, apply yellow paint using the special marker **A.** Tightening torque of pipe unions	**16 ± 5%**	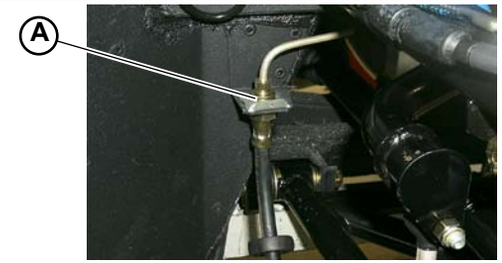
21b	**Assembling the brake caliper hoses** Once tightened, apply yellow paint using the special marker **A.** Tightening torque of pipe unions	**16 ± 5%**	
21c	**Assembling the front bonnet lock** **A.** Tightening torque of nut (008200614)	**8 ± 5%**	
21d	**Tightening torque of wheel screws** **A.** Tightening torque of the front and rear wheel bolts (WHT001162)	**160 ± 5%**	

® Automobili Lamborghini S.p.A.
The information and procedures published below are strictly confidential and exclusively for the Lamborghini Dealer Network and Authorized Service Points. All copyrights are property of Automobili Lamborghini S.p.A based on copyright law. All of the PDF chapters in the WEB workshop manuals described below are based on information available at the time of publication. The company reserves the right to make updates and modifications. The following are prohibited: reprinting, reproduction, forwarding to unauthorized people and/or third parties, and translation, including partial, without written authorization from Automobili Lamborghini S.p.A.

	DESCRIPTION	TIGHTENING TORQUE (Nm)	PICTURE
22a	**Assembling the accelerator pedal**		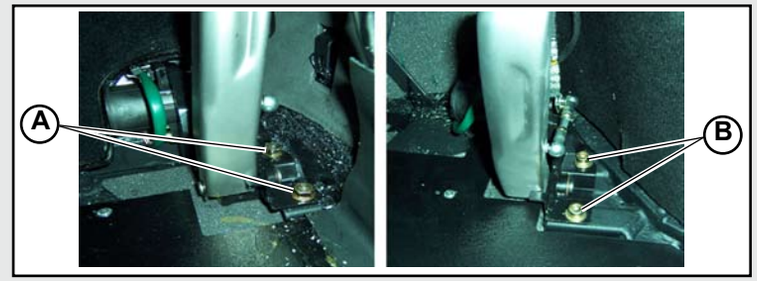
	A. Tightening torque of nuts (008200824) on LEFT HAND drive cars	**20 ± 5%**	
	B. Tightening torque of screws (008700811) on RIGHT HAND drive cars	**20 ± 5%**	
22b	**Assembling the engine supports**		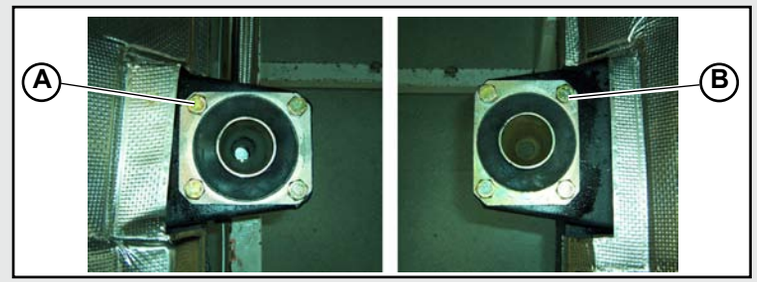
	A. Tightening torque of screws (008101031) on the LEFT side	**49 ± 5%**	
	B. Tightening torque of screws (008101031) on the RIGHT side	**49 ± 5%**	
22c	**Assembling the petrol return pipe to the tank**		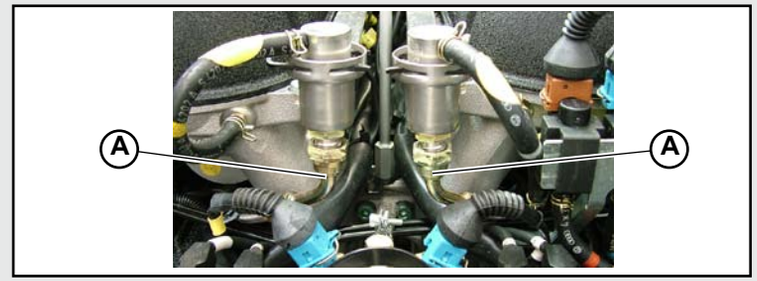
	A. Tightening torque of union	**19 ± 5%**	
22d	**Assembling the power steering pipes on the steering box**		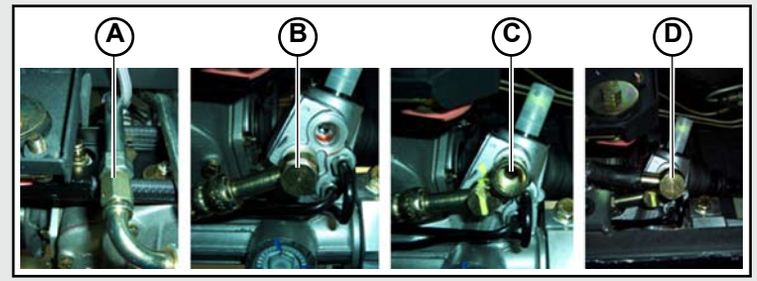
	A. Tightening torque of union	**30 ± 5%**	
	B. Tightening torque of screw (400422269A)	**36 ± 5%**	
	C. Tightening torque of union (004033458)	**36 ± 5%**	
	D. Tightening torque of union (400422279A)	**36 ± 5%**	

® Automobili Lamborghini S.p.A.
The information and procedures published below are strictly confidential and exclusively for the Lamborghini Dealer Network and Authorized Service Points. All copyrights are property of Automobili Lamborghini S.p.A based on copyright law. All of the PDF chapters in the WEB workshop manuals described below are based on information available at the time of publication. The company reserves the right to make updates and modifications. The following are prohibited: reprinting, reproduction, forwarding to unauthorized people and/or third parties, and translation, including partial, without written authorization from Automobili Lamborghini S.p.A.

	DESCRIPTION	TIGHTENING TORQUE (Nm)	PICTURE
23a	**Assembling the power brake on the pedal cluster support** **A.** Tightening torque of screw **23 ± 5%**		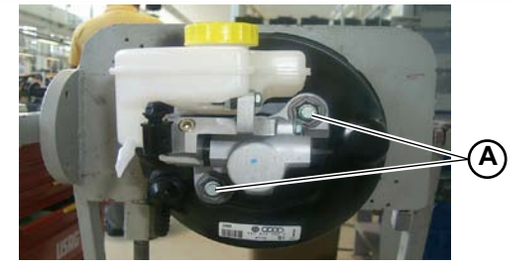
23b	**Connecting the power brake pipe** **A.** Tightening torque of clamp (008831117)	**7 ± 8%**	
23c	**Assembling the clutch pump and connecting the pipe** FOR CARS WITH MANUAL GEAR CHANGE ONLY **A.** Tightening torque of nut M8 (008200801) **B.** Tightening torque of union	**20 ± 5%** **17 ± 5%**	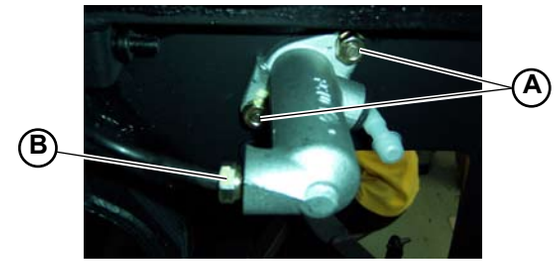
23d	**Connecting the A/C pipes to the compressor** **A.** Tightening torque of union	**36,3 ± 5%**	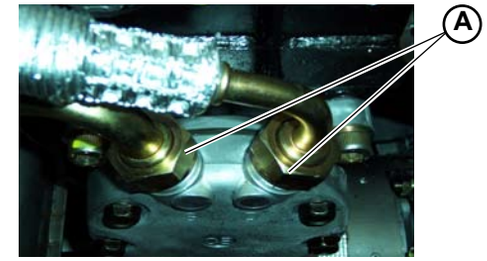

® Automobili Lamborghini S.p.A.
The information and procedures published below are strictly confidential and exclusively for the Lamborghini Dealer Network and Authorized Service Points. All copyrights are property of Automobili Lamborghini S.p.A based on copyright law. All of the PDF chapters in the WEB workshop manuals described below are based on information available at the time of publication. The company reserves the right to make updates and modifications. The following are prohibited: reprinting, reproduction, forwarding to unauthorized people and/or third parties, and translation, including partial, without written authorization from Automobili Lamborghini S.p.A.

	DESCRIPTION	TIGHTENING TORQUE (Nm)	PICTURE
24a	**Connecting the power steering pipes to the pump** **A.** Tightening torque of union	**37 ± 5%**	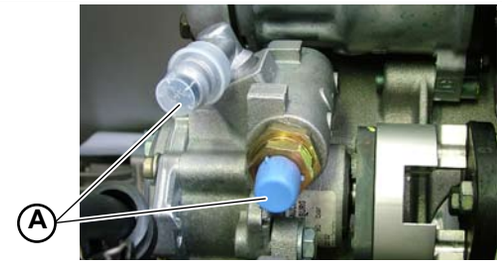
24b	**Assembling the hand brake lever** **A.** Tightening torque of nut (N 01118312)	**8 ± 5%**	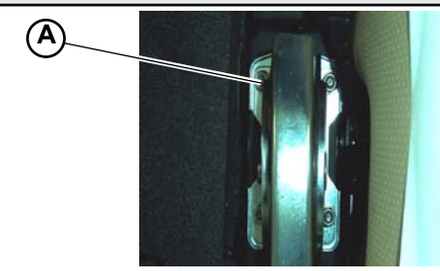
24c	**Assembling the oil tank on the chassis** **A.** Tightening torque of bolts	**5 ± 5%**	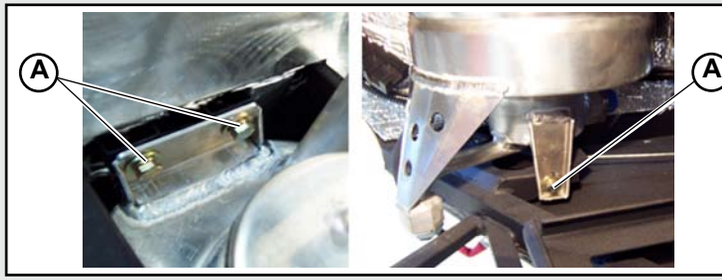
24d	**Assembling the front anti-roll bar supports** **A.** Tightening torque of bolts (008700683)	**10 ± 5%**	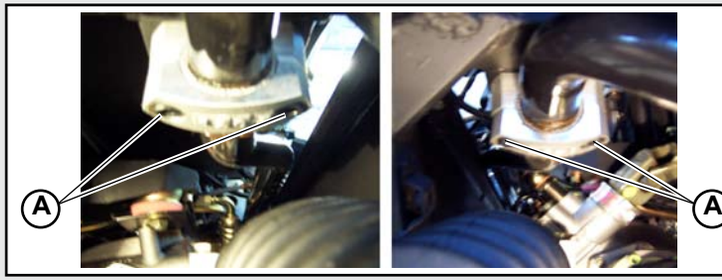

® Automobili Lamborghini S.p.A.
The information and procedures published below are strictly confidential and exclusively for the Lamborghini Dealer Network and Authorized Service Points. All copyrights are property of Automobili Lamborghini S.p.A based on copyright law. All of the PDF chapters in the WEB workshop manuals described below are based on information available at the time of publication. The company reserves the right to make updates and modifications. The following are prohibited: reprinting, reproduction, forwarding to unauthorized people and/or third parties, and translation, including partial, without written authorization from Automobili Lamborghini S.p.A.

	DESCRIPTION	TIGHTENING TORQUE (Nm)	PICTURE
25a	**Assembling the power brake vacuum tank on the bracket** **A.** Tightening torque of M5 nuts (WHT000760)	**7 ± 5%**	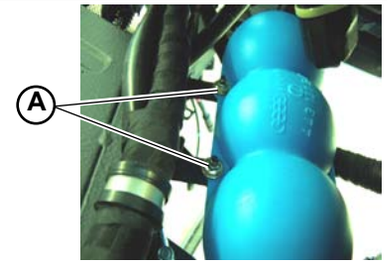
25b	**Assembling the petrol filling sleeve on the tank** **A.** Tightening torque of clamp **3 ± 5%**		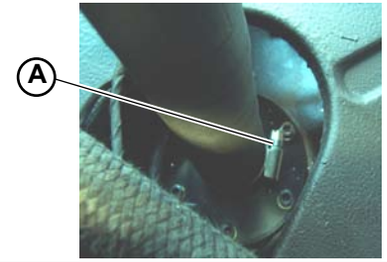
25c	**Fixing the engine crankcase tot the chassis** **A.** Tightening torque of screws (0041010185)	**80 ± 5%**	
25d	**Assembling the rear anti-roll bar supports** **A.** Tightening torque of bolts (008700683)	**10 ± 5%**	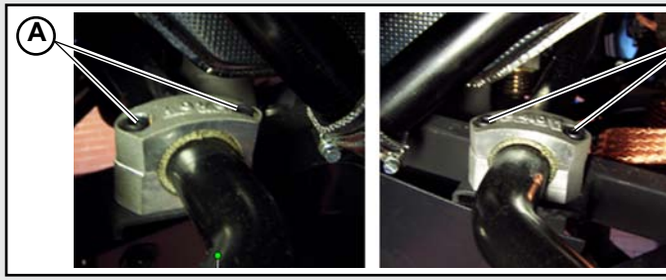

® Automobili Lamborghini S.p.A.
The information and procedures published below are strictly confidential and exclusively for the Lamborghini Dealer Network and Authorized Service Points. All copyrights are property of Automobili Lamborghini S.p.A based on copyright law. All of the PDF chapters in the WEB workshop manuals described below are based on information available at the time of publication. The company reserves the right to make updates and modifications. The following are prohibited: reprinting, reproduction, forwarding to unauthorized people and/or third parties, and translation, including partial, without written authorization from Automobili Lamborghini S.p.A.

	DESCRIPTION	TIGHTENING TORQUE (Nm)	PICTURE
26a	**Connecting the vacuum pipes to the left/right supply manifold** **A.** Tightening torque of clamp (008831117) RIGHT SIDE **B.** Tightening torque of clamp (008831117) LEFT SIDE	 **5 ± 8%** **5 ± 8%**	
26b	**Connecting the oil pipes to the engine** After tightening, mark with yellow paint **A.** Tightening torque of nut	 **90 ± 5%**	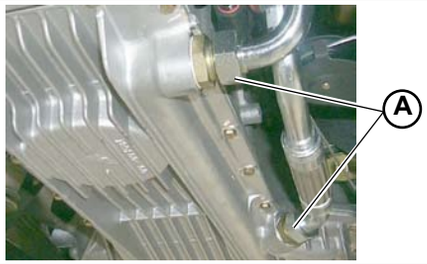
26c	**Tightening torque of the front differential on the support** After tightening, mark with yellow paint **A.** Tightening torque of nut	 **25 ± 5%**	
26d	**Connection and tightening torque of rear axle shafts** Tighten the screws two at a time on the same washer **A. 1.** Pre-torque of screw **2.** Tightening torque of screw (008701229)	 **15 ± 3%** **88 ± 8%**	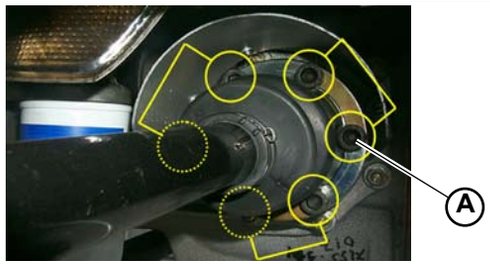

® Automobili Lamborghini S.p.A.
The information and procedures published below are strictly confidential and exclusively for the Lamborghini Dealer Network and Authorized Service Points. All copyrights are property of Automobili Lamborghini S.p.A based on copyright law. All of the PDF chapters in the WEB workshop manuals described below are based on information available at the time of publication. The company reserves the right to make updates and modifications. The following are prohibited: reprinting, reproduction, forwarding to unauthorized people and/or third parties, and translation, including partial, without written authorization from Automobili Lamborghini S.p.A.

	DESCRIPTION	TIGHTENING TORQUE (Nm)	PICTURE
27a	**Connection and tightening torque of the lifting system pipes on the front shock absorbers** After tightening, mark with yellow paint **A.** Tightening torque of union (WHT000861)	**18 ± 5%**	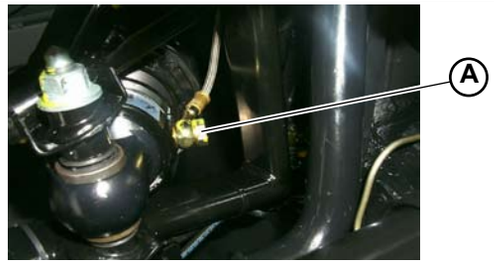
27b	**Assembling the clutch flexible hose** **A.** Tightening torque of union **35 ± 8%** **B.** Tightening torque of union nut (008201216)	**17 ± 8%**	
27c	**Securing the gear lever device on the chassis** After tightening, mark with yellow paint **A.** Tightening torque of screw M8x1,5x35 (008100862)	**25 ± 5%**	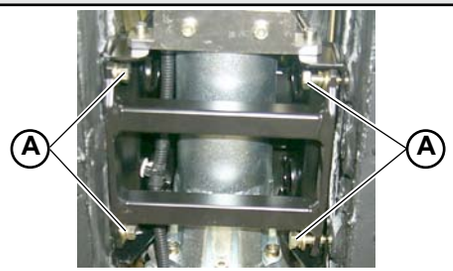
27d	**Connecting the tie rods to the rear suspensions** **A.** Tightening torque of bolt **B.** Tightening torque of nut	**25 ± 5%** **25 ± 5%**	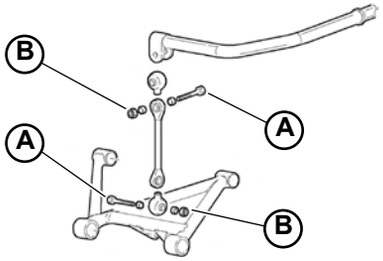

® Automobili Lamborghini S.p.A.
The information and procedures published below are strictly confidential and exclusively for the Lamborghini Dealer Network and Authorized Service Points. All copyrights are property of Automobili Lamborghini S.p.A based on copyright law. All of the PDF chapters in the WEB workshop manuals described below are based on information available at the time of publication. The company reserves the right to make updates and modifications. The following are prohibited: reprinting, reproduction, forwarding to unauthorized people and/or third parties, and translation, including partial, without written authorization from Automobili Lamborghini S.p.A.

	DESCRIPTION	TIGHTENING TORQUE (Nm)	PICTURE
28a	**Securing the drive shaft to the front differential** After tightening, mark with yellow paint **A.** Tightening torque of screw M8 (008700811)	**25 ± 5%**	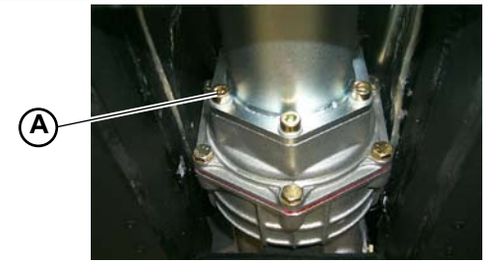
28b	**Connecting the tie rods to the front suspensions** **A.** Tightening torque of bolt **B.** Tightening torque of nut	**25 ± 5%** **25 ± 5%**	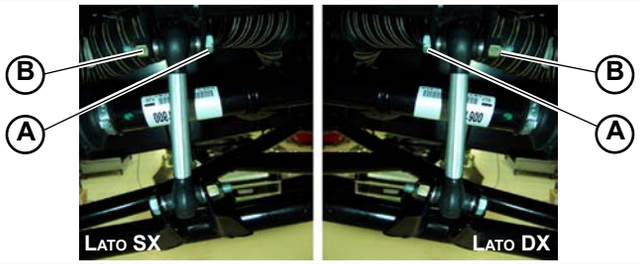
28c	**Assembling the auxiliary belt pulley** **A.** Tightening torque of bolts	**145**	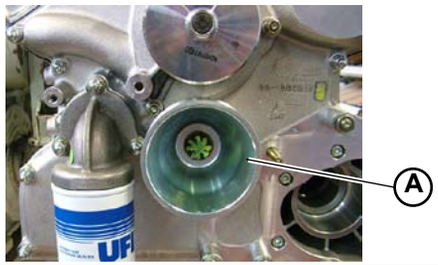
28d	**Assembling the engine hood piston support plate** **A.** Tightening torque of screw	**12 ± 5%**	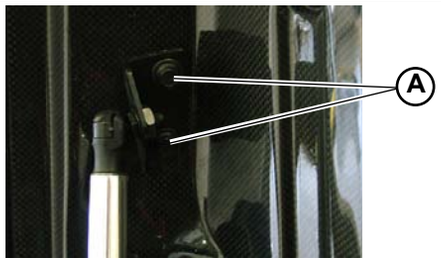

® Automobili Lamborghini S.p.A.
The information and procedures published below are strictly confidential and exclusively for the Lamborghini Dealer Network and Authorized Service Points. All copyrights are property of Automobili Lamborghini S.p.A based on copyright law. All of the PDF chapters in the WEB workshop manuals described below are based on information available at the time of publication. The company reserves the right to make updates and modifications. The following are prohibited: reprinting, reproduction, forwarding to unauthorized people and/or third parties, and translation, including partial, without written authorization from Automobili Lamborghini S.p.A.

	DESCRIPTION	TIGHTENING TORQUE (Nm)	PICTURE
29a	**Assembling the engine hood** **A.** Tightening torque of screw M6x12 (008700700)	**10 ± 5%**	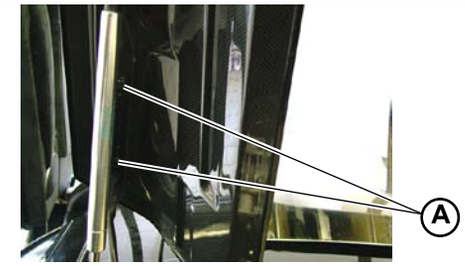
29b	**Assembling the airbag control unit** Once tightened, apply yellow paint to the nuts using the special marker **A.** Control unit fixing nuts	**8 ± 8%**	
29c	**Pre-assembling the silencer cover hood** **A.** Tightening torque of screw M6x12 (008700700) **B.** Tightening torque of screw M8x20 (008740833) **C.** Tightening torque of screw	**10 ± 8%** **12 ± 8%** **12 ± 8%**	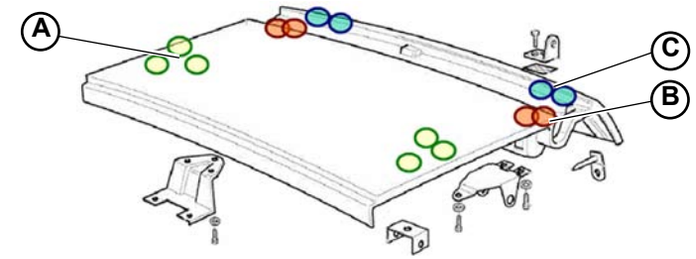
29d	**Assembling the brake disk (standard & carboceramic)** **A.** Tightening torque of the front brake bolts **B.** Tightening torque of rear brake bolts	**25** **25**	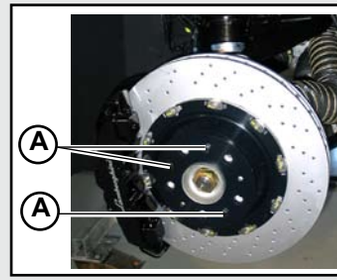

® Automobili Lamborghini S.p.A.
The information and procedures published below are strictly confidential and exclusively for the Lamborghini Dealer Network and Authorized Service Points. All copyrights are property of Automobili Lamborghini S.p.A based on copyright law. All of the PDF chapters in the WEB workshop manuals described below are based on information available at the time of publication. The company reserves the right to make updates and modifications. The following are prohibited: reprinting, reproduction, forwarding to unauthorized people and/or third parties, and translation, including partial, without written authorization from Automobili Lamborghini S.p.A.

	DESCRIPTION	TIGHTENING TORQUE (Nm)	PICTURE
30a	**Tightening torque of the handbrake caliper**		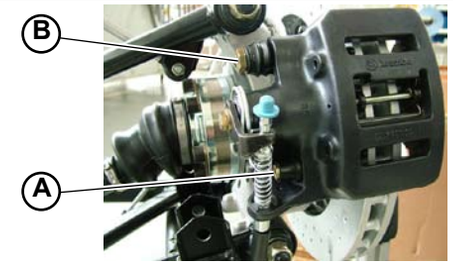
	A. 8 mm diameter bolt	**24**	
	B. 10 mm diameter bolt	**47,5**	
30b	**Tightening torque of brake calliper on the front and rear hubs**		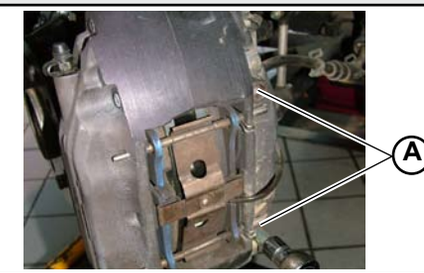
	A. 10 mm diameter fixing screws	**115**	
30c	**Tightening torque of the flywheel**		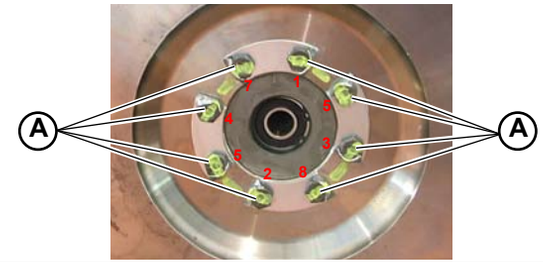
	A. 8 mm diameter bolt	**40**	
30d	**Tightening torque of the main shaft and countershaft**		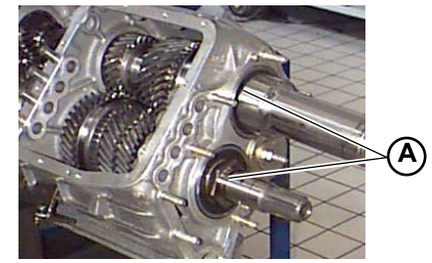
	A. Ring nut	**343**	

® Automobili Lamborghini S.p.A.
The information and procedures published below are strictly confidential and exclusively for the Lamborghini Dealer Network and Authorized Service Points. All copyrights are property of Automobili Lamborghini S.p.A based on copyright law. All of the PDF chapters in the WEB workshop manuals described below are based on information available at the time of publication. The company reserves the right to make updates and modifications. The following are prohibited: reprinting, reproduction, forwarding to unauthorized people and/or third parties, and translation, including partial, without written authorization from Automobili Lamborghini S.p.A.

	DESCRIPTION	TIGHTENING TORQUE (Nm)	PICTURE
31a	**Tightening torque of the pipes on the oil radiator (lower and upper)**		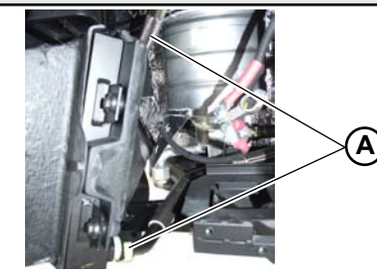
	A. Pipes	**55**	
31b	**Tightening the spark plugs on right and left heads**		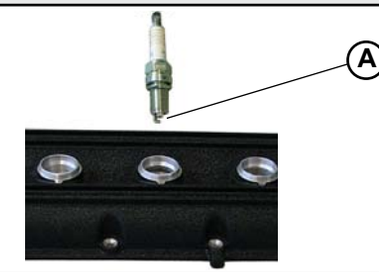
	A. Spark plug tightening (101905619) - with the grease	**18 ± 5%**	
	A. Spark plug tightening(101905602) - without the grease	**15 ÷ 20**	

® Automobili Lamborghini S.p.A.
The information and procedures published below are strictly confidential and exclusively for the Lamborghini Dealer Network and Authorized Service Points. All copyrights are property of Automobili Lamborghini S.p.A based on copyright law. All of the PDF chapters in the WEB workshop manuals described below are based on information available at the time of publication. The company reserves the right to make updates and modifications. The following are prohibited: reprinting, reproduction, forwarding to unauthorized people and/or third parties, and translation, including partial, without written authorization from Automobili Lamborghini S.p.A.

Electrical control

- Static ignition with single coils (one for each spark plug).
- Ignition order: 1-7-4-10-2-8-6-12-3-9-5-11 (Cylinder 1 is the first on the left when looking at the engine from the flywheel side).
- Lamborghini LIE sequential multipoint electronic injection.
- Emission control system using three-way catalytic converters and oxygen sensors.
- Electronic intake/exhaust variable valve timing **(linear)**.
- Air supply system with four throttle bodies and two ETB control units.
- Electronic traction control system.

CAUTION!

- **Always disconnect the battery earth cable when working on the fuel supply system or the electrical system. Do not smoke or work near heaters or any other device that could be a fire hazard. The fluids contained inside the engine compartment can cause fires. Always ensure a fire extinguisher is within reach.**
- **Before charging the battery, always disconnect the earth cable.**
- **To disconnect the battery, first disconnect the negative cable (-) and then the positive (+).**
- **Do not carry out fast charges on the battery (jump starts using cables) for more than one minute and do not exceed the battery 16.5 Volts while the cables are connected. Wait at least one minute before repeating the procedure.**
- **While working on the battery, avoid short-circuiting the terminals with tools or other metal objects. This would cause the battery to overheat very quickly and therefore explode, damaging the electronic components.**
- **Always keep the battery out of reach of children.**
- **Do not attempt to charge a frozen or defrosted battery. Danger of explosion! Replace frozen batteries. A flat battery can freeze at 32°F (0°C).**
- **Do not use damaged batteries. Danger of explosion! Always replace damaged batteries.**
- **California Proposition no. 65: Battery posts, terminals, and related accessories contain lead and lead compounds, chemicals known to the State of California to cause cancer and reproductive harm. Handle with care and then wash hands carefully.**

® Automobili Lamborghini S.p.A.
The information and procedures published below are strictly confidential and exclusively for the Lamborghini Dealer Network and Authorized Service Points. All copyrights are property of Automobili Lamborghini S.p.A based on copyright law. All of the PDF chapters in the WEB workshop manuals described below are based on information available at the time of publication. The company reserves the right to make updates and modifications. The following are prohibited: reprinting, reproduction, forwarding to unauthorized people and/or third parties, and translation, including partial, without written authorization from Automobili Lamborghini S.p.A.

- **The vehicle described in this manual is equipped with a safety system (SRS) which, during certain types of impact, deploy the airbags by explosive devices. If handled improperly or without the due precautions, said devices could deploy accidentally and cause serious injury. To avoid personal injury or damage to the SRS systems, every test, disassembly, repair or disposal procedure carried out on the SRS systems shall be executed exclusively by qualified Lamborghini technicians.**
- **Do not use light indicators to carry out electrical tests on the SRS system. The SRS system may only be tested by qualified Lamborghini technicians who possess special equipment for vehicles: PC-DIAG (diagnosis software). SRS system components may only be electrically tested when installed on the vehicle.**
- **While driving a vehicle equipped with an SRS safety system, do not hold control devices in your hand or on your knees while the vehicle is in motion. Any objects located between the driver and the airbag can increase the risk of injury in case of an accident.**

STOP

Important!

- **Before doing any electric welding on vehicles equipped with ABS brakes, disconnect the battery earth cable and the connector from the ABS control module. Failure to disconnect the ground strap damages the ABS system.**
- **Before disconnecting the battery or removing the car hi-fi on vehicles equipped with a car hi-fi featuring an anti-theft system, ensure you possess the correct car hi-fi activation code. If an incorrect code is entered when the radio is connected, the radio could be shutdown and become unusable even if the correct code is entered at a later date.**
- **Only use electrical or pneumatic tools to loosen fixtures and threaded clamps. Do not use this type of tool to tighten fixtures, especially components made of light alloy. Always use a dynamometric wrench to tighten fixtures to the required torque.**
- **Ensure the engine is not running before connecting the battery. If this is not the case, the engine control unit (LIE) could be damaged.**

Hazards

To avoid damage to the operator or vehicle, disconnect the battery before carrying out any maintenance/repair work by switching the battery disconnect control OFF. If it is necessary to work while the battery is connected, take the utmost care and adhere to the safety procedures included in the manual.

® Automobili Lamborghini S.p.A.
The information and procedures published below are strictly confidential and exclusively for the Lamborghini Dealer Network and Authorized Service Points. All copyrights are property of Automobili Lamborghini S.p.A based on copyright law. All of the PDF chapters in the WEB workshop manuals described below are based on information available at the time of publication. The company reserves the right to make updates and modifications. The following are prohibited: reprinting, reproduction, forwarding to unauthorized people and/or third parties, and translation, including partial, without written authorization from Automobili Lamborghini S.p.A.

USE	CONNECTION	VOLT	POWER [WATT]	QUANTITY
Low and high beam headlights	D2S (Bi-Xenon Hella)	85	35	2
Front running lights	W5W	12	5	2
Tail lights and brake lights	P21/5 W	12	21/5	2
Central brake light	Lamborghini p.n. 410945249A	12		1
Tail lights	W3W	12	3	4
Rear fog light and tail light	P21W	12	21	2
Reverse light	W5W	12	5	8
Front turn signals	H21W	12	21	2
License plate light	C5W	12	5	2
Side turn signals	W5W	12	5	2
Rear turn signals	WY5W	12	5	12
Fog lights	H3	12	55	2
Courtesy lights	Toshiba 12 V 6WX (xenon)*	12	6	2
Front luggage compartment light	W5W	12	5	1
Door light	T 1 1/2 (attacco W 2x4,6d)	12	1,2	2

* interchangeable with W5W

Note
Lamborghini recommends using Osram or Philips light bulbs.

® Automobili Lamborghini S.p.A.
The information and procedures published below are strictly confidential and exclusively for the Lamborghini Dealer Network and Authorized Service Points. All copyrights are property of Automobili Lamborghini S.p.A based on copyright law. All of the PDF chapters in the WEB workshop manuals described below are based on information available at the time of publication. The company reserves the right to make updates and modifications. The following are prohibited: reprinting, reproduction, forwarding to unauthorized people and/or third parties, and translation, including partial, without written authorization from Automobili Lamborghini S.p.A.

Scrapping

Lamborghini Automobili S.p.A. recommends the utmost care when scrapping and subsequently disposing of the various materials making up the car. Below is a list of materials that must be disposed of separately and in compliance with the laws in effect in the relative country:

- Battery
- Wheel balancing weights containing lead (that is, marked Pb)
- Catalytic converters
- Glass
- Tyres
- Components containing explosive charges (airbags)
- Fuel, engine oil, gearbox oil, coolant, antifreeze, brake fluid, air conditioning system fluid and any other fluids contained within the disused vehicle.
- Components containing mercury (where feasible): Low beam headlight bulbs, navigator display (colour displays only)
- Plastic components

STOP **During disposal, comply with the specific laws in force in the country of use.**

® Automobili Lamborghini S.p.A.
The information and procedures published below are strictly confidential and exclusively for the Lamborghini Dealer Network and Authorized Service Points. All copyrights are property of Automobili Lamborghini S.p.A based on copyright law. All of the PDF chapters in the WEB workshop manuals described below are based on information available at the time of publication. The company reserves the right to make updates and modifications. The following are prohibited: reprinting, reproduction, forwarding to unauthorized people and/or third parties, and translation, including partial, without written authorization from Automobili Lamborghini S.p.A.

AIRBAG SCRAPPING

Disassembling the Driver airbag Inflator

Preliminary operations:

- Remove driver airbag **(088003)**.

Driver disassemble:

1. Take off the squib connector (**A-Fig.1**).

STOP Don't cut the cable or brake the plug! Otherwise no activation of the short circuit!

2. Unscrew the four flange nuts with a torque wrench or ratchet. (**B-Fig.2**).

3. Detach the inflator from the airbag (**C-Fig.3**).

4. Put the inflator into the inflator pallet immediately.

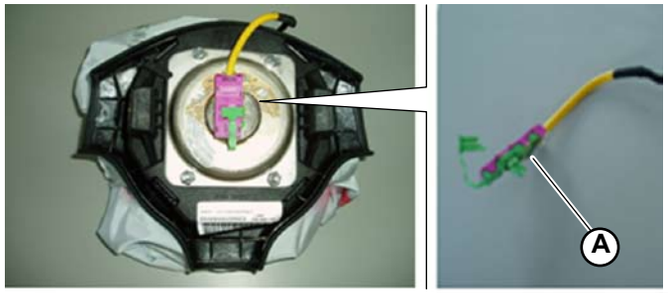

Fig.1

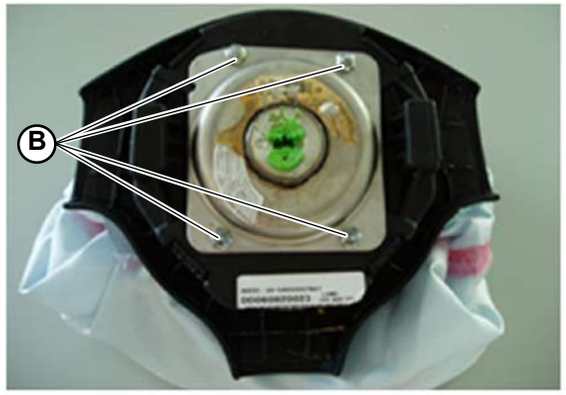

Fig.2

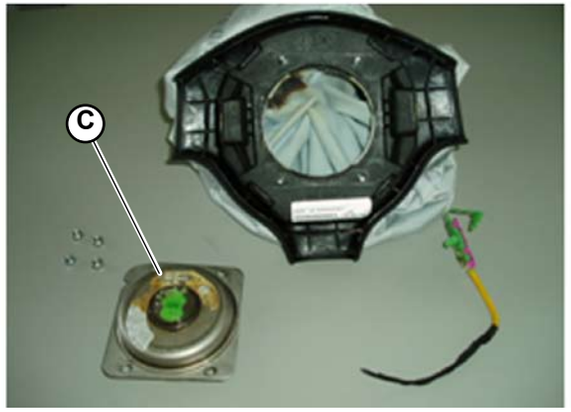

Fig.3

® Automobili Lamborghini S.p.A.
The information and procedures published below are strictly confidential and exclusively for the Lamborghini Dealer Network and Authorized Service Points. All copyrights are property of Automobili Lamborghini S.p.A based on copyright law. All of the PDF chapters in the WEB workshop manuals described below are based on information available at the time of publication. The company reserves the right to make updates and modifications. The following are prohibited: reprinting, reproduction, forwarding to unauthorized people and/or third parties, and translation, including partial, without written authorization from Automobili Lamborghini S.p.A.

Disassembling the Inflator from passenger's side airbag

Preliminary operations:

- Remove passenger's airbag module **(088003)**.

Inflator disassemble:

1. Take off the two squib connectors.
2. Dismantle connectors from module (**A-Fig.4**).

STOP Don't cut the cable or brake the plug! Otherwise no activation of the short circuit!

3. Unscrew the eight flange nuts with a torque wrench or ratchet (**B-Fig.5**).
4. Pull out the inflators (**C-Fig.6**).
5. Put the inflators into inflator pallets immediately.

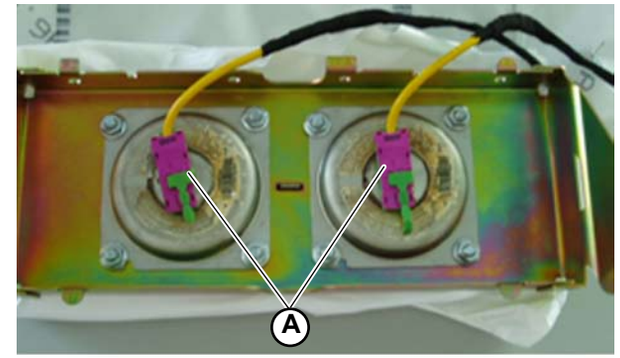

Fig.1

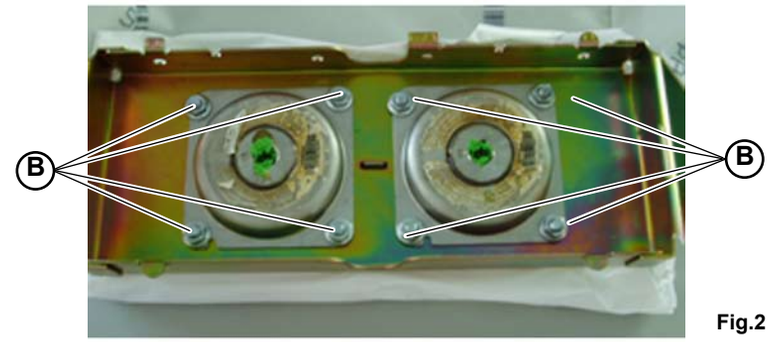

Fig.2

Fig.3

® Automobili Lamborghini S.p.A.
The information and procedures published below are strictly confidential and exclusively for the Lamborghini Dealer Network and Authorized Service Points. All copyrights are property of Automobili Lamborghini S.p.A based on copyright law. All of the PDF chapters in the WEB workshop manuals described below are based on information available at the time of publication. The company reserves the right to make updates and modifications. The following are prohibited: reprinting, reproduction, forwarding to unauthorized people and/or third parties, and translation, including partial, without written authorization from Automobili Lamborghini S.p.A.

WHEEL ALIGNMENT

STOP **The vehicle must be complete with all components: Mechanical, body, internal and external; without these the finished vehicle's weight would differ.**
The vehicle must be positioned on the alignment bench with the tires inflated to the indicated pressure required for alignment.

Vehicle height from ground:

- The height above ground must be read at the four indicated positions (one for each wheel) by measuring the distance between the floor and the measurement areas on the chassis, respectively:
- **For the front:** Distance from the ground to the lower edge of the chassis, measured at the front wheel axle.
- **For the rear:** Distance from the ground to the lower edge of the chassis, measured at the rear wheel axle.

Table A

	Front	Rear
Vehicle height from ground (after road test) (mm.)	155±3	145±3
Caster (°)	+6° 00' ÷ +6° 30'	-
Toe-in per wheel (°)	0° 04' ÷ 0° 06'	0° 10' ÷ 0° 14'
Total toe-in* (°)	0° 08' ÷ 0° 12'	0° 20' ÷ 0° 28'
Camber (°)	-0° 40' ÷ -0° 50'	-0° 40' ÷ -0° 50'

* Note: Total toe-in indicates the toe-in angle generated by the toe-in of both wheels. The individual toe-in value is logically half the total value.

® Automobili Lamborghini S.p.A.
The information and procedures published below are strictly confidential and exclusively for the Lamborghini Dealer Network and Authorized Service Points. All copyrights are property of Automobili Lamborghini S.p.A based on copyright law. All of the PDF chapters in the WEB workshop manuals described below are based on information available at the time of publication. The company reserves the right to make updates and modifications. The following are prohibited: reprinting, reproduction, forwarding to unauthorized people and/or third parties, and translation, including partial, without written authorization from Automobili Lamborghini S.p.A.

Wheel alignment at customer service centers

The wheel alignment values in **table A** should be used on vehicles at customer service centers.

The fuel tank should be empty when carrying out wheel alignment.
Any variations in vehicle height due to a full fuel tank can be compensated for as stated in attached **table B**.

Table B

	Front	Rear
Vehicle height from ground with empty fuel tank (mm.)	155 ± 3	145 ± 3
Vehicle height from ground with full fuel tank (mm.)	152 ± 3	141 ± 3

® Automobili Lamborghini S.p.A.
The information and procedures published below are strictly confidential and exclusively for the Lamborghini Dealer Network and Authorized Service Points. All copyrights are property of Automobili Lamborghini S.p.A based on copyright law. All of the PDF chapters in the WEB workshop manuals described below are based on information available at the time of publication. The company reserves the right to make updates and modifications. The following are prohibited: reprinting, reproduction, forwarding to unauthorized people and/or third parties, and translation, including partial, without written authorization from Automobili Lamborghini S.p.A.

ACCESSORIES

D= Diablo M= Murcielago G= Gallardo

Code	Description	D	M	G			Photo
0048010349	Car cover kit			●			
0048016953	Car cover kit		●				
900000109	Interior leather cleaning kit			●			

® Automobili Lamborghini S.p.A.
The information and procedures published below are strictly confidential and exclusively for the Lamborghini Dealer Network and Authorized Service Points. All copyrights are property of Automobili Lamborghini S.p.A based on copyright law. All of the PDF chapters in the WEB workshop manuals described below are based on information available at the time of publication. The company reserves the right to make updates and modifications. The following are prohibited: reprinting, reproduction, forwarding to unauthorized people and/or third parties, and translation, including partial, without written authorization from Automobili Lamborghini S.p.A.

Code	Description	D	M	G			Photo
900000103	Adesivo “Next service”	●	●	●			

® Automobili Lamborghini S.p.A.
The information and procedures published below are strictly confidential and exclusively for the Lamborghini Dealer Network and Authorized Service Points. All copyrights are property of Automobili Lamborghini S.p.A based on copyright law. All of the PDF chapters in the WEB workshop manuals described below are based on information available at the time of publication. The company reserves the right to make updates and modifications. The following are prohibited: reprinting, reproduction, forwarding to unauthorized people and/or third parties, and translation, including partial, without written authorization from Automobili Lamborghini S.p.A.

Chassis number location

Engine serial number

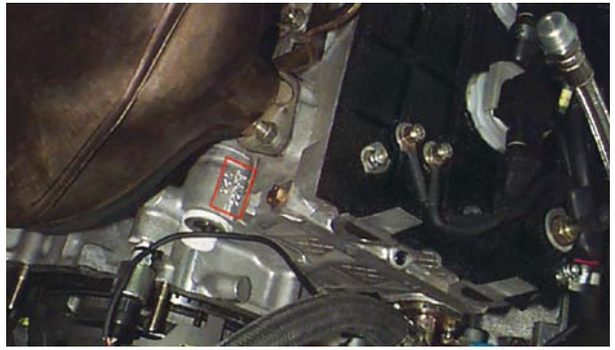

Front differential serial number

Gearbox serial number

Rear differential serial number

® Automobili Lamborghini S.p.A.
The information and procedures published below are strictly confidential and exclusively for the Lamborghini Dealer Network and Authorized Service Points. All copyrights are property of Automobili Lamborghini S.p.A based on copyright law. All of the PDF chapters in the WEB workshop manuals described below are based on information available at the time of publication. The company reserves the right to make updates and modifications. The following are prohibited: reprinting, reproduction, forwarding to unauthorized people and/or third parties, and translation, including partial, without written authorization from Automobili Lamborghini S.p.A.

CHECKLIST

Order number	**Service manager**	**Number plate**	**Registration date**
Engine number	**Gearbox number**	**Gearbox type**	**Km/Mls**
VIN	**Model**	**Model Year**	**Date**
Mechanic's name	**Delivery date**	**Car number**	**Type of job carried out**

Description	i.o.	non i.o.	Repaired
On-board documentation			
Check whether this VIN is affected by any recall or service campaign to be performed			
Check the maintenance schedule to see if the car is due for a service or if any fluids need to be changed			
Check the exhaust gas expiry date and the M.O.T./service date			
Inside the vehicle			
Electric windows, folding mirrors and electric top check positioning			
Adjust the digital clock			
Check all switches, electrical devices, indicators and other elements function correctly			
Ensure the controls on the pushbutton panel are complete			
Check the interior compartment for any visual faults			
Ensure footboards are fixed securely			

i.o. = in order not i.o. = out of order Repaired = the problem has been cleared up	NOTES:	Date: Signature:

® Automobili Lamborghini S.p.A.
The information and procedures published below are strictly confidential and exclusively for the Lamborghini Dealer Network and Authorized Service Points. All copyrights are property of Automobili Lamborghini S.p.A based on copyright law. All of the PDF chapters in the WEB workshop manuals described below are based on information available at the time of publication. The company reserves the right to make updates and modifications. The following are prohibited: reprinting, reproduction, forwarding to unauthorized people and/or third parties, and translation, including partial, without written authorization from Automobili Lamborghini S.p.A.

CHECKLIST

Order number	**Service manager**	**Number plate**	**Registration date**
Engine number	**Gearbox number**	**Gearbox type**	**Km/Mls**
VIN	**Model**	**Model Year**	**Date**
Mechanic's name	**Delivery date**	**Car number**	**Type of job carried out**

Description	i.o.	non i.o.	Repaired
Outside the vehicle			
Check and/or replace the windscreen wiper blades (if agreed beforehand with the customer)			
Ensure the windscreen wipers, washing system, flap, headlamp wipers and nozzles function correctly			
Check the exterior for any visual faults			
Windscreen wiper blades: ensure the parked wiper position is correct. If the blades "scrape", check whether they are set at the correct angle			
Electrical system			
Front lights: ensure the side lights, low beams, high beams, fog lights, indicator lights, hazard lights and the luggage compartment light function correctly			
Check the height of the front headlamps and adjust if necessary			
Rear lights ensure the brake lights, rear lights, reversing lights, rear fog lights, number plate light, indicator lights and hazard lights function correctly			
Interior compartment lights: interior lights, reading lights, passenger glove box light, door clearance lights and puddle lights.			
Battery: check the charge status, the electrolyte level (top up with distilled water if necessary) and ensure the battery poles have not oxidised			
Diagnosis: read, if possible archive, and then delete any error codes			

i.o. = in order not i.o. = out of order Repaired = the problem has been cleared up	NOTES:	Date: Signature:

® Automobili Lamborghini S.p.A.
The information and procedures published below are strictly confidential and exclusively for the Lamborghini Dealer Network and Authorized Service Points. All copyrights are property of Automobili Lamborghini S.p.A based on copyright law. All of the PDF chapters in the WEB workshop manuals described below are based on information available at the time of publication. The company reserves the right to make updates and modifications. The following are prohibited: reprinting, reproduction, forwarding to unauthorized people and/or third parties, and translation, including partial, without written authorization from Automobili Lamborghini S.p.A.

CHECKLIST

Order number	**Service manager**	**Number plate**	**Registration date**
Engine number	**Gearbox number**	**Gearbox type**	**Km/Mls**
VIN	**Model**	**Model Year**	**Date**
Mechanic's name	**Delivery date**	**Car number**	**Type of job carried out**

Description	i.o.	non i.o.	Repaired
Engine compartment (rear)			
Engine and engine compartment: visually check for any leaks and/or faults			
Engine oil: check the oil level and top up if necessary			
Cooling system: check the antifreeze fluid and the coolant level. Antifreeze protection up to -25°C			
Brakes: maximum fluid level			
Lifting system: ensure the system functions correctly			
Gearbox: check the oil level and top up if necessary			
Luggage compartment (front)			
Windscreen washer system: check the fluid level and top up			
Lower part of the vehicle			
Engine, gearbox, differentials, steering, coupling covers: visual check to ensure there are no leaks and/or damage			
Brake system: visual check to ensure there are no leaks and/or damage			

i.o. = in order not i.o. = out of order Repaired = the problem has been cleared up	NOTES:	Date: Signature:

® Automobili Lamborghini S.p.A.
The information and procedures published below are strictly confidential and exclusively for the Lamborghini Dealer Network and Authorized Service Points. All copyrights are property of Automobili Lamborghini S.p.A based on copyright law. All of the PDF chapters in the WEB workshop manuals described below are based on information available at the time of publication. The company reserves the right to make updates and modifications. The following are prohibited: reprinting, reproduction, forwarding to unauthorized people and/or third parties, and translation, including partial, without written authorization from Automobili Lamborghini S.p.A.

CHECKLIST

Order number	**Service manager**	**Number plate**	**Registration date**
Engine number	**Gearbox number**	**Gearbox type**	**Km/Mls**
VIN	**Model**	**Model Year**	**Date**
Mechanic's name	**Delivery date**	**Car number**	**Type of job carried out**

Description	i.o.	non i.o.	Repaired
Steering tie rod heads: ensure the steering tie rod heads are properly secured and ensure the clearance is correct. Check the bellow seals			
Exhaust system: visual check to ensure there are no leaks and/or damage			
Underbody: visual check to ensure there is no damage and that the fixing devices and pipes have not become loose			
Wheels and tyres			
Wheel fixing screws: ensure the tightening torque is correct			
Front left tyre: check the pressure, check the condition of the tread and ensure the wear of the tread is even. Thickness in mm _____			
Front right tyre: check the pressure, check the condition of the tread and ensure the wear of the tread is even. Thickness in mm _____			
Rear left tyre: check the pressure, check the condition of the tread and ensure the wear of the tread is even. Thickness in mm _____			
Rear right tyre: check the pressure, check the condition of the tread and ensure the wear of the tread is even. Thickness in mm _____			
Final jobs			
Climate control system check the climate control system functions correctly			
Navigator (if present)/Radio: check the navigator and/or radio function correctly			

i.o. = in order not i.o. = out of order Repaired = the problem has been cleared up	NOTES:	Date: Signature:

® Automobili Lamborghini S.p.A.
The information and procedures published below are strictly confidential and exclusively for the Lamborghini Dealer Network and Authorized Service Points. All copyrights are property of Automobili Lamborghini S.p.A based on copyright law. All of the PDF chapters in the WEB workshop manuals described below are based on information available at the time of publication. The company reserves the right to make updates and modifications. The following are prohibited: reprinting, reproduction, forwarding to unauthorized people and/or third parties, and translation, including partial, without written authorization from Automobili Lamborghini S.p.A.

CHECKLIST

Order number	**Service manager**	**Number plate**	**Registration date**
Engine number	**Gearbox number**	**Gearbox type**	**Km/Mls**
VIN	**Model**	**Model Year**	**Date**
Mechanic's name	**Delivery date**	**Car number**	**Type of job carried out**

Description	i.o.	non i.o.	Repaired
Headlamps: check and adjust if necessary			
Test drive: carry out			
After servicing, complete and stamp the space provided in the warranty booklet and complete the sticker (001200) to be applied onto the door ledge			

i.o. = in order not i.o. = out of order Repaired = the problem has been cleared up	NOTES:	Date: Signature:

® Automobili Lamborghini S.p.A.
The information and procedures published below are strictly confidential and exclusively for the Lamborghini Dealer Network and Authorized Service Points. All copyrights are property of Automobili Lamborghini S.p.A based on copyright law. All of the PDF chapters in the WEB workshop manuals described below are based on information available at the time of publication. The company reserves the right to make updates and modifications. The following are prohibited: reprinting, reproduction, forwarding to unauthorized people and/or third parties, and translation, including partial, without written authorization from Automobili Lamborghini S.p.A.

VEHICLE CARE CHECKLIST DURING PERIODS OF DISUSE

IMMEDIATELY AFTER SWITCHING THE VEHICLE OFF

Description	OK
Park vehicle in the parking area slowly, carefully and keeping sufficient distance. Do not switch off the vehicle under trees, poles, etc.	
Remove any paper or other objects from the electric panel, seats and compartments.	
Remove the ignition key and place it on the passenger seat.	
Open all the air vents, turn the ventilator onto maximum.	
Lift the sun visors.	
Remove any dirt, snow or water from the vehicle (bottom of the car).	
Lock the windows, engine compartment and luggage compartment.	
With both manual gear and the automatic transmission place in 1st,	
Do not engage reverse gear! Do not apply the handbrake.	
If necessary re-position the floor protection mats.	
Check that the tyre inflation pressure is between 3.5 and 4.0 bar and if necessary inflate.	
Disconnect the clamp from the negative pole of the battery	
Install the windscreen wipers and the windscreen wiper guards for haulage.	
Check the voltage is in the resting condition. The voltage is in resting condition when: the engine has not been running for at least 2 h and no controls have been activated. If the battery has a voltage of less than 12.5 V recharge it immediately! If the battery has a voltage of more than 12.5 V it is not necessary to take any measures. Only use charging devices with established voltage (e.g. VAS 5095 see the specific technical information). The charging voltage cannot exceed 14.4 V!	
Do not remove the sheet used for transport before the vehicle is delivered to the client. Check for any damage and keep the protection on the seats.	

VIN Number Vehicle collection date Date of delivery to the client	NOTES:	Date: Signature:

Please include date and signature

® Automobili Lamborghini S.p.A.
The information and procedures published below are strictly confidential and exclusively for the Lamborghini Dealer Network and Authorized Service Points. All copyrights are property of Automobili Lamborghini S.p.A based on copyright law. All of the PDF chapters in the WEB workshop manuals described below are based on information available at the time of publication. The company reserves the right to make updates and modifications. The following are prohibited: reprinting, reproduction, forwarding to unauthorized people and/or third parties, and translation, including partial, without written authorization from Automobili Lamborghini S.p.A.

VEHICLE CARE CHECKLIST DURING PERIODS OF DISUSE
WEEKLY

Description	OK
Check if the vehicle is subject to erosion by harsh agents (e.g. Bird droppings, pollution) and clean if necessary.	
Check for any damage and keep the protection on the seat.	

VIN Number Vehicle collection date Date of delivery to the client	NOTES:	Date: Signature:

Please include date and signature

® Automobili Lamborghini S.p.A.
The information and procedures published below are strictly confidential and exclusively for the Lamborghini Dealer Network and Authorized Service Points. All copyrights are property of Automobili Lamborghini S.p.A based on copyright law. All of the PDF chapters in the WEB workshop manuals described below are based on information available at the time of publication. The company reserves the right to make updates and modifications. The following are prohibited: reprinting, reproduction, forwarding to unauthorized people and/or third parties, and translation, including partial, without written authorization from Automobili Lamborghini S.p.A.

VEHICLE CARE CHECKLIST DURING PERIODS OF DISUSE
IN ADDITION EVERY 3 MONTHS

Description	OK
Check the voltage in the resting condition The voltage is in resting condition when: the engine has not been running for at least 2 h and no controls have been activated. If the battery has a voltage of less than 12.5 V recharge it immediately! If the battery has a voltage of more than 12.5 V - it is not necessary to take any measures.	
Remove any signs of rust on the disk brakes. Connect the clamp to the negative pole of the battery. Drive approx 500 m in 2. (from 50 - 60 km/h), brake slightly several times. Then brake strongly 3 times with the vehicle at high speed complying with the speeding limit and in respect of saifty	
Check that the tyre inflation pressure is between 3.5 and 4.0 bar and if necessary inflate.	
Disconnect the clamp from the negative pole of the battery	
Maintenance and cleaning of the leather upholstery. Keep the leather upholstery clean to prevent the formation of mould. If any mould does develop, remove using the cleaning kit (code 00A096372017) (**001200**)	

VIN Number Vehicle collection date Date of delivery to the client	NOTES:	Date: Signature:

Please include date and signature

® Automobili Lamborghini S.p.A.
The information and procedures published below are strictly confidential and exclusively for the Lamborghini Dealer Network and Authorized Service Points. All copyrights are property of Automobili Lamborghini S.p.A based on copyright law. All of the PDF chapters in the WEB workshop manuals described below are based on information available at the time of publication. The company reserves the right to make updates and modifications. The following are prohibited: reprinting, reproduction, forwarding to unauthorized people and/or third parties, and translation, including partial, without written authorization from Automobili Lamborghini S.p.A.

PRE-DELIVERY TESTS

STOP **The Lamborghini Dealer is obliged, before delivering the car to the customer, to carry out the checks and tunings listed below. Said operations must be carried out following the instructions of the Factory.**

Description	OK	NO	Rectified
00 General information			
Check vehicle identification numbers are clearly legible			
Road-test the car			
Fill in the identification data forms and return a copy to Lamborghini as soos as possible			
Check that the car is supplied with Warranty and Scheduled Maintenance Plan Booklet, Owner's Manual and tool kit and emergency triangle			
01 Engine			
Check oil level			
Check coolant level			
Check belt tension			
Check for oil, water and fuel leaks			
Check clutch oil level			
03 Transmission			
Check oil level and proper operation of handbrake			

Check means: inspect and perform any necessary operations.	NOTE:	Date: Stamp and signature:

® Automobili Lamborghini S.p.A.
The information and procedures published below are strictly confidential and exclusively for the Lamborghini Dealer Network and Authorized Service Points. All copyrights are property of Automobili Lamborghini S.p.A based on copyright law. All of the PDF chapters in the WEB workshop manuals described below are based on information available at the time of publication. The company reserves the right to make updates and modifications. The following are prohibited: reprinting, reproduction, forwarding to unauthorized people and/or third parties, and translation, including partial, without written authorization from Automobili Lamborghini S.p.A.

Description	OK	NO	Rectified
04 Front axle, steering / 05 Rear axle			
Check steering box and steering linkage bolts and nuts torque			
Check power steering fluid level			
Check the tightening of the front and rear suspension retaning devices			
Check proper working of shock absorbers and front drive lifting system if present on the vehicle			
06 Wheels / Brakes			
Check brake oil level and handbrake proper operation			
Check tyre pressure			
Check wheel nut tightening			
08 Body			
Check safety belt fasteners for proper torque and operation			
09 Electrical equipment			
Check battery charge status			
Check lighting system, turn indicators, stop and warning lights			
Check headlight aiming			
Check ventilation system and air conditioning working			
Check windshield wiper and washer working			

Check means: inspect and perform any necessary operations.	NOTE:	Date: Stamp and signature:

® Automobili Lamborghini S.p.A.
The information and procedures published below are strictly confidential and exclusively for the Lamborghini Dealer Network and Authorized Service Points. All copyrights are property of Automobili Lamborghini S.p.A based on copyright law. All of the PDF chapters in the WEB workshop manuals described below are based on information available at the time of publication. The company reserves the right to make updates and modifications. The following are prohibited: reprinting, reproduction, forwarding to unauthorized people and/or third parties, and translation, including partial, without written authorization from Automobili Lamborghini S.p.A.

Description	OK	NO	Rectified
Check horn			
10 Diagnosis			
Print LDAS32 and LaRa-AS data and send both LDAS32 and the LaRa-AS printout to Lamborghini			

Check means: inspect and perform any necessary operations.

NOTE:

Date:

Stamp and signature:

® Automobili Lamborghini S.p.A.
The information and procedures published below are strictly confidential and exclusively for the Lamborghini Dealer Network and Authorized Service Points. All copyrights are property of Automobili Lamborghini S.p.A based on copyright law. All of the PDF chapters in the WEB workshop manuals described below are based on information available at the time of publication. The company reserves the right to make updates and modifications. The following are prohibited: reprinting, reproduction, forwarding to unauthorized people and/or third parties, and translation, including partial, without written authorization from Automobili Lamborghini S.p.A.

SCHEDULED MAINTENANCE PLAN 1.5 miles (x 1000) - 2,5 Km (x 1000)

Type	Description	OK	NO	Rectified
	Check whether this VIN is affected by any recall or service campaign to be performed			
	01 Engine			
I	Injection system: lines and connections **(012801)**			
I - R**	Clutch wear check (for cars with e-gear) **(014203)(109000)**			
R	Engine oil and filter (minimum once per year) **(011707)(011708)**			
	06 Wheels, Brakes			
I	Brake discs and pads **(061501)**			
I	Brake pedal clearance and handbrake akjustment **(060201)**			
I	Brake and clutch fluid level (change every year) **(061101)(061107)**			
I	Tyres and rims: check the tyre tread, pressure and general condition **(060101)**			
	09 Electrical equipment			
I	Battery: connections and charge **(091501)**			
I-A	Engine accessory drive belt **(090301)(090303)**			

I = Inspection and any additional service if required
A = Adjustment
R = Replacement

NOTE:

Date:

Stamp and signature:

* Though not strictly necessary, these operations are recommended if the car has been often driven on dusty roads or in difficult road traffic condition. If these operations are not carried out during the warranty period, the warranty will NOT lapse.

** Use the diagnostic tool to check the condition of the disks. Replace the clutch if the wear exceeds the value indicated in the workshop manual.

® Automobili Lamborghini S.p.A.
The information and procedures published below are strictly confidential and exclusively for the Lamborghini Dealer Network and Authorized Service Points. All copyrights are property of Automobili Lamborghini S.p.A based on copyright law. All of the PDF chapters in the WEB workshop manuals described below are based on information available at the time of publication. The company reserves the right to make updates and modifications. The following are prohibited: reprinting, reproduction, forwarding to unauthorized people and/or third parties, and translation, including partial, without written authorization from Automobili Lamborghini S.p.A.

SCHEDULED MAINTENANCE PLAN 1.5 miles (x 1000) - 2,5 Km (x 1000)

Type	Description	OK	NO	Rectified
	10 Diagnosi			
I	Fault memory enquiry using La-Ra and LDAS. Data printout ant troubleshooting in case of error codes **(109000)(109114)**			
I	Idle speed. (**USA CANADA**)			
I	ROAD TEST			
	After servicing, complete and stamp the space provided in the warranty booklet and complete the sticker (001200) to be applied onto the door ledge			

I = Inspection and any additional service if required
A = Adjustment
R = Replacement

NOTE:

Date:

Stamp and signature:

* Though not strictly necessary, these operations are recommended if the car has been often driven on dusty roads or in difficult road traffic condition. If these operations are not carried out during the warranty period, the warranty will NOT lapse.

** Use the diagnostic tool to check the condition of the disks. Replace the clutch if the wear exceeds the value indicated in the workshop manual.

® Automobili Lamborghini S.p.A.
The information and procedures published below are strictly confidential and exclusively for the Lamborghini Dealer Network and Authorized Service Points. All copyrights are property of Automobili Lamborghini S.p.A based on copyright law. All of the PDF chapters in the WEB workshop manuals described below are based on information available at the time of publication. The company reserves the right to make updates and modifications. The following are prohibited: reprinting, reproduction, forwarding to unauthorized people and/or third parties, and translation, including partial, without written authorization from Automobili Lamborghini S.p.A.

SCHEDULED MAINTENANCE PLAN 7.5 miles (x 1000) - 12 Km (x 1000)

Type	Description	OK	NO	Rectified
	Check whether this VIN is affected by any recall or service campaign to be performed			
	01 Engine			
I - R**	Clutch wear check (for cars with e-gear) **(014203)(109000)**			
R	Engine oil and filter (minimum once per year) **(011707)(011708)**			
	02 Fuel tank, exhaust system, heating			
I	Air conditioning system (inspection at least every year) **(026001)**			
I	Air conditioning system dust filters (at least every two years) **(026001)(026003)**			
	03 Transmission			
I	Gearbox oil: check the level and clean the filter (top up the oil that leaked when cleaning the filter). **(031504)**			
I	Shift control support adjustment inspection **(032301)**			
	04 Front axle, steering / 05 Rear axle			
I	Steering components, joint protections and boots on the steering rack, steering levers and drive shafts **(041901)**			
I	Front and rear suspension articulated joints: visual inspection and check torque is correct **(041101)(051101)**			

I = Inspection and any additional service if required A = Adjustment R = Replacement	NOTE:	Date: Stamp and signature:

* Though not strictly necessary, these operations are recommended if the car has been often driven on dusty roads or in difficult road traffic condition. If these operations are not carried out during the warranty period, the warranty will NOT lapse.

** Use the diagnostic tool to check the condition of the disks. Replace the clutch if the wear exceeds the value indicated in the workshop manual.

® Automobili Lamborghini S.p.A.
The information and procedures published below are strictly confidential and exclusively for the Lamborghini Dealer Network and Authorized Service Points. All copyrights are property of Automobili Lamborghini S.p.A based on copyright law. All of the PDF chapters in the WEB workshop manuals described below are based on information available at the time of publication. The company reserves the right to make updates and modifications. The following are prohibited: reprinting, reproduction, forwarding to unauthorized people and/or third parties, and translation, including partial, without written authorization from Automobili Lamborghini S.p.A.

SCHEDULED MAINTENANCE PLAN 7.5 miles (x 1000) - 12 Km (x 1000)

Type	Description	OK	NO	Rectified
	06 Wheels, Brakes			
I	Brake discs and pads **(061501)**			
I	Braking system, pipes and calipers **(060701)**			
R	Brake and clutch fluid level (change every year) **(061101)(061107)**			
I	Tyres and rims: check the tyre tread, pressure and general condition **(060101)**			
	08 Body			
I	Safety belts: check of proper working conditions **(086801)**			
	09 Electrical equipment			
I	Battery: connections and charge **(091501)**			
I	Headlights aiming check **(094101)(094102)**			
	10 Diagnosi			
I	Fault memory enquiry using La-Ra and LDAS. Data printout ant troubleshooting in case of error codes **(109000)(109114)**			
I	ROAD TEST			
	After servicing, complete and stamp the space provided in the warranty booklet and complete the sticker (001200) to be applied onto the door ledge			

I = Inspection and any additional service if required A = Adjustment R = Replacement	NOTE:	Date: Stamp and signature:

* Though not strictly necessary, these operations are recommended if the car has been often driven on dusty roads or in difficult road traffic condition. If these operations are not carried out during the warranty period, the warranty will NOT lapse.

** Use the diagnostic tool to check the condition of the disks. Replace the clutch if the wear exceeds the value indicated in the workshop manual.

® Automobili Lamborghini S.p.A.
The information and procedures published below are strictly confidential and exclusively for the Lamborghini Dealer Network and Authorized Service Points. All copyrights are property of Automobili Lamborghini S.p.A based on copyright law. All of the PDF chapters in the WEB workshop manuals described below are based on information available at the time of publication. The company reserves the right to make updates and modifications. The following are prohibited: reprinting, reproduction, forwarding to unauthorized people and/or third parties, and translation, including partial, without written authorization from Automobili Lamborghini S.p.A.

SCHEDULED MAINTENANCE PLAN 15 miles (x 1000) - 24 Km (x 1000)

Type	Description	OK	NO	Rectified
	Check whether this VIN is affected by any recall or service campaign to be performed			
	01 Engine			
R*	Air filter **(013303)**			
I	Check the coolant level and the degree of antifreeze protection in the cooling circuit **(012101)**			
I - R**	Clutch wear check (for cars with e-gear) **(014203)(109000)**			
I - A	Valve clearance **(010302)**			
R	Engine oil and filter (minimum once per year) **(011707)(011708)**			
	02 Fuel tank, exhaust system, heating			
I	Air conditioning system (inspection at least every year) **(026001)**			
R	Air conditioning system dust filters (at least every two years) **(026001)(026003)**			
	03 Transmission			
R	Gearbox rear and front differential oil **(030107)(030108)**			
I	Gearbox oil: check the level and clean the filter (top up the oil that leaked when cleaning the filter). **(031504)**			
I	Shift control support adjustment inspection **(032301)**			

I = Inspection and any additional service if required
A = Adjustment
R = Replacement

NOTE:

Date:

Stamp and signature:

* Though not strictly necessary, these operations are recommended if the car has been often driven on dusty roads or in difficult road traffic condition. If these operations are not carried out during the warranty period, the warranty will NOT lapse.

** Use the diagnostic tool to check the condition of the disks. Replace the clutch if the wear exceeds the value indicated in the workshop manual.

® Automobili Lamborghini S.p.A.
The information and procedures published below are strictly confidential and exclusively for the Lamborghini Dealer Network and Authorized Service Points. All copyrights are property of Automobili Lamborghini S.p.A based on copyright law. All of the PDF chapters in the WEB workshop manuals described below are based on information available at the time of publication. The company reserves the right to make updates and modifications. The following are prohibited: reprinting, reproduction, forwarding to unauthorized people and/or third parties, and translation, including partial, without written authorization from Automobili Lamborghini S.p.A.

SCHEDULED MAINTENANCE PLAN 15 miles (x 1000) - 24 Km (x 1000)

Type	Description	OK	NO	Rectified
I	Gearbox hydraulic fluid check and top-up e□gear **(014201)**			
	04 Front axle, steering / 05 Rear axle			
I	Steering components, joint protections and boots on the steering rack, steering levers and drive shafts **(041901)**			
I	Power steering fluid **(042308)**			
I	Front and rear suspension articulated joints: visual inspection and check torque is correct **(041101)(051101)**			
	06 Wheels, Brakes			
I	Brake discs and pads **(061501)**			
I	Braking system, pipes and calipers **(060701)**			
I	Brake pedal clearance and handbrake akjustment **(060201)**			
I	Brake and clutch fluid level (change every year) **(061101)(061107)**			
I	Tyres and rims: check the tyre tread, pressure and general condition **(060101)**			
	08 Body			
I	Door and hood hinges lubrication **(080601)(082701)(083701)**			
I	Safety belts: check of proper working conditions **(086801)**			

I = Inspection and any additional service if required
A = Adjustment
R = Replacement

NOTE:

Date:

Stamp and signature:

* Though not strictly necessary, these operations are recommended if the car has been often driven on dusty roads or in difficult road traffic condition. If these operations are not carried out during the warranty period, the warranty will NOT lapse.

** Use the diagnostic tool to check the condition of the disks. Replace the clutch if the wear exceeds the value indicated in the workshop manual.

® Automobili Lamborghini S.p.A.
The information and procedures published below are strictly confidential and exclusively for the Lamborghini Dealer Network and Authorized Service Points. All copyrights are property of Automobili Lamborghini S.p.A based on copyright law. All of the PDF chapters in the WEB workshop manuals described below are based on information available at the time of publication. The company reserves the right to make updates and modifications. The following are prohibited: reprinting, reproduction, forwarding to unauthorized people and/or third parties, and translation, including partial, without written authorization from Automobili Lamborghini S.p.A.

SCHEDULED MAINTENANCE PLAN 15 miles (x 1000) - 24 Km (x 1000)

Type	Description	OK	NO	Rectified
	09 Electrical equipment			
R*	Spark plugs **(090503)**			
I	Battery: connections and charge **(091501)**			
I	Engine accessory drive belt **(090301)(090303)**			
I	Headlights aiming check **(094101)(094102)**			
I	Roll-over bar function test (applicable to the Roadster model only)			
	10 Diagnosi			
I	Fault memory enquiry using La-Ra and LDAS. Data printout ant troubleshooting in case of error codes **(109000)(109114)**			
I	ROAD TEST			
	After servicing, complete and stamp the space provided in the warranty booklet and complete the sticker (001200) to be applied onto the door ledge			

I = Inspection and any additional service if required A = Adjustment R = Replacement	NOTE:	Date: Stamp and signature:

* Though not strictly necessary, these operations are recommended if the car has been often driven on dusty roads or in difficult road traffic condition. If these operations are not carried out during the warranty period, the warranty will NOT lapse.

** Use the diagnostic tool to check the condition of the disks. Replace the clutch if the wear exceeds the value indicated in the workshop manual.

® Automobili Lamborghini S.p.A.
The information and procedures published below are strictly confidential and exclusively for the Lamborghini Dealer Network and Authorized Service Points. All copyrights are property of Automobili Lamborghini S.p.A based on copyright law. All of the PDF chapters in the WEB workshop manuals described below are based on information available at the time of publication. The company reserves the right to make updates and modifications. The following are prohibited: reprinting, reproduction, forwarding to unauthorized people and/or third parties, and translation, including partial, without written authorization from Automobili Lamborghini S.p.A.

SCHEDULED MAINTENANCE PLAN 22.5 miles (x 1000) - 36 Km (x 1000)

Type	Description	OK	NO	Rectified
	Check whether this VIN is affected by any recall or service campaign to be performed			
	01 Engine			
I - R**	Clutch wear check (for cars with e-gear) **(014203)(109000)**			
R	Engine oil and filter (minimum once per year) **(011707)(011708)**			
	02 Fuel tank, exhaust system, heating			
I	Air conditioning system (inspection at least every year) **(026001)**			
I	Air conditioning system dust filters (at least every two years) **(026001)(026003)**			
	03 Transmission			
I	Shift control support adjustment inspection **(032301)**			
	04 Front axle, steering / 05 Rear axle			
I	Steering components, joint protections and boots on the steering rack, steering levers and drive shafts **(041901)**			
I	Front and rear suspension articulated joints: visual inspection and check torque is correct **(041101)(051101)**			

I = Inspection and any additional service if required A = Adjustment R = Replacement	NOTE:	Date: Stamp and signature:

* Though not strictly necessary, these operations are recommended if the car has been often driven on dusty roads or in difficult road traffic condition. If these operations are not carried out during the warranty period, the warranty will NOT lapse.

** Use the diagnostic tool to check the condition of the disks. Replace the clutch if the wear exceeds the value indicated in the workshop manual.

® Automobili Lamborghini S.p.A.
The information and procedures published below are strictly confidential and exclusively for the Lamborghini Dealer Network and Authorized Service Points. All copyrights are property of Automobili Lamborghini S.p.A based on copyright law. All of the PDF chapters in the WEB workshop manuals described below are based on information available at the time of publication. The company reserves the right to make updates and modifications. The following are prohibited: reprinting, reproduction, forwarding to unauthorized people and/or third parties, and translation, including partial, without written authorization from Automobili Lamborghini S.p.A.

SCHEDULED MAINTENANCE PLAN 22.5 miles (x 1000) - 36 Km (x 1000)

Type	Description	OK	NO	Rectified
	06 Wheels, Brakes			
I	Brake discs and pads **(061501)**			
I	Braking system, pipes and calipers **(060701)**			
R	Brake and clutch fluid level (change every year) **(061101)(061107)**			
I	Tyres and rims: check the tyre tread, pressure and general condition **(060101)**			
	08 Body			
I	Safety belts: check of proper working conditions **(086801)**			
	09 Electrical equipment			
I	Battery: connections and charge **(091501)**			
I	Headlights aiming check **(094101)(094102)**			
	10 Diagnosi			
I	Fault memory enquiry using La-Ra and LDAS. Data printout ant troubleshooting in case of error codes **(109000)(109114)**			
I	ROAD TEST			
	After servicing, complete and stamp the space provided in the warranty booklet and complete the sticker (001200) to be applied onto the door ledge			

I = Inspection and any additional service if required A = Adjustment R = Replacement	NOTE:	Date: Stamp and signature:

* Though not strictly necessary, these operations are recommended if the car has been often driven on dusty roads or in difficult road traffic condition. If these operations are not carried out during the warranty period, the warranty will NOT lapse.

** Use the diagnostic tool to check the condition of the disks. Replace the clutch if the wear exceeds the value indicated in the workshop manual.

® Automobili Lamborghini S.p.A.
The information and procedures published below are strictly confidential and exclusively for the Lamborghini Dealer Network and Authorized Service Points. All copyrights are property of Automobili Lamborghini S.p.A based on copyright law. All of the PDF chapters in the WEB workshop manuals described below are based on information available at the time of publication. The company reserves the right to make updates and modifications. The following are prohibited: reprinting, reproduction, forwarding to unauthorized people and/or third parties, and translation, including partial, without written authorization from Automobili Lamborghini S.p.A.

SCHEDULED MAINTENANCE PLAN 30 miles (x 1000) - 48 Km (x 1000)

Type	Description	OK	NO	Rectified
	Check whether this VIN is affected by any recall or service campaign to be performed			
	01 Engine			
R	Fuel filters **(012701)**			
R	Air filter **(013303)**			
I	Injection system: lines and connections **(012801)**			
I	Check the coolant level and the degree of antifreeze protection in the cooling circuit **(012101)**			
I - R**	Clutch wear check (for cars with e-gear) **(014203)(109000)**			
I - A	Valve clearance **(010302)**			
I	Fuel evaporative emission control system **(010302)**			
I	Engine oil emission recirculation control system **(011501)**			
R	Engine oil and filter (minimum once per year) **(011707)(011708)**			
	02 Fuel tank, exhaust system, heating			
I	Air conditioning system (inspection at least every year) **(026001)**			
R	Air conditioning system dust filters (at least every two years) **(026001)(026003)**			

I = Inspection and any additional service if required
A = Adjustment
R = Replacement

NOTE:

Date:

Stamp and signature:

* Though not strictly necessary, these operations are recommended if the car has been often driven on dusty roads or in difficult road traffic condition. If these operations are not carried out during the warranty period, the warranty will NOT lapse.

** Use the diagnostic tool to check the condition of the disks. Replace the clutch if the wear exceeds the value indicated in the workshop manual.

® Automobili Lamborghini S.p.A.
The information and procedures published below are strictly confidential and exclusively for the Lamborghini Dealer Network and Authorized Service Points. All copyrights are property of Automobili Lamborghini S.p.A based on copyright law. All of the PDF chapters in the WEB workshop manuals described below are based on information available at the time of publication. The company reserves the right to make updates and modifications. The following are prohibited: reprinting, reproduction, forwarding to unauthorized people and/or third parties, and translation, including partial, without written authorization from Automobili Lamborghini S.p.A.

SCHEDULED MAINTENANCE PLAN 30 miles (x 1000) - 48 Km (x 1000)

Type	Description	OK	NO	Rectified
	03 Transmission			
R	Gearbox rear and front differential oil **(030107)(030108)**			
I	Gearbox oil: check the level and clean the filter (top up the oil that leaked when cleaning the filter). **(031504)**			
I	Shift control support adjustment inspection **(032301)**			
I	Gearbox hydraulic fluid check and top-up e□gear **(014201)**			
	04 Front axle, steering / 05 Rear axle			
I	Steering components, joint protections and boots on the steering rack, steering levers and drive shafts **(041901)**			
I	Power steering fluid **(042308)**			
I	Front and rear suspension articulated joints: visual inspection and check torque is correct **(041101)(051101)**			
	06 Wheels, Brakes			
I	Brake discs and pads **(061501)**			
I	Braking system, pipes and calipers **(060701)**			
I	Brake pedal clearance and handbrake akjustment **(060201)**			
I	Brake and clutch fluid level (change every year) **(061101)(061107)**			
I	Tyres and rims: check the tyre tread, pressure and general condition **(060101)**			

I = Inspection and any additional service if required A = Adjustment R = Replacement	NOTE:	Date: Stamp and signature:

* Though not strictly necessary, these operations are recommended if the car has been often driven on dusty roads or in difficult road traffic condition. If these operations are not carried out during the warranty period, the warranty will NOT lapse.

** Use the diagnostic tool to check the condition of the disks. Replace the clutch if the wear exceeds the value indicated in the workshop manual.

® Automobili Lamborghini S.p.A.
The information and procedures published below are strictly confidential and exclusively for the Lamborghini Dealer Network and Authorized Service Points. All copyrights are property of Automobili Lamborghini S.p.A based on copyright law. All of the PDF chapters in the WEB workshop manuals described below are based on information available at the time of publication. The company reserves the right to make updates and modifications. The following are prohibited: reprinting, reproduction, forwarding to unauthorized people and/or third parties, and translation, including partial, without written authorization from Automobili Lamborghini S.p.A.

SCHEDULED MAINTENANCE PLAN 30 miles (x 1000) - 48 Km (x 1000)

Type	Description	OK	NO	Rectified
	08 Body			
I	Door and hood hinges lubrication **(080601)(082701)(083701)**			
I	Safety belts: check of proper working conditions **(086801)**			
	09 Electrical equipment			
R	Spark plugs **(090503)**			
I	Battery: connections and charge **(091501)**			
R	Engine accessory drive belt **(090301)(090303)**			
I	Headlights aiming check **(094101)(094102)**			
I	Roll-over bar function test (applicable to the Roadster model only)			
	10 Diagnosi			
I	Fault memory enquiry using La-Ra and LDAS. Data printout ant troubleshooting in case of error codes **(109000)(109114)**			
I*	Idle speed. (**USA CANADA**)			
I	ROAD TEST			
	After servicing, complete and stamp the space provided in the warranty booklet and complete the sticker (001200) to be applied onto the door ledge			

I = Inspection and any additional service if required A = Adjustment R = Replacement	NOTE:	Date: Stamp and signature:

* Though not strictly necessary, these operations are recommended if the car has been often driven on dusty roads or in difficult road traffic condition. If these operations are not carried out during the warranty period, the warranty will NOT lapse.

** Use the diagnostic tool to check the condition of the disks. Replace the clutch if the wear exceeds the value indicated in the workshop manual.

® Automobili Lamborghini S.p.A.
The information and procedures published below are strictly confidential and exclusively for the Lamborghini Dealer Network and Authorized Service Points. All copyrights are property of Automobili Lamborghini S.p.A based on copyright law. All of the PDF chapters in the WEB workshop manuals described below are based on information available at the time of publication. The company reserves the right to make updates and modifications. The following are prohibited: reprinting, reproduction, forwarding to unauthorized people and/or third parties, and translation, including partial, without written authorization from Automobili Lamborghini S.p.A.

SCHEDULED MAINTENANCE PLAN 37.5 miles (x 1000) - 60 Km (x 1000)

Type	Description	OK	NO	Rectified
	Check whether this VIN is affected by any recall or service campaign to be performed			
	01 Engine			
I - R**	Clutch wear check (for cars with e-gear) **(014203)(109000)**			
R	Engine oil and filter (minimum once per year) **(011707)(011708)**			
	02 Fuel tank, exhaust system, heating			
I	Air conditioning system (inspection at least every year) **(026001)**			
I	Air conditioning system dust filters (at least every two years) **(026001)(026003)**			
	03 Transmission			
I	Shift control support adjustment inspection **(032301)**			
	04 Front axle, steering / 05 Rear axle			
I	Steering components, joint protections and boots on the steering rack, steering levers and drive shafts **(041901)**			
I	Front and rear suspension articulated joints: visual inspection and check torque is correct **(041101)(051101)**			

I = Inspection and any additional service if required A = Adjustment R = Replacement	NOTE:	Date: Stamp and signature:

* Though not strictly necessary, these operations are recommended if the car has been often driven on dusty roads or in difficult road traffic condition. If these operations are not carried out during the warranty period, the warranty will NOT lapse.

** Use the diagnostic tool to check the condition of the disks. Replace the clutch if the wear exceeds the value indicated in the workshop manual.

® Automobili Lamborghini S.p.A.
The information and procedures published below are strictly confidential and exclusively for the Lamborghini Dealer Network and Authorized Service Points. All copyrights are property of Automobili Lamborghini S.p.A based on copyright law. All of the PDF chapters in the WEB workshop manuals described below are based on information available at the time of publication. The company reserves the right to make updates and modifications. The following are prohibited: reprinting, reproduction, forwarding to unauthorized people and/or third parties, and translation, including partial, without written authorization from Automobili Lamborghini S.p.A.

SCHEDULED MAINTENANCE PLAN 37.5 miles (x 1000) - 60 Km (x 1000)

Type	Description	OK	NO	Rectified
	06 Wheels, Brakes			
I	Brake discs and pads **(061501)**			
I	Braking system, pipes and calipers **(060701)**			
R	Brake and clutch fluid level (change every year) **(061101)(061107)**			
I	Tyres and rims: check the tyre tread, pressure and general condition **(060101)**			
	08 Body			
I	Safety belts: check of proper working conditions **(086801)**			
	09 Electrical equipment			
I	Battery: connections and charge **(091501)**			
I	Headlights aiming check **(094101)(094102)**			
	10 Diagnosi			
I	Fault memory enquiry using La-Ra and LDAS. Data printout ant troubleshooting in case of error codes **(109000)(109114)**			
I	ROAD TEST			
	After servicing, complete and stamp the space provided in the warranty booklet and complete the sticker (001200) to be applied onto the door ledge			

I = Inspection and any additional service if required A = Adjustment R = Replacement	NOTE:	Date: Stamp and signature:

* Though not strictly necessary, these operations are recommended if the car has been often driven on dusty roads or in difficult road traffic condition. If these operations are not carried out during the warranty period, the warranty will NOT lapse.

** Use the diagnostic tool to check the condition of the disks. Replace the clutch if the wear exceeds the value indicated in the workshop manual.

® Automobili Lamborghini S.p.A.
The information and procedures published below are strictly confidential and exclusively for the Lamborghini Dealer Network and Authorized Service Points. All copyrights are property of Automobili Lamborghini S.p.A based on copyright law. All of the PDF chapters in the WEB workshop manuals described below are based on information available at the time of publication. The company reserves the right to make updates and modifications. The following are prohibited: reprinting, reproduction, forwarding to unauthorized people and/or third parties, and translation, including partial, without written authorization from Automobili Lamborghini S.p.A.

SCHEDULED MAINTENANCE PLAN 45 miles (x 1000) - 72 Km (x 1000)

Type	Description	OK	NO	Rectified
	Check whether this VIN is affected by any recall or service campaign to be performed			
	01 Engine			
R*	Air filter **(013303)**			
I	Check the coolant level and the degree of antifreeze protection in the cooling circuit **(012101)**			
I - R**	Clutch wear check (for cars with e-gear) **(014203)(109000)**			
I - A	Valve clearance **(010302)**			
R	Engine oil and filter (minimum once per year) **(011707)(011708)**			
	02 Fuel tank, exhaust system, heating			
R	Oxygen sensor.			
R	Active charcoal trap.			
I	Air conditioning system (inspection at least every year) **(026001)**			
R	Air conditioning system dust filters (at least every two years) **(026001)(026003)**			
	03 Transmission			
R	Gearbox rear and front differential oil **(030107)(030108)**			

I = Inspection and any additional service if required
A = Adjustment
R = Replacement

NOTE:

Date:

Stamp and signature:

* Though not strictly necessary, these operations are recommended if the car has been often driven on dusty roads or in difficult road traffic condition. If these operations are not carried out during the warranty period, the warranty will NOT lapse.

** Use the diagnostic tool to check the condition of the disks. Replace the clutch if the wear exceeds the value indicated in the workshop manual.

® Automobili Lamborghini S.p.A.
The information and procedures published below are strictly confidential and exclusively for the Lamborghini Dealer Network and Authorized Service Points. All copyrights are property of Automobili Lamborghini S.p.A based on copyright law. All of the PDF chapters in the WEB workshop manuals described below are based on information available at the time of publication. The company reserves the right to make updates and modifications. The following are prohibited: reprinting, reproduction, forwarding to unauthorized people and/or third parties, and translation, including partial, without written authorization from Automobili Lamborghini S.p.A.

SCHEDULED MAINTENANCE PLAN 45 miles (x 1000) - 72 Km (x 1000)

Type	Description	OK	NO	Rectified
I	Gearbox oil: check the level and clean the filter (top up the oil that leaked when cleaning the filter). **(031504)**			
I	Shift control support adjustment inspection **(032301)**			
I	Gearbox hydraulic fluid check and top-up e□gear **(014201)**			
	04 Front axle, steering / 05 Rear axle			
I	Steering components, joint protections and boots on the steering rack, steering levers and drive shafts **(041901)**			
I	Power steering fluid **(042308)**			
I	Front and rear suspension articulated joints: visual inspection and check torque is correct **(041101)(051101)**			
	06 Wheels, Brakes			
I	Brake discs and pads **(061501)**			
I	Braking system, pipes and calipers **(060701)**			
I	Brake pedal clearance and handbrake akjustment **(060201)**			
I	Brake and clutch fluid level (change every year) **(061101)(061107)**			
I	Tyres and rims: check the tyre tread, pressure and general condition **(060101)**			

I = Inspection and any additional service if required
A = Adjustment
R = Replacement

NOTE:

Date:

Stamp and signature:

* Though not strictly necessary, these operations are recommended if the car has been often driven on dusty roads or in difficult road traffic condition. If these operations are not carried out during the warranty period, the warranty will NOT lapse.

** Use the diagnostic tool to check the condition of the disks. Replace the clutch if the wear exceeds the value indicated in the workshop manual.

® Automobili Lamborghini S.p.A.
The information and procedures published below are strictly confidential and exclusively for the Lamborghini Dealer Network and Authorized Service Points. All copyrights are property of Automobili Lamborghini S.p.A based on copyright law. All of the PDF chapters in the WEB workshop manuals described below are based on information available at the time of publication. The company reserves the right to make updates and modifications. The following are prohibited: reprinting, reproduction, forwarding to unauthorized people and/or third parties, and translation, including partial, without written authorization from Automobili Lamborghini S.p.A.

SCHEDULED MAINTENANCE PLAN 45 miles (x 1000) - 72 Km (x 1000)

Type	Description	OK	NO	Rectified
	08 Body			
I	Door and hood hinges lubrication **(080601)(082701)(083701)**			
I	Safety belts: check of proper working conditions **(086801)**			
	09 Electrical equipment			
R*	Spark plugs **(090503)**			
I	Battery: connections and charge **(091501)**			
I	Engine accessory drive belt **(090301)(090303)**			
I	Headlights aiming check **(094101)(094102)**			
I	Roll-over bar function test (applicable to the Roadster model only)			
	10 Diagnosi			
I	Fault memory enquiry using La-Ra and LDAS. Data printout ant troubleshooting in case of error codes **(109000)(109114)**			
I	ROAD TEST			
	After servicing, complete and stamp the space provided in the warranty booklet and complete the sticker (001200) to be applied onto the door ledge			

I = Inspection and any additional service if required A = Adjustment R = Replacement	NOTE:	Date: Stamp and signature:

* Though not strictly necessary, these operations are recommended if the car has been often driven on dusty roads or in difficult road traffic condition. If these operations are not carried out during the warranty period, the warranty will NOT lapse.

** Use the diagnostic tool to check the condition of the disks. Replace the clutch if the wear exceeds the value indicated in the workshop manual.

® Automobili Lamborghini S.p.A.
The information and procedures published below are strictly confidential and exclusively for the Lamborghini Dealer Network and Authorized Service Points. All copyrights are property of Automobili Lamborghini S.p.A based on copyright law. All of the PDF chapters in the WEB workshop manuals described below are based on information available at the time of publication. The company reserves the right to make updates and modifications. The following are prohibited: reprinting, reproduction, forwarding to unauthorized people and/or third parties, and translation, including partial, without written authorization from Automobili Lamborghini S.p.A.

SCHEDULED MAINTENANCE PLAN 52.5 miles (x 1000) - 84 Km (x 1000)

Type	Description	OK	NO	Rectified
	Check whether this VIN is affected by any recall or service campaign to be performed			
	01 Engine			
I - R**	Clutch wear check (for cars with e-gear) **(014203)(109000)**			
R	Engine oil and filter (minimum once per year) **(011707)(011708)**			
	02 Fuel tank, exhaust system, heating			
I	CO /HC concentration. (**USA CANADA**)			
I	Air conditioning system (inspection at least every year) **(026001)**			
I	Air conditioning system dust filters (at least every two years) **(026001)(026003)**			
	03 Transmission			
I	Shift control support adjustment inspection **(032301)**			
	04 Front axle, steering / 05 Rear axle			
I	Steering components, joint protections and boots on the steering rack, steering levers and drive shafts **(041901)**			
I	Front and rear suspension articulated joints: visual inspection and check torque is correct **(041101)(051101)**			

I = Inspection and any additional service if required A = Adjustment R = Replacement	NOTE:	Date: Stamp and signature:

* Though not strictly necessary, these operations are recommended if the car has been often driven on dusty roads or in difficult road traffic condition. If these operations are not carried out during the warranty period, the warranty will NOT lapse.

** Use the diagnostic tool to check the condition of the disks. Replace the clutch if the wear exceeds the value indicated in the workshop manual.

® Automobili Lamborghini S.p.A.
The information and procedures published below are strictly confidential and exclusively for the Lamborghini Dealer Network and Authorized Service Points. All copyrights are property of Automobili Lamborghini S.p.A based on copyright law. All of the PDF chapters in the WEB workshop manuals described below are based on information available at the time of publication. The company reserves the right to make updates and modifications. The following are prohibited: reprinting, reproduction, forwarding to unauthorized people and/or third parties, and translation, including partial, without written authorization from Automobili Lamborghini S.p.A.

SCHEDULED MAINTENANCE PLAN 52.5 miles (x 1000) - 84 Km (x 1000)

Type	Description	OK	NO	Rectified
	06 Wheels, Brakes			
I	Brake discs and pads **(061501)**			
I	Braking system, pipes and calipers **(060701)**			
R	Brake and clutch fluid level (change every year) **(061101)(061107)**			
I	Tyres and rims: check the tyre tread, pressure and general condition **(060101)**			
	08 Body			
I	Safety belts: check of proper working conditions **(086801)**			
	09 Electrical equipment			
I	Battery: connections and charge **(091501)**			
I	Headlights aiming check **(094101)(094102)**			
	10 Diagnosi			
I	Fault memory enquiry using La-Ra and LDAS. Data printout ant troubleshooting in case of error codes **(109000)(109114)**			
I	Crankcase emission control system. (**USA CANADA**)			

I = Inspection and any additional service if required
A = Adjustment
R = Replacement

NOTE:

Date:

Stamp and signature:

* Though not strictly necessary, these operations are recommended if the car has been often driven on dusty roads or in difficult road traffic condition. If these operations are not carried out during the warranty period, the warranty will NOT lapse.

** Use the diagnostic tool to check the condition of the disks. Replace the clutch if the wear exceeds the value indicated in the workshop manual.

® Automobili Lamborghini S.p.A.
The information and procedures published below are strictly confidential and exclusively for the Lamborghini Dealer Network and Authorized Service Points. All copyrights are property of Automobili Lamborghini S.p.A based on copyright law. All of the PDF chapters in the WEB workshop manuals described below are based on information available at the time of publication. The company reserves the right to make updates and modifications. The following are prohibited: reprinting, reproduction, forwarding to unauthorized people and/or third parties, and translation, including partial, without written authorization from Automobili Lamborghini S.p.A.

SCHEDULED MAINTENANCE PLAN 52.5 miles (x 1000) - 84 Km (x 1000)

Type	Description	OK	NO	Rectified
I	ROAD TEST			
	After servicing, complete and stamp the space provided in the warranty booklet and complete the sticker (001200) to be applied onto the door ledge			

I = Inspection and any additional service if required
A = Adjustment
R = Replacement

NOTE:

Date:

Stamp and signature:

* Though not strictly necessary, these operations are recommended if the car has been often driven on dusty roads or in difficult road traffic condition. If these operations are not carried out during the warranty period, the warranty will NOT lapse.

** Use the diagnostic tool to check the condition of the disks. Replace the clutch if the wear exceeds the value indicated in the workshop manual.

® Automobili Lamborghini S.p.A.
The information and procedures published below are strictly confidential and exclusively for the Lamborghini Dealer Network and Authorized Service Points. All copyrights are property of Automobili Lamborghini S.p.A based on copyright law. All of the PDF chapters in the WEB workshop manuals described below are based on information available at the time of publication. The company reserves the right to make updates and modifications. The following are prohibited: reprinting, reproduction, forwarding to unauthorized people and/or third parties, and translation, including partial, without written authorization from Automobili Lamborghini S.p.A.

SCHEDULED MAINTENANCE PLAN 60 miles (x 1000) - 96 Km (x 1000)

Type	Description	OK	NO	Rectified
	Check whether this VIN is affected by any recall or service campaign to be performed			
	01 Engine			
R	Fuel filters **(012701)**			
R	Air filter **(013303)**			
I	Injection system: lines and connections **(012801)**			
I	Check the coolant level and the degree of antifreeze protection in the cooling circuit **(012101)**			
I - R**	Clutch wear check (for cars with e-gear) **(014203)(109000)**			
I - A	Valve clearance **(010302)**			
I	Fuel evaporative emission control system **(010302)**			
I	Engine oil emission recirculation control system **(011501)**			
R	Engine oil and filter (minimum once per year) **(011707)(011708)**			
	02 Fuel tank, exhaust system, heating			
I	Air conditioning system (inspection at least every year) **(026001)**			
R	Air conditioning system dust filters (at least every two years) **(026001)(026003)**			

I = Inspection and any additional service if required
A = Adjustment
R = Replacement

NOTE:

Date:

Stamp and signature:

* Though not strictly necessary, these operations are recommended if the car has been often driven on dusty roads or in difficult road traffic condition. If these operations are not carried out during the warranty period, the warranty will NOT lapse.

** Use the diagnostic tool to check the condition of the disks. Replace the clutch if the wear exceeds the value indicated in the workshop manual.

® Automobili Lamborghini S.p.A.
The information and procedures published below are strictly confidential and exclusively for the Lamborghini Dealer Network and Authorized Service Points. All copyrights are property of Automobili Lamborghini S.p.A based on copyright law. All of the PDF chapters in the WEB workshop manuals described below are based on information available at the time of publication. The company reserves the right to make updates and modifications. The following are prohibited: reprinting, reproduction, forwarding to unauthorized people and/or third parties, and translation, including partial, without written authorization from Automobili Lamborghini S.p.A.

SCHEDULED MAINTENANCE PLAN 60 miles (x 1000) - 96 Km (x 1000)

Type	Description	OK	NO	Rectified
	03 Transmission			
R	Gearbox rear and front differential oil **(030107)(030108)**			
I	Gearbox oil: check the level and clean the filter (top up the oil that leaked when cleaning the filter). **(031504)**			
I	Shift control support adjustment inspection **(032301)**			
I	Gearbox hydraulic fluid check and top-up e□gear **(014201)**			
	04 Front axle, steering / 05 Rear axle			
I	Steering components, joint protections and boots on the steering rack, steering levers and drive shafts **(041901)**			
I	Power steering fluid **(042308)**			
I	Front and rear suspension articulated joints: visual inspection and check torque is correct **(041101)(051101)**			
	06 Wheels, Brakes			
I	Brake discs and pads **(061501)**			
I	Braking system, pipes and calipers **(060701)**			
I	Brake pedal clearance and handbrake akjustment **(060201)**			
I	Brake and clutch fluid level (change every year) **(061101)(061107)**			
I	Tyres and rims: check the tyre tread, pressure and general condition **(060101)**			

I = Inspection and any additional service if required A = Adjustment R = Replacement	NOTE:	Date: Stamp and signature:

* Though not strictly necessary, these operations are recommended if the car has been often driven on dusty roads or in difficult road traffic condition. If these operations are not carried out during the warranty period, the warranty will NOT lapse.

** Use the diagnostic tool to check the condition of the disks. Replace the clutch if the wear exceeds the value indicated in the workshop manual.

® Automobili Lamborghini S.p.A.
The information and procedures published below are strictly confidential and exclusively for the Lamborghini Dealer Network and Authorized Service Points. All copyrights are property of Automobili Lamborghini S.p.A based on copyright law. All of the PDF chapters in the WEB workshop manuals described below are based on information available at the time of publication. The company reserves the right to make updates and modifications. The following are prohibited: reprinting, reproduction, forwarding to unauthorized people and/or third parties, and translation, including partial, without written authorization from Automobili Lamborghini S.p.A.

SCHEDULED MAINTENANCE PLAN 60 miles (x 1000) - 96 Km (x 1000)

Type	Description	OK	NO	Rectified
	08 Body			
I	Door and hood hinges lubrication **(080601)(082701)(083701)**			
I	Safety belts: check of proper working conditions **(086801)**			
	09 Electrical equipment			
R	Spark plugs **(090503)**			
I	Battery: connections and charge **(091501)**			
R	Engine accessory drive belt **(090301)(090303)**			
I	Headlights aiming check **(094101)(094102)**			
I	Roll-over bar function test (applicable to the Roadster model only)			
	10 Diagnosi			
I	Fault memory enquiry using La-Ra and LDAS. Data printout ant troubleshooting in case of error codes **(109000)(109114)**			
I*	Idle speed. (**USA CANADA**)			
I	ROAD TEST			
	After servicing, complete and stamp the space provided in the warranty booklet and complete the sticker (001200) to be applied onto the door ledge			

I = Inspection and any additional service if required A = Adjustment R = Replacement	NOTE:	Date: Stamp and signature:

* Though not strictly necessary, these operations are recommended if the car has been often driven on dusty roads or in difficult road traffic condition. If these operations are not carried out during the warranty period, the warranty will NOT lapse.

** Use the diagnostic tool to check the condition of the disks. Replace the clutch if the wear exceeds the value indicated in the workshop manual.

® Automobili Lamborghini S.p.A.
The information and procedures published below are strictly confidential and exclusively for the Lamborghini Dealer Network and Authorized Service Points. All copyrights are property of Automobili Lamborghini S.p.A based on copyright law. All of the PDF chapters in the WEB workshop manuals described below are based on information available at the time of publication. The company reserves the right to make updates and modifications. The following are prohibited: reprinting, reproduction, forwarding to unauthorized people and/or third parties, and translation, including partial, without written authorization from Automobili Lamborghini S.p.A.

SCHEDULED MAINTENANCE PLAN 67.5 miles (x 1000) - 108 Km (x 1000)

Type	Description	OK	NO	Rectified
	Check whether this VIN is affected by any recall or service campaign to be performed			
	01 Engine			
I - R**	Clutch wear check (for cars with e-gear) **(014203)(109000)**			
R	Engine oil and filter (minimum once per year) **(011707)(011708)**			
	02 Fuel tank, exhaust system, heating			
I	Air conditioning system (inspection at least every year) **(026001)**			
I	Air conditioning system dust filters (at least every two years) **(026001)(026003)**			
	03 Transmission			
I	Shift control support adjustment inspection **(032301)**			
	04 Front axle, steering / 05 Rear axle			
I	Steering components, joint protections and boots on the steering rack, steering levers and drive shafts **(041901)**			
I	Front and rear suspension articulated joints: visual inspection and check torque is correct **(041101)(051101)**			

I = Inspection and any additional service if required
A = Adjustment
R = Replacement

NOTE:

Date:

Stamp and signature:

* Though not strictly necessary, these operations are recommended if the car has been often driven on dusty roads or in difficult road traffic condition. If these operations are not carried out during the warranty period, the warranty will NOT lapse.

** Use the diagnostic tool to check the condition of the disks. Replace the clutch if the wear exceeds the value indicated in the workshop manual.

® Automobili Lamborghini S.p.A.
The information and procedures published below are strictly confidential and exclusively for the Lamborghini Dealer Network and Authorized Service Points. All copyrights are property of Automobili Lamborghini S.p.A based on copyright law. All of the PDF chapters in the WEB workshop manuals described below are based on information available at the time of publication. The company reserves the right to make updates and modifications. The following are prohibited: reprinting, reproduction, forwarding to unauthorized people and/or third parties, and translation, including partial, without written authorization from Automobili Lamborghini S.p.A.

SCHEDULED MAINTENANCE PLAN 67.5 miles (x 1000) - 108 Km (x 1000)

Type	Description	OK	NO	Rectified
	06 Wheels, Brakes			
I	Brake discs and pads **(061501)**			
I	Braking system, pipes and calipers **(060701)**			
R	Brake and clutch fluid level (change every year) **(061101)(061107)**			
I	Tyres and rims: check the tyre tread, pressure and general condition **(060101)**			
	08 Body			
I	Safety belts: check of proper working conditions **(086801)**			
	09 Electrical equipment			
I	Battery: connections and charge **(091501)**			
I	Headlights aiming check **(094101)(094102)**			
	10 Diagnosi			
I	Fault memory enquiry using La-Ra and LDAS. Data printout ant troubleshooting in case of error codes **(109000)(109114)**			
I	ROAD TEST			
	After servicing, complete and stamp the space provided in the warranty booklet and complete the sticker (001200) to be applied onto the door ledge			

I = Inspection and any additional service if required A = Adjustment R = Replacement	NOTE:	Date: Stamp and signature:

* Though not strictly necessary, these operations are recommended if the car has been often driven on dusty roads or in difficult road traffic condition. If these operations are not carried out during the warranty period, the warranty will NOT lapse.

** Use the diagnostic tool to check the condition of the disks. Replace the clutch if the wear exceeds the value indicated in the workshop manual.

® Automobili Lamborghini S.p.A.
The information and procedures published below are strictly confidential and exclusively for the Lamborghini Dealer Network and Authorized Service Points. All copyrights are property of Automobili Lamborghini S.p.A based on copyright law. All of the PDF chapters in the WEB workshop manuals described below are based on information available at the time of publication. The company reserves the right to make updates and modifications. The following are prohibited: reprinting, reproduction, forwarding to unauthorized people and/or third parties, and translation, including partial, without written authorization from Automobili Lamborghini S.p.A.

SCHEDULED MAINTENANCE PLAN 67.5 miles (x 1000) - 108 Km (x 1000)

Type	Description	OK	NO	Rectified

I = Inspection and any additional service if required
A = Adjustment
R = Replacement

NOTE:

Date:

Stamp and signature:

* Though not strictly necessary, these operations are recommended if the car has been often driven on dusty roads or in difficult road traffic condition. If these operations are not carried out during the warranty period, the warranty will NOT lapse.

** Use the diagnostic tool to check the condition of the disks. Replace the clutch if the wear exceeds the value indicated in the workshop manual.

® Automobili Lamborghini S.p.A.
The information and procedures published below are strictly confidential and exclusively for the Lamborghini Dealer Network and Authorized Service Points. All copyrights are property of Automobili Lamborghini S.p.A based on copyright law. All of the PDF chapters in the WEB workshop manuals described below are based on information available at the time of publication. The company reserves the right to make updates and modifications. The following are prohibited: reprinting, reproduction, forwarding to unauthorized people and/or third parties, and translation, including partial, without written authorization from Automobili Lamborghini S.p.A.

SCHEDULED MAINTENANCE PLAN 67.5 miles (x 1000) - 108 Km (x 1000)

Type	Description	OK	NO	Rectified

I = Inspection and any additional service if required
A = Adjustment
R = Replacement

NOTE:

Date:

Stamp and signature:

* Though not strictly necessary, these operations are recommended if the car has been often driven on dusty roads or in difficult road traffic condition. If these operations are not carried out during the warranty period, the warranty will NOT lapse.

** Use the diagnostic tool to check the condition of the disks. Replace the clutch if the wear exceeds the value indicated in the workshop manual.

® Automobili Lamborghini S.p.A.
The information and procedures published below are strictly confidential and exclusively for the Lamborghini Dealer Network and Authorized Service Points. All copyrights are property of Automobili Lamborghini S.p.A based on copyright law. All of the PDF chapters in the WEB workshop manuals described below are based on information available at the time of publication. The company reserves the right to make updates and modifications. The following are prohibited: reprinting, reproduction, forwarding to unauthorized people and/or third parties, and translation, including partial, without written authorization from Automobili Lamborghini S.p.A.

SCHEDULED MAINTENANCE PLAN 75 miles (x 1000) - 120 Km (x 1000)

Type	Description	OK	NO	Rectified
	Check whether this VIN is affected by any recall or service campaign to be performed			
	01 Engine			
R*	Air filter **(013303)**			
I	Check the coolant level and the degree of antifreeze protection in the cooling circuit **(012101)**			
I - R**	Clutch wear check (for cars with e-gear) **(014203)(109000)**			
I - A	Valve clearance **(010302)**			
R	Engine oil and filter (minimum once per year) **(011707)(011708)**			
	02 Fuel tank, exhaust system, heating			
I	Air conditioning system (inspection at least every year) **(026001)**			
R	Air conditioning system dust filters (at least every two years) **(026001)(026003)**			
	03 Transmission			
R	Gearbox rear and front differential oil **(030107)(030108)**			
I	Gearbox oil: check the level and clean the filter (top up the oil that leaked when cleaning the filter). **(031504)**			
I	Shift control support adjustment inspection **(032301)**			

I = Inspection and any additional service if required
A = Adjustment
R = Replacement

NOTE:

Date:

Stamp and signature:

* Though not strictly necessary, these operations are recommended if the car has been often driven on dusty roads or in difficult road traffic condition. If these operations are not carried out during the warranty period, the warranty will NOT lapse.

** Use the diagnostic tool to check the condition of the disks. Replace the clutch if the wear exceeds the value indicated in the workshop manual.

® Automobili Lamborghini S.p.A.
The information and procedures published below are strictly confidential and exclusively for the Lamborghini Dealer Network and Authorized Service Points. All copyrights are property of Automobili Lamborghini S.p.A based on copyright law. All of the PDF chapters in the WEB workshop manuals described below are based on information available at the time of publication. The company reserves the right to make updates and modifications. The following are prohibited: reprinting, reproduction, forwarding to unauthorized people and/or third parties, and translation, including partial, without written authorization from Automobili Lamborghini S.p.A.

SCHEDULED MAINTENANCE PLAN 75 miles (x 1000) - 120 Km (x 1000)

Type	Description	OK	NO	Rectified
I	Gearbox hydraulic fluid check and top-up e□gear **(014201)**			
	04 Front axle, steering / 05 Rear axle			
I	Steering components, joint protections and boots on the steering rack, steering levers and drive shafts **(041901)**			
I	Power steering fluid **(042308)**			
I	Front and rear suspension articulated joints: visual inspection and check torque is correct **(041101)(051101)**			
	06 Wheels, Brakes			
I	Brake discs and pads **(061501)**			
I	Braking system, pipes and calipers **(060701)**			
I	Brake pedal clearance and handbrake akjustment **(060201)**			
I	Brake and clutch fluid level (change every year) **(061101)(061107)**			
I	Tyres and rims: check the tyre tread, pressure and general condition **(060101)**			
	08 Body			
I	Door and hood hinges lubrication **(080601)(082701)(083701)**			
I	Safety belts: check of proper working conditions **(086801)**			

I = Inspection and any additional service if required A = Adjustment R = Replacement	NOTE:	Date: Stamp and signature:

* Though not strictly necessary, these operations are recommended if the car has been often driven on dusty roads or in difficult road traffic condition. If these operations are not carried out during the warranty period, the warranty will NOT lapse.

** Use the diagnostic tool to check the condition of the disks. Replace the clutch if the wear exceeds the value indicated in the workshop manual.

® Automobili Lamborghini S.p.A.
The information and procedures published below are strictly confidential and exclusively for the Lamborghini Dealer Network and Authorized Service Points. All copyrights are property of Automobili Lamborghini S.p.A based on copyright law. All of the PDF chapters in the WEB workshop manuals described below are based on information available at the time of publication. The company reserves the right to make updates and modifications. The following are prohibited: reprinting, reproduction, forwarding to unauthorized people and/or third parties, and translation, including partial, without written authorization from Automobili Lamborghini S.p.A.

SCHEDULED MAINTENANCE PLAN 75 miles (x 1000) - 120 Km (x 1000)

Type	Description	OK	NO	Rectified
	09 Electrical equipment			
R*	Spark plugs **(090503)**			
I	Battery: connections and charge **(091501)**			
I	Engine accessory drive belt **(090301)(090303)**			
I	Headlights aiming check **(094101)(094102)**			
I	Roll-over bar function test (applicable to the Roadster model only)			
	10 Diagnosi			
I	Fault memory enquiry using La-Ra and LDAS. Data printout ant troubleshooting in case of error codes **(109000)(109114)**			
I	ROAD TEST			
	After servicing, complete and stamp the space provided in the warranty booklet and complete the sticker (001200) to be applied onto the door ledge			

I = Inspection and any additional service if required A = Adjustment R = Replacement	NOTE:	Date: Stamp and signature:

* Though not strictly necessary, these operations are recommended if the car has been often driven on dusty roads or in difficult road traffic condition. If these operations are not carried out during the warranty period, the warranty will NOT lapse.

** Use the diagnostic tool to check the condition of the disks. Replace the clutch if the wear exceeds the value indicated in the workshop manual.

® Automobili Lamborghini S.p.A.
The information and procedures published below are strictly confidential and exclusively for the Lamborghini Dealer Network and Authorized Service Points. All copyrights are property of Automobili Lamborghini S.p.A based on copyright law. All of the PDF chapters in the WEB workshop manuals described below are based on information available at the time of publication. The company reserves the right to make updates and modifications. The following are prohibited: reprinting, reproduction, forwarding to unauthorized people and/or third parties, and translation, including partial, without written authorization from Automobili Lamborghini S.p.A.

SCHEDULED MAINTENANCE PLAN 75 miles (x 1000) - 120 Km (x 1000)

Type	Description	OK	NO	Rectified

I = Inspection and any additional service if required
A = Adjustment
R = Replacement

NOTE:

Date:

Stamp and signature:

* Though not strictly necessary, these operations are recommended if the car has been often driven on dusty roads or in difficult road traffic condition. If these operations are not carried out during the warranty period, the warranty will NOT lapse.

** Use the diagnostic tool to check the condition of the disks. Replace the clutch if the wear exceeds the value indicated in the workshop manual.

® Automobili Lamborghini S.p.A.
The information and procedures published below are strictly confidential and exclusively for the Lamborghini Dealer Network and Authorized Service Points. All copyrights are property of Automobili Lamborghini S.p.A based on copyright law. All of the PDF chapters in the WEB workshop manuals described below are based on information available at the time of publication. The company reserves the right to make updates and modifications. The following are prohibited: reprinting, reproduction, forwarding to unauthorized people and/or third parties, and translation, including partial, without written authorization from Automobili Lamborghini S.p.A.

USA
CANADA

SCHEDULED MAINTENANCE PLAN 82.5 miles (x 1000) - 132 Km (x 1000)

Type	Description	OK	NO	Rectified
	Check whether this VIN is affected by any recall or service campaign to be performed			
	01 Engine			
I - R**	Clutch wear check (for cars with e-gear) **(014203)(109000)**			
R	Engine oil and filter (minimum once per year) **(011707)(011708)**			
	02 Fuel tank, exhaust system, heating			
I	Air conditioning system (inspection at least every year) **(026001)**			
I	Air conditioning system dust filters (at least every two years) **(026001)(026003)**			
	03 Transmission			
I	Shift control support adjustment inspection **(032301)**			
	04 Front axle, steering / 05 Rear axle			
I	Steering components, joint protections and boots on the steering rack, steering levers and drive shafts **(041901)**			
I	Front and rear suspension articulated joints: visual inspection and check torque is correct **(041101)(051101)**			

I = Inspection and any additional service if required
A = Adjustment
R = Replacement

NOTE:

Date:

Stamp and signature:

* Though not strictly necessary, these operations are recommended if the car has been often driven on dusty roads or in difficult road traffic condition. If these operations are not carried out during the warranty period, the warranty will NOT lapse.

** Use the diagnostic tool to check the condition of the disks. Replace the clutch if the wear exceeds the value indicated in the workshop manual.

® Automobili Lamborghini S.p.A.
The information and procedures published below are strictly confidential and exclusively for the Lamborghini Dealer Network and Authorized Service Points. All copyrights are property of Automobili Lamborghini S.p.A based on copyright law. All of the PDF chapters in the WEB workshop manuals described below are based on information available at the time of publication. The company reserves the right to make updates and modifications. The following are prohibited: reprinting, reproduction, forwarding to unauthorized people and/or third parties, and translation, including partial, without written authorization from Automobili Lamborghini S.p.A.

USA
CANADA

SCHEDULED MAINTENANCE PLAN 82.5 miles (x 1000) - 132 Km (x 1000)

Type	Description	OK	NO	Rectified
	06 Wheels, Brakes			
I	Brake discs and pads **(061501)**			
I	Braking system, pipes and calipers **(060701)**			
R	Brake and clutch fluid level (change every year) **(061101)(061107)**			
I	Tyres and rims: check the tyre tread, pressure and general condition **(060101)**			
	08 Body			
I	Safety belts: check of proper working conditions **(086801)**			
	09 Electrical equipment			
I	Battery: connections and charge **(091501)**			
I	Headlights aiming check **(094101)(094102)**			
	10 Diagnosi			
I	Fault memory enquiry using La-Ra and LDAS. Data printout ant troubleshooting in case of error codes **(109000)(109114)**			
I	ROAD TEST			
	After servicing, complete and stamp the space provided in the warranty booklet and complete the sticker (001200) to be applied onto the door ledge			

I = Inspection and any additional service if required
A = Adjustment
R = Replacement

NOTE:

Date:

Stamp and signature:

* Though not strictly necessary, these operations are recommended if the car has been often driven on dusty roads or in difficult road traffic condition. If these operations are not carried out during the warranty period, the warranty will NOT lapse.

** Use the diagnostic tool to check the condition of the disks. Replace the clutch if the wear exceeds the value indicated in the workshop manual.

® Automobili Lamborghini S.p.A.
The information and procedures published below are strictly confidential and exclusively for the Lamborghini Dealer Network and Authorized Service Points. All copyrights are property of Automobili Lamborghini S.p.A based on copyright law. All of the PDF chapters in the WEB workshop manuals described below are based on information available at the time of publication. The company reserves the right to make updates and modifications. The following are prohibited: reprinting, reproduction, forwarding to unauthorized people and/or third parties, and translation, including partial, without written authorization from Automobili Lamborghini S.p.A.

USA
CANADA

SCHEDULED MAINTENANCE PLAN 90 miles (x 1000) - 144 Km (x 1000)

Type	Description	OK	NO	Rectified
	Check whether this VIN is affected by any recall or service campaign to be performed			
	01 Engine			
R	Fuel filters **(012701)**			
R	Air filter **(013303)**			
I	Injection system: lines and connections **(012801)**			
I	Check the coolant level and the degree of antifreeze protection in the cooling circuit **(012101)**			
I - R**	Clutch wear check (for cars with e-gear) **(014203)(109000)**			
I - A	Valve clearance **(010302)**			
I	Fuel evaporative emission control system **(010302)**			
I	Engine oil emission recirculation control system **(011501)**			
R	Engine oil and filter (minimum once per year) **(011707)(011708)**			
	02 Fuel tank, exhaust system, heating			
I	Air conditioning system (inspection at least every year) **(026001)**			
R	Air conditioning system dust filters (at least every two years) **(026001)(026003)**			

I = Inspection and any additional service if required
A = Adjustment
R = Replacement

NOTE:

Date:

Stamp and signature:

* Though not strictly necessary, these operations are recommended if the car has been often driven on dusty roads or in difficult road traffic condition. If these operations are not carried out during the warranty period, the warranty will NOT lapse.

** Use the diagnostic tool to check the condition of the disks. Replace the clutch if the wear exceeds the value indicated in the workshop manual.

® Automobili Lamborghini S.p.A.
The information and procedures published below are strictly confidential and exclusively for the Lamborghini Dealer Network and Authorized Service Points. All copyrights are property of Automobili Lamborghini S.p.A based on copyright law. All of the PDF chapters in the WEB workshop manuals described below are based on information available at the time of publication. The company reserves the right to make updates and modifications. The following are prohibited: reprinting, reproduction, forwarding to unauthorized people and/or third parties, and translation, including partial, without written authorization from Automobili Lamborghini S.p.A.

SCHEDULED MAINTENANCE PLAN 90 miles (x 1000) - 144 Km (x 1000)

USA
CANADA

Type	Description	OK	NO	Rectified
	03 Transmission			
R	Gearbox rear and front differential oil **(030107)(030108)**			
I	Gearbox oil: check the level and clean the filter (top up the oil that leaked when cleaning the filter). **(031504)**			
I	Shift control support adjustment inspection **(032301)**			
I	Gearbox hydraulic fluid check and top-up e□gear **(014201)**			
	04 Front axle, steering / 05 Rear axle			
I	Steering components, joint protections and boots on the steering rack, steering levers and drive shafts **(041901)**			
I	Power steering fluid **(042308)**			
I	Front and rear suspension articulated joints: visual inspection and check torque is correct **(041101)(051101)**			
	06 Wheels, Brakes			
I	Brake discs and pads **(061501)**			
I	Braking system, pipes and calipers **(060701)**			
I	Brake pedal clearance and handbrake akjustment **(060201)**			
I	Brake and clutch fluid level (change every year) **(061101)(061107)**			
I	Tyres and rims: check the tyre tread, pressure and general condition **(060101)**			

I = Inspection and any additional service if required
A = Adjustment
R = Replacement

NOTE:

Date:

Stamp and signature:

* Though not strictly necessary, these operations are recommended if the car has been often driven on dusty roads or in difficult road traffic condition. If these operations are not carried out during the warranty period, the warranty will NOT lapse.

** Use the diagnostic tool to check the condition of the disks. Replace the clutch if the wear exceeds the value indicated in the workshop manual.

® Automobili Lamborghini S.p.A.
The information and procedures published below are strictly confidential and exclusively for the Lamborghini Dealer Network and Authorized Service Points. All copyrights are property of Automobili Lamborghini S.p.A based on copyright law. All of the PDF chapters in the WEB workshop manuals described below are based on information available at the time of publication. The company reserves the right to make updates and modifications. The following are prohibited: reprinting, reproduction, forwarding to unauthorized people and/or third parties, and translation, including partial, without written authorization from Automobili Lamborghini S.p.A.

USA
CANADA

SCHEDULED MAINTENANCE PLAN 90 miles (x 1000) - 144 Km (x 1000)

Type	Description	OK	NO	Rectified
	08 Body			
I	Door and hood hinges lubrication **(080601)(082701)(083701)**			
I	Safety belts: check of proper working conditions **(086801)**			
	09 Electrical equipment			
R	Spark plugs **(090503)**			
I	Battery: connections and charge **(091501)**			
R	Engine accessory drive belt **(090301)(090303)**			
I	Headlights aiming check **(094101)(094102)**			
I	Roll-over bar function test (applicable to the Roadster model only)			
	10 Diagnosi			
I	Fault memory enquiry using La-Ra and LDAS. Data printout ant troubleshooting in case of error codes **(109000)(109114)**			
I	ROAD TEST			
	After servicing, complete and stamp the space provided in the warranty booklet and complete the sticker (001200) to be applied onto the door ledge			

I = Inspection and any additional service if required A = Adjustment R = Replacement	NOTE:	Date: Stamp and signature:

* Though not strictly necessary, these operations are recommended if the car has been often driven on dusty roads or in difficult road traffic condition. If these operations are not carried out during the warranty period, the warranty will NOT lapse.

** Use the diagnostic tool to check the condition of the disks. Replace the clutch if the wear exceeds the value indicated in the workshop manual.

® Automobili Lamborghini S.p.A.
The information and procedures published below are strictly confidential and exclusively for the Lamborghini Dealer Network and Authorized Service Points. All copyrights are property of Automobili Lamborghini S.p.A based on copyright law. All of the PDF chapters in the WEB workshop manuals described below are based on information available at the time of publication. The company reserves the right to make updates and modifications. The following are prohibited: reprinting, reproduction, forwarding to unauthorized people and/or third parties, and translation, including partial, without written authorization from Automobili Lamborghini S.p.A.

USA
CANADA

SCHEDULED MAINTENANCE PLAN 97.5 miles (x 1000) - 156 Km (x 1000)

Type	Description	OK	NO	Rectified
	Check whether this VIN is affected by any recall or service campaign to be performed			
	01 Engine			
I - R**	Clutch wear check (for cars with e-gear) **(014203)(109000)**			
R	Engine oil and filter (minimum once per year) **(011707)(011708)**			
	02 Fuel tank, exhaust system, heating			
I	Air conditioning system (inspection at least every year) **(026001)**			
I	Air conditioning system dust filters (at least every two years) **(026001)(026003)**			
	03 Transmission			
I	Shift control support adjustment inspection **(032301)**			
	04 Front axle, steering / 05 Rear axle			
I	Steering components, joint protections and boots on the steering rack, steering levers and drive shafts **(041901)**			
I	Front and rear suspension articulated joints: visual inspection and check torque is correct **(041101)(051101)**			

I = Inspection and any additional service if required
A = Adjustment
R = Replacement

NOTE:

Date:

Stamp and signature:

* Though not strictly necessary, these operations are recommended if the car has been often driven on dusty roads or in difficult road traffic condition. If these operations are not carried out during the warranty period, the warranty will NOT lapse.

** Use the diagnostic tool to check the condition of the disks. Replace the clutch if the wear exceeds the value indicated in the workshop manual.

® Automobili Lamborghini S.p.A.
The information and procedures published below are strictly confidential and exclusively for the Lamborghini Dealer Network and Authorized Service Points. All copyrights are property of Automobili Lamborghini S.p.A based on copyright law. All of the PDF chapters in the WEB workshop manuals described below are based on information available at the time of publication. The company reserves the right to make updates and modifications. The following are prohibited: reprinting, reproduction, forwarding to unauthorized people and/or third parties, and translation, including partial, without written authorization from Automobili Lamborghini S.p.A.

USA
CANADA

SCHEDULED MAINTENANCE PLAN 97.5 miles (x 1000) - 156 Km (x 1000)

Type	Description	OK	NO	Rectified
	06 Wheels, Brakes			
I	Brake discs and pads **(061501)**			
I	Braking system, pipes and calipers **(060701)**			
R	Brake and clutch fluid level (change every year) **(061101)(061107)**			
I	Tyres and rims: check the tyre tread, pressure and general condition **(060101)**			
	08 Body			
I	Safety belts: check of proper working conditions **(086801)**			
	09 Electrical equipment			
I	Battery: connections and charge **(091501)**			
I	Headlights aiming check **(094101)(094102)**			
	10 Diagnosi			
I	Fault memory enquiry using La-Ra and LDAS. Data printout ant troubleshooting in case of error codes **(109000)(109114)**			
I	ROAD TEST			
	After servicing, complete and stamp the space provided in the warranty booklet and complete the sticker (001200) to be applied onto the door ledge			

I = Inspection and any additional service if required
A = Adjustment
R = Replacement

NOTE:

Date:

Stamp and signature:

* Though not strictly necessary, these operations are recommended if the car has been often driven on dusty roads or in difficult road traffic condition. If these operations are not carried out during the warranty period, the warranty will NOT lapse.

** Use the diagnostic tool to check the condition of the disks. Replace the clutch if the wear exceeds the value indicated in the workshop manual.

® Automobili Lamborghini S.p.A.
The information and procedures published below are strictly confidential and exclusively for the Lamborghini Dealer Network and Authorized Service Points. All copyrights are property of Automobili Lamborghini S.p.A based on copyright law. All of the PDF chapters in the WEB workshop manuals described below are based on information available at the time of publication. The company reserves the right to make updates and modifications. The following are prohibited: reprinting, reproduction, forwarding to unauthorized people and/or third parties, and translation, including partial, without written authorization from Automobili Lamborghini S.p.A.

USA
CANADA

SCHEDULED MAINTENANCE PLAN 105 miles (x 1000) - 168 Km (x 1000)

Type	Description	OK	NO	Rectified
	Check whether this VIN is affected by any recall or service campaign to be performed			
	01 Engine			
R*	Air filter **(013303)**			
I	Check the coolant level and the degree of antifreeze protection in the cooling circuit **(012101)**			
I - R**	Clutch wear check (for cars with e-gear) **(014203)(109000)**			
I - A	Valve clearance **(010302)**			
R	Engine oil and filter (minimum once per year) **(011707)(011708)**			
	02 Fuel tank, exhaust system, heating			
I	CO /HC concentration.			
I	Air conditioning system (inspection at least every year) **(026001)**			
R	Air conditioning system dust filters (at least every two years) **(026001)(026003)**			
	03 Transmission			
R	Gearbox rear and front differential oil **(030107)(030108)**			
I	Gearbox oil: check the level and clean the filter (top up the oil that leaked when cleaning the filter). **(031504)**			

I = Inspection and any additional service if required
A = Adjustment
R = Replacement

NOTE:

Date:

Stamp and signature:

* Though not strictly necessary, these operations are recommended if the car has been often driven on dusty roads or in difficult road traffic condition. If these operations are not carried out during the warranty period, the warranty will NOT lapse.

** Use the diagnostic tool to check the condition of the disks. Replace the clutch if the wear exceeds the value indicated in the workshop manual.

® Automobili Lamborghini S.p.A.
The information and procedures published below are strictly confidential and exclusively for the Lamborghini Dealer Network and Authorized Service Points. All copyrights are property of Automobili Lamborghini S.p.A based on copyright law. All of the PDF chapters in the WEB workshop manuals described below are based on information available at the time of publication. The company reserves the right to make updates and modifications. The following are prohibited: reprinting, reproduction, forwarding to unauthorized people and/or third parties, and translation, including partial, without written authorization from Automobili Lamborghini S.p.A.

USA
CANADA

SCHEDULED MAINTENANCE PLAN 105 miles (x 1000) - 168 Km (x 1000)

Type	Description	OK	NO	Rectified
I	Shift control support adjustment inspection **(032301)**			
I	Gearbox hydraulic fluid check and top-up e□gear **(014201)**			
	04 Front axle, steering / 05 Rear axle			
I	Steering components, joint protections and boots on the steering rack, steering levers and drive shafts **(041901)**			
I	Power steering fluid **(042308)**			
I	Front and rear suspension articulated joints: visual inspection and check torque is correct **(041101)(051101)**			
	06 Wheels, Brakes			
I	Brake discs and pads **(061501)**			
I	Braking system, pipes and calipers **(060701)**			
I	Brake pedal clearance and handbrake akjustment **(060201)**			
I	Brake and clutch fluid level (change every year) **(061101)(061107)**			
I	Tyres and rims: check the tyre tread, pressure and general condition **(060101)**			
	08 Body			
I	Door and hood hinges lubrication **(080601)(082701)(083701)**			

I = Inspection and any additional service if required
A = Adjustment
R = Replacement

NOTE:

Date:

Stamp and signature:

* Though not strictly necessary, these operations are recommended if the car has been often driven on dusty roads or in difficult road traffic condition. If these operations are not carried out during the warranty period, the warranty will NOT lapse.

** Use the diagnostic tool to check the condition of the disks. Replace the clutch if the wear exceeds the value indicated in the workshop manual.

® Automobili Lamborghini S.p.A.
The information and procedures published below are strictly confidential and exclusively for the Lamborghini Dealer Network and Authorized Service Points. All copyrights are property of Automobili Lamborghini S.p.A based on copyright law. All of the PDF chapters in the WEB workshop manuals described below are based on information available at the time of publication. The company reserves the right to make updates and modifications. The following are prohibited: reprinting, reproduction, forwarding to unauthorized people and/or third parties, and translation, including partial, without written authorization from Automobili Lamborghini S.p.A.

USA
CANADA

SCHEDULED MAINTENANCE PLAN 105 miles (x 1000) - 168 Km (x 1000)

Type	Description	OK	NO	Rectified
I	Safety belts: check of proper working conditions **(086801)**			
	09 Electrical equipment			
R*	Spark plugs **(090503)**			
I	Battery: connections and charge **(091501)**			
I	Engine accessory drive belt **(090301)(090303)**			
I	Headlights aiming check **(094101)(094102)**			
I	Roll-over bar function test (applicable to the Roadster model only)			
	10 Diagnosi			
I	Fault memory enquiry using La-Ra and LDAS. Data printout ant troubleshooting in case of error codes **(109000)(109114)**			
I	Idle speed.			
I	Crankcase emission control system.			
I	ROAD TEST			
	After servicing, complete and stamp the space provided in the warranty booklet and complete the sticker (001200) to be applied onto the door ledge			

I = Inspection and any additional service if required A = Adjustment R = Replacement	NOTE:	Date: Stamp and signature:

* Though not strictly necessary, these operations are recommended if the car has been often driven on dusty roads or in difficult road traffic condition. If these operations are not carried out during the warranty period, the warranty will NOT lapse.

** Use the diagnostic tool to check the condition of the disks. Replace the clutch if the wear exceeds the value indicated in the workshop manual.

® Automobili Lamborghini S.p.A.
The information and procedures published below are strictly confidential and exclusively for the Lamborghini Dealer Network and Authorized Service Points. All copyrights are property of Automobili Lamborghini S.p.A based on copyright law. All of the PDF chapters in the WEB workshop manuals described below are based on information available at the time of publication. The company reserves the right to make updates and modifications. The following are prohibited: reprinting, reproduction, forwarding to unauthorized people and/or third parties, and translation, including partial, without written authorization from Automobili Lamborghini S.p.A.

Engine

When working on vehicles equipped with LIE engine control system, the following rules must be observed:

- Never start up the engine when the electrical connection terminals are badly connected or loosened on the battery terminals;
- Do not use a fast battery charger to start the engine;
- Never disconnect the battery from the electrical system when the engine is running;

CAUTION!

To carry out the fast charging, first disconnect the battery from the electrical system.

- If the vehicle goes into a drying oven at a temperature over 80°C after varnishing, the system control units must be disassembled and removed from the vehicle;
- Do not connect/disconnect the control unit multiple connector with the ignition switch in “ON” position;
- Disconnect the LIE, PMC, GFA and ETB control unit connectors before carrying out any electrical welding on the vehicle;
- Always disconnect the LIE small connector before disconnecting the big one. When connecting again, connect the big connector before connecting the small one;
- Disconnect all the electronic control units and in particular the LIE, GFA and ETB control units.

STOP **The LIE engine control system is self-adaptive, and therefore no adjustment of the mixture strength at idle is required.**

® Automobili Lamborghini S.p.A.
The information and procedures published below are strictly confidential and exclusively for the Lamborghini Dealer Network and Authorized Service Points. All copyrights are property of Automobili Lamborghini S.p.A based on copyright law. All of the PDF chapters in the WEB workshop manuals described below are based on information available at the time of publication. The company reserves the right to make updates and modifications. The following are prohibited: reprinting, reproduction, forwarding to unauthorized people and/or third parties, and translation, including partial, without written authorization from Automobili Lamborghini S.p.A.

Otto cycle 4-intake-stroke engine, 12 V cylinders at 60°, 4-valve timing system for each cylinder, double chain-controlled double overhead camshaft, intake and exhaust phase transformers, indirect MPI injection (one injector per cylinder), static electronic ignition (one coil per cylinder), variable length duct and throttle bodies controlled by its control units, liquid cooling system with double radiator, dry pan lubrication with double pump controlled by independent chain and oil radiator, gas emissions recycling system, six in two in one exhaust system with catalyst and exhaust noise control system.
Aluminium alloy and H+T silicon “open deck” type crankcase with wet inserted liners.

The cylinder heads are aluminium alloy and H+T silicon, with bronze valve guides and cast iron valve seats.

Cr Mo H+T steel crankshaft, working surfaces are hardened by gaseous nitriding. The main bearings are smooth.
The main bearing caps are integrated in a block structure to give maximum stiffness.

STOP **Each time the crankshaft is undersized, it is most important to restore the surface hardness by special heat treatment.**

Steel alloy cylinder liners with Nikasil-treated internal surfaces. This treatment ensures a very high surface hardness.

STOP **This type of liners cannot be lapped.**

Steel connecting rods with modular head, smooth bearings at big and small ends.

Pressed light alloy pistons with three rings (two seals and one oil ring).

® Automobili Lamborghini S.p.A.
The information and procedures published below are strictly confidential and exclusively for the Lamborghini Dealer Network and Authorized Service Points. All copyrights are property of Automobili Lamborghini S.p.A based on copyright law. All of the PDF chapters in the WEB workshop manuals described below are based on information available at the time of publication. The company reserves the right to make updates and modifications. The following are prohibited: reprinting, reproduction, forwarding to unauthorized people and/or third parties, and translation, including partial, without written authorization from Automobili Lamborghini S.p.A.

The timing system consists of two overhead camshafts for each cylinder bank, controlled by double chains with phase transformer on intake and exhaust shafts. Motion is transmitted directly from the crankshaft to two gear wheels by means of a double chain. Each of these gear wheels in its turn controls the two camshafts of each head by means of double chains.
The chain tension is ensured by hydraulic chain tighteners that operate with the lubrication circuit oil.

Timing system (Fig.1)	
1.	Engine oil pump chain
2.	Cylinder bank 7-12 timing chain
3.	Cylinder bank 7-12 timing chain tightener
4.	Cylinder bank 1-6 timing chain
5.	Cylinder bank 1-6 timing chain tightener
6.	Lower chain
7.	Lower chain tightener
8.	Engine oil pump chain tightener

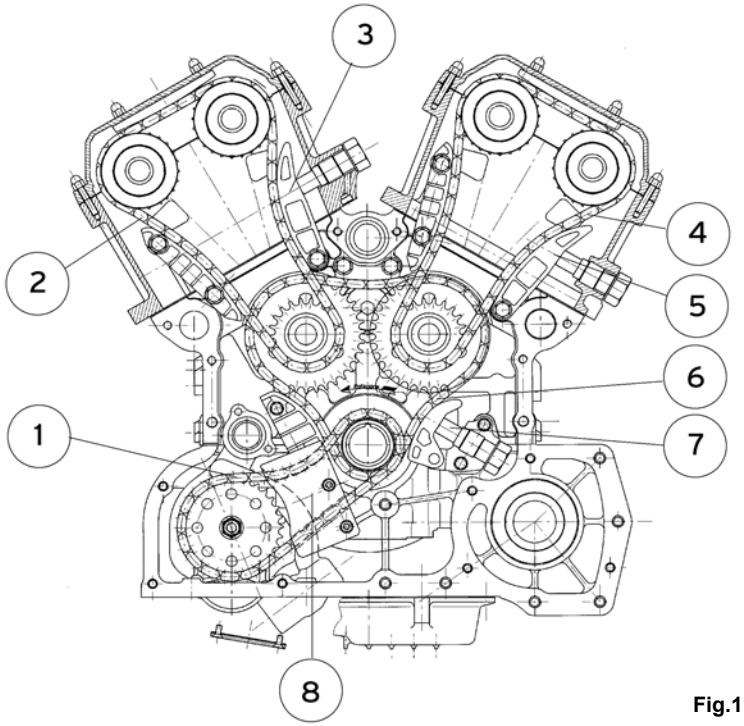

Fig.1

® Automobili Lamborghini S.p.A.
The information and procedures published below are strictly confidential and exclusively for the Lamborghini Dealer Network and Authorized Service Points. All copyrights are property of Automobili Lamborghini S.p.A based on copyright law. All of the PDF chapters in the WEB workshop manuals described below are based on information available at the time of publication. The company reserves the right to make updates and modifications. The following are prohibited: reprinting, reproduction, forwarding to unauthorized people and/or third parties, and translation, including partial, without written authorization from Automobili Lamborghini S.p.A.

The engine rotation is counterclockwise (as seen from the timing side).
The engine cylinder banks are defined as right and left hand as seen from the flywheel side.
The No. 1 cylinder is the first of the left hand cylinder bank near the flywheel, the numbering continues following a “U” towards the right hand cylinder bank.

1.	Engine flywheel side
2.	Timing side
3.	Direction of rotation (counterclockwise from timing side)
4.	Travel direction
LH = Left hand cylinder bank (cylinder bank 1-6)	
RH = Right hand cylinder bank (cylinder bank 7-12)	

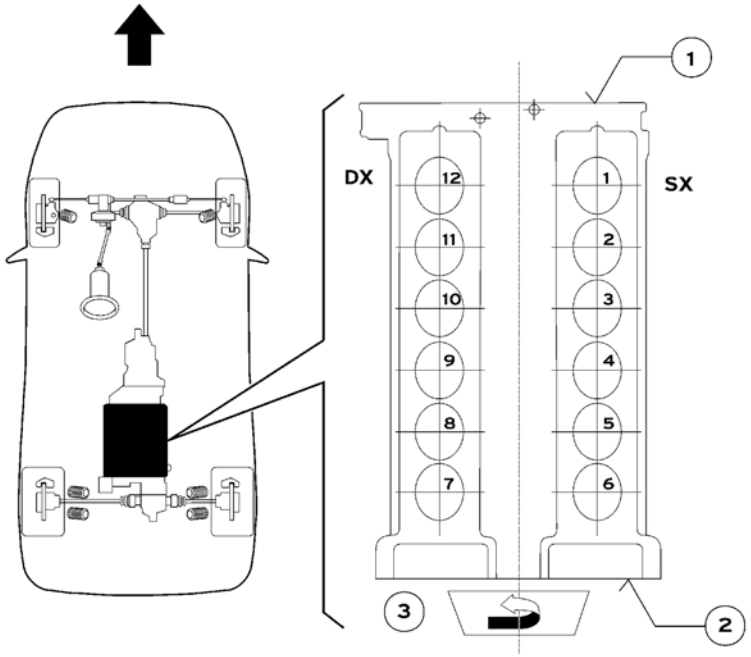

Fig.2

® Automobili Lamborghini S.p.A.
The information and procedures published below are strictly confidential and exclusively for the Lamborghini Dealer Network and Authorized Service Points. All copyrights are property of Automobili Lamborghini S.p.A based on copyright law. All of the PDF chapters in the WEB workshop manuals described below are based on information available at the time of publication. The company reserves the right to make updates and modifications. The following are prohibited: reprinting, reproduction, forwarding to unauthorized people and/or third parties, and translation, including partial, without written authorization from Automobili Lamborghini S.p.A.

Engine disassembly

This operation requires a car lift and a hoist with a rocking lever and 4 chains to sling the engine, to be fixed on the exhaust manifold hooks.
The engine-drive assembly can be removed from the rear part of the vehicle, once it has been correctly slung by means of a hoist and once all the mechanical elements, wiring harnesses, pipes and hoses which connect it to the chassis-body have been disconnected.

Preliminary Operations

- Remove completely the battery disconnect knob in order to be absolutely sure of the battery disconnection.
- Drain the air conditioning system by means of the collection/filling-up system connected to the specific port.
- Empty the engine water system and disconnect the pipes between the radiator and engine.

Engine disassembly

1. Remove the engine hood shock absorber lower mounts and remove the engine hood **(082703)**.
2. Remove the side panels and the silencer safety grid **(025103)**.
3. Remove upper part of both air filter intake boxes and disconnect the air intake pipes mounting clamps from the DBW **(013303)**.
4. Remove the rear finish grid taking care of the license plate lights **(081303 - 094303)**.
5. Disconnect the engine hood lock connectors and remove the lock **(082703)**.
6. Disassemble the engine hood **(082703).**
7. Remove the silencer heat-proof covering **(025103)**.
8. Remove the engine compartment central panel **(081303)**.
9. Disconnect the vacuum pipes from the left and right heads.
10. Remove the upper panel.
11. Remove completely the driver side intake box.
12. Remove the fuel pipes to the injection rails and the return pipes to the tank **(012803)**.
13. Remove the oil breather pipes from the engine oil tank.
14. Remove the driver side ignition connector.
15. Remove the brake booster and NCS vacuum pipes (if present).
16. Disconnect the passenger side VIS/VES solenoid valve pipes.
17. Disconnect the driver side canister pipes.
18. Disconnect the breather pipe from the expansion tank.

® Automobili Lamborghini S.p.A.
The information and procedures published below are strictly confidential and exclusively for the Lamborghini Dealer Network and Authorized Service Points. All copyrights are property of Automobili Lamborghini S.p.A based on copyright law. All of the PDF chapters in the WEB workshop manuals described below are based on information available at the time of publication. The company reserves the right to make updates and modifications. The following are prohibited: reprinting, reproduction, forwarding to unauthorized people and/or third parties, and translation, including partial, without written authorization from Automobili Lamborghini S.p.A.

Under the vehicle

19. Drain and collect the engine oil removing the proper plug from under the oil tank (about 9 liters) **(011707).**
20. Drain completely the oil (about 2 liters) from the oil pan removing the proper drain plug **(011707).**
21. Disconnect the inlet and outlet pipe from the oil pan **(011703).**
22. Unscrew the clamps and lower the exhaust terminals by keeping them a safe way **(025103).**
23. From inside the vehicle, remove the panel and the gearshift on the tunnel **(086803).**
24. Remove the lower front drive cross member elements **(052103).**
25. Remove the silencer mounting devices **(025103).**
26. Remove the front drive mounting bolts **(030103).**
27. Remove the ground plaited cable on the left side of the engine.
28. Remove the rear axle shaft screws (6 per side) and disconnect the rear axle shafts **(050103).**
29. Separate the shaft from the front differential **(052103).**
30. Unscrew the two engine side 24-mm mounting bolts.
31. Disconnect the cable (positive) from the starter **(091103).**
32. Separate the clutch oil pipe and plug its end: arrange the pipe so that it can cause no trouble.
33. Remove the axle shafts from the rear differential.
34. Support the gearbox by means of a specific lifting device by inserting a wooden piece (**A-Fig.1**) and lever by means of a crowbar to move the engine towards the rear part in order to disconnect the front differential from the drive pipe.

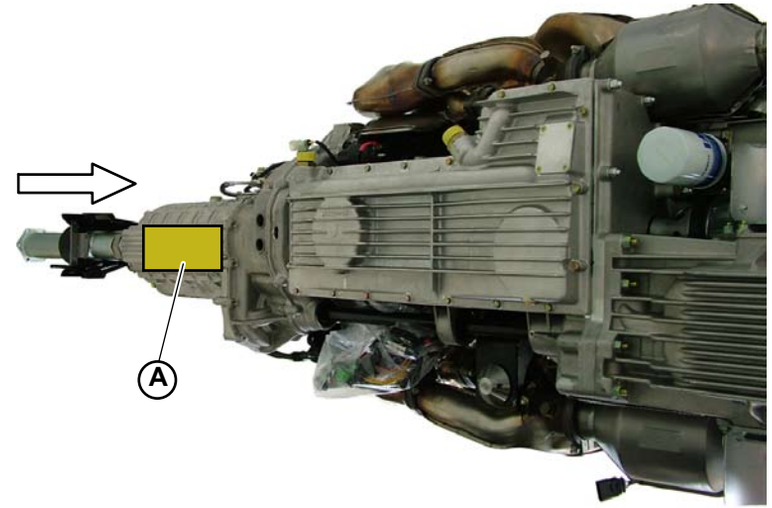

Fig.1

35. Remove the silencer mounting devices **(025103)**.

® Automobili Lamborghini S.p.A.
The information and procedures published below are strictly confidential and exclusively for the Lamborghini Dealer Network and Authorized Service Points. All copyrights are property of Automobili Lamborghini S.p.A based on copyright law. All of the PDF chapters in the WEB workshop manuals described below are based on information available at the time of publication. The company reserves the right to make updates and modifications. The following are prohibited: reprinting, reproduction, forwarding to unauthorized people and/or third parties, and translation, including partial, without written authorization from Automobili Lamborghini S.p.A.

36. Lower the car.
37. Remove the silencer loosening the lower mounting devices (not the bolts with bolts) **(025103)**.
38. Loose the rear stabilizer bar and move it backwards **(051103)**.
39. Remove the canister-head 1-6 pipe.
40. Disconnect the ground cables from the head 7-12.
41. Disconnect the (white) connector from the engine flywheel.
42. Disconnect the alternator cables **(090303).**
43. Disconnect the injection (side) and the ignition (front) cables.
44. Disconnect the catalyst temperature sensors and the thermocouple and oxygen sensor cables **(025303).**
45. Disconnect the knock sensor (4) wiring harness, the phase transformers (2) **(019003)** and the MAPS (2).
46. Remove the crossbar.
47. Remove the power steering pipes **(042303).**
48. Remove the two silencer hood brackets.
49. Remove the air conditioning system compressor pipes **(026003)**.
50. Lift the vehicle on the car lift 20 cm from the ground.
51. Fix the four engine extraction frame hooks to the engine side eyes and lift the whole engine-drive assembly very carefully directing it by hand to prevent it from knocking any vehicle part.
52. Arrange the engine-drive assembly on a proper support.

Fig.2

STOP

IF THERE IS AN E-GEAR, NEVER DISCONNECT THE OIL PIPES (LEAVE THE OIL PAN CONNECTED TO THE GEAR).
DISCONNECT ALL OF THE E-GEAR WIRES.

® Automobili Lamborghini S.p.A.
The information and procedures published below are strictly confidential and exclusively for the Lamborghini Dealer Network and Authorized Service Points. All copyrights are property of Automobili Lamborghini S.p.A based on copyright law. All of the PDF chapters in the WEB workshop manuals described below are based on information available at the time of publication. The company reserves the right to make updates and modifications. The following are prohibited: reprinting, reproduction, forwarding to unauthorized people and/or third parties, and translation, including partial, without written authorization from Automobili Lamborghini S.p.A.

Engine assembly

STOP This operation requires a car lift and a hoist with a rocking lever and 4 chains to sling the engine, to be fixed on the exhaust manifold hooks.

1. Lift the vehicle on the car lift 20 cm from the ground.
2. Fix the four engine extraction frame to the engine side eyes and lift the whole engine-drive assembly very carefully directing it by hand to prevent it from hurting any vehicle part.
3. After the engine-drive assembly has been inserted, let the vehicle down the car lift.
4. Connect the air conditioning system compressor pipes **(026005)**.
5. Insert the two silencer hood brackets.
6. Insert the power steering pipes **(042305).**
7. Connect the lower water pipe between the engine and radiator.
8. Fix the crossbar.
9. Connect the knock sensor (4) wiring harness, the phase transformers (2) **(019005)** and the MAPS (2).
10. Connect the catalyst temperature sensors **(025405)** and the thermocouple and oxygen sensor cables **(025305).**
11. Connect the injection (side) and the ignition (front) cables.
12. Connect the alternator cables **(090305).**
13. Connect the (white) connector to the engine flywheel.
14. Connect the ground cables from the head 7-12.
15. Insert the canister-head 1-6 pipe.
16. Fix the rear stabilizer bar and move it forwards **(051105)**.
17. Assemble the silencer tightening the rear mounting devices (not the bolts with springs) **(025105)**.
18. Lift the vehicle on the car lift.
19. Reattach the silencer mounting devices **(025105)**.

Fig.1

® Automobili Lamborghini S.p.A.
The information and procedures published below are strictly confidential and exclusively for the Lamborghini Dealer Network and Authorized Service Points. All copyrights are property of Automobili Lamborghini S.p.A based on copyright law. All of the PDF chapters in the WEB workshop manuals described below are based on information available at the time of publication. The company reserves the right to make updates and modifications. The following are prohibited: reprinting, reproduction, forwarding to unauthorized people and/or third parties, and translation, including partial, without written authorization from Automobili Lamborghini S.p.A.

Under the vehicle

20. Support the gearbox by means of a specific lifting device by inserting a wooden piece (**A-Fig.2**) and lever by means of a crowbar to move the engine towards the rear part in order to disconnect the front differential from the drive pipe.
21. Move the axle shafts toward the rear differential.
22. Remove the end of the clutch oil pipe and reconnect it.
23. Connect the cable (positive) of the starter (091105).
24. Screw the two engine side 24-mm mounting bolts.
25. Secure the shaft to the front differential **(052105).**
26. Reposition the rear axle shaft screws (6 per side) and connect the rear axle shafts **(050105).**
27. Reposition the ground plaited cable on the left side of the engine.
28. Secure the front drive mounting bolts **(030105).**
29. Connect the silencer mounting devices **(025105).**
30. Assemble the lower front drive cross member elements **(052105).**
31. From inside the vehicle assemble the panel and the gearshift on the tunnel **(086805).**
32. Tighten the clamps while protecting the exhaust terminals **(025105).**
33. Connect the inlet and outlet pipe from the oil pan **(011705).**
34. Fill the oil pan completely (about 2 liters) **(011708).**
35. Fill engine oil tank (about 9 liters) **(011708).**

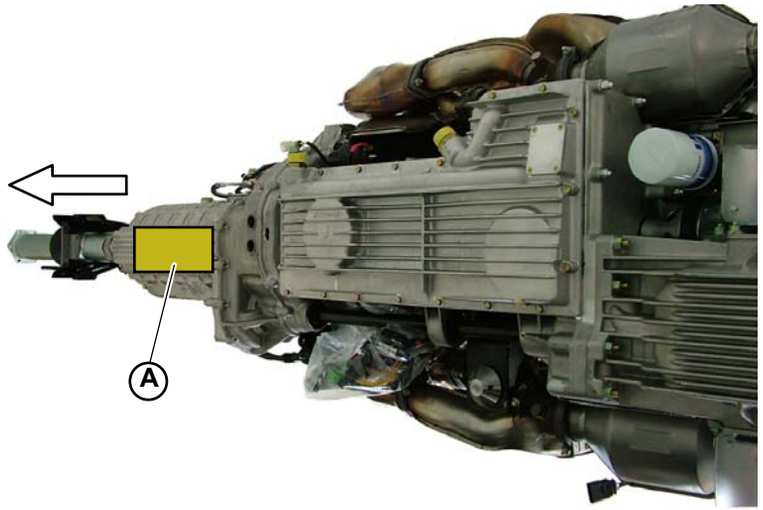

Fig.2

® Automobili Lamborghini S.p.A.
The information and procedures published below are strictly confidential and exclusively for the Lamborghini Dealer Network and Authorized Service Points. All copyrights are property of Automobili Lamborghini S.p.A based on copyright law. All of the PDF chapters in the WEB workshop manuals described below are based on information available at the time of publication. The company reserves the right to make updates and modifications. The following are prohibited: reprinting, reproduction, forwarding to unauthorized people and/or third parties, and translation, including partial, without written authorization from Automobili Lamborghini S.p.A.

36. Lower the car.
37. Connect the breather pipe from the water runnel.
38. Connect the upper water pipe between the engine and radiator.
39. Connect the driver side canister pipes.
40. Connect the passenger side VIS/VES solenoid valve pipes.
41. Position the brake booster and NCS vacuum pipes (if present).
42. Secure the driver side ignition connector.
43. Secure the oil breather pipes from the engine oil tank.
44. Secure the fuel pipes to the injection rails and the return pipes to the tank **(012805).**
45. Reposition the driver side intake box **(013305).**
46. Secure the upper panel.
47. Connect the vacuum pipes to the left and right heads.
48. Secure the engine compartment central panel **(081305).**
49. Position the silencer heat-proof covering **(025105).**
50. Assemble the engine hood lock **(082705)** and reattach the connectors.
51. Secure the rear finish grid taking care of the license plate lights **(081305 - 094305).**
52. Assemble upper part of both air filter intake boxes and connect the air intake pipes mounting clamps **(013305)** to the DBW.
53. Assemble the side panels and the silencer safety grid **(025105).**
54. Assemble the engine hood shock absorber lower mounts and reposition the engine hood **(082705).**

STOP

IF THERE IS AN E-GEAR, NEVER DISCONNECT THE OIL PIPES (LEAVE THE OIL PAN CONNECTED TO THE GEAR).
RECONNECT ALL OF THE E-GEAR WIRES.

® Automobili Lamborghini S.p.A.
The information and procedures published below are strictly confidential and exclusively for the Lamborghini Dealer Network and Authorized Service Points. All copyrights are property of Automobili Lamborghini S.p.A based on copyright law. All of the PDF chapters in the WEB workshop manuals described below are based on information available at the time of publication. The company reserves the right to make updates and modifications. The following are prohibited: reprinting, reproduction, forwarding to unauthorized people and/or third parties, and translation, including partial, without written authorization from Automobili Lamborghini S.p.A.

Engine overhaul

- Fasten the crankcase on a turning support so that easy access to the different engine parts is guaranteed.
- Always tighten in compliance with the indicated tightening torque values and the given instructions.
- Before tightening screws and nuts, make sure that the threads and the seats are clean and covered with a thin film of engine oil.
- Remove.
- Clean thoroughly the crankcase and all the removed parts.

® Automobili Lamborghini S.p.A.
The information and procedures published below are strictly confidential and exclusively for the Lamborghini Dealer Network and Authorized Service Points. All copyrights are property of Automobili Lamborghini S.p.A based on copyright law. All of the PDF chapters in the WEB workshop manuals described below are based on information available at the time of publication. The company reserves the right to make updates and modifications. The following are prohibited: reprinting, reproduction, forwarding to unauthorized people and/or third parties, and translation, including partial, without written authorization from Automobili Lamborghini S.p.A.

Auxiliary belt

4-race type auxiliary belt.
The path is shown in the figure (**Fig.1**).
The belt tension is ensured by means of a self-adjusting mechanic-type tightener.

A. Water pump pulley
B. Air conditioning system pulley
C. Alternator pulley
D. Automatic belt tightener
E. Engine pulley

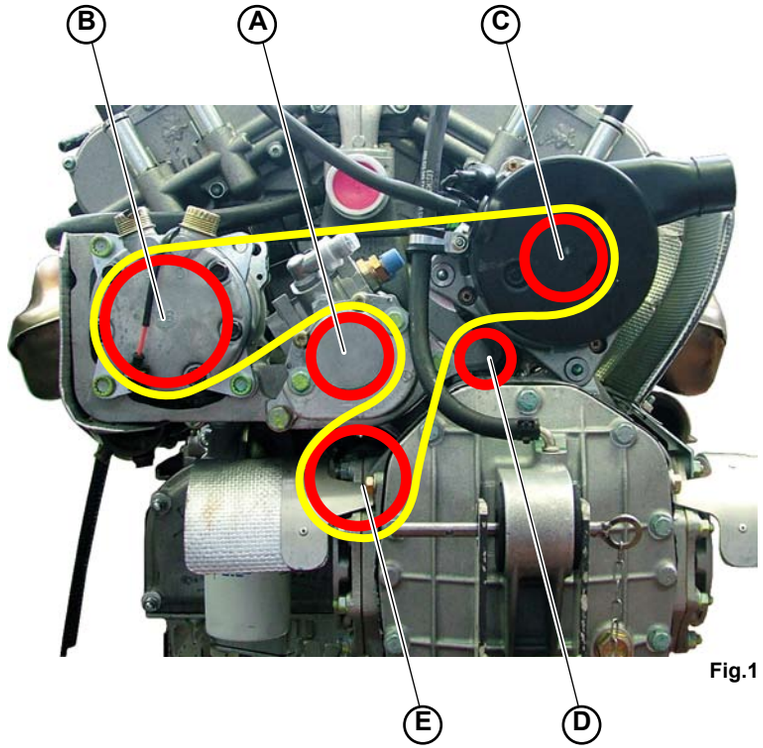

Fig.1

® Automobili Lamborghini S.p.A.
The information and procedures published below are strictly confidential and exclusively for the Lamborghini Dealer Network and Authorized Service Points. All copyrights are property of Automobili Lamborghini S.p.A based on copyright law. All of the PDF chapters in the WEB workshop manuals described below are based on information available at the time of publication. The company reserves the right to make updates and modifications. The following are prohibited: reprinting, reproduction, forwarding to unauthorized people and/or third parties, and translation, including partial, without written authorization from Automobili Lamborghini S.p.A.

Auxiliary belt disassembly

NOTE
The auxiliary belt disassembly/assembly is possible when the power train is on board; in that case, protect the parts under the pump by means of a cloth.

Preliminary operations

- Disassemble the silencer safety grid **(025103)**.

Pump disassembly

1. Remove the delivery (**A-Fig.1**) and intake pipe mounting clamps on the water pump and remove the pipes (**B-Fig.1**).

NOTE
Position a container under the vehicle to collect the coolant.

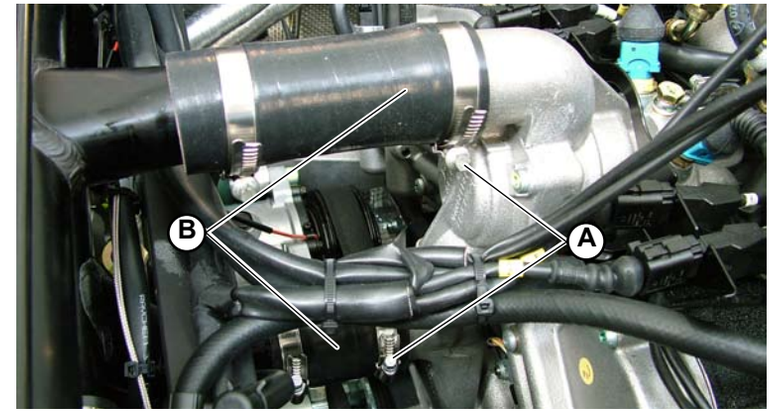

Fig.1

2. Remove the rear cross member, unscrewing the 4 screws (**C-Fig.2**) of the two inner sides.

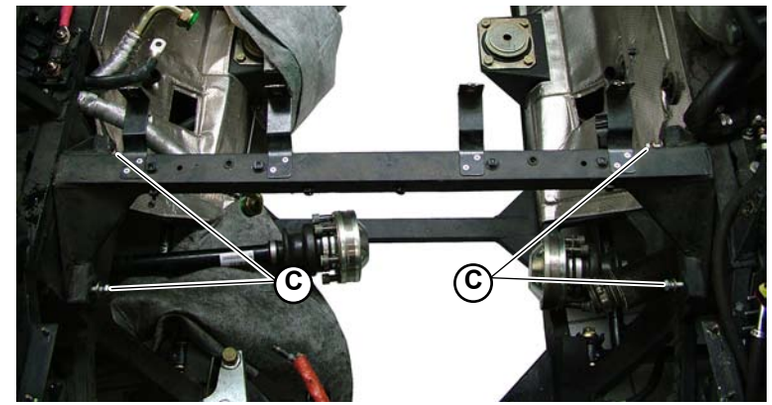

Fig.2

® Automobili Lamborghini S.p.A.
The information and procedures published below are strictly confidential and exclusively for the Lamborghini Dealer Network and Authorized Service Points. All copyrights are property of Automobili Lamborghini S.p.A based on copyright law. All of the PDF chapters in the WEB workshop manuals described below are based on information available at the time of publication. The company reserves the right to make updates and modifications. The following are prohibited: reprinting, reproduction, forwarding to unauthorized people and/or third parties, and translation, including partial, without written authorization from Automobili Lamborghini S.p.A.

3. Unscrew the 2 bolts (**D-Fig.3**) and the screw (**E-Fig.3**) and remove the heat-proof panel (**F-Fig.3**).

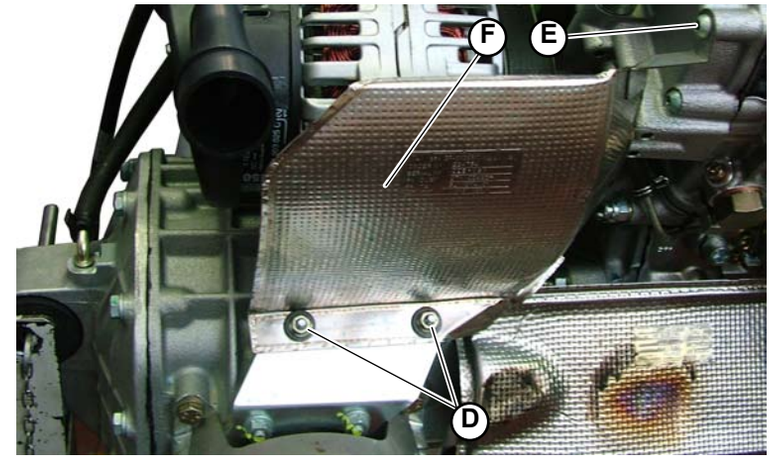

Fig.3

4. Unscrew the bolt that secures the alternator (**G-Fig.4**).

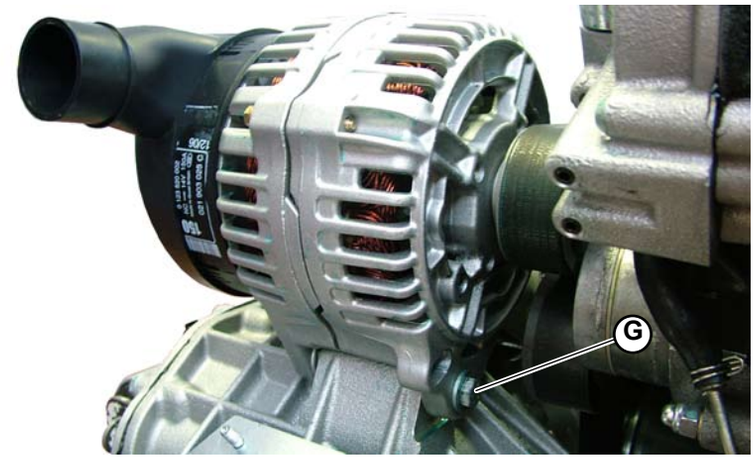

Fig.4

® Automobili Lamborghini S.p.A.
The information and procedures published below are strictly confidential and exclusively for the Lamborghini Dealer Network and Authorized Service Points. All copyrights are property of Automobili Lamborghini S.p.A based on copyright law. All of the PDF chapters in the WEB workshop manuals described below are based on information available at the time of publication. The company reserves the right to make updates and modifications. The following are prohibited: reprinting, reproduction, forwarding to unauthorized people and/or third parties, and translation, including partial, without written authorization from Automobili Lamborghini S.p.A.

5. Remove the belt tensioner (**E-Fig.5**) by means of a 15 mm wrench.

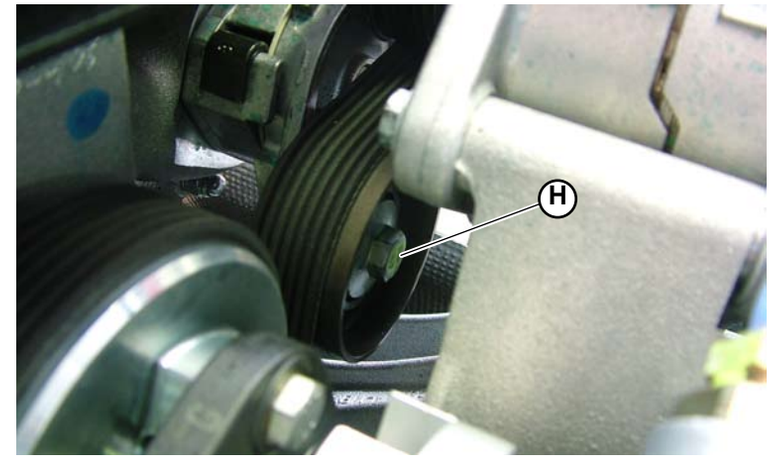

Fig.5

6. Push on the belt tensioner (**H-Fig.5/6**), push the alternator towards the center of the engine and make the belt (**I-Fig.6**) slide outside the alternator pulley; then push the alternator (**L-Fig.6**) towards the outside.

7. Make the belt slide outside the air conditioning system (**M-Fig.6**), the water pump and the engine (**N-Fig.6**) pulleys and then remove the belt.

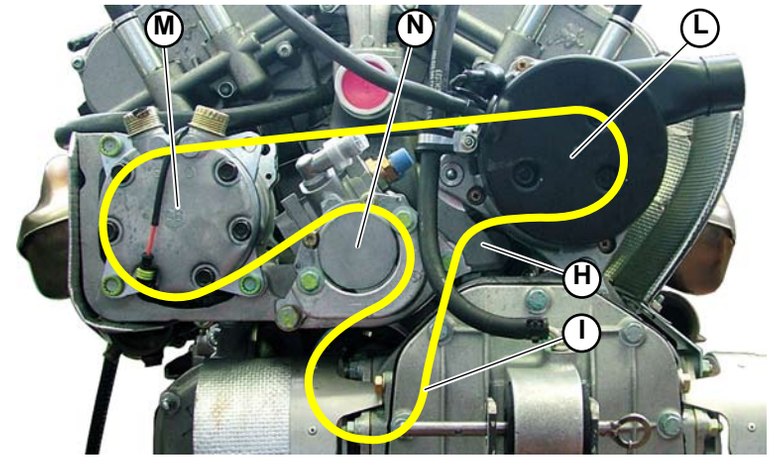

Fig.6

® Automobili Lamborghini S.p.A.
The information and procedures published below are strictly confidential and exclusively for the Lamborghini Dealer Network and Authorized Service Points. All copyrights are property of Automobili Lamborghini S.p.A based on copyright law. All of the PDF chapters in the WEB workshop manuals described below are based on information available at the time of publication. The company reserves the right to make updates and modifications. The following are prohibited: reprinting, reproduction, forwarding to unauthorized people and/or third parties, and translation, including partial, without written authorization from Automobili Lamborghini S.p.A.

Auxiliary belt assembly

1. Make the auxiliary belt (**A-Fig.1**) slide on the air conditioning system (**B-Fig.1**), water pump (**C-Fig.1**) and engine pulleys.

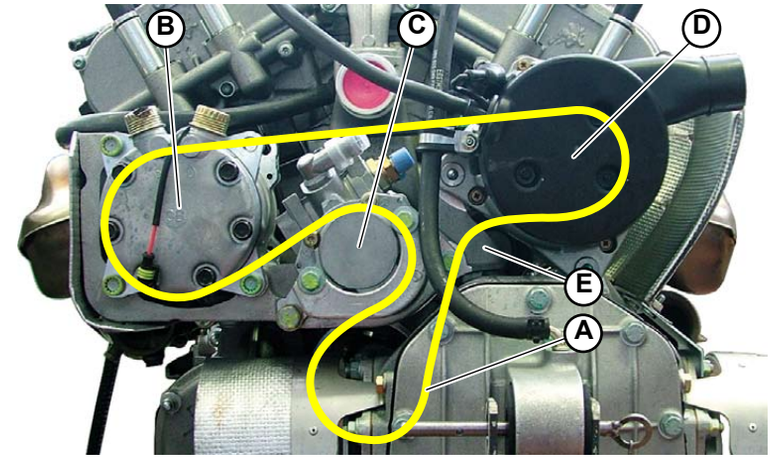

Fig.1

2. Move the alternator (**D-Fig.1**) towards the center of the engine and make the belt slide on the alternator pulley by pressing the belt tensioner (**E-Fig.1/2**).

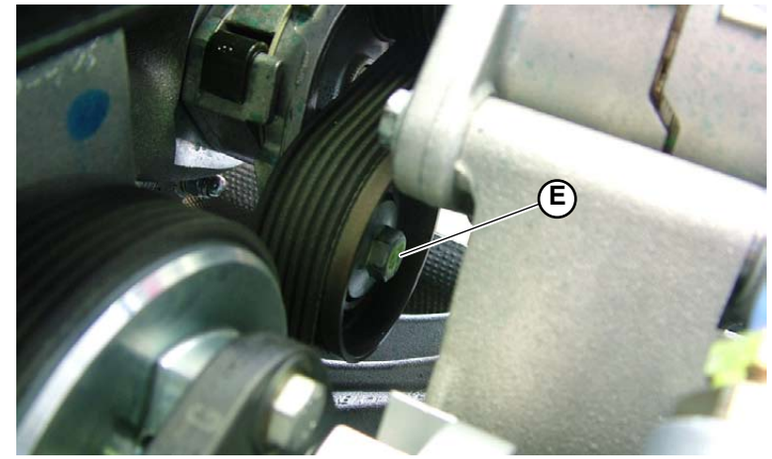

Fig.2

® Automobili Lamborghini S.p.A.
The information and procedures published below are strictly confidential and exclusively for the Lamborghini Dealer Network and Authorized Service Points. All copyrights are property of Automobili Lamborghini S.p.A based on copyright law. All of the PDF chapters in the WEB workshop manuals described below are based on information available at the time of publication. The company reserves the right to make updates and modifications. The following are prohibited: reprinting, reproduction, forwarding to unauthorized people and/or third parties, and translation, including partial, without written authorization from Automobili Lamborghini S.p.A.

3. Check for the belt correct positioning in the pulley races.

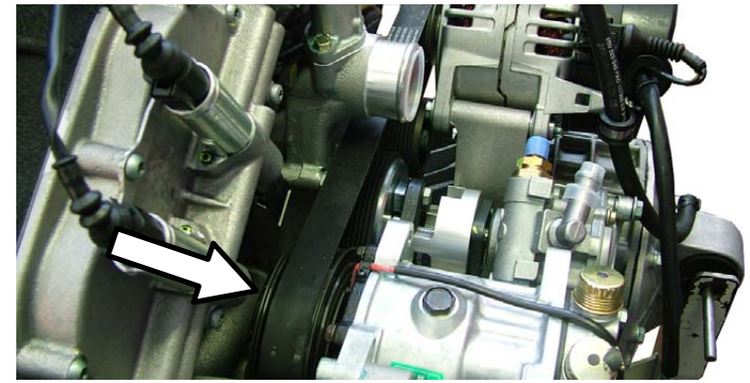

Fig.3

STOP **Unlike the other pulleys, the A/C compressor pulley has 5 races while the belt has 4 races; THE ENGINE SIDE RACE IS TO BE LEFT FREE (Fig.3).**

4. Lock the belt tensioner.

5. Tighten the bolt that secures the alternator (**F-Fig.4**).

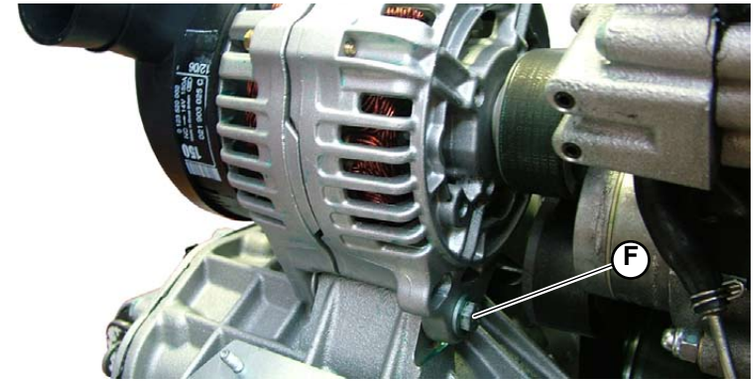

Fig.4

6. Secure the heat-proof panel (**G-Fig.5**) tightening the 2 bolts (**H-Fig.5**) and the screw (**I-Fig.5**).

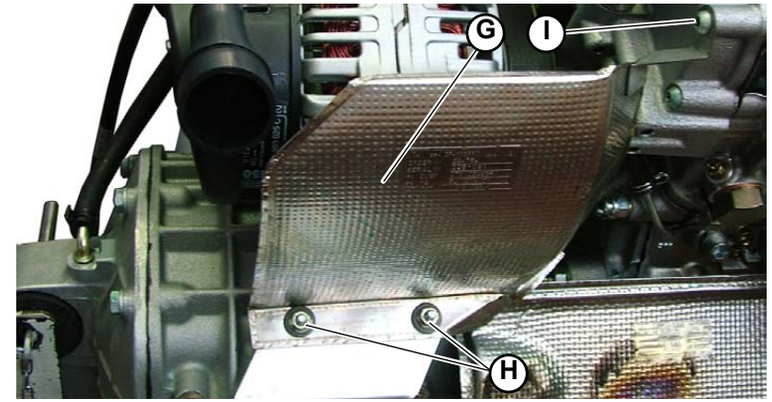

Fig.5

® Automobili Lamborghini S.p.A.
The information and procedures published below are strictly confidential and exclusively for the Lamborghini Dealer Network and Authorized Service Points. All copyrights are property of Automobili Lamborghini S.p.A based on copyright law. All of the PDF chapters in the WEB workshop manuals described below are based on information available at the time of publication. The company reserves the right to make updates and modifications. The following are prohibited: reprinting, reproduction, forwarding to unauthorized people and/or third parties, and translation, including partial, without written authorization from Automobili Lamborghini S.p.A.

7. Assemble the rear cross member, tightening the 4 screws (**L-Fig.6**) onto the two inner sides.

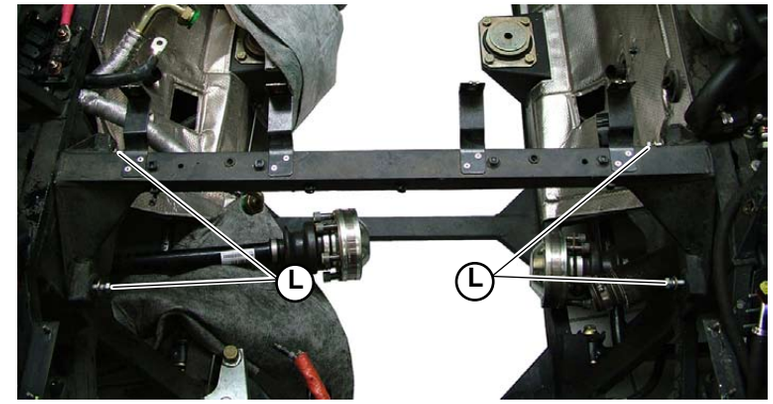

Fig.6

8. Reconnect the water pump delivery and intake pipes (**M-Fig.7**), securing them with the clamps (**N-Fig.7**).

NOTE
Top up the engine coolant **(022107)**.

- Assemble the silencer safety grid **(025105)**.

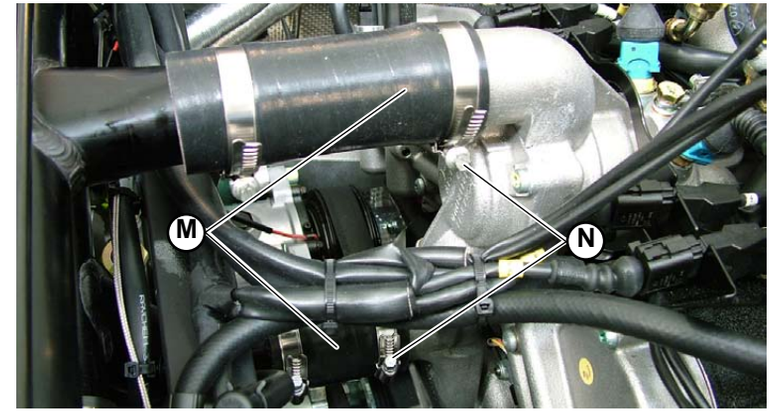

Fig.7

® Automobili Lamborghini S.p.A.
The information and procedures published below are strictly confidential and exclusively for the Lamborghini Dealer Network and Authorized Service Points. All copyrights are property of Automobili Lamborghini S.p.A based on copyright law. All of the PDF chapters in the WEB workshop manuals described below are based on information available at the time of publication. The company reserves the right to make updates and modifications. The following are prohibited: reprinting, reproduction, forwarding to unauthorized people and/or third parties, and translation, including partial, without written authorization from Automobili Lamborghini S.p.A.

Main journal seat diameter	**d**	66,675 ÷ 66,688
Seat diameter	**D**	92,000 ÷ 92,035

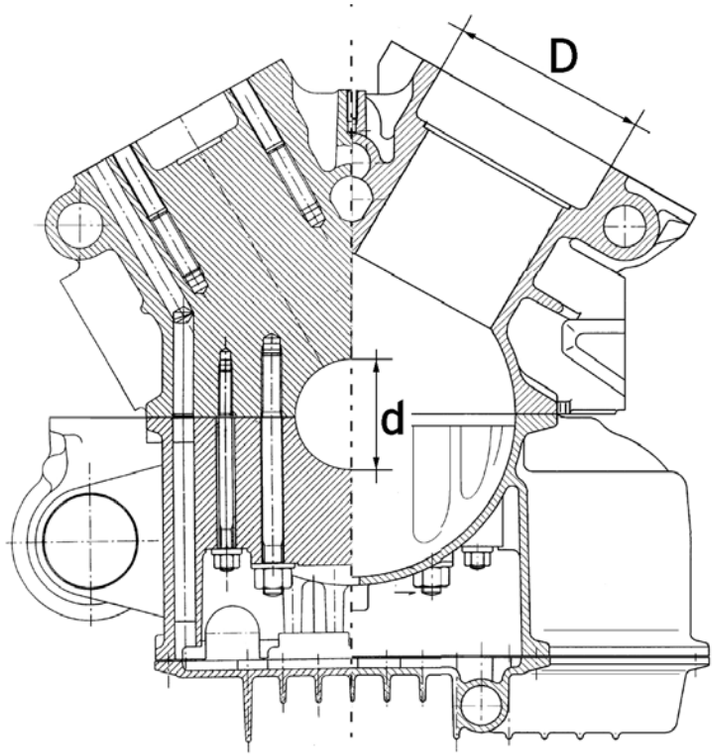

Fig.1

® Automobili Lamborghini S.p.A.
The information and procedures published below are strictly confidential and exclusively for the Lamborghini Dealer Network and Authorized Service Points. All copyrights are property of Automobili Lamborghini S.p.A based on copyright law. All of the PDF chapters in the WEB workshop manuals described below are based on information available at the time of publication. The company reserves the right to make updates and modifications. The following are prohibited: reprinting, reproduction, forwarding to unauthorized people and/or third parties, and translation, including partial, without written authorization from Automobili Lamborghini S.p.A.

The present section contains the following disassembly sequences:

A. Head cover and head cover gaske disassembly
B. Head and head gaske disassembly

A. Head cover and head cover gaske disassembly

Prerequisites

- Intake system removed **(012903)**.

Disassembly

1. Remove the ignition coil (**A-Fig.1**).

Fig.1

NOTE
During the coil removal, take care not to damage them; always check after removal that the coil has its inner spark plug side contact clip and that the protection aluminium sheet is correctly positioned on the mark.
In order to prevent any dirt from entering into the cylinders, the spark plugs MUST NOT BE REMOVED.

2. Remove the phase transformer cover **(011603)**.

3. Unscrew the 17 head cover screws (**B-Fig.2**) and remove the cover (**C-Fig.2**).

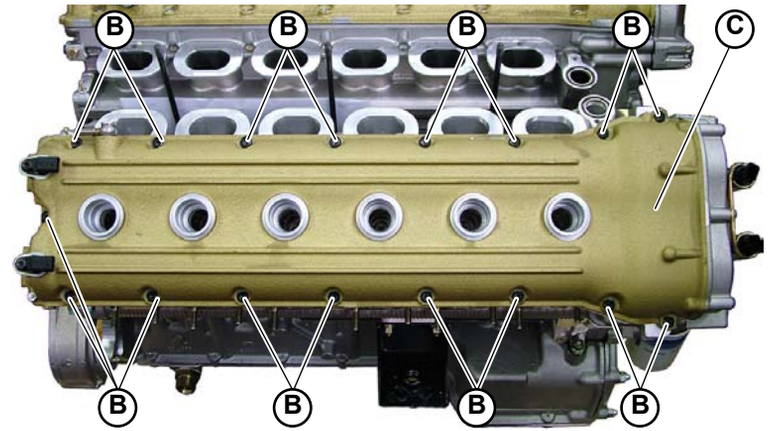

Fig.2

4. Remove the head cover gasket (**D-Fig.3**).

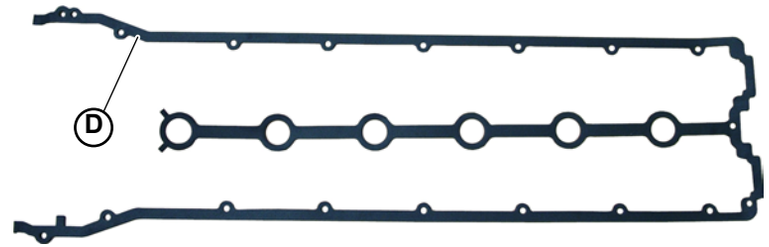

Fig.3

® Automobili Lamborghini S.p.A.
The information and procedures published below are strictly confidential and exclusively for the Lamborghini Dealer Network and Authorized Service Points. All copyrights are property of Automobili Lamborghini S.p.A based on copyright law. All of the PDF chapters in the WEB workshop manuals described below are based on information available at the time of publication. The company reserves the right to make updates and modifications. The following are prohibited: reprinting, reproduction, forwarding to unauthorized people and/or third parties, and translation, including partial, without written authorization from Automobili Lamborghini S.p.A.

B. Head and head gaske disassembly

NOTE
The head disassembly is possible only when the power train is removed.

Prerequisites
- Intake system removed **(012903)**.
- Head cover removed **(Point A)**.
- Power steering pump and air conditioning system compressor frame (cylinder bank 7-12) removed.
- Alternator (cylinder bank 1-6) removed **(090303)**.

Disassembly

1. Remove the head outlet water pipe flanges (**A-Fig.4**).

2. Remove the head outlet water container with the thermostatic valve body (**B-Fig.5**).

3. Remove the exhaust manifold **(025103)**.

4. Loosen the mounting screws **(C-Fig.6)** of the variable valve timing mechanisms, holding the camshafts in place with a 26 mm wrench.

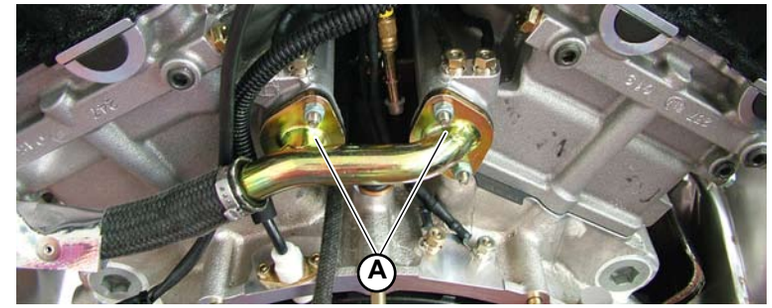

Fig.4

Fig.5

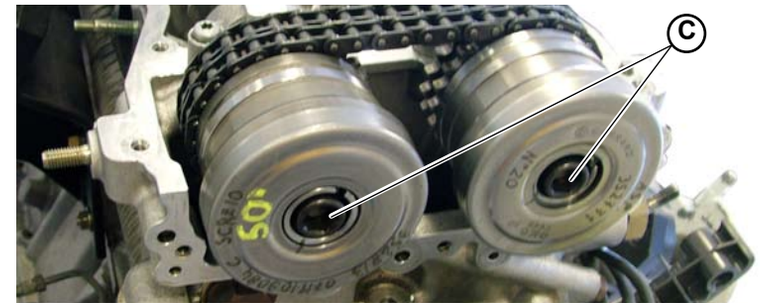

Fig.6

® Automobili Lamborghini S.p.A.
The information and procedures published below are strictly confidential and exclusively for the Lamborghini Dealer Network and Authorized Service Points. All copyrights are property of Automobili Lamborghini S.p.A based on copyright law. All of the PDF chapters in the WEB workshop manuals described below are based on information available at the time of publication. The company reserves the right to make updates and modifications. The following are prohibited: reprinting, reproduction, forwarding to unauthorized people and/or third parties, and translation, including partial, without written authorization from Automobili Lamborghini S.p.A.

5. Remove the upper timing chain hydraulic tightener (**D-Fig.7**).

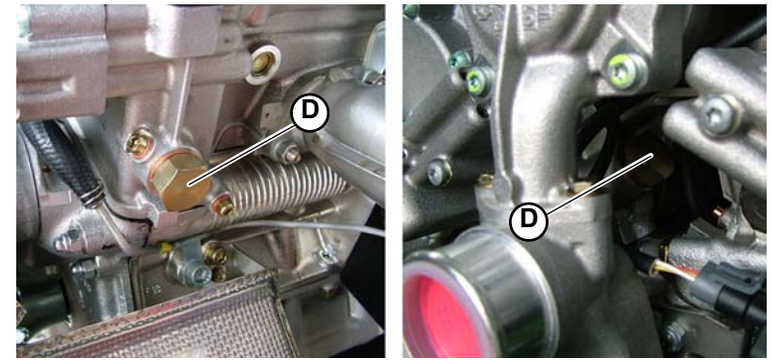

Fig.7

6. Remove the plug (**E-Fig.8**) and the locking screw (**F-Fig.8**) under the upper chain tightener shoe.

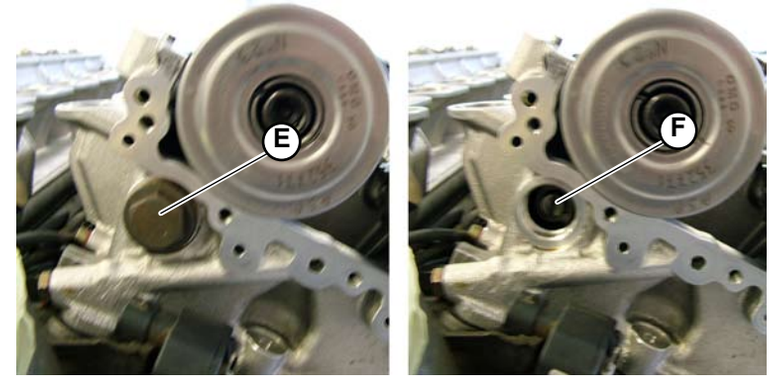

Fig.8

7. Unscrew the camshaft phase transformers (**G-Fig.9**); the backward movement of the two phase transformers must be the same, in order not to damage the upper timing chain.

8. Remove the two phase transformers and fix the upper timing chain properly (**H-Fig.9**).

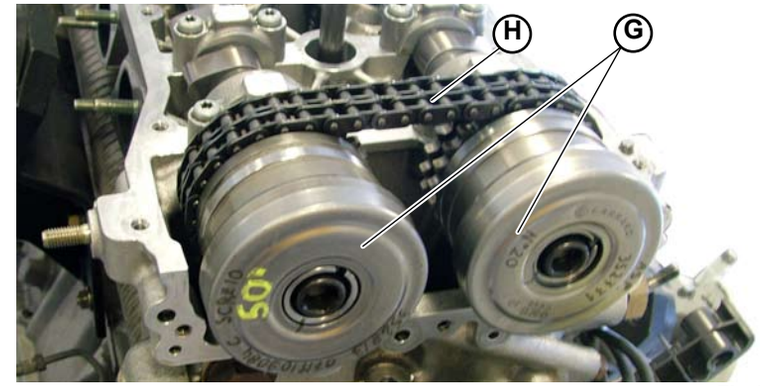

Fig.9

® Automobili Lamborghini S.p.A.
The information and procedures published below are strictly confidential and exclusively for the Lamborghini Dealer Network and Authorized Service Points. All copyrights are property of Automobili Lamborghini S.p.A based on copyright law. All of the PDF chapters in the WEB workshop manuals described below are based on information available at the time of publication. The company reserves the right to make updates and modifications. The following are prohibited: reprinting, reproduction, forwarding to unauthorized people and/or third parties, and translation, including partial, without written authorization from Automobili Lamborghini S.p.A.

9. Unscrew the bolt (**I-Fig.10**).

10. Unscrew the mounting nuts and remove the head (**Fig.10**).

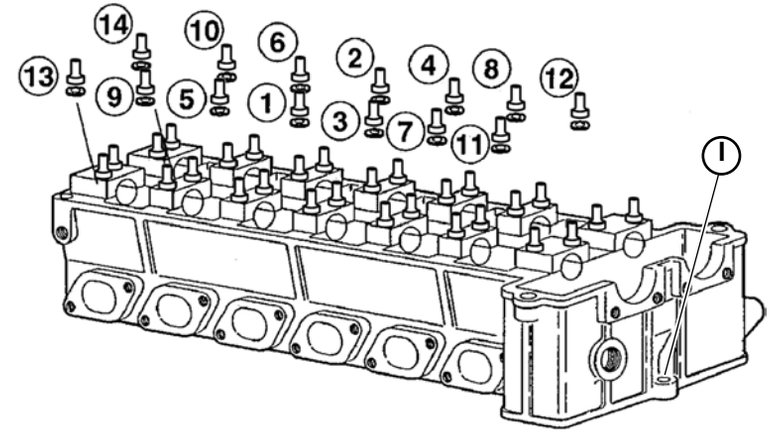

Fig.10

11. Remove the head gasket (**L-Fig.11**).

12. Remove the head oil passage O-ring (**M-Fig.11**).

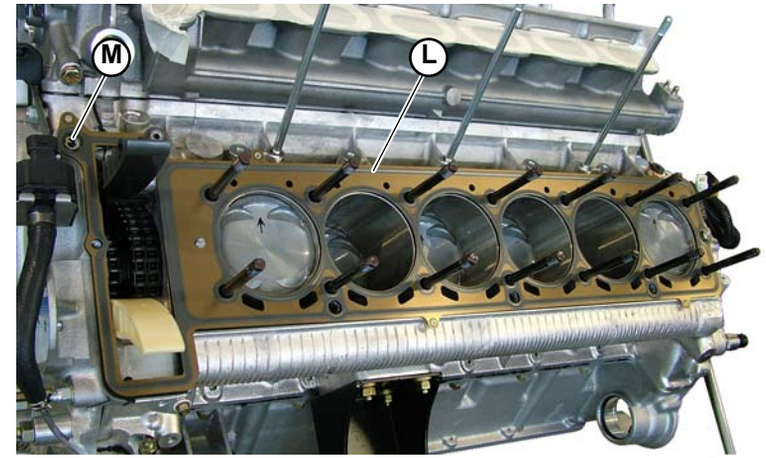

Fig.11

® Automobili Lamborghini S.p.A.
The information and procedures published below are strictly confidential and exclusively for the Lamborghini Dealer Network and Authorized Service Points. All copyrights are property of Automobili Lamborghini S.p.A based on copyright law. All of the PDF chapters in the WEB workshop manuals described below are based on information available at the time of publication. The company reserves the right to make updates and modifications. The following are prohibited: reprinting, reproduction, forwarding to unauthorized people and/or third parties, and translation, including partial, without written authorization from Automobili Lamborghini S.p.A.

The present section contains the following assembly sequences:

A. Head cover and head cover gaske assembly

B. Head and head gaske assembly

A. Head cover and head cover gaske assembly

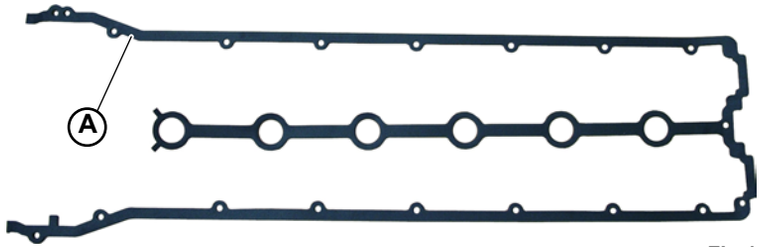

Fig.1

1. Position the head cover gasket (**A-Fig.1**).

2. Position the head cover (**B-Fig.2**) and tighten the 17 screws (**C-Fig.2**) as necessary.

3. Assemble the phase transformer cover **(019005)**.

4. Assemble the ignition coil (**D-Fig.4**).

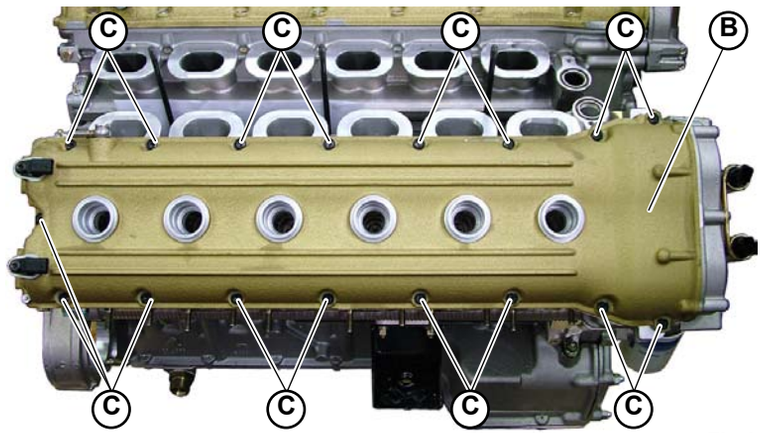

Fig.2

NOTE
During the coil removal, take care not to damage them; always check that the coil has its inner spark plug side contact clip and that the protection aluminium sheet is correctly positioned on the mark.
In order to prevent any dirt from entering into the cylinders, the spark plugs MUST NOT BE REMOVED.

- Assemble the intake system **(012905)**.

Fig.3

® Automobili Lamborghini S.p.A.
The information and procedures published below are strictly confidential and exclusively for the Lamborghini Dealer Network and Authorized Service Points. All copyrights are property of Automobili Lamborghini S.p.A based on copyright law. All of the PDF chapters in the WEB workshop manuals described below are based on information available at the time of publication. The company reserves the right to make updates and modifications. The following are prohibited: reprinting, reproduction, forwarding to unauthorized people and/or third parties, and translation, including partial, without written authorization from Automobili Lamborghini S.p.A.

B. Head and head gaske assembly

1. Position the new head gasket (**A-Fig.4**) taking care to carry out the step in an absolutely clean area (clean and degreased surfaces).

2. Install a new head oil flow O-ring (**B-Fig.4**).

3. Position the head taking care of recovering the upper timing chain.

4. Tighten the bolt (**C-Fig.5**).

5. Tighten the head nuts to the prescribed torque by means of Molycote 1000 and following the tightening sequence shown in the figure (**Fig.5**).
   Head nuts; Tightening Torque (000800-6b).

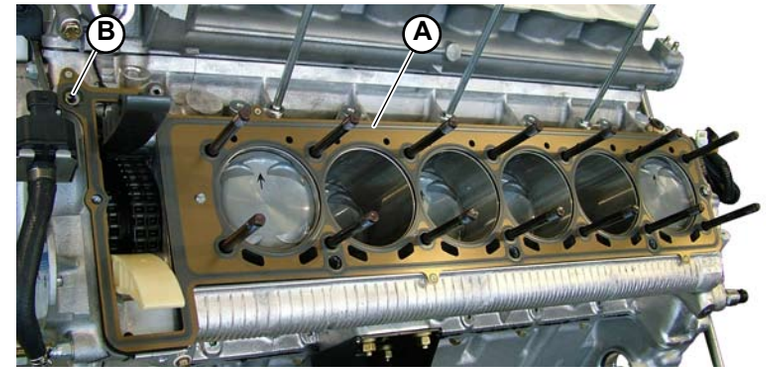

Fig.4

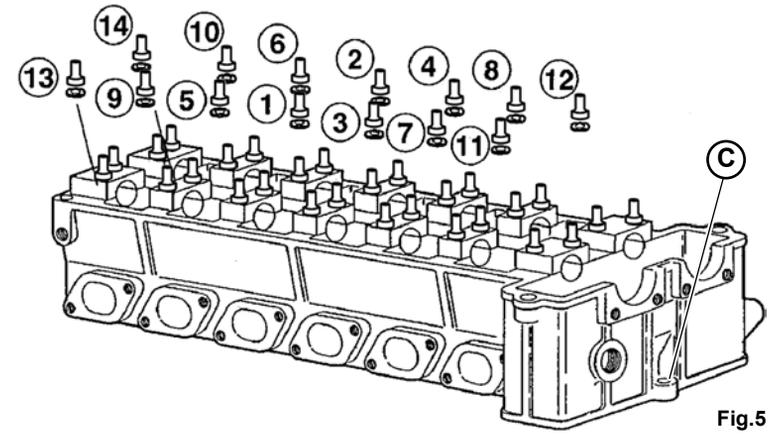

Fig.5

NOTE
Tighten the nuts using the special tool **(000200)** (**Fig.6**).

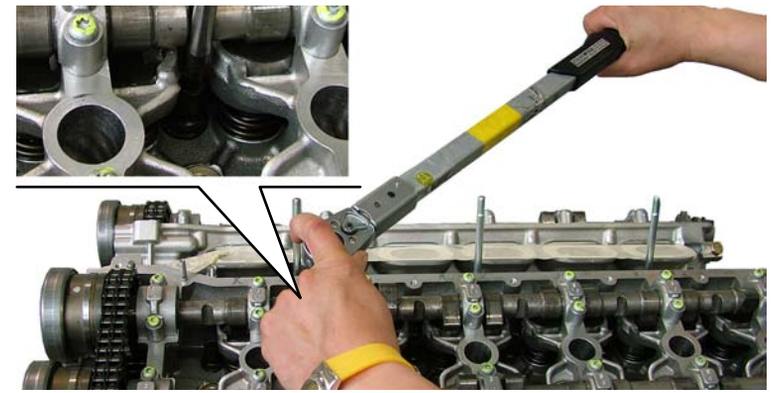

Fig.6

® Automobili Lamborghini S.p.A.
The information and procedures published below are strictly confidential and exclusively for the Lamborghini Dealer Network and Authorized Service Points. All copyrights are property of Automobili Lamborghini S.p.A based on copyright law. All of the PDF chapters in the WEB workshop manuals described below are based on information available at the time of publication. The company reserves the right to make updates and modifications. The following are prohibited: reprinting, reproduction, forwarding to unauthorized people and/or third parties, and translation, including partial, without written authorization from Automobili Lamborghini S.p.A.

6. Install the two phase transformers (**D-Fig.7**) with the chain (**E-Fig.7**) fitted on the camshafts.

7. Screw the two variable valve timing mechanisms onto relative camshafts without tightening them completely.

8. Move the side shoe, lock it by means of the screw (**F-Fig.8**) and then fit the plug (**G-Fig.8**).

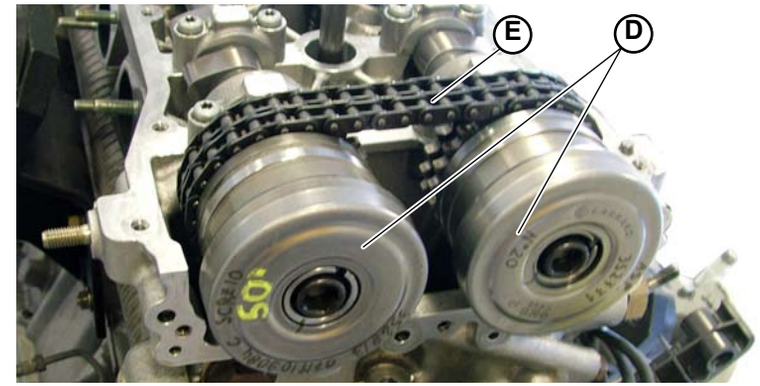

Fig.7

9. Install the hydraulic tightener with its washer (**H-Fig.9**).

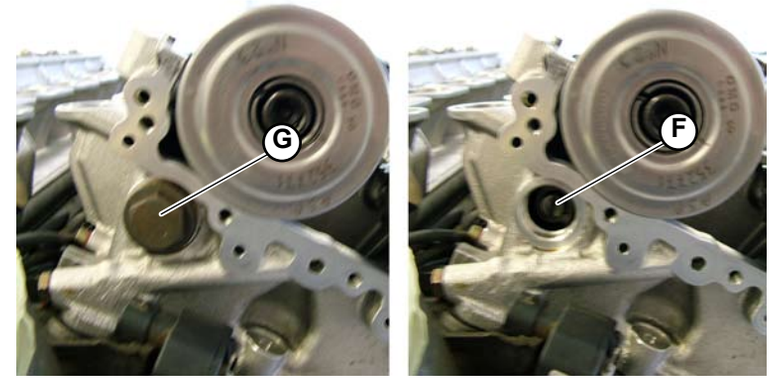

Fig.8

10. Proceed with the timing setting **(010902)**.

11. Tighten the two variable valve timing mechanisms (**D-Fig.7**) completely and check the timing again **(010902)**.
Screw attachment; **Tightening Torque (000800-20b).**

12. Install the new O-rings and the head outlet water container with the thermostatic valve body (**I-Fig.10**).

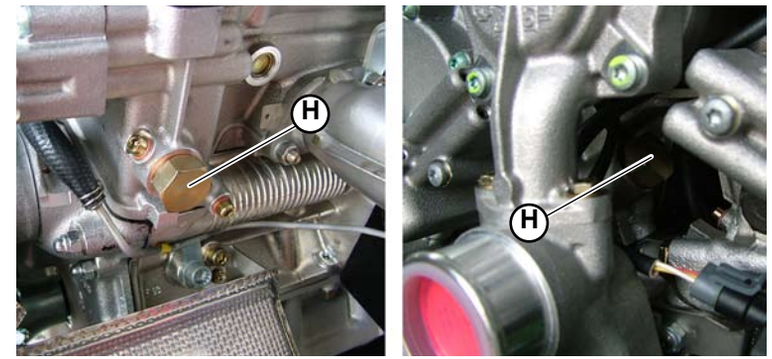

Fig.9

® Automobili Lamborghini S.p.A.
The information and procedures published below are strictly confidential and exclusively for the Lamborghini Dealer Network and Authorized Service Points. All copyrights are property of Automobili Lamborghini S.p.A based on copyright law. All of the PDF chapters in the WEB workshop manuals described below are based on information available at the time of publication. The company reserves the right to make updates and modifications. The following are prohibited: reprinting, reproduction, forwarding to unauthorized people and/or third parties, and translation, including partial, without written authorization from Automobili Lamborghini S.p.A.

13. Reinstall the exhaust manifold **(025105)**.

14. Assemble the head outlet water pipe flanges (**L-Fig.11**).

Fig.10

15. Degrease and clean the cover and the head seats.

16. Verify the centering pin correct position.

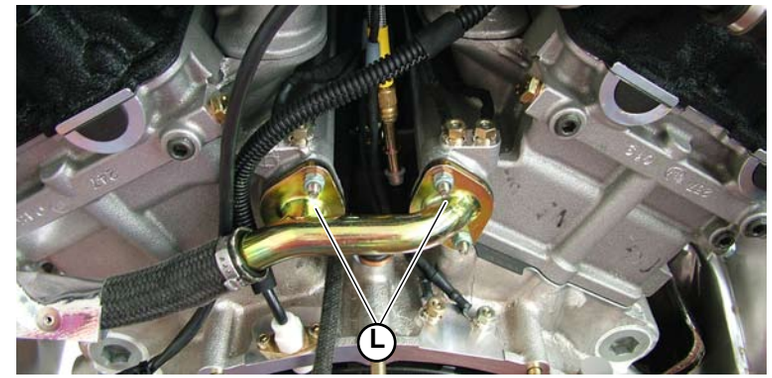

Fig.11

- Assemble the alternator (cylinder bank 1-6) **(090305)**.
- Assemble the power steering pump and air conditioning system compressor frame (cylinder bank 7-12).
- Assemble the head cover **(Point A)**.
- Assemble the phase transformer cover **(011605)**.
- Assemble the intake system **(012905)**.

® Automobili Lamborghini S.p.A.
The information and procedures published below are strictly confidential and exclusively for the Lamborghini Dealer Network and Authorized Service Points. All copyrights are property of Automobili Lamborghini S.p.A based on copyright law. All of the PDF chapters in the WEB workshop manuals described below are based on information available at the time of publication. The company reserves the right to make updates and modifications. The following are prohibited: reprinting, reproduction, forwarding to unauthorized people and/or third parties, and translation, including partial, without written authorization from Automobili Lamborghini S.p.A.

Head overhaul

Before carrying out this procedure, disassemble the engine head and then continue on a work bench.

Preliminary operations

- Extract the two camshafts (**A-Fig.1**) **(010903)**.
- Remove the tappets, the thickness and the valve unit from their housings **(010903)** and place them in the correct order on the workbench (**B-Fig.1**) so it is possible to re-establish their original positions when they are reassembled.

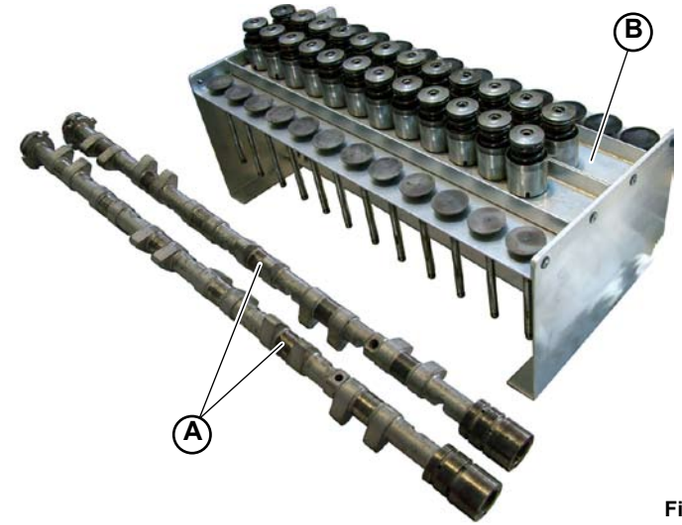

Fig.1

- Remove the plugs (**C-Fig.2**) so it is possible to access and clean all the ducts.

Fig.2

® Automobili Lamborghini S.p.A.
The information and procedures published below are strictly confidential and exclusively for the Lamborghini Dealer Network and Authorized Service Points. All copyrights are property of Automobili Lamborghini S.p.A based on copyright law. All of the PDF chapters in the WEB workshop manuals described below are based on information available at the time of publication. The company reserves the right to make updates and modifications. The following are prohibited: reprinting, reproduction, forwarding to unauthorized people and/or third parties, and translation, including partial, without written authorization from Automobili Lamborghini S.p.A.

Cleaning

1. Rub all the head support surfaces with a scouring pad (**A-Fig.3**).

2. Clean the exhausts (**B-Fig.3**) using the scraper tool.
   To clean, access from the external part of the exhausts as indicated by the arrow.

3. Rub the cap with a scouring pad (**C-Fig.4**) and clean using a grease remover.
   Clean (including the valve housings) using a scouring pad and grease remover (**D-Fig.4**).

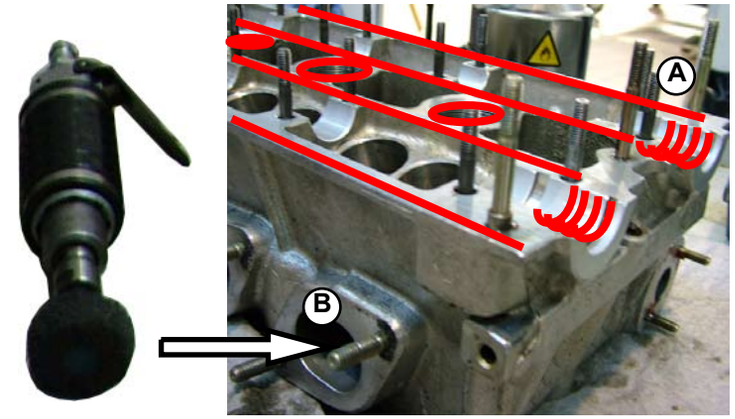

Fig.3

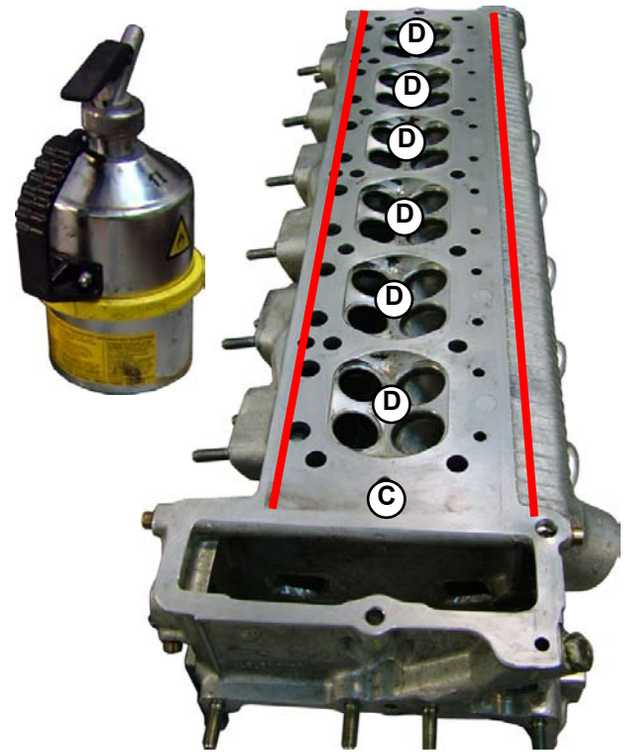

Fig.4

® Automobili Lamborghini S.p.A.
The information and procedures published below are strictly confidential and exclusively for the Lamborghini Dealer Network and Authorized Service Points. All copyrights are property of Automobili Lamborghini S.p.A based on copyright law. All of the PDF chapters in the WEB workshop manuals described below are based on information available at the time of publication. The company reserves the right to make updates and modifications. The following are prohibited: reprinting, reproduction, forwarding to unauthorized people and/or third parties, and translation, including partial, without written authorization from Automobili Lamborghini S.p.A.

4. Clean the valves (**E-Fig.5**):
- position the valve on a pillar drill. Before securing the valve to the drill, wrap tin foil around the drill-valve contact area on the valve.
- Start the pillar drill.
- While the valve is turning, clean with a scouring pad.
- Remove the valve from the drill and wash completely.

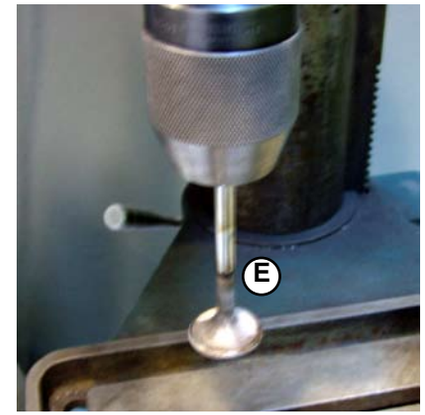

Fig.5

STOP **Take care not to spoil the valve stem.**

5. Clean the tappet, spring and shim pack (**F-Fig.6**) in the following order:
- Wash.
- Remove grease.
- Blow.

6. Polish the camshaft with fine grain paper to remove any stains.

7. To clean the oil holes (**G-Fig.6**) on the camshaft, blow and then use a wire to completely clear any blockages.

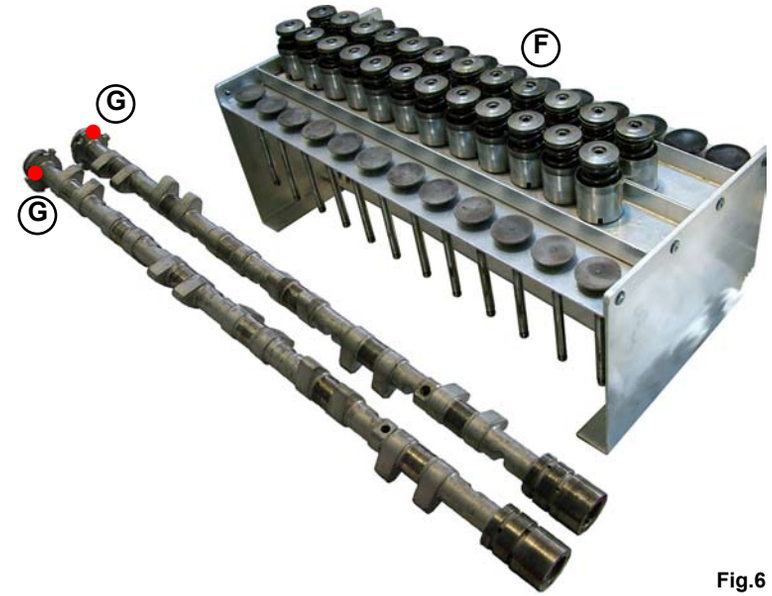

Fig.6

® Automobili Lamborghini S.p.A.
The information and procedures published below are strictly confidential and exclusively for the Lamborghini Dealer Network and Authorized Service Points. All copyrights are property of Automobili Lamborghini S.p.A based on copyright law. All of the PDF chapters in the WEB workshop manuals described below are based on information available at the time of publication. The company reserves the right to make updates and modifications. The following are prohibited: reprinting, reproduction, forwarding to unauthorized people and/or third parties, and translation, including partial, without written authorization from Automobili Lamborghini S.p.A.

8. Blow all the oil ducts on the head to remove any impurities.

9. Remove any trace of gaskets on the couplings and carefully clean the area.

10. Check the seal:
- Position all the valves in their housings (**H-Fig.7**) and lubricate with a drop of oil.
- Position the pad of the seal test machine on the mouthpiece (**I-Fig.7**).
- Start the machine and check the data readings:

0.6 - 1 bar

- If the seal does not comply with the values indicated above, check the fit of the valves in their housings. If the problem persists, use emery paste:
  a. Apply the emery paste on the support base of the valve;
  b. Insert the valve in its housing;
  c. Turn the valve briefly to allow the emery paste to have an effect;
  d. Remove the valve from its housing and carefully clean both.

11. Completely re-clean the head.
Also clean the intake/exhaust ducts using a rag soaked in a grease remover. If necessary, use a wire to clear any blockages.

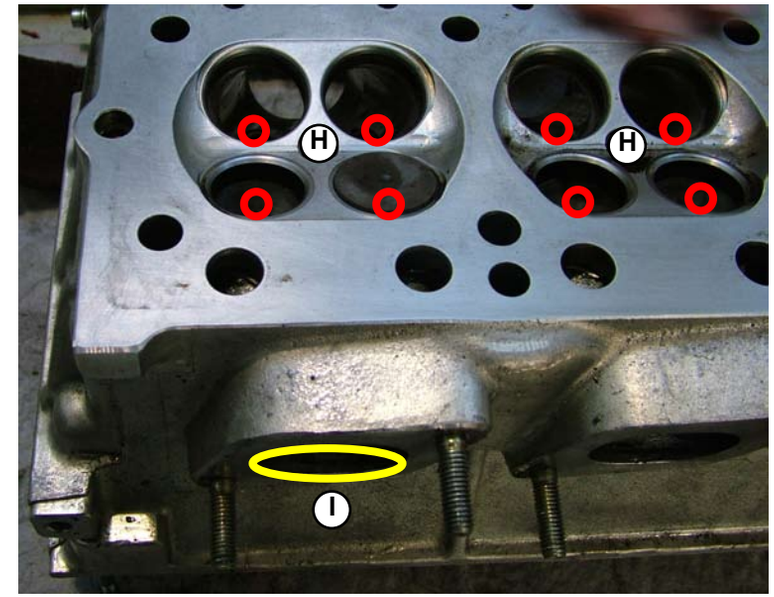

Fig.7

® Automobili Lamborghini S.p.A.
The information and procedures published below are strictly confidential and exclusively for the Lamborghini Dealer Network and Authorized Service Points. All copyrights are property of Automobili Lamborghini S.p.A based on copyright law. All of the PDF chapters in the WEB workshop manuals described below are based on information available at the time of publication. The company reserves the right to make updates and modifications. The following are prohibited: reprinting, reproduction, forwarding to unauthorized people and/or third parties, and translation, including partial, without written authorization from Automobili Lamborghini S.p.A.

Assembling the head:

- Reassemble the tappets, the thickness and the valve unit in their housings **(010905)**, placing them in the correct order.
- Assemble the two camshafts **(010905)**.

STOP **Lubricate with oil during the assembly procedure.**

- Shim the valves **(010902)**.

® Automobili Lamborghini S.p.A.
The information and procedures published below are strictly confidential and exclusively for the Lamborghini Dealer Network and Authorized Service Points. All copyrights are property of Automobili Lamborghini S.p.A based on copyright law. All of the PDF chapters in the WEB workshop manuals described below are based on information available at the time of publication. The company reserves the right to make updates and modifications. The following are prohibited: reprinting, reproduction, forwarding to unauthorized people and/or third parties, and translation, including partial, without written authorization from Automobili Lamborghini S.p.A.

Main and connecting rod journals surface hardness		HVI630
Main and connecting rod journals surface finish		0.2 micron
Main journals	Rated diameter D	62.966 ÷ 62.979
Shoulders	Rated width	40.070 ÷ 40.100
	Oversized thickness	40.578 ÷ 40.608
Bushing/shaft clearance		0.010 ÷ 0.050
Crankshaft axial clearance		0.155 ÷ 0.315

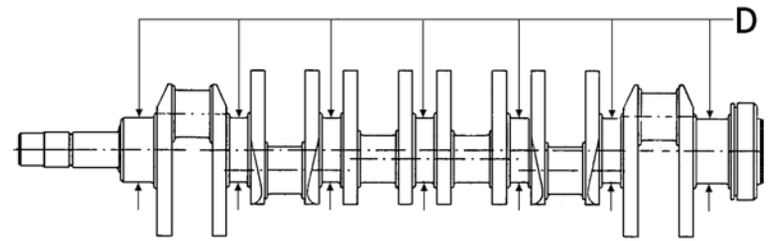

Fig.1

Piston pin seat diameter	**d**	20.020 ÷ 20.030
Connecting rod small end bushing seat diameter	**D**	48.626 ÷ 48.642
Connecting rod big end width		19.000 ÷ 19.050
Connecting rod small end width		19.900 ÷ 19.950
Distance between centers	**i**	134.270 ÷ 134.330
Piston pin assembly clearance		0.020 ÷ 0.080
Connecting rod small end bushing assembly clearance		0.020 ÷ 0.080
Connecting rod journal bearings assembly clearance on crankshaft		0.024 ÷ 0.067

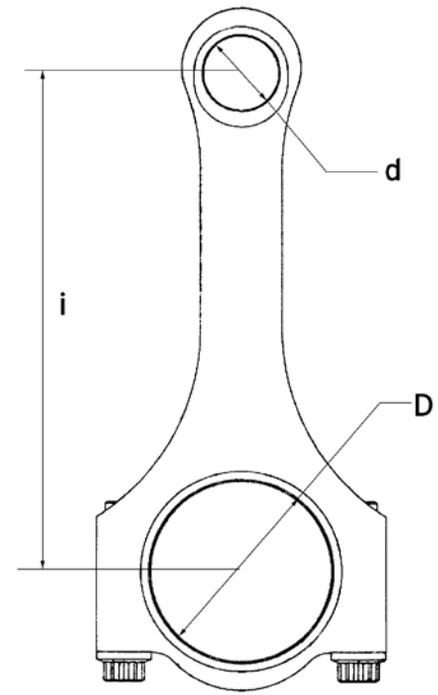

Fig.2

® Automobili Lamborghini S.p.A.
The information and procedures published below are strictly confidential and exclusively for the Lamborghini Dealer Network and Authorized Service Points. All copyrights are property of Automobili Lamborghini S.p.A based on copyright law. All of the PDF chapters in the WEB workshop manuals described below are based on information available at the time of publication. The company reserves the right to make updates and modifications. The following are prohibited: reprinting, reproduction, forwarding to unauthorized people and/or third parties, and translation, including partial, without written authorization from Automobili Lamborghini S.p.A.

Crankshaft axial clearance check

1. Install the dial gauge as shown in the figure (**A-Fig.1**).
2. Reset the dial gauge and by means of the specific tool move the crankshaft axially; the reading on the dial gauge must be:

   Crankshaft axial clearance: 0.155 - 0.315 mm.

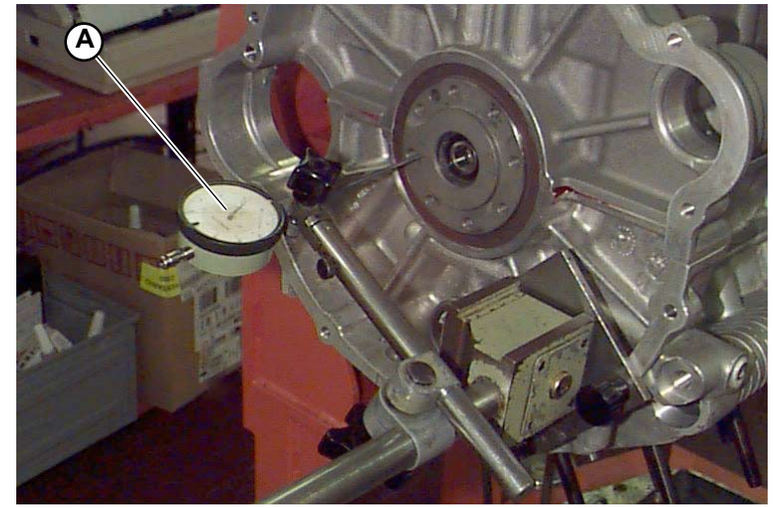

Fig.1

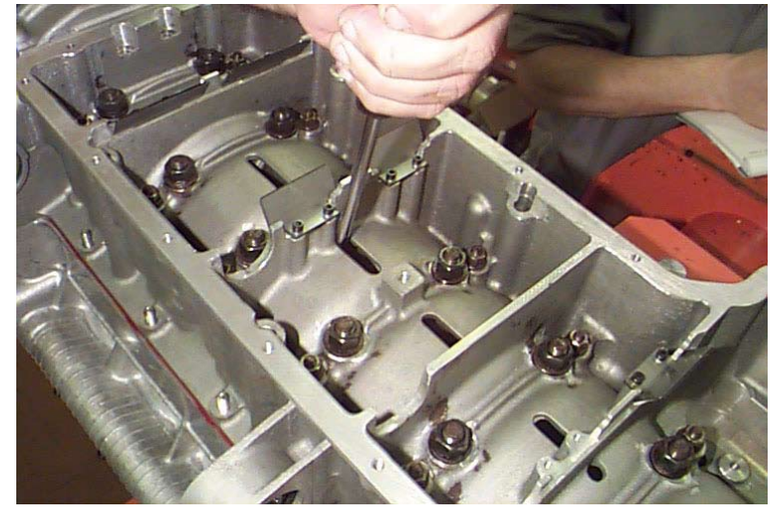

Fig.2

® Automobili Lamborghini S.p.A.
The information and procedures published below are strictly confidential and exclusively for the Lamborghini Dealer Network and Authorized Service Points. All copyrights are property of Automobili Lamborghini S.p.A based on copyright law. All of the PDF chapters in the WEB workshop manuals described below are based on information available at the time of publication. The company reserves the right to make updates and modifications. The following are prohibited: reprinting, reproduction, forwarding to unauthorized people and/or third parties, and translation, including partial, without written authorization from Automobili Lamborghini S.p.A.

Crankshaft and bearing disassemble

Preliminary operations

- Engine disassemble **(010003)**
- Thermostatic valve disassemble **(012103)**
- Gearbox disassemble **(030103)**
- Silencer and exhaust terminals disassemble **(025103)**
- Exhaust manifolds disassemble **(025103)**
- Air intake manifold disassemble **(012903)**
- Alternator, power steering pump and air conditioning system compressor frame disassemble.
- Head disassemble **(010303)**
- Rear differential disassemble **(050903)**
- Disassemble the front crankshaft pulley
- Timing system cover disassemble **(019003)**
- Disassemble the oil pan
- Disassemble the oil draft pipe
- Timing system chain disassemble **(019003)**
- Oil pump disassemble **(011503)**

Crankshaft and bearing disassemble

1. Fix the crankcase with the lower part facing upwards.
2. Unscrew the bolts which mount the crankcase to the lower part of the crankcase (**Fig.1**).
3. Remove the lower part of the crankcase.
4. Remove the connecting rods and the pistons.
5. Remove the crankshaft by means of a specific lifting device (**Fig.2**).
6. Check the crankshaft thoroughly for wear or scratches.
7. Remove the bushings from the lower and upper parts of the crankcase (**Fig.3**).

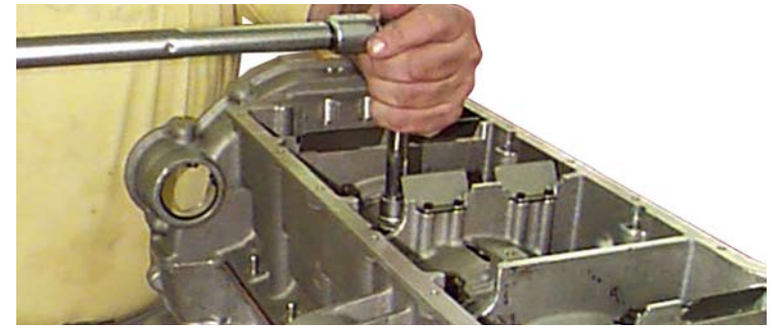

Fig.1

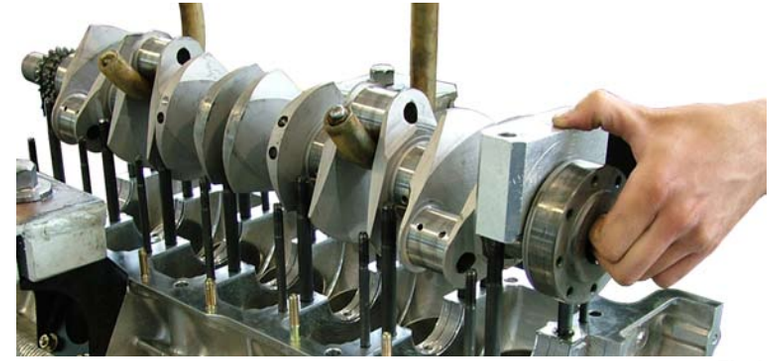

Fig.2

Fig.3

® Automobili Lamborghini S.p.A.
The information and procedures published below are strictly confidential and exclusively for the Lamborghini Dealer Network and Authorized Service Points. All copyrights are property of Automobili Lamborghini S.p.A based on copyright law. All of the PDF chapters in the WEB workshop manuals described below are based on information available at the time of publication. The company reserves the right to make updates and modifications. The following are prohibited: reprinting, reproduction, forwarding to unauthorized people and/or third parties, and translation, including partial, without written authorization from Automobili Lamborghini S.p.A.

8. Check for excessive wear and/or scratches.

9. Remove the lock snap ring and the crankshaft bearing (**Fig.4**).

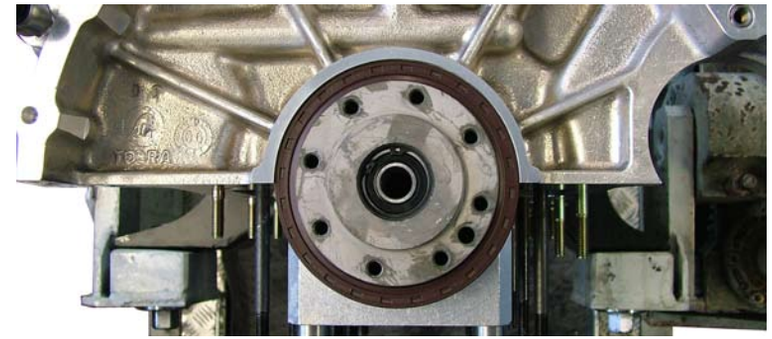

Fig.4

Piston-connecting rod assy disassemble

10. Remove the connecting rod caps.

11. Remove the piston from the big end side.

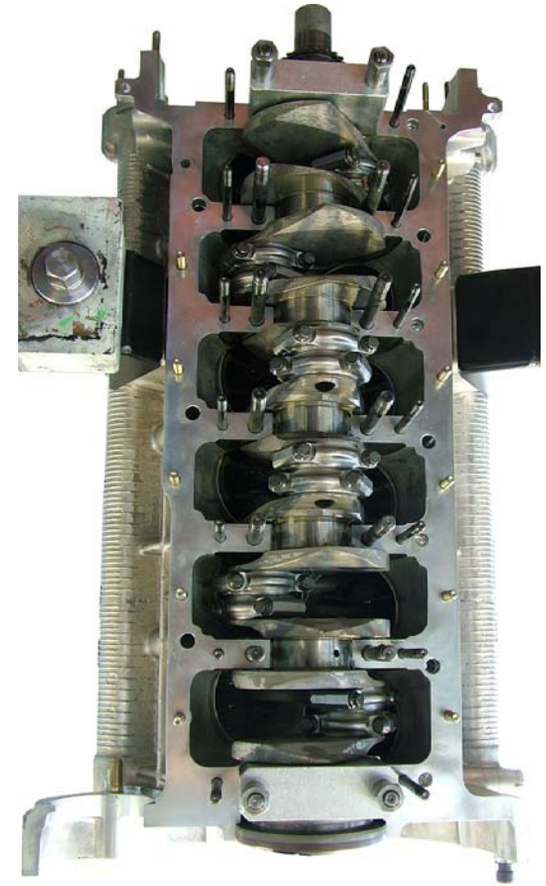

Fig.5

® Automobili Lamborghini S.p.A.
The information and procedures published below are strictly confidential and exclusively for the Lamborghini Dealer Network and Authorized Service Points. All copyrights are property of Automobili Lamborghini S.p.A based on copyright law. All of the PDF chapters in the WEB workshop manuals described below are based on information available at the time of publication. The company reserves the right to make updates and modifications. The following are prohibited: reprinting, reproduction, forwarding to unauthorized people and/or third parties, and translation, including partial, without written authorization from Automobili Lamborghini S.p.A.

Crankshaft assembly

1. Clean thoroughly and blow compressed air on to the crankcase parts and the crankshaft.
2. Apply engine oil on the crankshaft and on the bushings.
3. Install the bushings on the lower and upper parts of the crankcase (**Fig.1**).
4. Install the 4 crankshaft half shims (**B-Fig.2**); the half shim mark must lock against the upper part of the crankcase.

NOTE
Each half shim has two milled sections for the oil flow to the bushing.
These concavities must face the crankshaft shoulders.
Use grease to facilitate the positioning of the half shims.

5. Fit the crankshaft into place.
6. Install the crankshaft bearing and lock it by means of the snap ring.

Fig.1

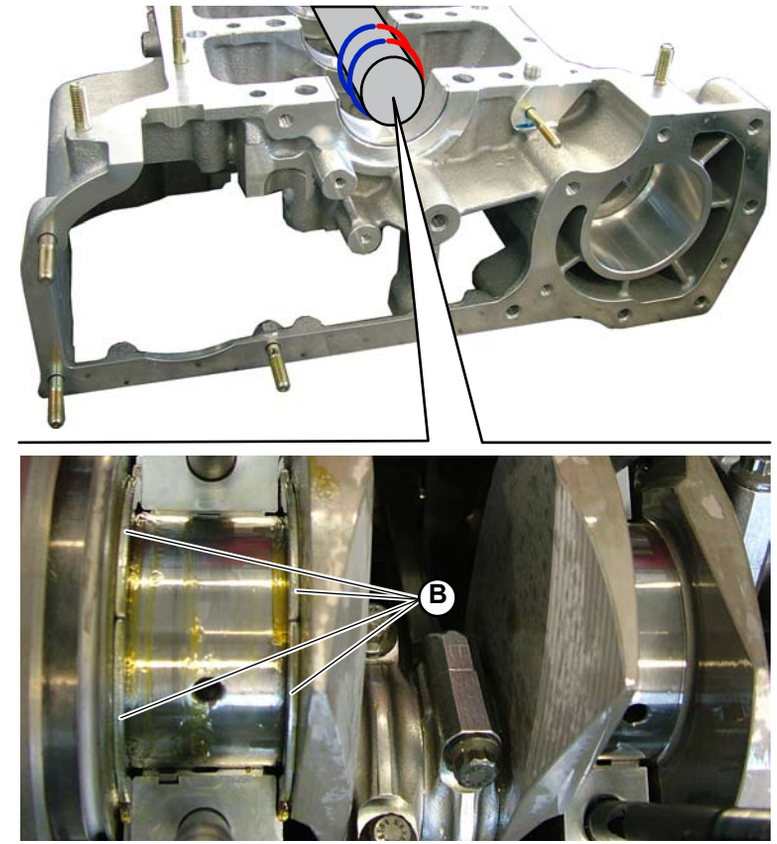

Fig.2

® Automobili Lamborghini S.p.A.
The information and procedures published below are strictly confidential and exclusively for the Lamborghini Dealer Network and Authorized Service Points. All copyrights are property of Automobili Lamborghini S.p.A based on copyright law. All of the PDF chapters in the WEB workshop manuals described below are based on information available at the time of publication. The company reserves the right to make updates and modifications. The following are prohibited: reprinting, reproduction, forwarding to unauthorized people and/or third parties, and translation, including partial, without written authorization from Automobili Lamborghini S.p.A.

7. Assemble the mounting supports on the crankshaft (**C-Fig.3**).

NOTE
After positioning the shaft, lubricate with (**Fig.3**).

8. Install the engine oil seal by means of **(000200)** tool (**D-Fig.3**).

9. Install the connecting rods and the pistons.

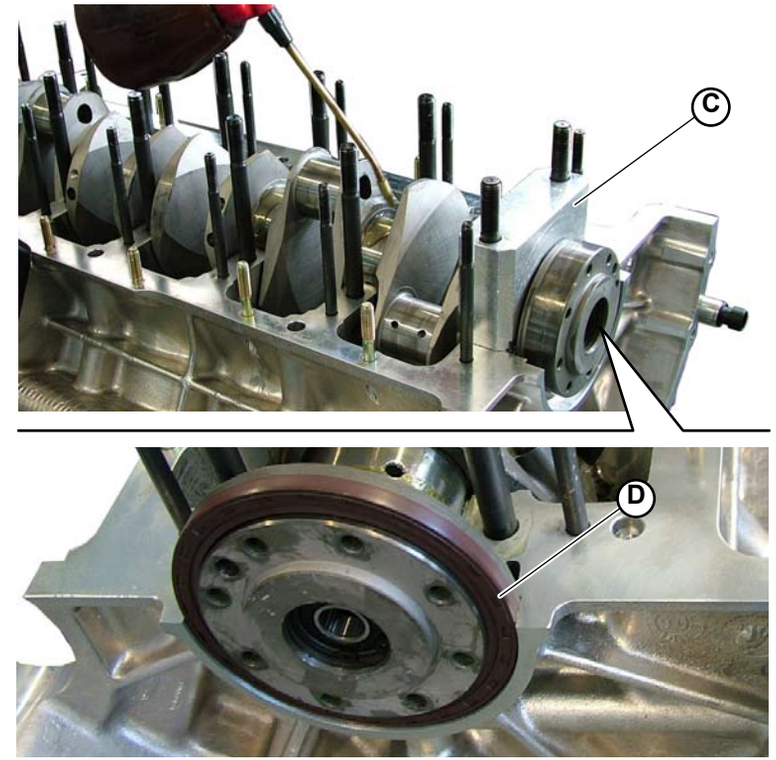

Fig.3

Closing the crankcase

10. If it has not been done yet, erase any trace of paste by means of a small scraper and clean thoroughly the crankcase and its lower part.

11. Degrease the contact areas and apply Three bond 1207B on the areas shown in the figure (**Fig.4**).

12. Apply Molikote 1000 on the stud bolts.

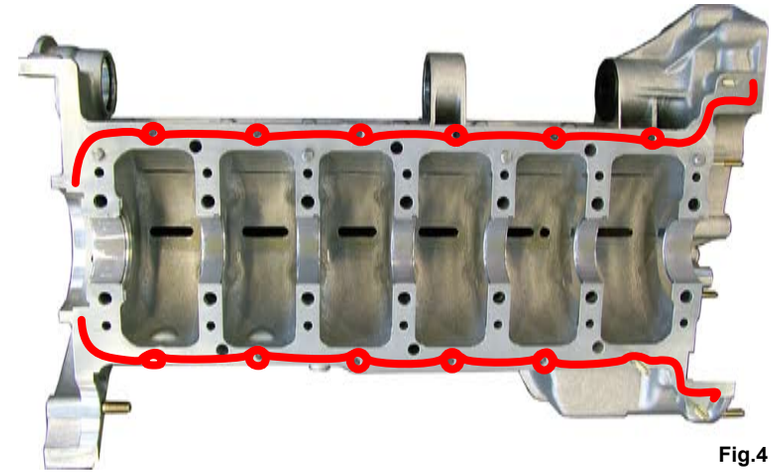
Fig.4

® Automobili Lamborghini S.p.A.
The information and procedures published below are strictly confidential and exclusively for the Lamborghini Dealer Network and Authorized Service Points. All copyrights are property of Automobili Lamborghini S.p.A based on copyright law. All of the PDF chapters in the WEB workshop manuals described below are based on information available at the time of publication. The company reserves the right to make updates and modifications. The following are prohibited: reprinting, reproduction, forwarding to unauthorized people and/or third parties, and translation, including partial, without written authorization from Automobili Lamborghini S.p.A.

13. Position the lower part of the crankcase on the crankcase taking care that all the bushings are in their correct position.

14. Tighten the 12 mm and 8 mm stud bolt nuts to the prescribed tightening torques following the sequence shown in the figure (**Fig.4**).

12 mm stud bolt nuts; **Tightening torque (000800-9c)**
8 mm stud bolt nuts; **Tightening torque (000800-9c)**

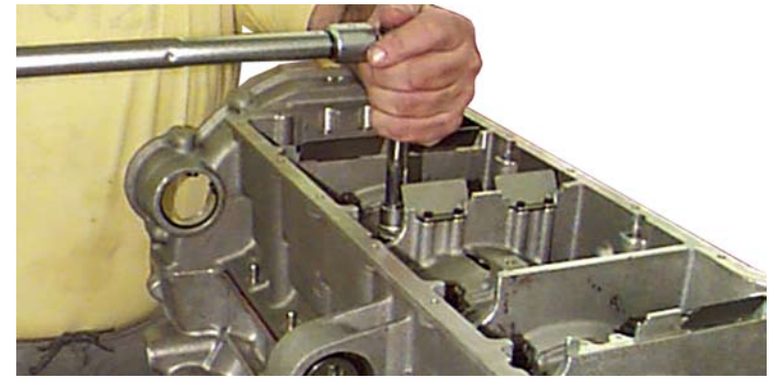

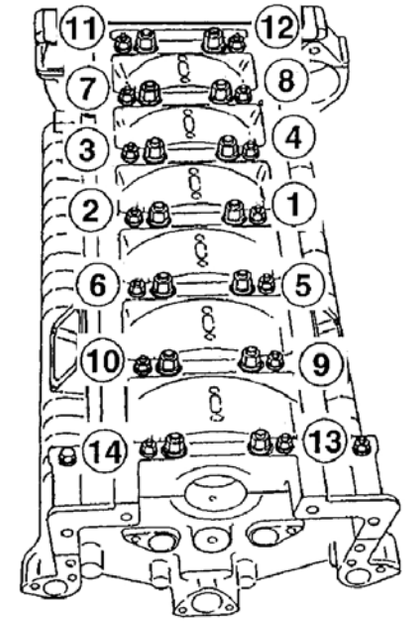

Fig.5

® Automobili Lamborghini S.p.A.
The information and procedures published below are strictly confidential and exclusively for the Lamborghini Dealer Network and Authorized Service Points. All copyrights are property of Automobili Lamborghini S.p.A based on copyright law. All of the PDF chapters in the WEB workshop manuals described below are based on information available at the time of publication. The company reserves the right to make updates and modifications. The following are prohibited: reprinting, reproduction, forwarding to unauthorized people and/or third parties, and translation, including partial, without written authorization from Automobili Lamborghini S.p.A.

During the assembly

15. Install P/N 961195027 liner-stop on the concerned liner to prevent it from moving.

16. Insert the connecting rod-piston assembly in the crankcase, checking that:
- **The connecting rod beads face the crankshaft shoulders.**
- **The numbers printed on the connecting rods caps correspond to the numbers printed on the connecting rod small end.**

17. Apply Molycote 1000 on the threads and on the striking surface of the connecting rod cap bolts and tighten the bolts; **Tightening torque (000800-2a).**

18. Then tighten to angle check.
Tightening values: (000800-2a).

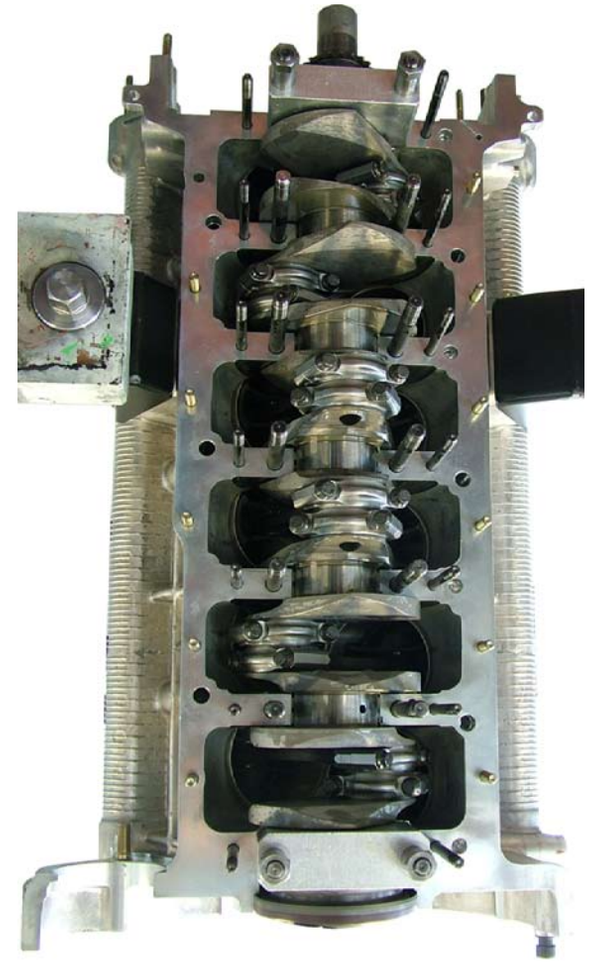

Fig.6

- Oil pump assemble **(011505)**
- Timing system chain assemble **(019005)**
- Assemble the oil draft pipe
- Assemble the oil pan
- Timing system cover assemble **(019005)**
- Assemble the front crankshaft pulley
- Rear differential assemble **(050905)**
- Head assemble **(010305)**
- Alternator, power steering pump and air conditioning system compressor frame assemble.
- Air intake manifold assemble **(012905)**
- Exhaust manifolds assemble **(025105)**
- Silencer and exhaust terminals assemble **(025105)**
- Gearbox assemble **(030105)**
- Thermostatic valve assemble **(012105)**
- Engine assemble **(010005)**

® Automobili Lamborghini S.p.A.
The information and procedures published below are strictly confidential and exclusively for the Lamborghini Dealer Network and Authorized Service Points. All copyrights are property of Automobili Lamborghini S.p.A based on copyright law. All of the PDF chapters in the WEB workshop manuals described below are based on information available at the time of publication. The company reserves the right to make updates and modifications. The following are prohibited: reprinting, reproduction, forwarding to unauthorized people and/or third parties, and translation, including partial, without written authorization from Automobili Lamborghini S.p.A.

Rated diameter		88.00 ± 0.015
Height	**ha**	12
Diameter	**a**	88.00 ± 0.015
Height	**hb**	60
Diameter	**b**	88.00 ± 0.015
Liner protrusion from crankcase edge (with liner-stop pre-load P=30 N)	**s**	0.04 ÷ 0.08
Maximum taper		0.04
Maximum ovalization		0.03
Surface roughness		0.3 micron
Concentricity		0.08

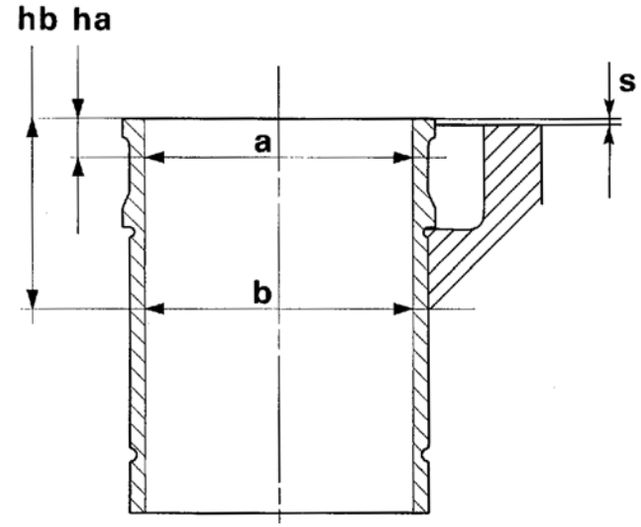

Fig.1

® Automobili Lamborghini S.p.A.
The information and procedures published below are strictly confidential and exclusively for the Lamborghini Dealer Network and Authorized Service Points. All copyrights are property of Automobili Lamborghini S.p.A based on copyright law. All of the PDF chapters in the WEB workshop manuals described below are based on information available at the time of publication. The company reserves the right to make updates and modifications. The following are prohibited: reprinting, reproduction, forwarding to unauthorized people and/or third parties, and translation, including partial, without written authorization from Automobili Lamborghini S.p.A.

Rated diameter		88.00
Total height	**H**	46
Piston crown-piston pin axis height	**H1**	28.00 ± 0.05
Piston pin axis-lower edge height	**H2**	18.00 ± 0.2
Step I slot height	**h**	6.95 ± 0.1
I slot height	**a**	1.2 ± 0.05
II slot height	**b**	1.5 ± 0.04
III slot height	**c**	2 ± 0.03
Piston pin diameter		19.995 ÷ 20.000
Piston pin seat diameter		20.010 ÷ 20.016
Piston pin-piston clearance		0.010 ÷ 0.020

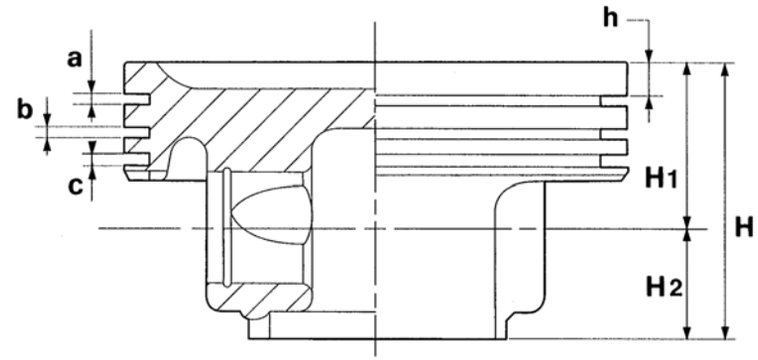

Fig.2

Pistons must always be coupled with liners belonging to the same group. Pistons and liners belonging to the same engine must all be of the same group.

® Automobili Lamborghini S.p.A.
The information and procedures published below are strictly confidential and exclusively for the Lamborghini Dealer Network and Authorized Service Points. All copyrights are property of Automobili Lamborghini S.p.A based on copyright law. All of the PDF chapters in the WEB workshop manuals described below are based on information available at the time of publication. The company reserves the right to make updates and modifications. The following are prohibited: reprinting, reproduction, forwarding to unauthorized people and/or third parties, and translation, including partial, without written authorization from Automobili Lamborghini S.p.A.

SLOT I

Height s	1.20
Thickness b	3.70 ÷ 3.45
Gap between ends	0.20 ÷ 0.40 (*)
Slot-piston ring clearance	0.040 ÷ 0.075

SLOT II

Height s	1.50
Thickness b	3.70 ÷ 3.45
Gap between ends	0.30 ÷ 0.50 (*)
Slot-piston ring clearance	0.020 ÷ 0.062
Diameter b	

SLOT III

Height s	1.08
Thickness b	3.00 ÷ 2.75
Gap between ends	0.25 ÷ 0.50 (*)
Slot-piston ring clearance	0.020 ÷ 0.055

(*) measured with piston ring fitted in the liner.

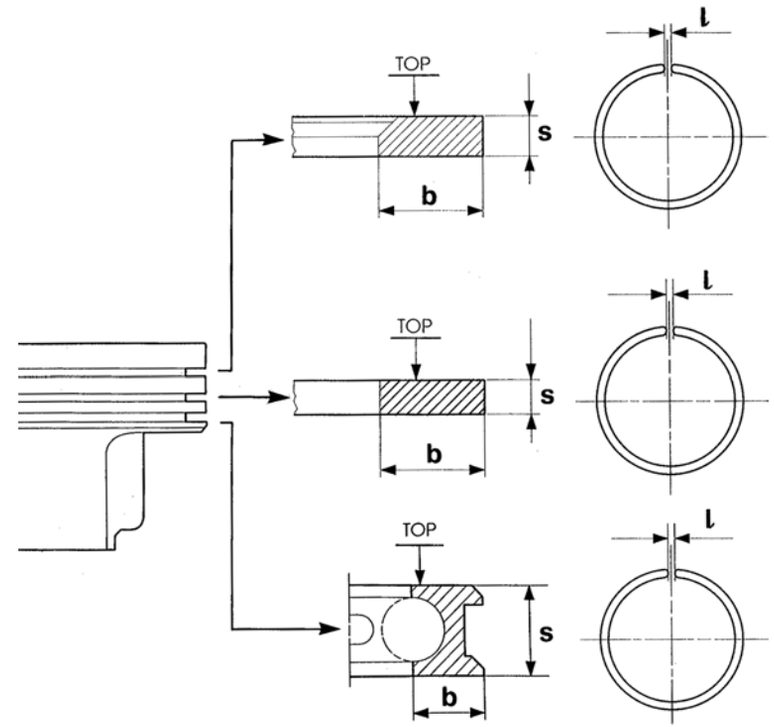

Fig.3

® Automobili Lamborghini S.p.A.
The information and procedures published below are strictly confidential and exclusively for the Lamborghini Dealer Network and Authorized Service Points. All copyrights are property of Automobili Lamborghini S.p.A based on copyright law. All of the PDF chapters in the WEB workshop manuals described below are based on information available at the time of publication. The company reserves the right to make updates and modifications. The following are prohibited: reprinting, reproduction, forwarding to unauthorized people and/or third parties, and translation, including partial, without written authorization from Automobili Lamborghini S.p.A.

Piston-connecting rod assy – Disassemble (010303 and 010503)

1. Remove the clips from the piston races.
2. Extract the piston pin.
3. Remove the bushings from the connecting rod head and cap.

Fig.1

® Automobili Lamborghini S.p.A.
The information and procedures published below are strictly confidential and exclusively for the Lamborghini Dealer Network and Authorized Service Points. All copyrights are property of Automobili Lamborghini S.p.A based on copyright law. All of the PDF chapters in the WEB workshop manuals described below are based on information available at the time of publication. The company reserves the right to make updates and modifications. The following are prohibited: reprinting, reproduction, forwarding to unauthorized people and/or third parties, and translation, including partial, without written authorization from Automobili Lamborghini S.p.A.

Piston-connecting rod assy - Assemble

NOTE
The piston INTAKE side is shown by the arrow (in case of a new piston)(**A-Fig.1**); anyway this side is the one with bigger valve seats.

Fig.1

1. Insert the connecting rod into the piston so that the bushing insertion mark in the connecting rod big end faces the piston intake side (**B-Fig.2**).

2. Lock the piston in the vice.

WARNING
Use adequate protective devices to secure the piston in the vice, to prevent damage to the connecting rod.

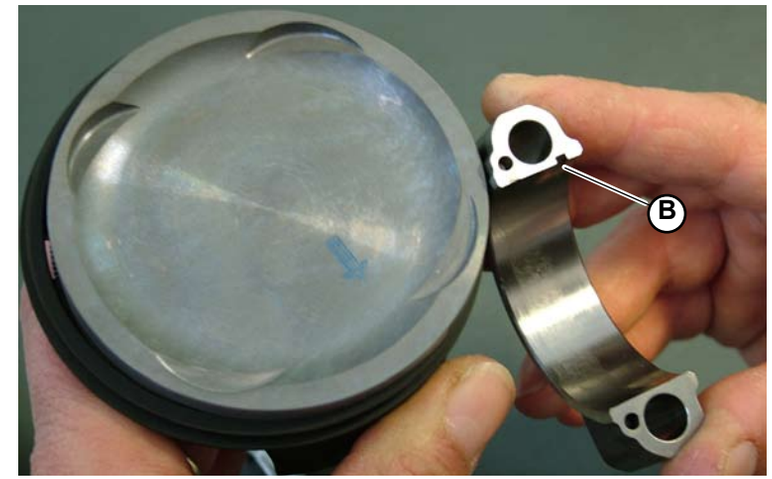

Fig.2

® Automobili Lamborghini S.p.A.
The information and procedures published below are strictly confidential and exclusively for the Lamborghini Dealer Network and Authorized Service Points. All copyrights are property of Automobili Lamborghini S.p.A based on copyright law. All of the PDF chapters in the WEB workshop manuals described below are based on information available at the time of publication. The company reserves the right to make updates and modifications. The following are prohibited: reprinting, reproduction, forwarding to unauthorized people and/or third parties, and translation, including partial, without written authorization from Automobili Lamborghini S.p.A.

3. Insert the first scraper ring inner clip into the lower race (**C-Fig.3**).

4. Insert the scraper ring outer part on the clip (**D-Fig.3**).

5. Insert the second inner clip on the scraper ring (**E-Fig.3**).

Fig.3

WARNING
The scraper ring teeth must face downwards (Fig.4).

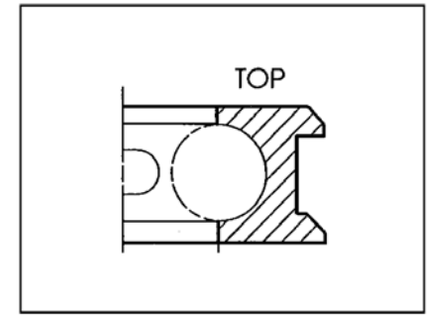

Fig.4

® Automobili Lamborghini S.p.A.
The information and procedures published below are strictly confidential and exclusively for the Lamborghini Dealer Network and Authorized Service Points. All copyrights are property of Automobili Lamborghini S.p.A based on copyright law. All of the PDF chapters in the WEB workshop manuals described below are based on information available at the time of publication. The company reserves the right to make updates and modifications. The following are prohibited: reprinting, reproduction, forwarding to unauthorized people and/or third parties, and translation, including partial, without written authorization from Automobili Lamborghini S.p.A.

Tappet housing diameter (**a-Fig.1**)	33.015 ÷ 33.030
Intake valve seat housing diameter (**b-Fig.1**)	36.350 ÷ 36.370
Exhaust valve seat housing diameter (**c-Fig.1**)	32.550 ÷ 32.570
Intake and exhaust valve guide housing diameter (**d-Fig.1**)	12.00 ÷ 12.018

Intake valve seats

Rated inner diameter	32.500 ÷ 32.530
Rated outer diameter	36.490 ÷ 36.510
Contact band angle	45°

Exhaust valve seats

Rated inner diameter	27.470 ÷ 27.530
Rated outer diameter	32.690 ÷ 32.710
Contact band angle	45°

Intake and exhaust valve guide

Rated outer diameter	12.040 ± 12.050
Inner diameter with pressed and bored guide	6.015

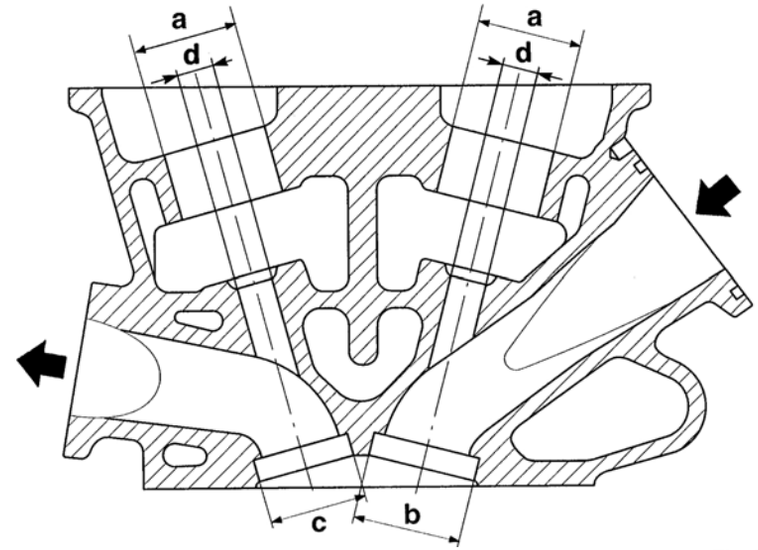

Fig.1

® Automobili Lamborghini S.p.A.
The information and procedures published below are strictly confidential and exclusively for the Lamborghini Dealer Network and Authorized Service Points. All copyrights are property of Automobili Lamborghini S.p.A based on copyright law. All of the PDF chapters in the WEB workshop manuals described below are based on information available at the time of publication. The company reserves the right to make updates and modifications. The following are prohibited: reprinting, reproduction, forwarding to unauthorized people and/or third parties, and translation, including partial, without written authorization from Automobili Lamborghini S.p.A.

Intake valves	
Stem diameter (**d-Fig.2**)	5.95 ± 0.02
Reduced stem diameter (**d1-Fig.2**)	4.59 ± 0.05
Valve head diameter (**D-Fig.2**)	35.40 ± 0.1
Valve seat angle	44°50’ ± 10’
Height (**h-Fig.2**)	104.90 ± 0.15
Tappets support thickness (**s-Fig.2**)	4.70
Exhaust valves	
Stem diameter (**d-Fig.2**)	5.92 ± 0.02
Valve head diameter (**D-Fig.2**)	30.20 ± 0.1
Valve seat angle	44°50’ ± 10’
Height (**h-Fig.2**)	104.01 ± 0.15
Tappets support thickness (**s-Fig.2**)	4.70
Tappets	
Diameter	32.974 ÷ 32.990
Washer thickness range	3.25 ÷ 0.70
with intervals of	0.05
Valve stem-guide fitting	
Intake system assembly clearance	0.025 ÷ 0.055
Exhaust system assembly clearance	0.035 ÷ 0.065
Maximum shift between valve stem and head (head-stem concentricity)	
Intake	0.03
Exhaust	0.03
Assembly clearance between tappet and its seat (intake-exhaust)	0.025 ÷ 0.071

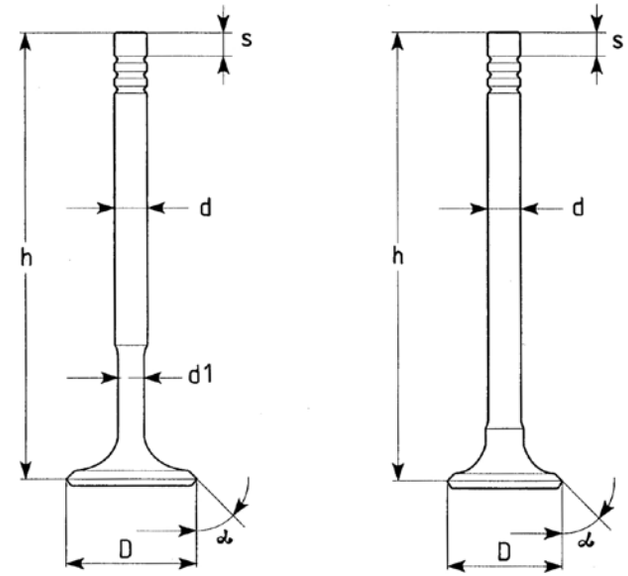

Fig.2

® Automobili Lamborghini S.p.A.
The information and procedures published below are strictly confidential and exclusively for the Lamborghini Dealer Network and Authorized Service Points. All copyrights are property of Automobili Lamborghini S.p.A based on copyright law. All of the PDF chapters in the WEB workshop manuals described below are based on information available at the time of publication. The company reserves the right to make updates and modifications. The following are prohibited: reprinting, reproduction, forwarding to unauthorized people and/or third parties, and translation, including partial, without written authorization from Automobili Lamborghini S.p.A.

Inner spring

Free length (**a-Fig.3**)	44
With closed valve (**b-Fig.3**)	31
With open valve (**c-Fig.3**)	19
Compressed (**d-Fig.3**)	16.25
Load (with closed valve) (**P1-Fig.3**)	13 ± 0.5 Kg
Load (with open valve) (**P2-Fig.3**)	25.5 ± 1.2 Kg
Number of active coils	5

Outer spring

Free length (**a-Fig.3**)	41
With closed valve (**b-Fig.3**)	33
With open valve (**c-Fig.3**)	21
Compressed (**d-Fig.3**)	16.5
Load (with closed valve) (**P1-Fig.3**)	16 ± 0.5 Kg
Load (with open valve) (**P2-Fig.3**)	41.2 ± 1.2 Kg
Number of active coils	3.5

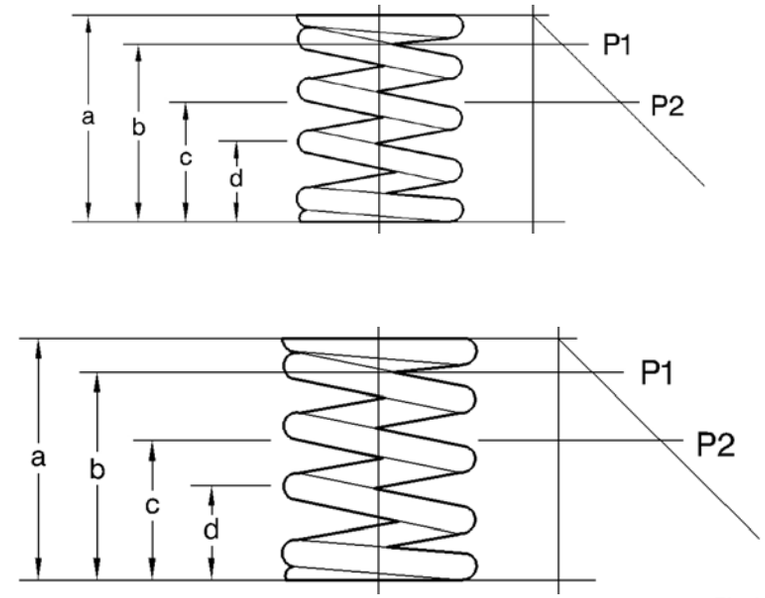

Fig.3

® Automobili Lamborghini S.p.A.
The information and procedures published below are strictly confidential and exclusively for the Lamborghini Dealer Network and Authorized Service Points. All copyrights are property of Automobili Lamborghini S.p.A based on copyright law. All of the PDF chapters in the WEB workshop manuals described below are based on information available at the time of publication. The company reserves the right to make updates and modifications. The following are prohibited: reprinting, reproduction, forwarding to unauthorized people and/or third parties, and translation, including partial, without written authorization from Automobili Lamborghini S.p.A.

The present section contains the following adjustment sequences:

A) MECHANICAL TIMING OF HEAD
B) VALVE CLEARANCE

A) MECHANICAL TIMING OF HEAD

Mechanical head timing can be carried out two ways:
- **using a dial gauge**
- **using special tools**

A1) Mechanical head timing with a dial gauge

Prerequisites
- Engine on a workbench.
- The bolts that secure the variable valve timing mechanism must be loosened so that the chain turns freely, without being integral with the camshaft seat.

Head timing

Intake
(The instructions within brackets refer to the right cylinder bank.)

1. Assemble the crank mechanism on the crankshaft (**A-Fig.1**).
2. Assemble the dial gauge (**B-Fig.1**) on cylinder no.1 (no.7).
3. Turn the crankshaft, placing cylinder no.1 (no.7) at the TDC (top dead center); this is verified when the dial gauge's pointer indicates 0 (zero) (**C-Fig.1**).
4. Reset the goniometer according to the reference mark (**D-Fig.1**).

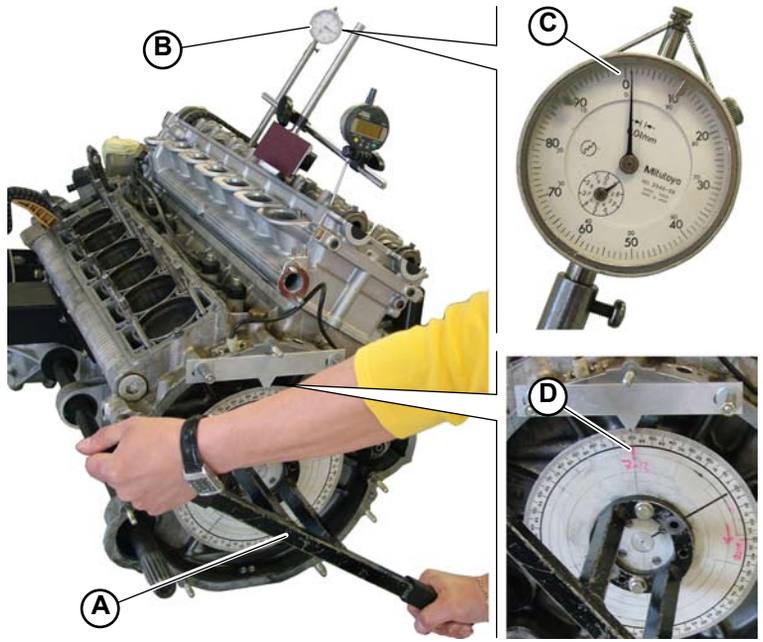

Fig.1

® Automobili Lamborghini S.p.A.
The information and procedures published below are strictly confidential and exclusively for the Lamborghini Dealer Network and Authorized Service Points. All copyrights are property of Automobili Lamborghini S.p.A based on copyright law. All of the PDF chapters in the WEB workshop manuals described below are based on information available at the time of publication. The company reserves the right to make updates and modifications. The following are prohibited: reprinting, reproduction, forwarding to unauthorized people and/or third parties, and translation, including partial, without written authorization from Automobili Lamborghini S.p.A.

5. Install the digital dial gauge (**E-Fig.2**) with the support on the spacer ring of the intake valve of cylinder no. 6 (no. 12).

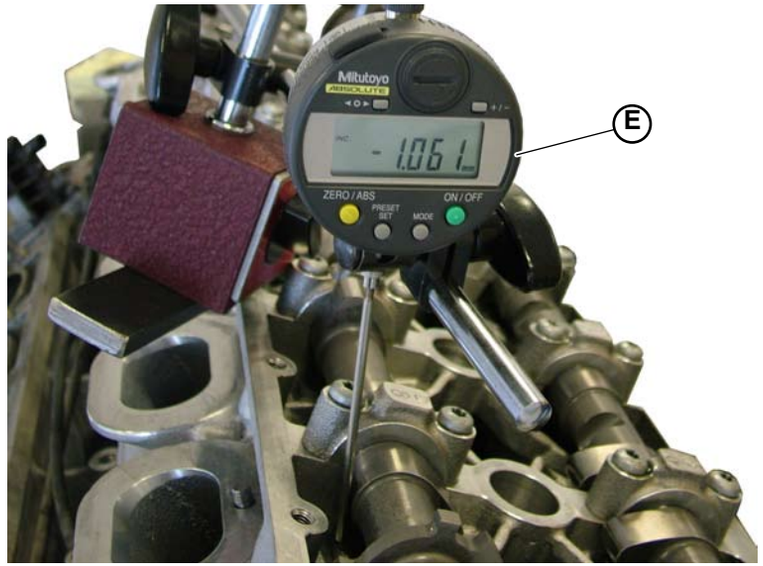

Fig.2

6. Turn the camshaft seat using a 26 mm wrench (**F-Fig.3**) until the digital dial gauge indicates 1 mm.
7. Tighten the bolts of the variable valve timing mechanism, making it integral with the camshaft seat.
8. Recover the timing chain clearance by turning the crankshaft approximately 60° counter-clockwise.
9. Reset the digital dial gauge (yellow button) and turn the crankshaft clockwise, 12° past the reference mark. The value indicated on the dial gauge must be 1 mm ± 0.05.

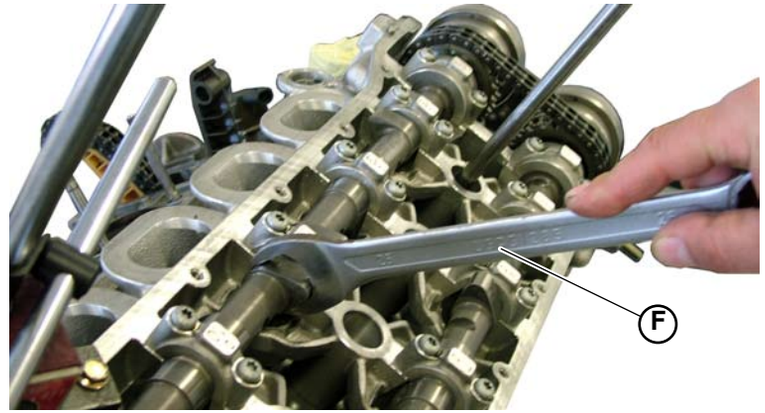

Fig.3

® Automobili Lamborghini S.p.A.
The information and procedures published below are strictly confidential and exclusively for the Lamborghini Dealer Network and Authorized Service Points. All copyrights are property of Automobili Lamborghini S.p.A based on copyright law. All of the PDF chapters in the WEB workshop manuals described below are based on information available at the time of publication. The company reserves the right to make updates and modifications. The following are prohibited: reprinting, reproduction, forwarding to unauthorized people and/or third parties, and translation, including partial, without written authorization from Automobili Lamborghini S.p.A.

Exhaust

10. Turn the crankshaft so that it is repositioned with the TDC (top dead center); check that the dial gauge's pointer continues to indicate 0 (zero).
11. Move the digital dial gauge (**E-Fig.4**) onto the exhaust side with the support on the spacer ring of the exhaust valve of cylinder no.6 (no.12).

Fig.4

12. Loosen the bolts of the variable valve timing mechanism.
13. Turn the camshaft seat using a 26 mm wrench until the digital dial gauge indicates 1 mm.
14. Tighten the bolts of the variable valve timing mechanism, making it integral with the camshaft seat.
15. Recover the timing chain clearance by turning the crankshaft approximately 60° counter-clockwise.
16. Reset the digital dial gauge (yellow button) and turn the crankshaft clockwise, 12° before top dead center. The value indicated on the dial gauge must be 1 mm ± 0.05.

17. Tighten the bolts of the variable valve timing mechanism **(000800-30d)** to the prescribed torque with molicote.

® Automobili Lamborghini S.p.A.
The information and procedures published below are strictly confidential and exclusively for the Lamborghini Dealer Network and Authorized Service Points. All copyrights are property of Automobili Lamborghini S.p.A based on copyright law. All of the PDF chapters in the WEB workshop manuals described below are based on information available at the time of publication. The company reserves the right to make updates and modifications. The following are prohibited: reprinting, reproduction, forwarding to unauthorized people and/or third parties, and translation, including partial, without written authorization from Automobili Lamborghini S.p.A.

A2) Mechanical head timing with special tools

Prerequisites

- The bolts that secure the variable valve timing mechanism must be loosened so that the chain turns freely, without being integral with the camshaft.

Head timing

1. If the engine is on a workbench, assemble the crank mechanism on the crankshaft; if the engine is on board, the rotation can be carried out directly from the pulley.

2. Assemble the dial gauge (**A-Fig.5**) on cylinder no. 1.

3. Turn the crankshaft, placing cylinder no.1 at TDC (top dead center); this is verified when the dial gauge's pointer indicates 0 (zero).

4. Assemble the timing tools on the heads **(000200-12c)**, being careful to install the LH tool on the left head (**B-Fig.5**) and the RH tool on the right head (**C-Fig.5**).

The tools must be secured directly onto the camshafts of both heads so that the position of the camshafts is locked into place according to the timing (Fig.6); if the tool is not accurately assembled, turn the camshafts slightly using a 26 mm wrench to the correct position at which to secure the tool.

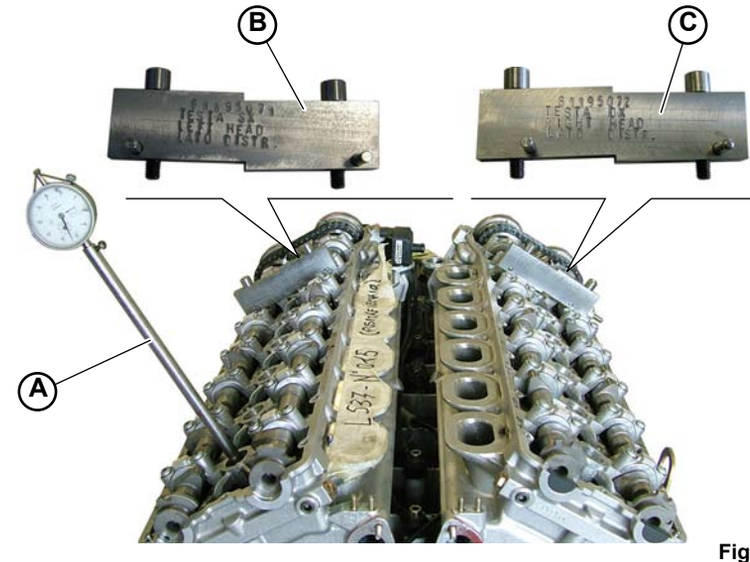

Fig.5

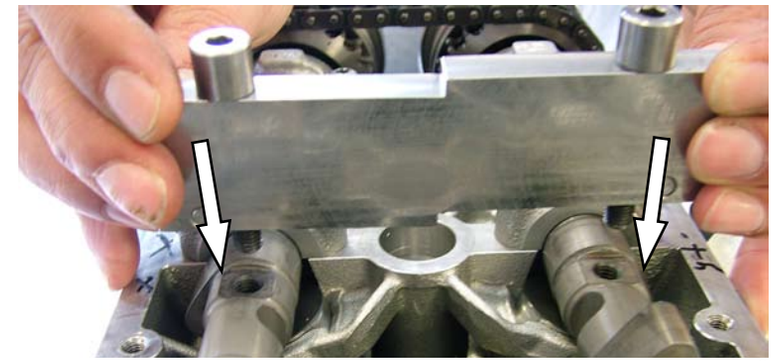

Fig.6

® Automobili Lamborghini S.p.A.
The information and procedures published below are strictly confidential and exclusively for the Lamborghini Dealer Network and Authorized Service Points. All copyrights are property of Automobili Lamborghini S.p.A based on copyright law. All of the PDF chapters in the WEB workshop manuals described below are based on information available at the time of publication. The company reserves the right to make updates and modifications. The following are prohibited: reprinting, reproduction, forwarding to unauthorized people and/or third parties, and translation, including partial, without written authorization from Automobili Lamborghini S.p.A.

5. Tighten the variable valve timing bolts **(000800-30d)** to the prescribed torque with Molicote.

STOP **Secure the 4 variable valve timing mechanisms onto the heads, following the ascending assembly order from 1 to 4 shown in Fig.7.**

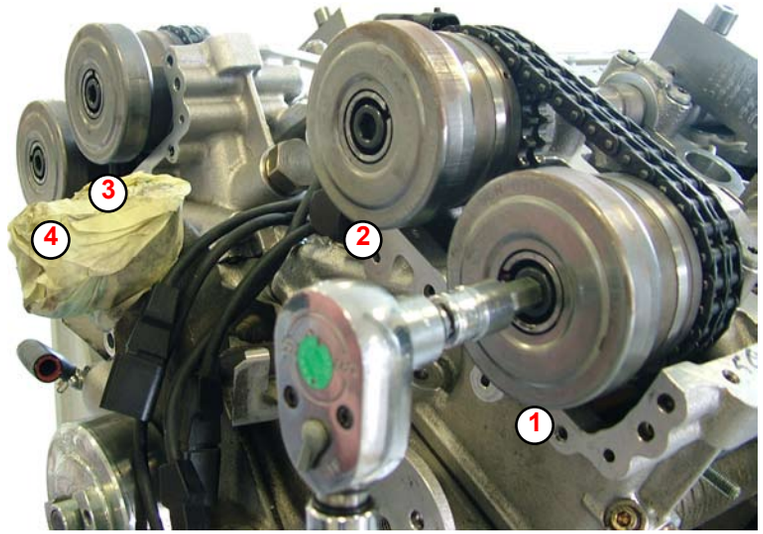

Fig.7

Verifying proper timing

- Remove the U-bolts above the camshafts.
- Rotate the crankshaft counter-clockwise twice using the crank mechanism and locate dead center.
- Verify the planarity between the U-bolts and the camshaft seat.

® Automobili Lamborghini S.p.A.
The information and procedures published below are strictly confidential and exclusively for the Lamborghini Dealer Network and Authorized Service Points. All copyrights are property of Automobili Lamborghini S.p.A based on copyright law. All of the PDF chapters in the WEB workshop manuals described below are based on information available at the time of publication. The company reserves the right to make updates and modifications. The following are prohibited: reprinting, reproduction, forwarding to unauthorized people and/or third parties, and translation, including partial, without written authorization from Automobili Lamborghini S.p.A.

B) VALVE CLEARANCE

Check the valve clearance when the engine is cold.

Intake	Exhaust
0.30 ± 0.05 mm	0.50 ± 0.05 mm

1. Check that the valve clearance corresponds to the values above, shown on each tappet: When the head is removed, use the tool (**A-Fig.8**).

Use the thickness gauge to measure the thickness between all the shims and the camshaft lobes. Make a note of any differences required to achieve the set value.

2. If the clearance differs from the established one, replace the spacer rings (**B-Fig.9**) under the tappets (**B-Fig.9**)**(010909)** until the optimum value is achieved.

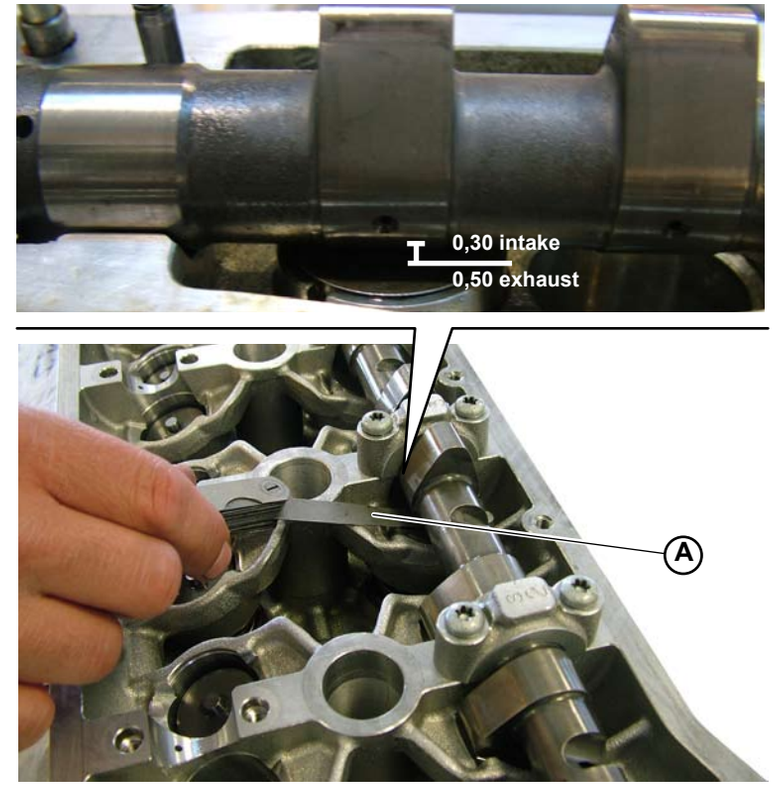

Fig.8

Fig.9

® Automobili Lamborghini S.p.A.
The information and procedures published below are strictly confidential and exclusively for the Lamborghini Dealer Network and Authorized Service Points. All copyrights are property of Automobili Lamborghini S.p.A based on copyright law. All of the PDF chapters in the WEB workshop manuals described below are based on information available at the time of publication. The company reserves the right to make updates and modifications. The following are prohibited: reprinting, reproduction, forwarding to unauthorized people and/or third parties, and translation, including partial, without written authorization from Automobili Lamborghini S.p.A.

This section explains how to disassemble:

A) Camshafts
B) Valves

A) Disassembling the camshafts

STOP Before carrying out this procedure, disassemble the engine head and then continue on a workbench.

Preliminary operations

- Disassemble the intake manifold **(012903)**.
- Disassemble the head covers **(010303)**.
- Disassemble the variable valve timing mechanism **(011603)**.

Disassembling the shafts

1. Remove the supports of the camshafts **(A-Fig.1)**, unscrewing the relative pairs of screws **(B-Fig.1)**.

STOP To remove the camshaft, loosen the screws of the supports and turn the shaft slightly (using a 26 mm wrench), discharging the valves still under pressure; immediate removal of the shaft can be dangerous: the shaft could be launched off of its seat because the valves are still under pressure!

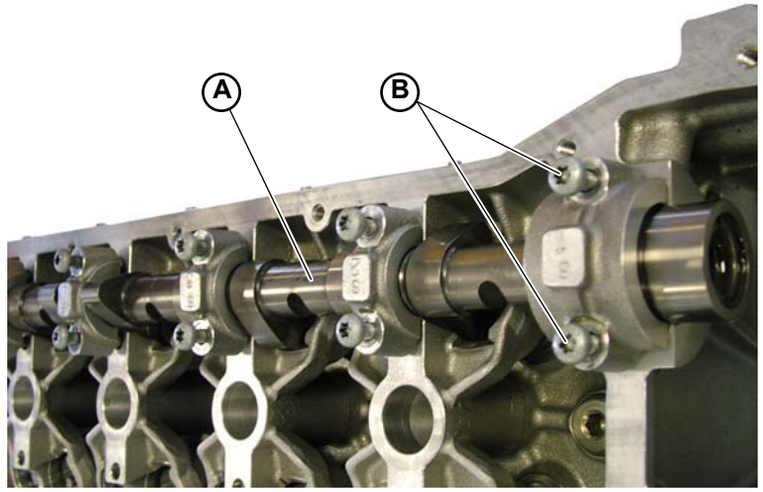

Fig.1

® Automobili Lamborghini S.p.A.
The information and procedures published below are strictly confidential and exclusively for the Lamborghini Dealer Network and Authorized Service Points. All copyrights are property of Automobili Lamborghini S.p.A based on copyright law. All of the PDF chapters in the WEB workshop manuals described below are based on information available at the time of publication. The company reserves the right to make updates and modifications. The following are prohibited: reprinting, reproduction, forwarding to unauthorized people and/or third parties, and translation, including partial, without written authorization from Automobili Lamborghini S.p.A.

B) Disassembling the valves

Preliminary operations

- With the engine on a workbench, disassemble the camshafts **(Point A)**.

Disassembling the valves

1. Remove the tappets **(A-Fig.2)** from their housings.

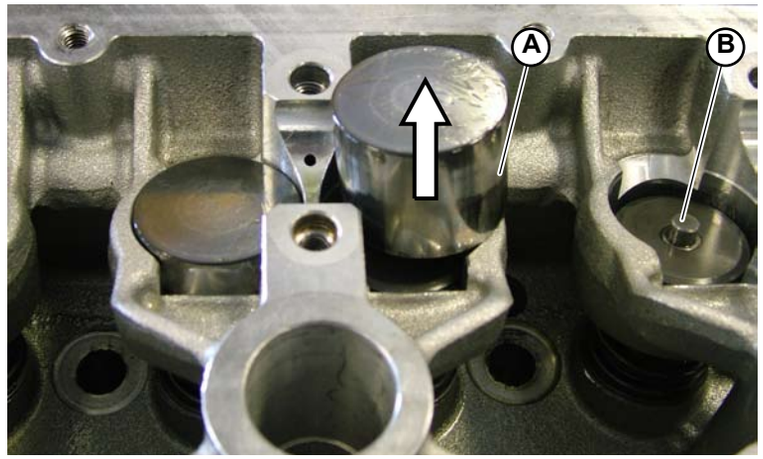

Fig.2

2. Remove the spacers **(B-Fig.2)** positioned underneath the tappets.

3. Using the special tool **(C-Fig.3)**, press the spacer ring to extract the 2 cotters **(D-Fig.3)**.

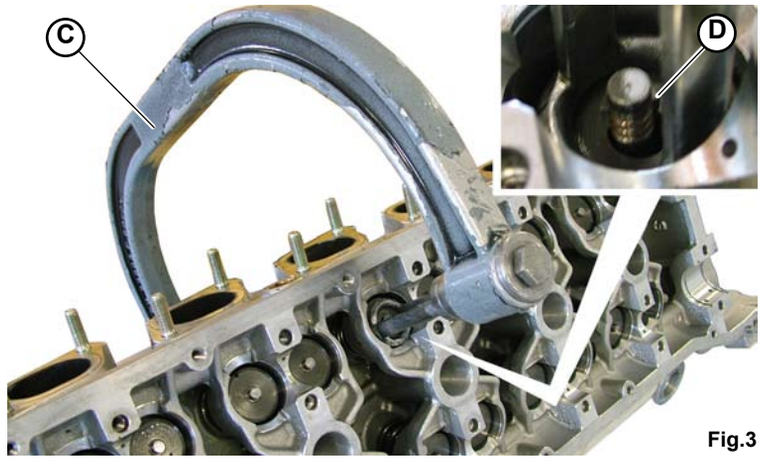

Fig.3

4. Remove the cotters **(D-Fig.3)**, then the tool, followed by the entire valve unit **(Fig.4)**:

- **a.** valve
- **b.** seat
- **c.** valve guide
- **d.** oil seal
- **e.** lower spacer ring
- **f.** spring
- **g.** spring
- **h.** upper spacer ring
- **i.** 2 cotters (already removed)
- **l.** spacer (already removed)

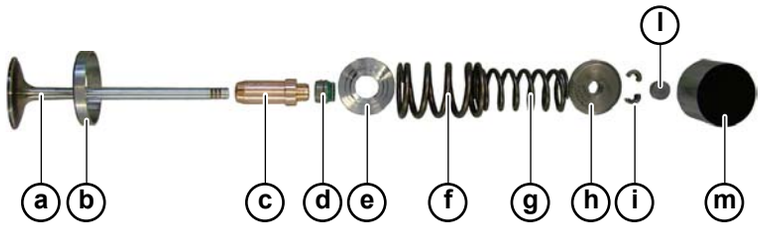

Fig.4

® Automobili Lamborghini S.p.A.
The information and procedures published below are strictly confidential and exclusively for the Lamborghini Dealer Network and Authorized Service Points. All copyrights are property of Automobili Lamborghini S.p.A based on copyright law. All of the PDF chapters in the WEB workshop manuals described below are based on information available at the time of publication. The company reserves the right to make updates and modifications. The following are prohibited: reprinting, reproduction, forwarding to unauthorized people and/or third parties, and translation, including partial, without written authorization from Automobili Lamborghini S.p.A.

This section explains how to assemble:

A) Valves
B) Camshafts

A) Assembling the valves

1. Lubricate valve stem **(a-Fig.1)** and valve guide **(b-Fig.1)** with engine oil.
2. Insert the valve into the guide **(c-Fig.1)** and the oil seal **(d-Fig.1)**.
3. Install the lower spacer ring **(e-Fig.1)**, the springs **(f/g-Fig.1)** and the upper spacer ring **(h-Fig.1).**

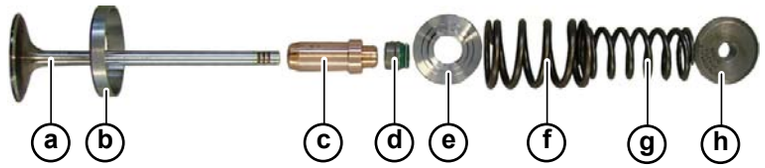

Fig.1

4. Using the special tool **(A-Fig.2)**, press the spacer ring to insert the 2 cotters **(B-Fig.2).**

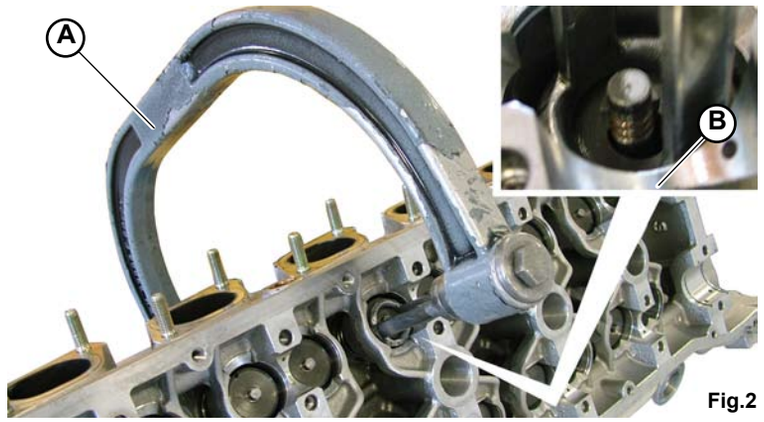

Fig.2

5. Position the spacers **(C-Fig.3)** above the upper spacer rings.
6. Remove the tappets **(D-Fig.3)** from their housings.

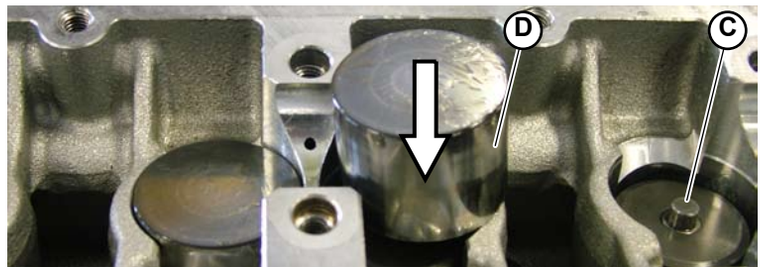

Fig.3

® Automobili Lamborghini S.p.A.
The information and procedures published below are strictly confidential and exclusively for the Lamborghini Dealer Network and Authorized Service Points. All copyrights are property of Automobili Lamborghini S.p.A based on copyright law. All of the PDF chapters in the WEB workshop manuals described below are based on information available at the time of publication. The company reserves the right to make updates and modifications. The following are prohibited: reprinting, reproduction, forwarding to unauthorized people and/or third parties, and translation, including partial, without written authorization from Automobili Lamborghini S.p.A.

B) Assembling the camshafts

1. Clean all the camshaft **(A-Fig.4)** and head **(B-Fig.4)** lubrication holes thoroughly; apply only engine oil.
2. Position the camshafts on the supports, following the instructions printed on the head.
3. Position the supports following the numbers printed on the caps and on the head.

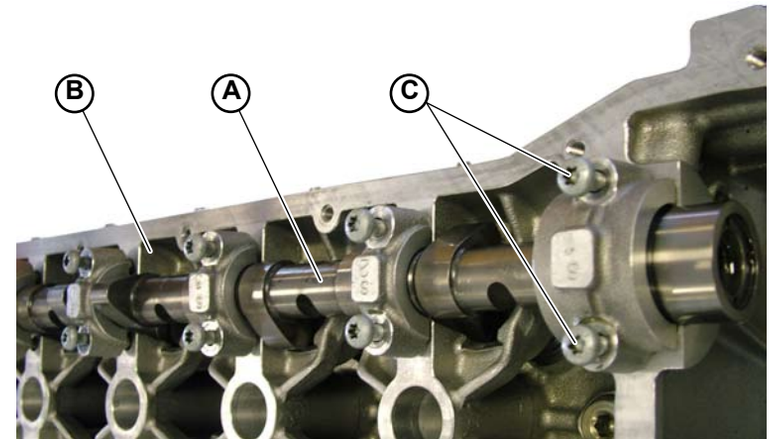

Fig.4

STOP

- **Check that the intake and exhaust components have been positioned properly.**
- **Position the supports in the correct order from no. 1 to no. 14; when assembling the first support, make sure that the oil seals (D-Fig.5) have been positioned in their respective housings (E-Fig.5).**

4. Tighten the screws **(C-Fig.4)** of the supports.
   Screw attachment; **tightening torque (000800-1b).**

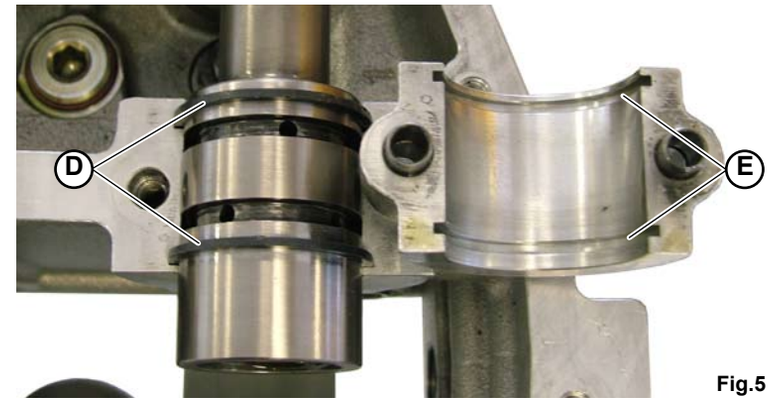

Fig.5

STOP

When assembling the camshaft, as the supports are gradually secured, turn the shaft slightly (using a 26 mm wrench) adjusting its position on the valves, so that all of the screws can be attached.

- Assemble the variable valve timing mechanism **(011605)**.
- Assemble the head covers Assemble the head covers **(010305)**.
- Assemble the intake manifold **(012905)**.
- Assemble the engine**(010005)**.

® Automobili Lamborghini S.p.A.
The information and procedures published below are strictly confidential and exclusively for the Lamborghini Dealer Network and Authorized Service Points. All copyrights are property of Automobili Lamborghini S.p.A based on copyright law. All of the PDF chapters in the WEB workshop manuals described below are based on information available at the time of publication. The company reserves the right to make updates and modifications. The following are prohibited: reprinting, reproduction, forwarding to unauthorized people and/or third parties, and translation, including partial, without written authorization from Automobili Lamborghini S.p.A.

Valves overhaul

Preliminary operations

- Extract the two camshafts **(010903)**.
- Remove the tappets and the valve unit from their housings **(010903)** and place them in the correct order on the workbench so it is possible to re-establish their original positions when they are reassembled.

Overhaul

1. Check the head valve (**A-Fig.1**) and the seat (**B-Fig.1**) conditions; if necessary, replace the valve or remake the seat.

To clean the valves, proceed as follows:
- position the valve on a pillar drill. Before securing the valve to the drill, wrap tin foil around the drill-valve contact area on the valve.
- Start the pillar drill.
- While the valve is turning, clean with a scouring pad.
- Remove the valve from the drill and wash completely.

Take care not to spoil the valve stem.

2. Check the valve guides (**C-Fig.1**) and the oil seal (**D-Fig.1**) wear; if necessary, replace the valve guide following the technical specifications; always replace the seal.

3. Clean the tappet, spring and shim pack (**E-Fig.1**) in the following order:
a. Wash.
b. Remove grease.
c. Blow.

- Reassemble the tappets and the valve unit in their housings **(010905)**, placing them in the correct order.
- Assemble the two camshafts **(010905)**.

STOP **Lubricate with oil during the assembly procedure.**

- Shim the valves **(010902)**.

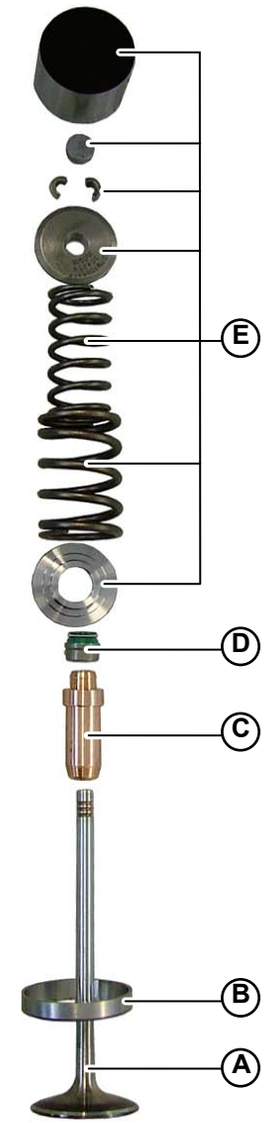

Fig.1

® Automobili Lamborghini S.p.A.
The information and procedures published below are strictly confidential and exclusively for the Lamborghini Dealer Network and Authorized Service Points. All copyrights are property of Automobili Lamborghini S.p.A based on copyright law. All of the PDF chapters in the WEB workshop manuals described below are based on information available at the time of publication. The company reserves the right to make updates and modifications. The following are prohibited: reprinting, reproduction, forwarding to unauthorized people and/or third parties, and translation, including partial, without written authorization from Automobili Lamborghini S.p.A.

Oil pump check

Check tightening torques (000800) and the integrity of the clamps on the oil tank and the intake manifold on a regular basis.

® Automobili Lamborghini S.p.A.
The information and procedures published below are strictly confidential and exclusively for the Lamborghini Dealer Network and Authorized Service Points. All copyrights are property of Automobili Lamborghini S.p.A based on copyright law. All of the PDF chapters in the WEB workshop manuals described below are based on information available at the time of publication. The company reserves the right to make updates and modifications. The following are prohibited: reprinting, reproduction, forwarding to unauthorized people and/or third parties, and translation, including partial, without written authorization from Automobili Lamborghini S.p.A.

The present section contains the following disassembly sequences:
A) Oil pump chain
B) Oil pump

A) Oil pump chain

Prerequisites
- Heads removed **(010303)**.
- Timing system cover removed **(019003)**.

Oil pump chain
1. Unscrew the two bolts with washer (**A-Fig.1**) and remove the oil pump chain tightener.
2. Unscrew the bolt that secures the toothed wheel to the oil pump and remove the chain from the engine pinion.
3. Check the chain, oil pump reel and engine pinion conditions; replace the oil pump reel unscrewing the bolt and locking it.

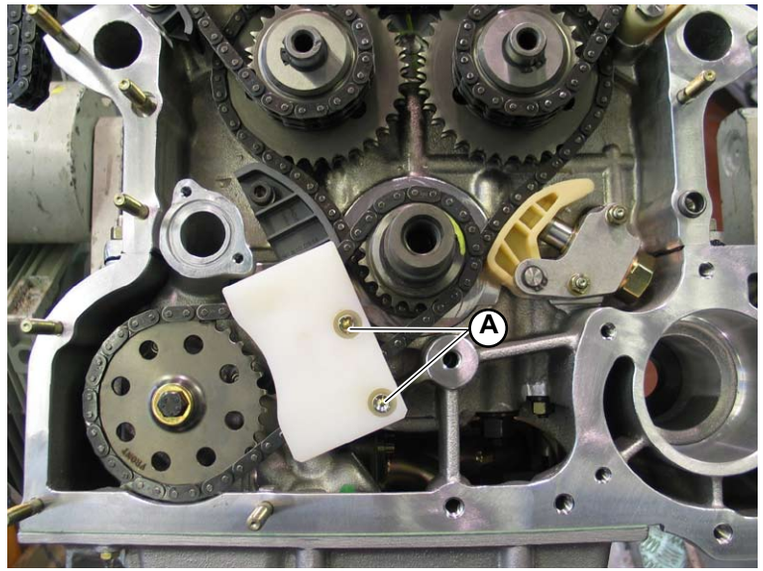

Fig.1

® Automobili Lamborghini S.p.A.
The information and procedures published below are strictly confidential and exclusively for the Lamborghini Dealer Network and Authorized Service Points. All copyrights are property of Automobili Lamborghini S.p.A based on copyright law. All of the PDF chapters in the WEB workshop manuals described below are based on information available at the time of publication. The company reserves the right to make updates and modifications. The following are prohibited: reprinting, reproduction, forwarding to unauthorized people and/or third parties, and translation, including partial, without written authorization from Automobili Lamborghini S.p.A.

B) Oil pump

Prerequisites

- This operation is possible only if the power train is on the laboratory test wheel **(010003).**
- Timing system cover removed **(019003).**
- Oil pump chain removed **(019003).**

Pump and oil draft pipe

1. Remove the oil pan and its gasket from the lower part of the crankcase **(011703).**
2. Unscrew the oil draft pipe mounting screw (**A-Fig.2**) to the lower part of the crankcase.

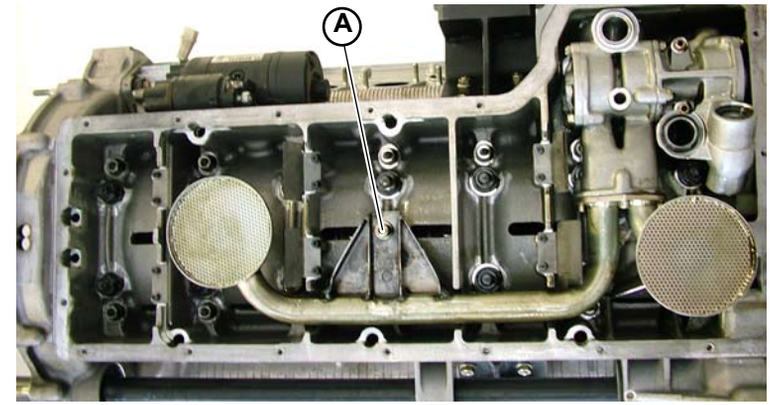

Fig.2

3. Unscrew the 2 socket head screws and the hexagonal-head screw (**B-Fig.3**) which mount the oil pump to the lower part of the crankcase.
4. Take the oil pump with the draft pipe out of the lower part of the crankcase.
5. Remove the oil draft pipe from the pump.

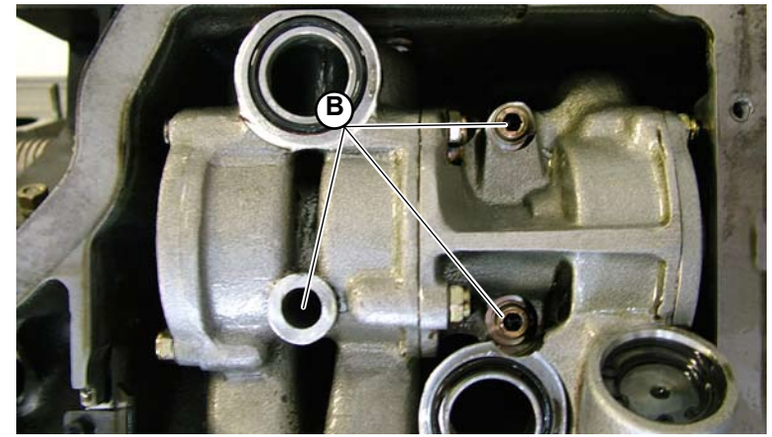

Fig.3

® Automobili Lamborghini S.p.A.
The information and procedures published below are strictly confidential and exclusively for the Lamborghini Dealer Network and Authorized Service Points. All copyrights are property of Automobili Lamborghini S.p.A based on copyright law. All of the PDF chapters in the WEB workshop manuals described below are based on information available at the time of publication. The company reserves the right to make updates and modifications. The following are prohibited: reprinting, reproduction, forwarding to unauthorized people and/or third parties, and translation, including partial, without written authorization from Automobili Lamborghini S.p.A.

The present section contains the following assembly sequences:
A) Oil pump chain
B) Oil pump

Oil pump chain

1. Assemble the chain on the oil pump crown gear and the engine pinion.
2. Assemble the oil pump (with chain) reel by tightening the relative bolt.
   Bolt attachment; tightening torque (000800-2c).
3. Insert the oil pump chain tightener and tighten the two bolts with washer (**A-Fig. 1**).

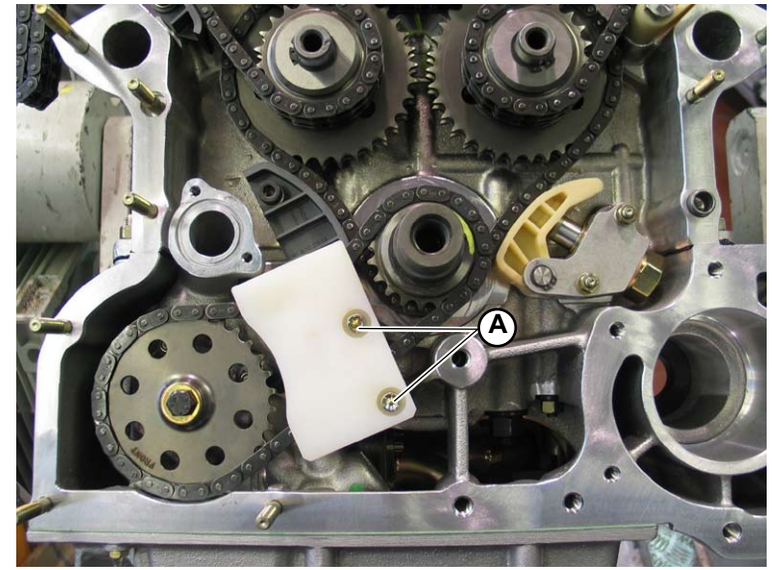

Fig.1

® Automobili Lamborghini S.p.A.
The information and procedures published below are strictly confidential and exclusively for the Lamborghini Dealer Network and Authorized Service Points. All copyrights are property of Automobili Lamborghini S.p.A based on copyright law. All of the PDF chapters in the WEB workshop manuals described below are based on information available at the time of publication. The company reserves the right to make updates and modifications. The following are prohibited: reprinting, reproduction, forwarding to unauthorized people and/or third parties, and translation, including partial, without written authorization from Automobili Lamborghini S.p.A.

B) Oil pump

1. Install the oil draft pipe on the pump inserting a new gasket (**A-Fig.2**); tighten by hand as necessary.

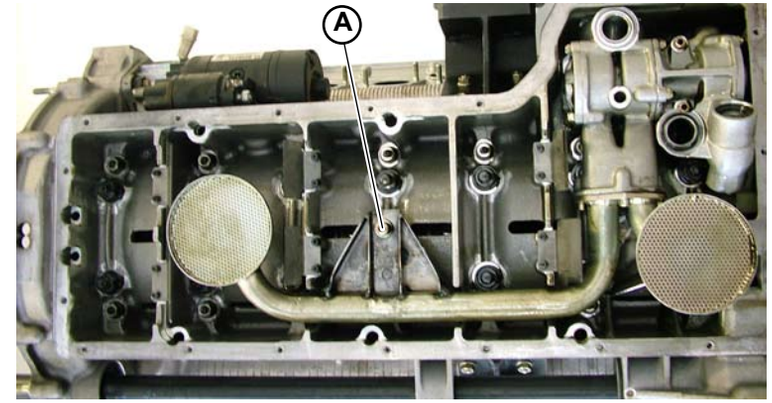

Fig.2

2. Arrange the assembly in the crankcase and tighten the draft pipe screw on the lower part of the crankcase; tighten by hand as necessary.
3. Fasten the pump by means of the 3 screws (**B-Fig.3**);
Tightening torque (000800-2d) with medium thread stop.
4. Install new O-rings on the pump delivery.

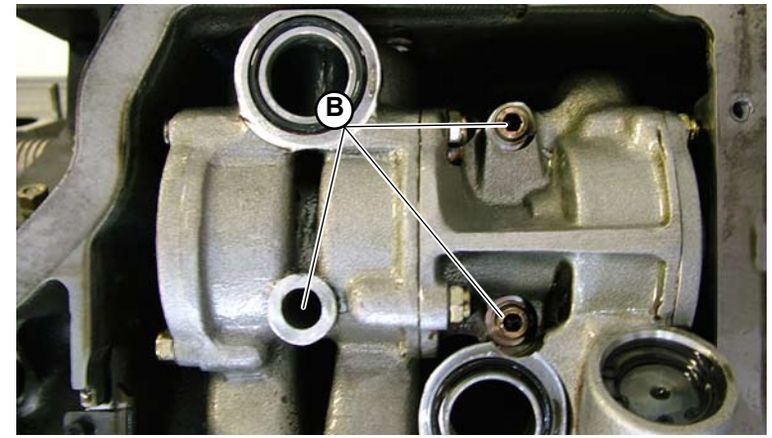

Fig.3

® Automobili Lamborghini S.p.A.
The information and procedures published below are strictly confidential and exclusively for the Lamborghini Dealer Network and Authorized Service Points. All copyrights are property of Automobili Lamborghini S.p.A based on copyright law. All of the PDF chapters in the WEB workshop manuals described below are based on information available at the time of publication. The company reserves the right to make updates and modifications. The following are prohibited: reprinting, reproduction, forwarding to unauthorized people and/or third parties, and translation, including partial, without written authorization from Automobili Lamborghini S.p.A.

The present section contains the following disassembly sequences:

A. Disassembling the variable valve timing cover

B. Disassembling the variable valve timing mechanism

A. Disassembling the variable valve timing cover

For each cover:

1. Remove the 2 solenoid valves that activate the variable valve timing mechanism (**A-Fig.1**).

2. Unscrew the 8 screws (**B-Fig.1**) of the variable valve timing cover and remove the cover (**C-Fig.1**).

NOTE
Remove the silicone from the cover's inside surface (**D-Fig.2**).

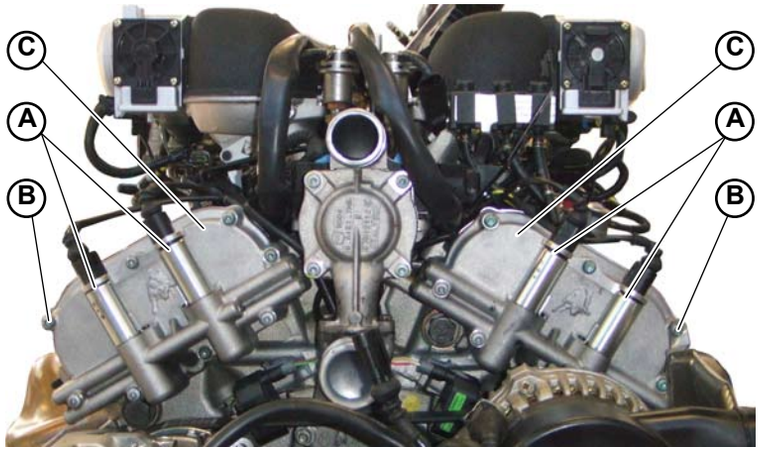

Fig.1

Fig.2

® Automobili Lamborghini S.p.A.
The information and procedures published below are strictly confidential and exclusively for the Lamborghini Dealer Network and Authorized Service Points. All copyrights are property of Automobili Lamborghini S.p.A based on copyright law. All of the PDF chapters in the WEB workshop manuals described below are based on information available at the time of publication. The company reserves the right to make updates and modifications. The following are prohibited: reprinting, reproduction, forwarding to unauthorized people and/or third parties, and translation, including partial, without written authorization from Automobili Lamborghini S.p.A.

B. Disassembling the variable valve timing mechanism

Preliminary operations

- Disassemble the intake manifold **(012903)**.
- Remove the ignition coils and the heads cover **(010303)**.
- Secure the special head timing tools **(000200-12c)** onto both camshafts **(010902)**.

Disassembly

For each cylinder bank:

1. Loosen the bolts of the variable valve timing mechanisms (**A-Fig.3**).

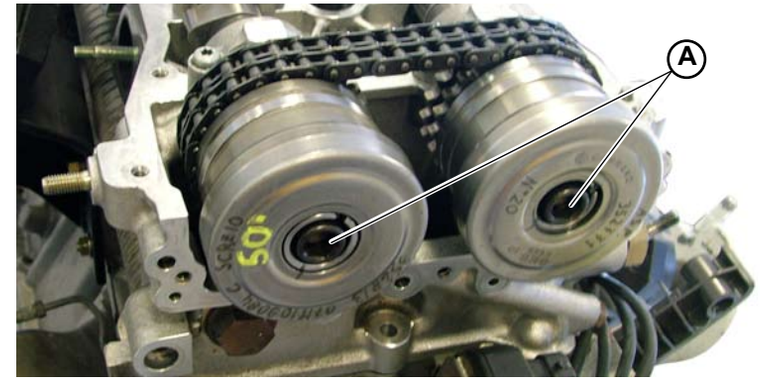

Fig.3

2. Remove the cap (**B-Fig.4**) to access and unscrew the screw (**C-Fig.4**).

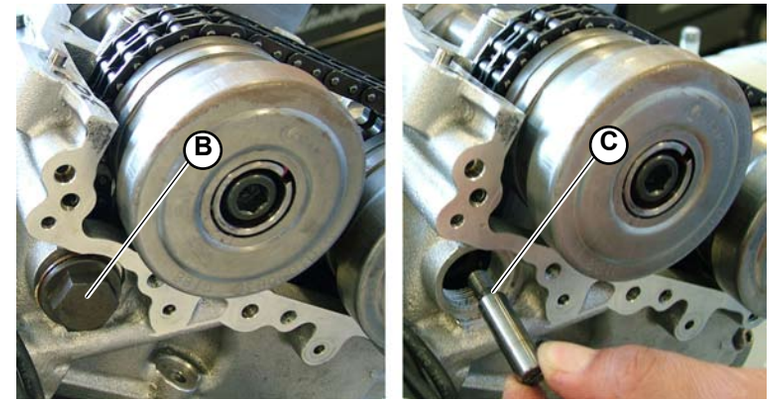

Fig.4

® Automobili Lamborghini S.p.A.
The information and procedures published below are strictly confidential and exclusively for the Lamborghini Dealer Network and Authorized Service Points. All copyrights are property of Automobili Lamborghini S.p.A based on copyright law. All of the PDF chapters in the WEB workshop manuals described below are based on information available at the time of publication. The company reserves the right to make updates and modifications. The following are prohibited: reprinting, reproduction, forwarding to unauthorized people and/or third parties, and translation, including partial, without written authorization from Automobili Lamborghini S.p.A.

3. Disassemble the hydraulic tightener (**D-Fig.5**).

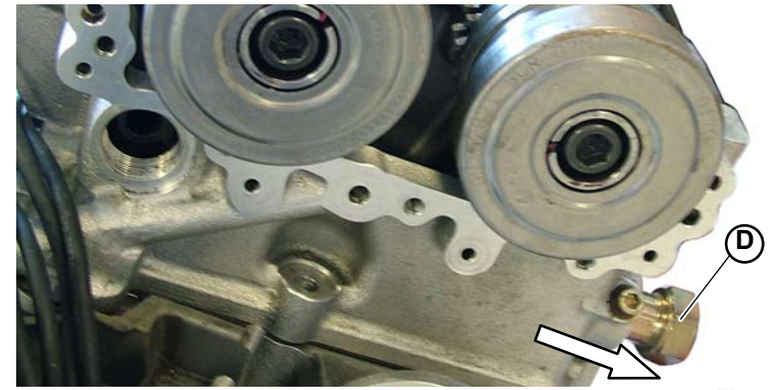

Fig.5

4. Completely unscrew the variable valve timing bolts.

5. Remove the two variable valve timing mechanisms and appropriately secure the upper timing chain (**E-Fig.6**).

NOTE
DO NOT MOVE THE ENGINE after removing the variable valve timing mechanisms.

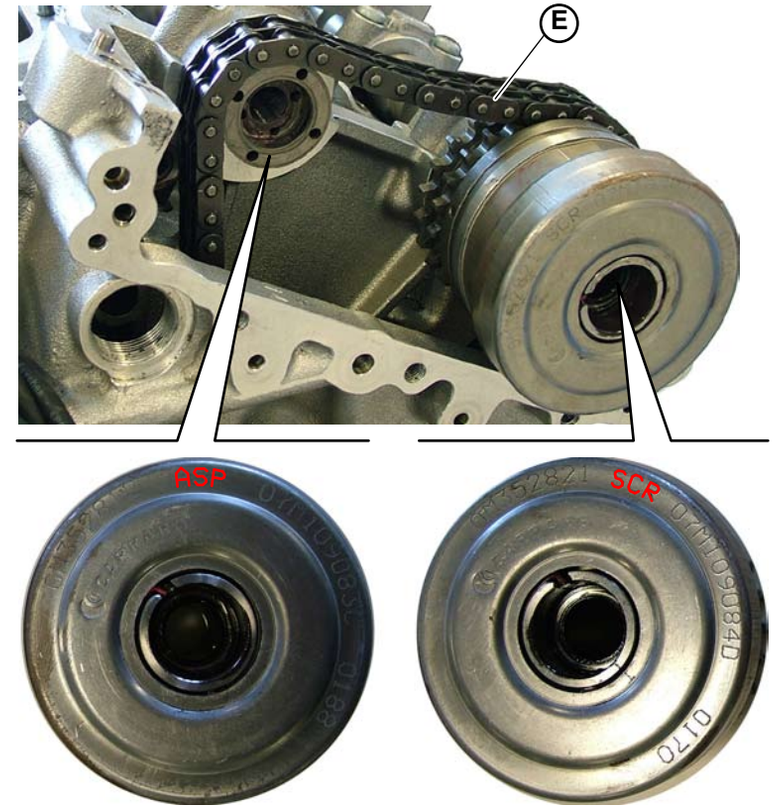

Fig.6

® Automobili Lamborghini S.p.A.
The information and procedures published below are strictly confidential and exclusively for the Lamborghini Dealer Network and Authorized Service Points. All copyrights are property of Automobili Lamborghini S.p.A based on copyright law. All of the PDF chapters in the WEB workshop manuals described below are based on information available at the time of publication. The company reserves the right to make updates and modifications. The following are prohibited: reprinting, reproduction, forwarding to unauthorized people and/or third parties, and translation, including partial, without written authorization from Automobili Lamborghini S.p.A.

The present section contains the following assembly sequences:

A. Assembling the variable valve timing cover

B. Assembling the variable valve timing mechanism

A. Assembling the variable valve timing cover

For each cover:

1. Apply silicone (**A-Fig.1**) onto the cover's inside surface.

2. Position the variable valve timing cover (**B-Fig.2**) and secure it using the 8 screws (**C-Fig.2**).

3. Secure the 2 solenoid valves that activate the variable valve timing mechanism (**D-Fig.2**).

Fig.1

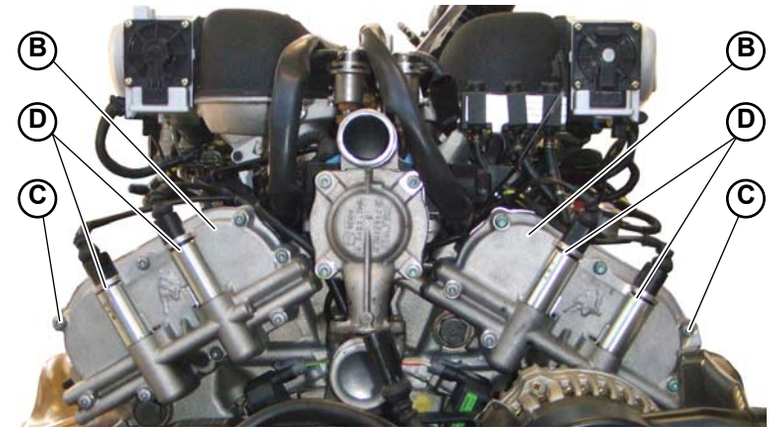

Fig.2

® Automobili Lamborghini S.p.A.
The information and procedures published below are strictly confidential and exclusively for the Lamborghini Dealer Network and Authorized Service Points. All copyrights are property of Automobili Lamborghini S.p.A based on copyright law. All of the PDF chapters in the WEB workshop manuals described below are based on information available at the time of publication. The company reserves the right to make updates and modifications. The following are prohibited: reprinting, reproduction, forwarding to unauthorized people and/or third parties, and translation, including partial, without written authorization from Automobili Lamborghini S.p.A.

B. Assembling the variable valve timing mechanism

NOTE
DO NOT MOVE THE ENGINE until the variable valve timing mechanisms have been completely assembled.

For each cylinder bank:

1. Insert the two variable valve timing mechanisms and appropriately secure the upper timing chain (**A-Fig.3**).

NOTE
Be careful to correctly assemble the intake (**B1-Fig.3**) and exhaust (**B2-Fig.3**) variable valve timing mechanisms: the position of the variable valve timing mechanism is engraved on the mechanisms themselves.

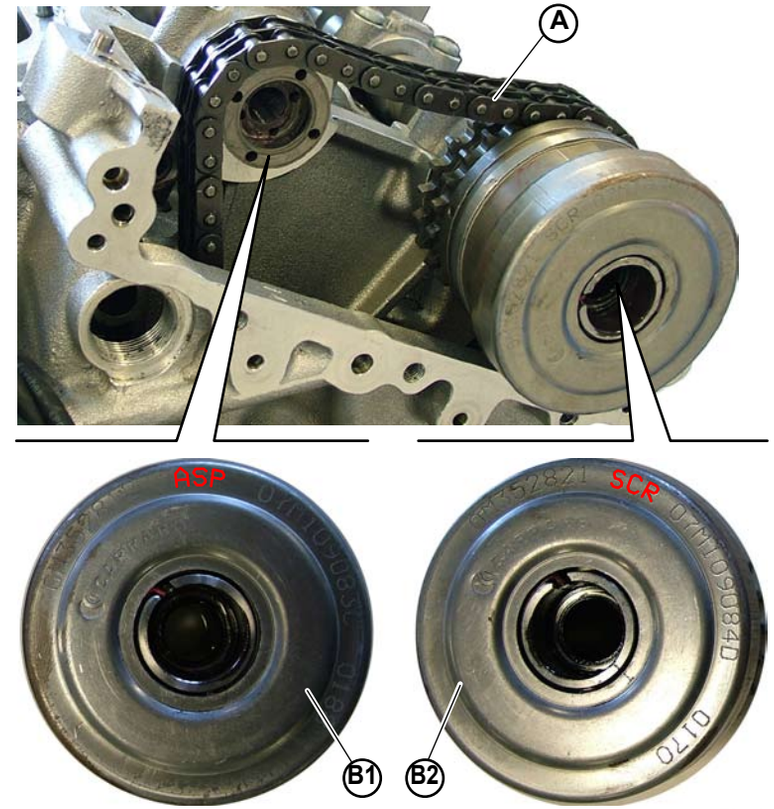

Fig.3

® Automobili Lamborghini S.p.A.
The information and procedures published below are strictly confidential and exclusively for the Lamborghini Dealer Network and Authorized Service Points. All copyrights are property of Automobili Lamborghini S.p.A based on copyright law. All of the PDF chapters in the WEB workshop manuals described below are based on information available at the time of publication. The company reserves the right to make updates and modifications. The following are prohibited: reprinting, reproduction, forwarding to unauthorized people and/or third parties, and translation, including partial, without written authorization from Automobili Lamborghini S.p.A.

2. Attach the variable valve timing bolts without tightening them completely (**C-Fig.4**).

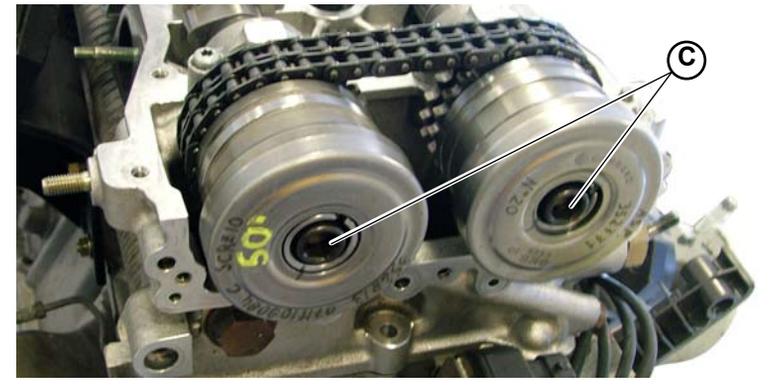

Fig.4

3. Assemble the hydraulic tightener (**D-Fig.5**).

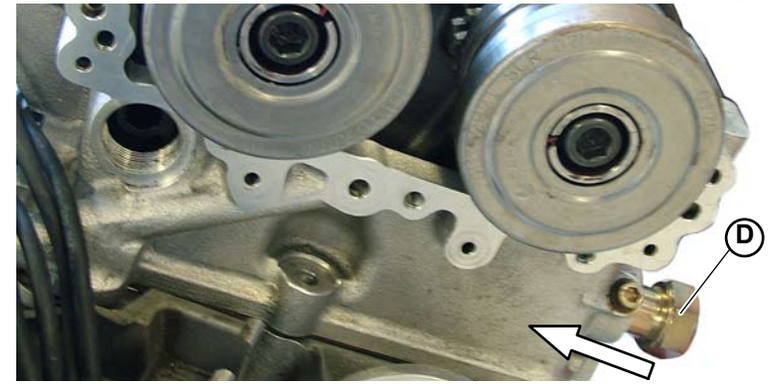

Fig.5

4. Tighten the screw (**E-Fig.6**) and reposition the cap (**F-Fig.6**).

5. Completely tighten the bolts of the two variable valve timing mechanisms (**C-Fig.4**).
Bolt attachment: **tightening torque (000800-20b).**

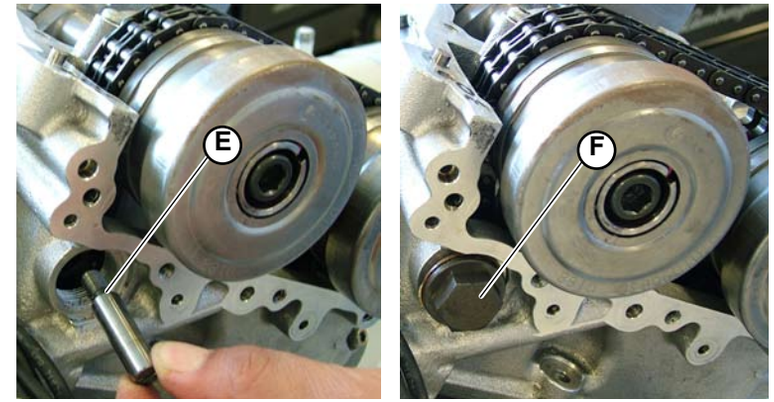

Fig.6

- Remove the special head timing tools **(000200-12c)** from the camshafts **(010902)**.
- Assemble the ignition coils and the heads cover **(010305)**.
- Assemble the intake manifold **(012905)**.

® Automobili Lamborghini S.p.A.
The information and procedures published below are strictly confidential and exclusively for the Lamborghini Dealer Network and Authorized Service Points. All copyrights are property of Automobili Lamborghini S.p.A based on copyright law. All of the PDF chapters in the WEB workshop manuals described below are based on information available at the time of publication. The company reserves the right to make updates and modifications. The following are prohibited: reprinting, reproduction, forwarding to unauthorized people and/or third parties, and translation, including partial, without written authorization from Automobili Lamborghini S.p.A.

Oil cooler

Dry pan lubrication with gear pump in the crankcase controlled by independent chain. Oil cooling radiator. The pump is equipped with a pressure
regulator. Oil vapors from head and oil tank re-cycling.

A.	Tank
B.	Oil dipstick
C.	Oil vapors from RH head
D.	Oil vapors from LH head
E.	Oil filter
F.	Pressure regulator
G.	Oil pump
H.	Pan-radiator pipe
I.	Oil radiator
L.	Oil tank drain plug
M.	Oil temperature sensor
N.	Sieve filter
O.	Tank-pan pipe
P.	Oil vapors to LH manifold re-cycling
Q.	Oil vapors to LH air filter re-cycling
R.	Tank-radiator pipe
S.	Oil pan
T.	Oil aspirator

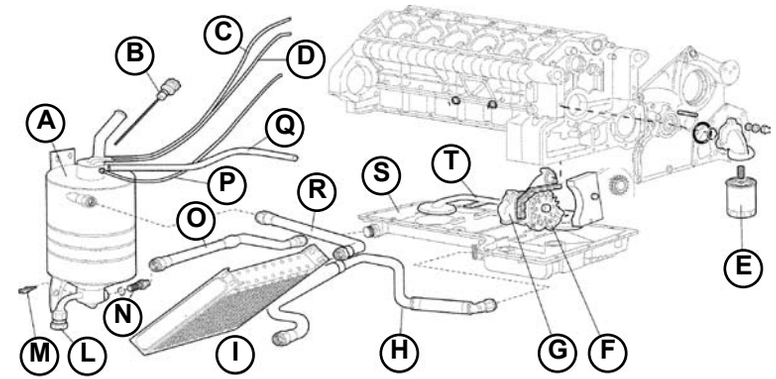

Fig.1

® Automobili Lamborghini S.p.A.
The information and procedures published below are strictly confidential and exclusively for the Lamborghini Dealer Network and Authorized Service Points. All copyrights are property of Automobili Lamborghini S.p.A based on copyright law. All of the PDF chapters in the WEB workshop manuals described below are based on information available at the time of publication. The company reserves the right to make updates and modifications. The following are prohibited: reprinting, reproduction, forwarding to unauthorized people and/or third parties, and translation, including partial, without written authorization from Automobili Lamborghini S.p.A.

Circuit	Dry pan lubrication system with radiator and pressure regulator
Oil pump	Integrated in the crankcase and controlled by independent chain
Oil radiator	Single, separate
Circuit pressure with hot engine (90°C)	
– at 1,000 RPM	1.5 – 2.5 [bars]
– at 6,000 RPM	5 – 7 [bars]

® Automobili Lamborghini S.p.A.
The information and procedures published below are strictly confidential and exclusively for the Lamborghini Dealer Network and Authorized Service Points. All copyrights are property of Automobili Lamborghini S.p.A based on copyright law. All of the PDF chapters in the WEB workshop manuals described below are based on information available at the time of publication. The company reserves the right to make updates and modifications. The following are prohibited: reprinting, reproduction, forwarding to unauthorized people and/or third parties, and translation, including partial, without written authorization from Automobili Lamborghini S.p.A.

Recycling System For Gas Coming From The Crankcase (Blow-by)

The system checks the crankcase gas emissions which are a mixture of air, fuel vapors and exhaust gas that seep out from the piston rings, and
lubrication oil vapors which are sucked back and burnt by the engine.
The gas emissions rise from the crankcase to the cylinder head, are conveyed in ducts to the upper cylinder of the engine oil tank (1). This cylinder
contains an oil vapor separator; the condensed liquid part falls in the tank; the vapors are suctioned:

- In the left intake manifold when the engine is running with low load;
- Upstream of the air filter when the engine is running with high load.

Oil vapor recirculation (Fig.2)	
A.	Engine oil tank
B.	Oil vapor output pipes from the right cylinder head
C.	Oil vapor output pipes from the left cylinder head
D.	Vapor suction pipe to left manifold
E.	Air filter
F.	Vapor suction pipe to left air filter
G.	Oil vapor separator

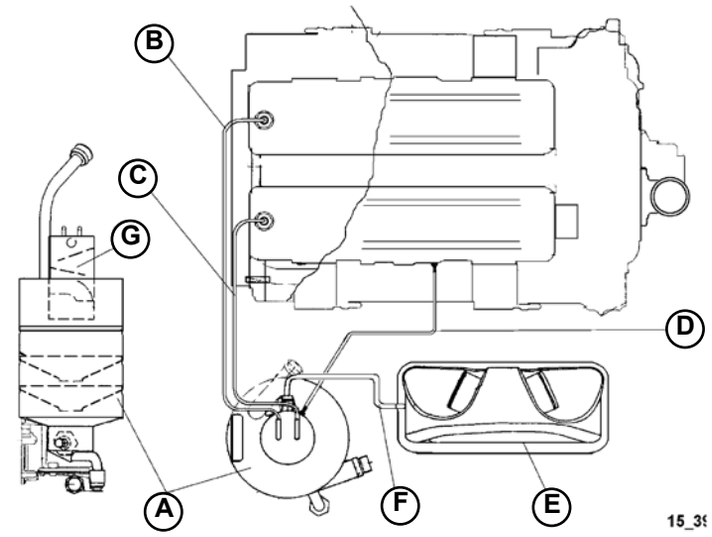

Fig.2

® Automobili Lamborghini S.p.A.
The information and procedures published below are strictly confidential and exclusively for the Lamborghini Dealer Network and Authorized Service Points. All copyrights are property of Automobili Lamborghini S.p.A based on copyright law. All of the PDF chapters in the WEB workshop manuals described below are based on information available at the time of publication. The company reserves the right to make updates and modifications. The following are prohibited: reprinting, reproduction, forwarding to unauthorized people and/or third parties, and translation, including partial, without written authorization from Automobili Lamborghini S.p.A.

Oil radiator disassembly

Preliminary operations

- Lift the vehicle on car lift **(000000)**.
- Disassemble the left rear tire **(060103)**.
- Disassemble the wheel arch **(082103)**.
- Disassemble the air conveyor of the left side member **(085303)**.
- Disconnect and disassemble the battery **(091503)**.

STOP **Observe the relative safety warnings during battery disassembly.**

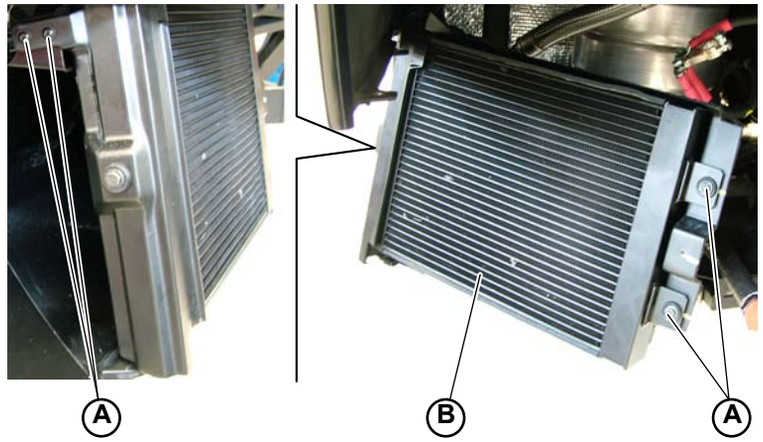

Fig.1

Oil radiator disassembly

1. Proceed by draining the oil from the tank using the accumulator's screw **(011707)**.
2. Unscrew the mouth of the pipes on the oil radiator (lower and upper).
3. Unscrew the 4 lower screws (**A-Fig.1**) that secure the radiator (**B-Fig.1**).
4. Remove the oil radiator.

® Automobili Lamborghini S.p.A.
The information and procedures published below are strictly confidential and exclusively for the Lamborghini Dealer Network and Authorized Service Points. All copyrights are property of Automobili Lamborghini S.p.A based on copyright law. All of the PDF chapters in the WEB workshop manuals described below are based on information available at the time of publication. The company reserves the right to make updates and modifications. The following are prohibited: reprinting, reproduction, forwarding to unauthorized people and/or third parties, and translation, including partial, without written authorization from Automobili Lamborghini S.p.A.

Sieve filter cleaning (in the oil tank)

STOP

Engine oil must be previously and completely drained.
The filter replacement must be cleaned every 3-4 oil changes and anyway always after the engine oil has been contaminated by foreign fluids and/or materials.

- Remove LH rear wheel.
- Remove LH rear fender apron front part.
- Remove the battery.
- Disconnect the hose (**B-Fig.2**) from the sieve filter (**C-Fig.2**).
- Remove the sieve filter (**C-Fig.2**) and clean it by means of solvent and compressed air.

Fig.1

- Install the sieve filter in the oil tank (**A-Fig.2**) inserting a new copper washer (**D-Fig.2**): tighten by hand as necessary.

- Clean the hose (**B-Fig.2**) coupling gasket and then connect it to the sieve filter (**C-Fig.2**) tightening it by hand as necessary.

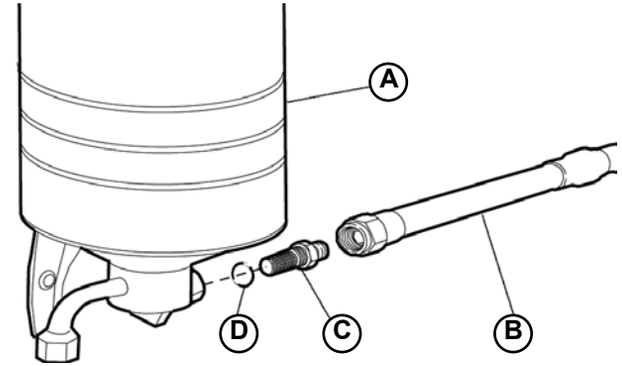

Fig.2

® Automobili Lamborghini S.p.A.
The information and procedures published below are strictly confidential and exclusively for the Lamborghini Dealer Network and Authorized Service Points. All copyrights are property of Automobili Lamborghini S.p.A based on copyright law. All of the PDF chapters in the WEB workshop manuals described below are based on information available at the time of publication. The company reserves the right to make updates and modifications. The following are prohibited: reprinting, reproduction, forwarding to unauthorized people and/or third parties, and translation, including partial, without written authorization from Automobili Lamborghini S.p.A.

Oil radiator assembly

1. Attach the radiator (**A-Fig.1**) using the 4 screws (**B-Fig.1**).

2. Tighten the mouth of the pipes on the oil radiator (lower and upper).
   Pipes tightening: **tightening torque (000800-31a).**

3. Proceed by filling the oil tank **(011708)**.

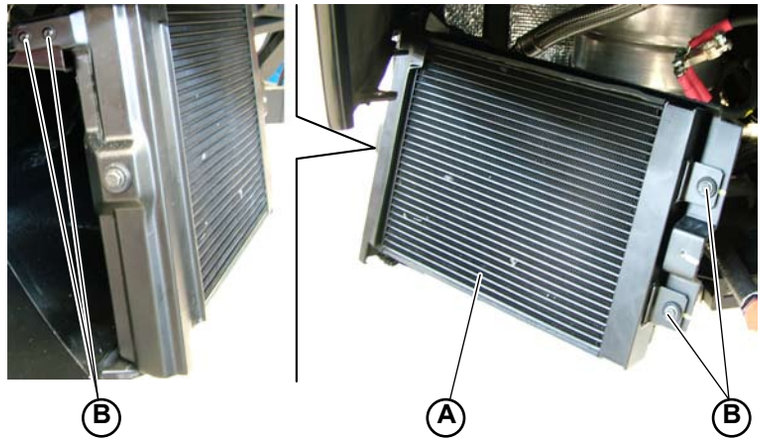

Fig.1

- Connect and reassemble the battery **(091505)**.
- Assemble the air conveyor of the left side member **(085305)**.
- Assemble the wheel arch **(082105)**.
- Assemble the left rear tire **(060105)**.

Observe the relative safety warnings during battery assembly.

® Automobili Lamborghini S.p.A.
The information and procedures published below are strictly confidential and exclusively for the Lamborghini Dealer Network and Authorized Service Points. All copyrights are property of Automobili Lamborghini S.p.A based on copyright law. All of the PDF chapters in the WEB workshop manuals described below are based on information available at the time of publication. The company reserves the right to make updates and modifications. The following are prohibited: reprinting, reproduction, forwarding to unauthorized people and/or third parties, and translation, including partial, without written authorization from Automobili Lamborghini S.p.A.

Replacing the engine oil

1. Lift the vehicle on the car lift **(000000)**.
2. When the engine is hot (oil temperature > 70°C), unscrew the plug (**A-Fig.1**) and allow the oil to drain out of the oil tank drain hole: then clean the plug and tighten it. **Torque (000800-19d/19e)**.
3. Unscrew the two plugs (**B-Fig.2**) on the oil pan and allow the oil left in the engine to drain out: then clean the plugs and tighten them.

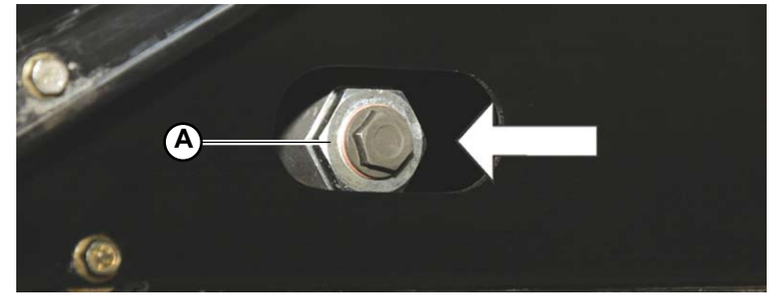

Fig.1

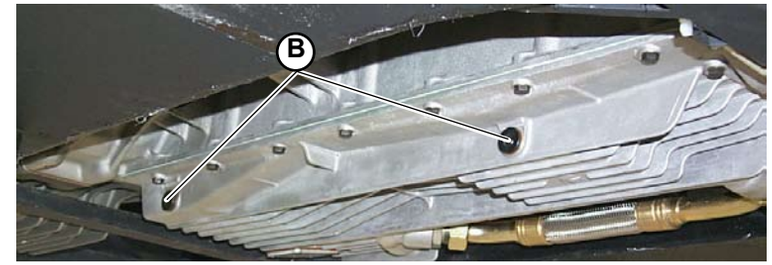

Fig.2

® Automobili Lamborghini S.p.A.
The information and procedures published below are strictly confidential and exclusively for the Lamborghini Dealer Network and Authorized Service Points. All copyrights are property of Automobili Lamborghini S.p.A based on copyright law. All of the PDF chapters in the WEB workshop manuals described below are based on information available at the time of publication. The company reserves the right to make updates and modifications. The following are prohibited: reprinting, reproduction, forwarding to unauthorized people and/or third parties, and translation, including partial, without written authorization from Automobili Lamborghini S.p.A.

TOPPING UP THE ENGINE OIL

STOP When adding oil do not allow it to come into contact with hot engine parts. Fire hazard!

The oil level check must be carried out when the motor is hot, with an oil temperature between 70 and 90°C.

1) Bring the engine to idle speed and keep it there for 5 minutes to avoid every strategy that can bring the engine to run higher after a start up.
2) Be sure that the engine runs to the nominal idle speed (960 rpm ± 50 rpm) and keep it there for 60 seconds.
3) Turn off the engine.
4) Check the oil level within 30 seconds after turning off the engine.

The level must be between (± 5 mm) the MIN and MAX marks on the dipstick (**A-Fig.1**).

STOP Important!

- **The difference in the amount of oil between the level corresponding to the MIN and MAX marks is about 1.4 liters.**
- **The oil level should be topped up using the same brand and type of oil as the oil contained in the oil pan. If this is not possible, be sure to use an oil with equivalent specifications (000300).**

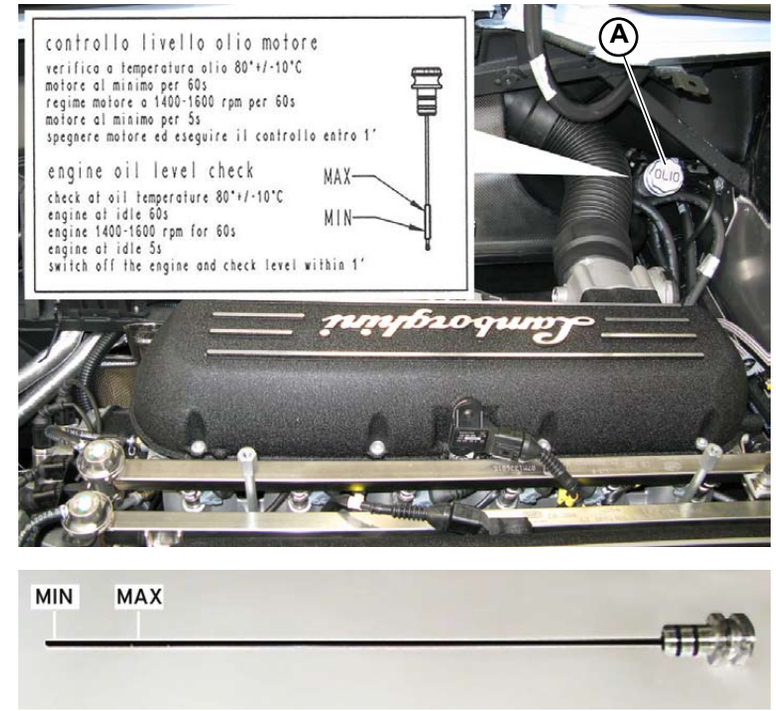

Fig.1

® Automobili Lamborghini S.p.A.
The information and procedures published below are strictly confidential and exclusively for the Lamborghini Dealer Network and Authorized Service Points. All copyrights are property of Automobili Lamborghini S.p.A based on copyright law. All of the PDF chapters in the WEB workshop manuals described below are based on information available at the time of publication. The company reserves the right to make updates and modifications. The following are prohibited: reprinting, reproduction, forwarding to unauthorized people and/or third parties, and translation, including partial, without written authorization from Automobili Lamborghini S.p.A.

FILLING

The total amount of oil to be placed in the engine is:

- 13.5 liters ± 0,5 liters if the oil filter is also replaced;
- 13 liters ± 0,5 liters if the oil filter is not replaced;

1. Remove the dipstick cap on the oil tank (**A-Fig.2**): fill with 9 liters of oil and replace the cap.
2. Start the engine and let it run at idle speed for 60 seconds.
3. Turn off the engine and add the remaining 4.5 liters (4 liters if the oil filter is not replaced).
4. Start the engine at idle speed, wait for the oil pressure light to go off and then warm up the engine (engine oil temperature above 70°C).
5. Check the oil level using the specified procedure. If the established oil level was not reached, add or remove oil and repeat point 4 to achieve the required level.

Fig.2

STOP **Important!**
If the cartridge oil filter is replaced, check that there are no leaks from the gasket on the body of the filter's support (the filter's rubber surface must be lubricated with engine oil before tightening it by hand).

® Automobili Lamborghini S.p.A.
The information and procedures published below are strictly confidential and exclusively for the Lamborghini Dealer Network and Authorized Service Points. All copyrights are property of Automobili Lamborghini S.p.A based on copyright law. All of the PDF chapters in the WEB workshop manuals described below are based on information available at the time of publication. The company reserves the right to make updates and modifications. The following are prohibited: reprinting, reproduction, forwarding to unauthorized people and/or third parties, and translation, including partial, without written authorization from Automobili Lamborghini S.p.A.

Closed loop cooling system with forced circulation by crankshaft belt-driven centrifugal pump. Thermostatic valve and double rear radiator.

A.	Climate control system
B.	Minimum flow rate solenoid valve
C.	Minimum flow rate pump
D.	Water outlet from heads
E.	Radiator expansion tank
F.	Bleed from heads
G.	Breather pipe from radiator
H.	Manifold filling-up from radiators
I.	RH radiator
L.	Manifold pipe from radiators
M.	LH radiator
N.	Tank bleed manifold
O.	Manifold pipe to radiators
P.	Belt tensioner
Q.	Water pump belt
R.	Water pump pulley
S.	Water pump O-ring
T.	Water pump
U.	Water manifold from heads
V.	Water temperature sensor
Z.	Thermostatic valve
X.	Thermostatic valve body

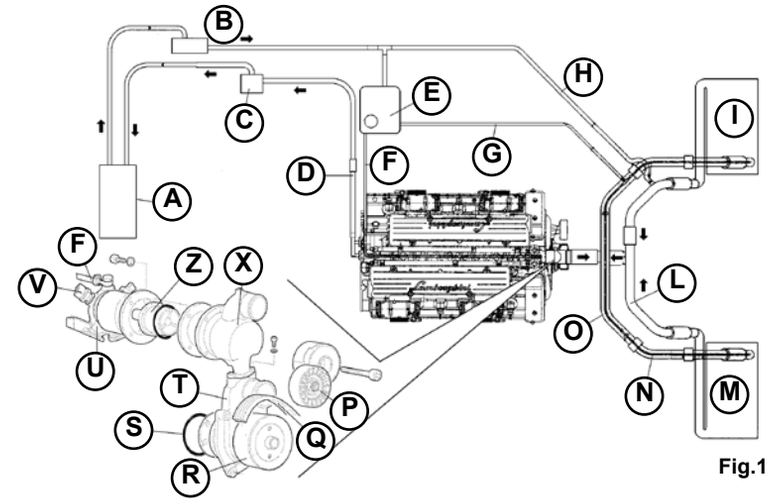

Fig.1

® Automobili Lamborghini S.p.A.
The information and procedures published below are strictly confidential and exclusively for the Lamborghini Dealer Network and Authorized Service Points. All copyrights are property of Automobili Lamborghini S.p.A based on copyright law. All of the PDF chapters in the WEB workshop manuals described below are based on information available at the time of publication. The company reserves the right to make updates and modifications. The following are prohibited: reprinting, reproduction, forwarding to unauthorized people and/or third parties, and translation, including partial, without written authorization from Automobili Lamborghini S.p.A.

Circuit	Forced circulation with thermostatic control
Radiators	Two with fan
Fans • on • off	 80 °C 74 °C
Circuit pressure with hot engine (max.)	1.2 [bars]
Thermostatic valve • Opening start	 75 ± 2 °C

CAUTION!

Before carrying out any work on the water cooling system, wait for the system to completely cool down: danger of burns due to boiling fluids.

® Automobili Lamborghini S.p.A.
The information and procedures published below are strictly confidential and exclusively for the Lamborghini Dealer Network and Authorized Service Points. All copyrights are property of Automobili Lamborghini S.p.A based on copyright law. All of the PDF chapters in the WEB workshop manuals described below are based on information available at the time of publication. The company reserves the right to make updates and modifications. The following are prohibited: reprinting, reproduction, forwarding to unauthorized people and/or third parties, and translation, including partial, without written authorization from Automobili Lamborghini S.p.A.

Water cooling circuit check

CAUTION!

Before carrying out any work on the water cooling system, wait for the system to completely cool down: danger of burns due to boiling fluids.

1. Unscrew radiator expansion tank plug.
2. Make sure that the engine coolant level matches the mark visible through the plug. If necessary, top up with the prescribed coolant.
3. Tighten radiator expansion tank plug.

Coolant:	**(000300)**

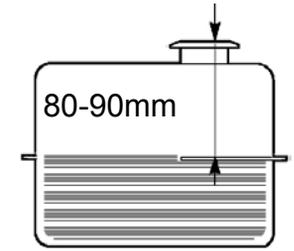

Fig.1

® Automobili Lamborghini S.p.A.
The information and procedures published below are strictly confidential and exclusively for the Lamborghini Dealer Network and Authorized Service Points. All copyrights are property of Automobili Lamborghini S.p.A based on copyright law. All of the PDF chapters in the WEB workshop manuals described below are based on information available at the time of publication. The company reserves the right to make updates and modifications. The following are prohibited: reprinting, reproduction, forwarding to unauthorized people and/or third parties, and translation, including partial, without written authorization from Automobili Lamborghini S.p.A.

Thermostatic valve disassembly

CAUTION!

Before carrying out any work on the water cooling system, wait for the system to completely cool down: danger of burns due to boiling fluids.

NOTE
The thermostatic valve disassembly/assembly is possible when the power train is on board; in that case, protect the parts under the thermostat by means of a cloth and position a container under the vehicle to collect the coolant.

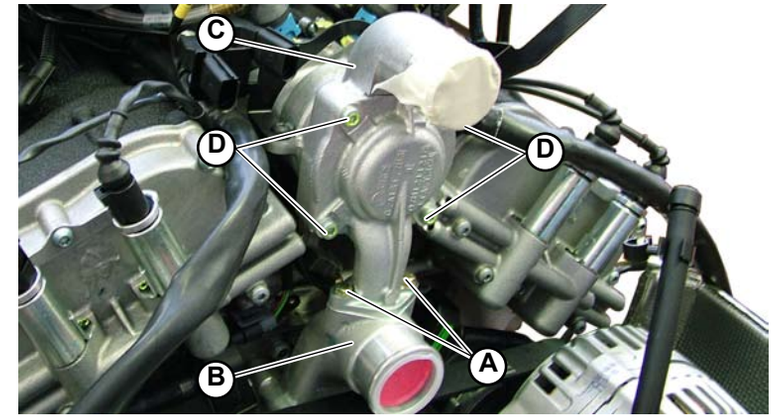

Fig.1

Preliminary operations

- Proceed by draining the water cooling system **(012107)**.

Valve disassembly

1. Remove the 2 screws (**A-Fig.1**) with washers which lock the thermostat (**B-Fig.1**)on to the water pump (**C-Fig.1**).
2. Remove the 4 screws (**D-Fig.1**) and remove the cover.
3. Take the thermostatic valve (**E-Fig.2**) out.

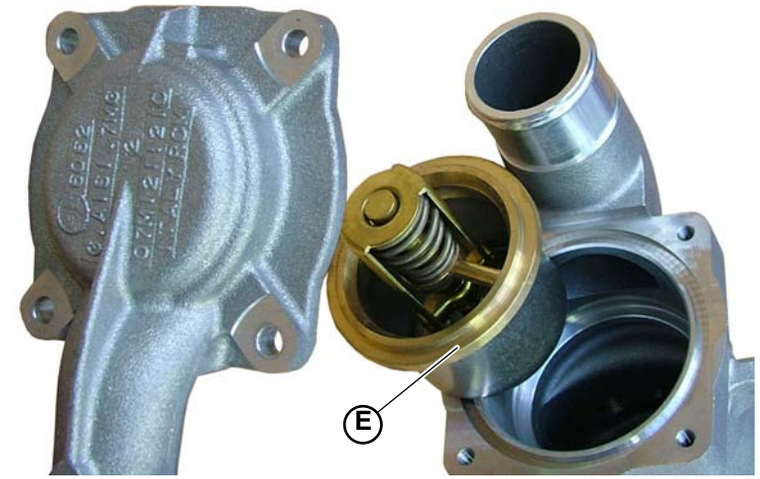

Fig.2

® Automobili Lamborghini S.p.A.
The information and procedures published below are strictly confidential and exclusively for the Lamborghini Dealer Network and Authorized Service Points. All copyrights are property of Automobili Lamborghini S.p.A based on copyright law. All of the PDF chapters in the WEB workshop manuals described below are based on information available at the time of publication. The company reserves the right to make updates and modifications. The following are prohibited: reprinting, reproduction, forwarding to unauthorized people and/or third parties, and translation, including partial, without written authorization from Automobili Lamborghini S.p.A.

Thermostatic valve assembly

CAUTION!

Before carrying out any work on the water cooling system, wait for the system to completely cool down: danger of burns due to boiling fluids.

NOTE
The thermostatic valve re-assembly is possible when the power train is on board; in that case, protect the parts under the thermostat by means of a cloth and position a container under the vehicle to collect the coolant.

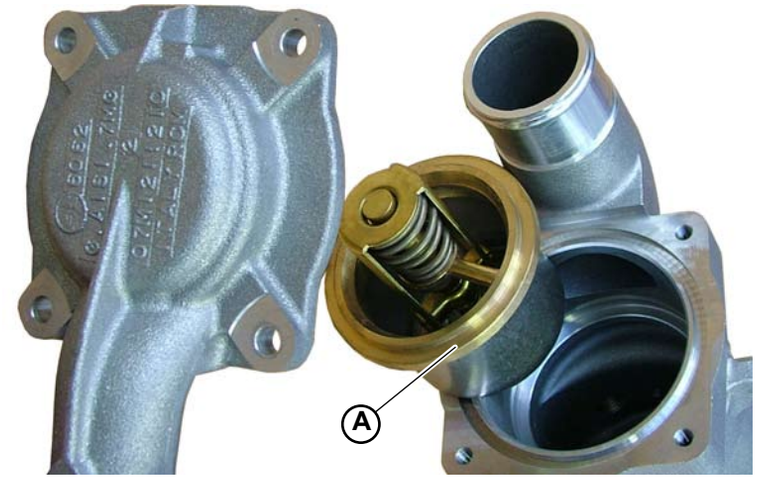

Fig.1

1. Fit the thermostatic valve (**A-Fig.1**).
2. Tighten the thermostat cover screwing the 4 screws (**B-Fig.2**).
3. Screw the 2 screws (**C-Fig.2**) with washers which mount the thermostat (**D-Fig.2**) to the water pump (**E-Fig.2**).

- Proceed by filling the water cooling system **(012106)**.

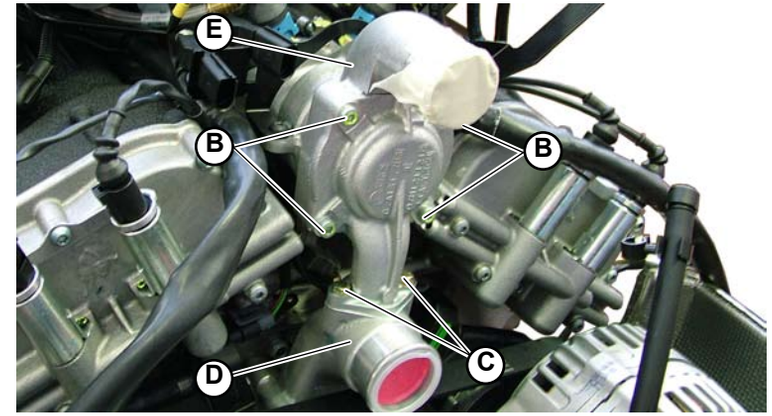

Fig.2

® Automobili Lamborghini S.p.A.
The information and procedures published below are strictly confidential and exclusively for the Lamborghini Dealer Network and Authorized Service Points. All copyrights are property of Automobili Lamborghini S.p.A based on copyright law. All of the PDF chapters in the WEB workshop manuals described below are based on information available at the time of publication. The company reserves the right to make updates and modifications. The following are prohibited: reprinting, reproduction, forwarding to unauthorized people and/or third parties, and translation, including partial, without written authorization from Automobili Lamborghini S.p.A.

The water cooling system bleeding

1. Unscrew and remove the cap (**A-Fig. 1**)
2. Top up the reservoir (**B-Fig. 1**) to the level mark.
3. Start the vehicle and bring the water temperature to 90/95°C (thermostatic valve completely open).
4. Because the system is fully circulating, all of the air is conveyed into the reservoir (**B-Fig. 1**) and exits the mouth that was purposely left open.

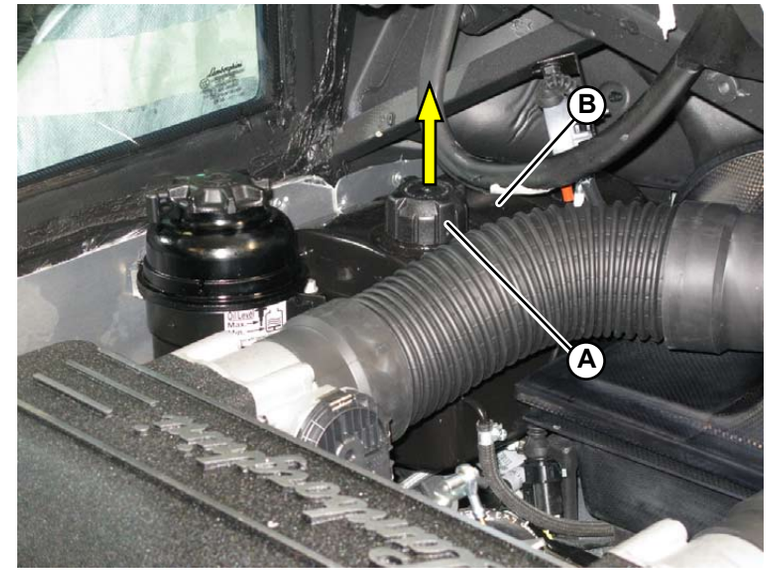

Fig.1

CAUTION!

During these operations be aware of high temperatures: Risk of burning.

Bleeding can last from 15 to 60 minutes.

5. After bleeding, screw the cap on again (**A-Fig. 1**).

® Automobili Lamborghini S.p.A.
The information and procedures published below are strictly confidential and exclusively for the Lamborghini Dealer Network and Authorized Service Points. All copyrights are property of Automobili Lamborghini S.p.A based on copyright law. All of the PDF chapters in the WEB workshop manuals described below are based on information available at the time of publication. The company reserves the right to make updates and modifications. The following are prohibited: reprinting, reproduction, forwarding to unauthorized people and/or third parties, and translation, including partial, without written authorization from Automobili Lamborghini S.p.A.

Replacing the engine coolant

CAUTION!

Before carrying out any work on the water cooling system, wait for the system to completely cool down: danger of burns due to boiling fluids.

1. Place a container under the vehicle in order to collect all the engine coolant.
2. Open the radiator expansion tank plug.
3. Disconnect water pump inlet and outlet hoses and allow the coolant to drain out.
4. Unscrew the taps placed under the radiators and accessible when the rear aprons are removed in order to empty the rear radiators.
5. Connect all the removed parts, close the open taps; top up with the prescribed coolant through the radiator expansion tank plug.

Coolant:	**(000300)**

6. Start the engine and run it at idle speed for some minutes leaving the radiator expansion tank plug open; stop the engine and check the coolant level through the radiator expansion tank plug; top up with coolant if necessary.
7. Then tighten the radiator expansion tank plug.

® Automobili Lamborghini S.p.A.
The information and procedures published below are strictly confidential and exclusively for the Lamborghini Dealer Network and Authorized Service Points. All copyrights are property of Automobili Lamborghini S.p.A based on copyright law. All of the PDF chapters in the WEB workshop manuals described below are based on information available at the time of publication. The company reserves the right to make updates and modifications. The following are prohibited: reprinting, reproduction, forwarding to unauthorized people and/or third parties, and translation, including partial, without written authorization from Automobili Lamborghini S.p.A.

Water pump disassembly

NOTE
The water pump disassembly/assembly is possible when the power train is on board; in that case, protect the parts under the pump by means of a cloth and position a container under the vehicle to collect the coolant.

Preliminary operations

- Disassemble the silencer safety grid **(025103)**.

Pump disassembly

1. Remove the delivery (**A-Fig.1**) and intake pipe mounting clamps on the water pump and remove the pipes (**B-Fig.1**).

2. Remove the rear cross member, unscrewing the 4 screws (**C-Fig.2**) of the two inner sides.

3. Remove the auxiliary belt **(010103)**.

4. Remove the 2 screws (**D-Fig.3**) that connect the water pump and the power steering pump.

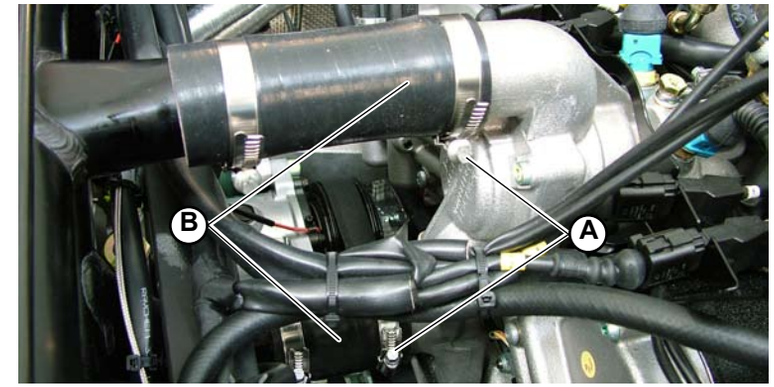

Fig.1

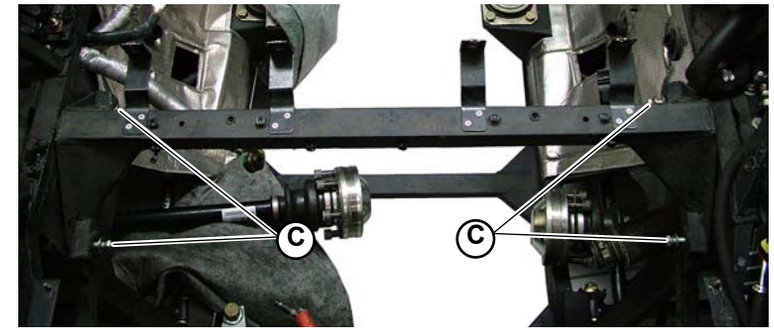

Fig.2

Fig.3

® Automobili Lamborghini S.p.A.
The information and procedures published below are strictly confidential and exclusively for the Lamborghini Dealer Network and Authorized Service Points. All copyrights are property of Automobili Lamborghini S.p.A based on copyright law. All of the PDF chapters in the WEB workshop manuals described below are based on information available at the time of publication. The company reserves the right to make updates and modifications. The following are prohibited: reprinting, reproduction, forwarding to unauthorized people and/or third parties, and translation, including partial, without written authorization from Automobili Lamborghini S.p.A.

5. Unscrew the 4 screws (**E-Fig.4**) that secure the power steering pump support frame (**F-Fig.4**), A/C compressor and alternator.

NOTE
Drain the air conditioning system **(026008)**.

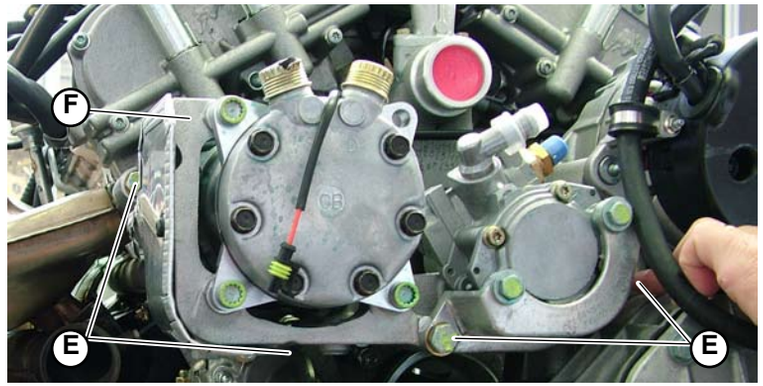

Fig.4

6. Remove the 4 upper screws (**G-Fig.5**) and the 2 lower screws (**H-Fig.5**) that secure the thermostatic valve cover.

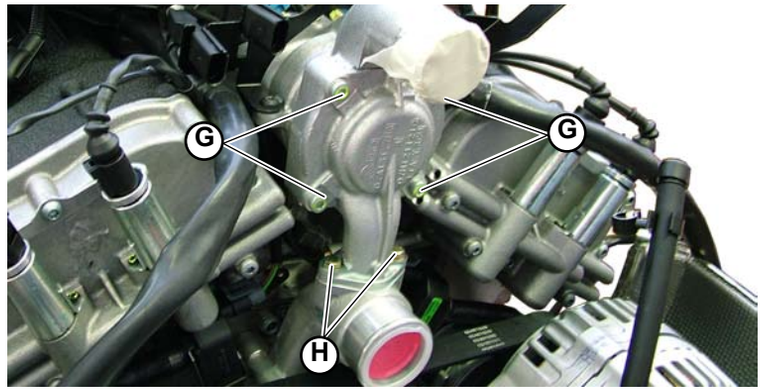

Fig.5

7. Remove the 3 nuts (**I-Fig.6**) that secure the water pump to the timing system cover.

8. Remove the water pump.

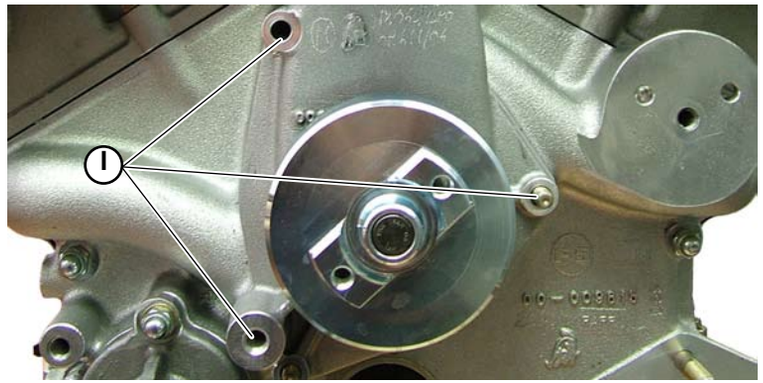

Fig.6

® Automobili Lamborghini S.p.A.
The information and procedures published below are strictly confidential and exclusively for the Lamborghini Dealer Network and Authorized Service Points. All copyrights are property of Automobili Lamborghini S.p.A based on copyright law. All of the PDF chapters in the WEB workshop manuals described below are based on information available at the time of publication. The company reserves the right to make updates and modifications. The following are prohibited: reprinting, reproduction, forwarding to unauthorized people and/or third parties, and translation, including partial, without written authorization from Automobili Lamborghini S.p.A.

Water pump assembly

1. Position the water pump with a new gasket.

2. Tighten the 3 nuts (**A-Fig.1**), securing the water pump to the timing system cover.

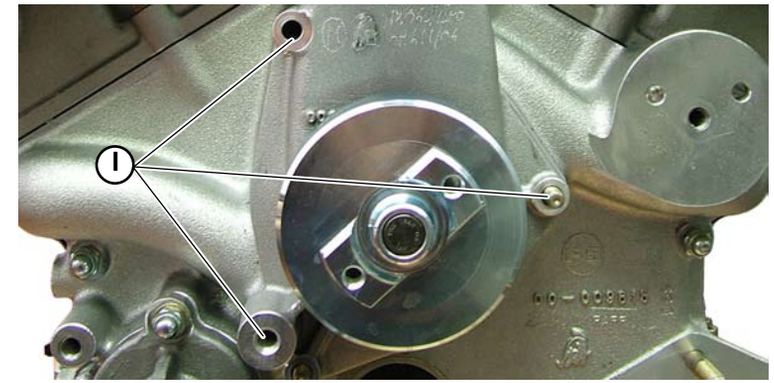

Fig.1

3. Position the thermostatic valve cover and secure it by tightening the 4 upper screws (**B-Fig.2**) and the 2 lower screws (**C-Fig.2**).

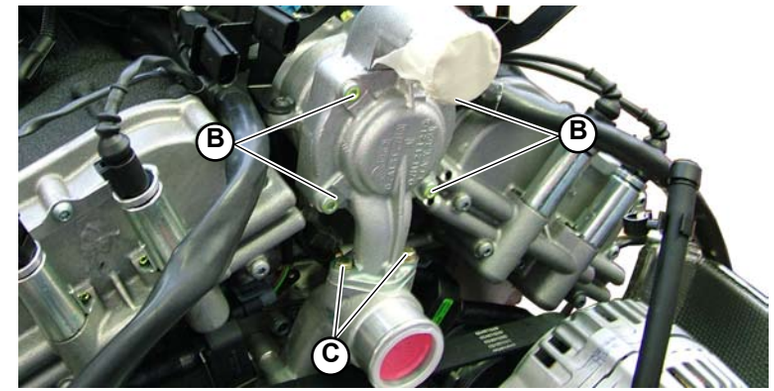

Fig.2

4. Tighten the 4 screws (**D-Fig.3**) that secure the power steering pump support frame (**E-Fig.3**), A/C compressor and alternator.
   Screw attachment: **tightening torque (000800-6d)**.

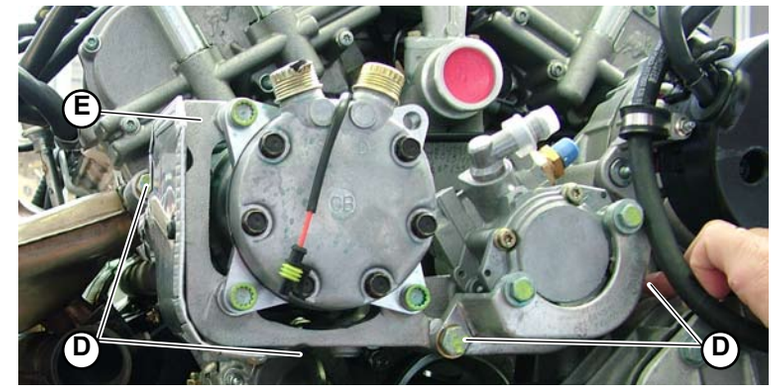

Fig.3

® Automobili Lamborghini S.p.A.
The information and procedures published below are strictly confidential and exclusively for the Lamborghini Dealer Network and Authorized Service Points. All copyrights are property of Automobili Lamborghini S.p.A based on copyright law. All of the PDF chapters in the WEB workshop manuals described below are based on information available at the time of publication. The company reserves the right to make updates and modifications. The following are prohibited: reprinting, reproduction, forwarding to unauthorized people and/or third parties, and translation, including partial, without written authorization from Automobili Lamborghini S.p.A.

5. Tighten the 2 screws (**F-Fig.4**) that connect the water pump and the power steering pump.

6. Assemble the auxiliary belt **(010102)**.

NOTE
Check that the tension of the auxiliary belt is correct **(010102)**.

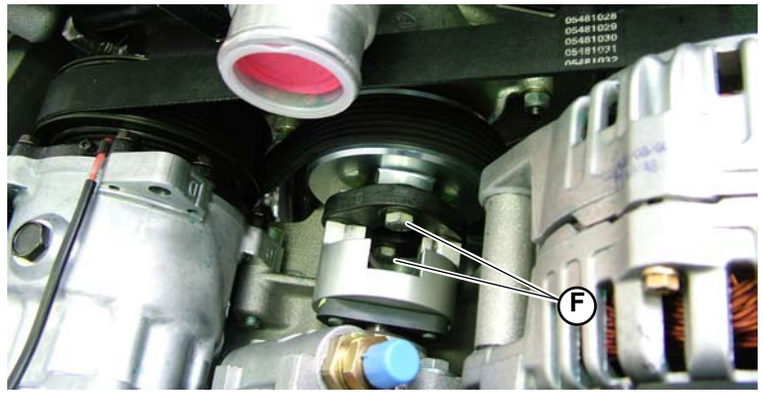

Fig.4

7. Assemble the rear cross member, tightening the 4 screws onto the two inner sides (**G-Fig.5**).

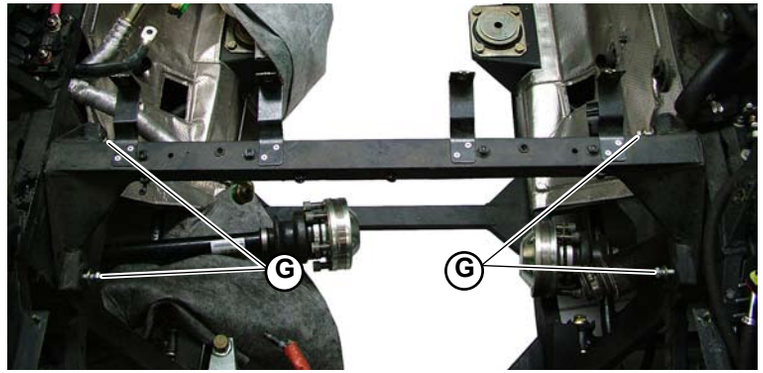

Fig.5

8. Reconnect the water pump delivery and intake pipes (**H-Fig.6**), securing them with the clamps (**I-Fig.6**).

NOTE
Top up the coolant **(026008)**.

- Assemble the silencer safety grid **(025105)**.

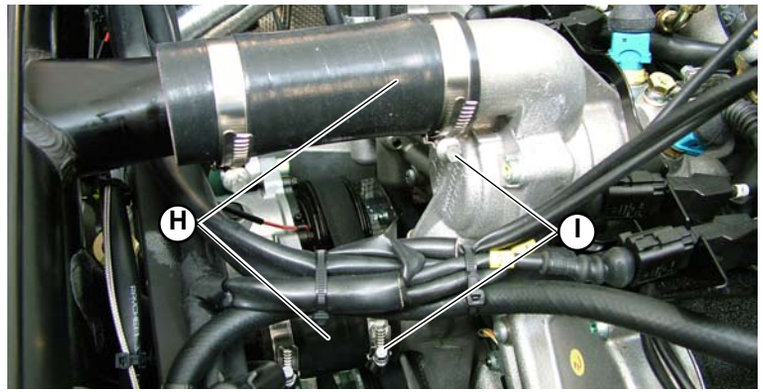

Fig.6

® Automobili Lamborghini S.p.A.
The information and procedures published below are strictly confidential and exclusively for the Lamborghini Dealer Network and Authorized Service Points. All copyrights are property of Automobili Lamborghini S.p.A based on copyright law. All of the PDF chapters in the WEB workshop manuals described below are based on information available at the time of publication. The company reserves the right to make updates and modifications. The following are prohibited: reprinting, reproduction, forwarding to unauthorized people and/or third parties, and translation, including partial, without written authorization from Automobili Lamborghini S.p.A.

Fuel supply system

The fuel supply system is divided into two parts and consists of the following:

- A tank;
- Two independent delivery lines each with pre-filter, electric pump and fuel filter;
- Two independent manifolds, each including fuel pressure regulator and six injectors;
- A return line in common.

Fuel System diagram (Fig.1)	
A.	Tank
B.	Pumps in the tank
C.	Filter
D.	Fuel Manifold
E.	Pressure regulator
F.	Immobilizer MED valves

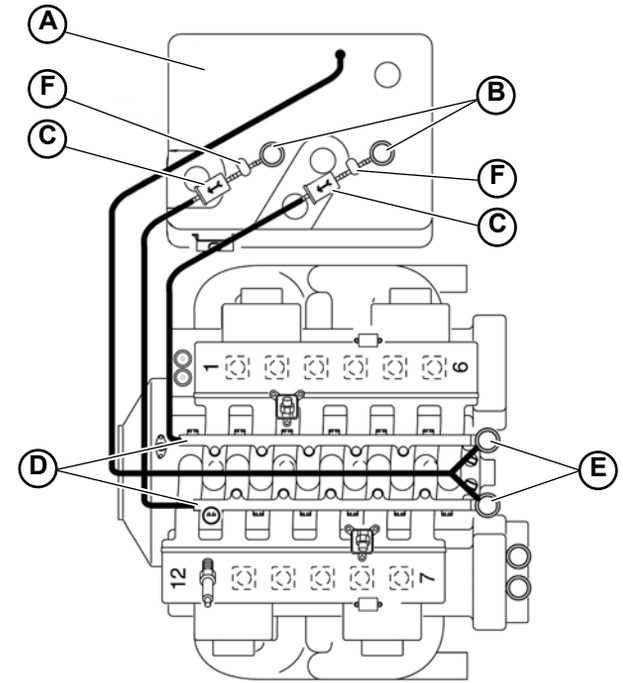

Fig.1

® Automobili Lamborghini S.p.A.
The information and procedures published below are strictly confidential and exclusively for the Lamborghini Dealer Network and Authorized Service Points. All copyrights are property of Automobili Lamborghini S.p.A based on copyright law. All of the PDF chapters in the WEB workshop manuals described below are based on information available at the time of publication. The company reserves the right to make updates and modifications. The following are prohibited: reprinting, reproduction, forwarding to unauthorized people and/or third parties, and translation, including partial, without written authorization from Automobili Lamborghini S.p.A.

Fuel pump

The two fuel pumps are supplied by a relay controlled by LIE control unit. For safety reasons the pump relevant to cylinder bank 1-6 is controlled by LIE control unit of cylinder bank 7-12 and vice versa. They are roller type positive displacement pumps with permanent magnet energizing.

Inside the pump there is a pressure relief valve that shorts the intake with the delivery if the pressure exceeds 5 bars.
The pump is also equipped with a check valve that, for a certain period of time, can hold the system under pressure with the pump at a standstill. This valve is especially important since by holding the system pressure it prevents fuel vapor from forming (vapor-lock) that causes damage when starting up with a warm engine.
The intake pipe of each pump is equipped with a protection pre-filter inside the tank.

Fuel Filter

The filter is fitted along the fuel delivery pipe downstream of the pump.
It consists of an aluminum foil wrapping and an internal polyurethane support around which is wound a powerful filtering element.

The arrow indicates the assembly direction (**Fig.2**).

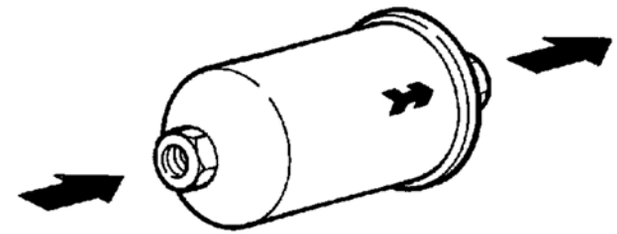

Fig.2

® Automobili Lamborghini S.p.A.
The information and procedures published below are strictly confidential and exclusively for the Lamborghini Dealer Network and Authorized Service Points. All copyrights are property of Automobili Lamborghini S.p.A based on copyright law. All of the PDF chapters in the WEB workshop manuals described below are based on information available at the time of publication. The company reserves the right to make updates and modifications. The following are prohibited: reprinting, reproduction, forwarding to unauthorized people and/or third parties, and translation, including partial, without written authorization from Automobili Lamborghini S.p.A.

Fuel supply system pressure check

- Disassemble the engine hood support pistons **(082703)**.
- Position the block for supporting the hood **(082703)**.
- Remove the silencer safety grid **(025103)**.
- Disassemble the right side carbon bulkhead **(081303)**.
- Remove the two clamps that secure the air pipes to the engine.
- Disassemble the filter cover.
- Loosen the radiator expansion tank.

1. Connect to the measurement instrumentation (**A-Fig.1**) by inserting the latter between the fuel pump (**B-Fig.1**) and the coupling (**C-Fig.1**).

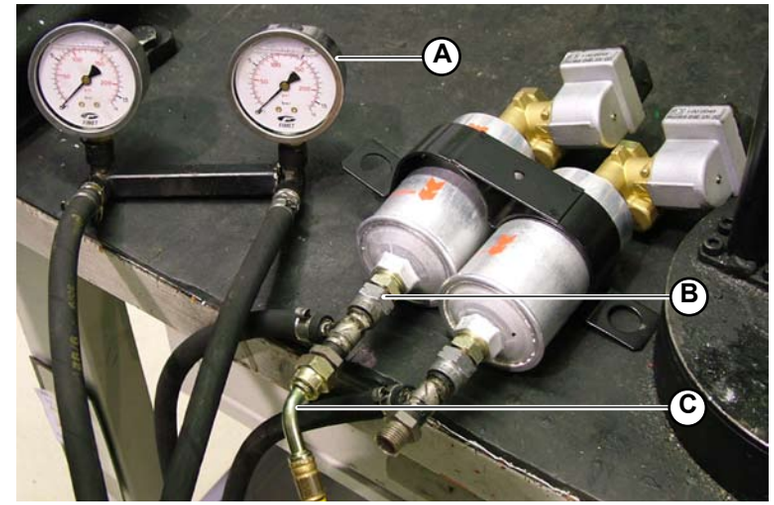

Fig.1

STOP **The pressure must be measured while the engine is at idle speed.**
The value on the measurement instrumentation must be between 3.5 and 4.2 bar (012801).

® Automobili Lamborghini S.p.A.
The information and procedures published below are strictly confidential and exclusively for the Lamborghini Dealer Network and Authorized Service Points. All copyrights are property of Automobili Lamborghini S.p.A based on copyright law. All of the PDF chapters in the WEB workshop manuals described below are based on information available at the time of publication. The company reserves the right to make updates and modifications. The following are prohibited: reprinting, reproduction, forwarding to unauthorized people and/or third parties, and translation, including partial, without written authorization from Automobili Lamborghini S.p.A.

The present section contains the following disassembly sequences:

A. pump disassembly

B. filter and MED valve disassembly

A. pump disassembly

Preliminary operations

- Disassemble the fuel tank **(020103)**.

Disassembling the pumps

1. Unscrew the screws (**A-Fig.1**) securing each of the two pumps to the tank.

2. Remove the pumps (**B-Fig.1**).

The fuel level indicator is contained in the right fuel pump (bank 7-12)(C-Fig.2).

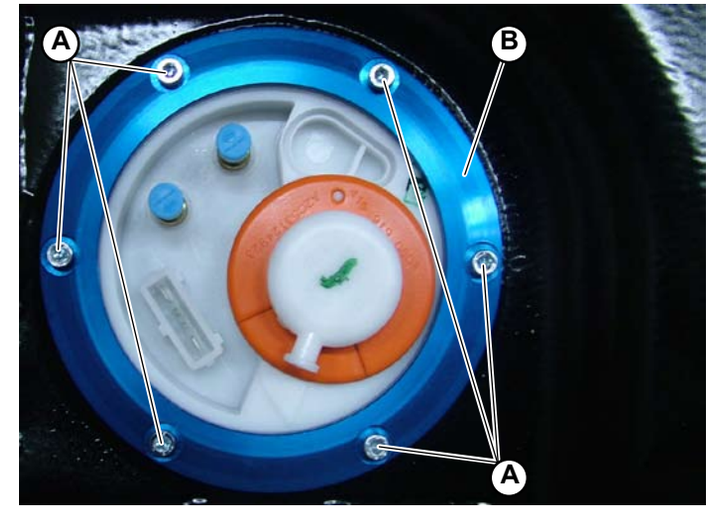

Fig.1

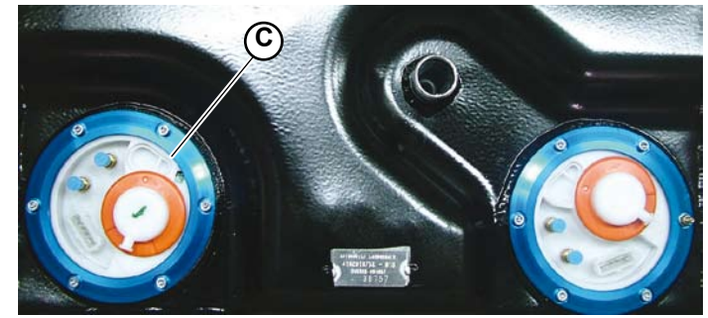

Fig.2

® Automobili Lamborghini S.p.A.
The information and procedures published below are strictly confidential and exclusively for the Lamborghini Dealer Network and Authorized Service Points. All copyrights are property of Automobili Lamborghini S.p.A based on copyright law. All of the PDF chapters in the WEB workshop manuals described below are based on information available at the time of publication. The company reserves the right to make updates and modifications. The following are prohibited: reprinting, reproduction, forwarding to unauthorized people and/or third parties, and translation, including partial, without written authorization from Automobili Lamborghini S.p.A.

B. Filter and MED valve disassembly

Preliminary operations

- Disassemble the engine hood support pistons **(082703)**.
- Position the block for supporting the hood **(082703)**.
- Remove the silencer safety grid **(025103)**.
- Disassemble the right side carbon bulkhead **(081303)**.
- Remove the two clamps that secure the air pipes to the engine.
- Disassemble the filter cover.
- Loosen the radiator expansion tank.

Filter and MED valve disassembly

1. Unscrew the two screws that secure the bracket that locks the filters in place (**A-Fig.3**).

2. Free the filter from the pipe (**B-Fig.4**) to which it is connected.

3. Free the filter from the MED valve (**C-Fig.4**).

To free the filter from the MED valve, a hammer and chisel must be used on the provided screw (D-Fig.4).

Fig.3

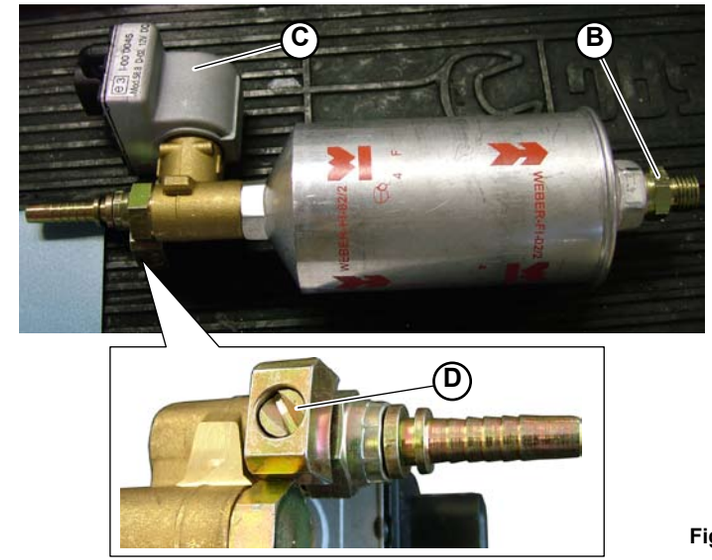

Fig.4

® Automobili Lamborghini S.p.A.
The information and procedures published below are strictly confidential and exclusively for the Lamborghini Dealer Network and Authorized Service Points. All copyrights are property of Automobili Lamborghini S.p.A based on copyright law. All of the PDF chapters in the WEB workshop manuals described below are based on information available at the time of publication. The company reserves the right to make updates and modifications. The following are prohibited: reprinting, reproduction, forwarding to unauthorized people and/or third parties, and translation, including partial, without written authorization from Automobili Lamborghini S.p.A.

The present section contains the following assembly sequences:

A. pump assembly

B. filter and MED valve assembly

A. pump assembly

1. Insert the gasket on the flange.

2. Insert the fuel pumps (**A-Fig.1**) in the relative housings and tighten the 6 screws (**B-Fig.1**).
Screw attachment; tightening torque (000800-9a).

- Reassemble the fuel tank **(020105)**.

The fuel level indicator is contained in the right fuel pump (bank 7-12)(C-Fig.2).

Check that there are no pressure leaks inside the tank (using LDAS32). If so, apply sealant and repeat the operations described above.

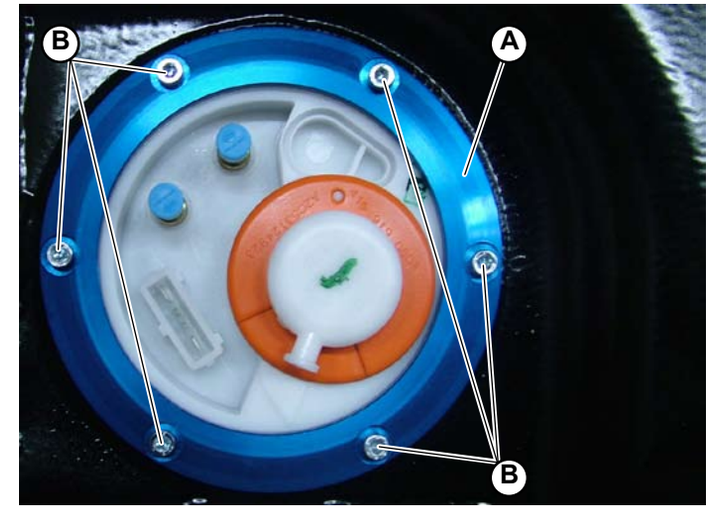

Fig.1

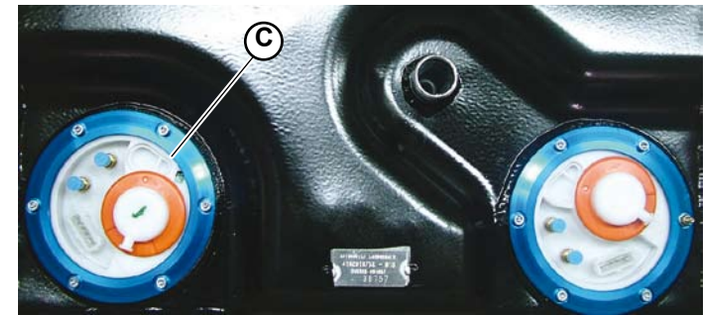

Fig.2

® Automobili Lamborghini S.p.A.
The information and procedures published below are strictly confidential and exclusively for the Lamborghini Dealer Network and Authorized Service Points. All copyrights are property of Automobili Lamborghini S.p.A based on copyright law. All of the PDF chapters in the WEB workshop manuals described below are based on information available at the time of publication. The company reserves the right to make updates and modifications. The following are prohibited: reprinting, reproduction, forwarding to unauthorized people and/or third parties, and translation, including partial, without written authorization from Automobili Lamborghini S.p.A.

B. filter and MED valve assembly

1. Secure the filter to the MED valve (**A-Fig.3**).

Secure the filter to the MED valve using the provided screw (B-Fig.3).

2. Secure the filter to the pipe (**C-Fig.3**).

3. Tighten the two screws that secure the bracket that locks the filters in place (**D-Fig.4**).

- Attach the radiator expansion tank.
- Assemble the filter cover.
- Secure the air pipes to the engine using the two clamps.
- Assemble the right side carbon bulkhead **(081305)**.
- Assemble the silencer safety grid **(025105)**.
- Assemble the engine hood support pistons **(082705)**.
- Remove the block for supporting the hood **(082705)**.

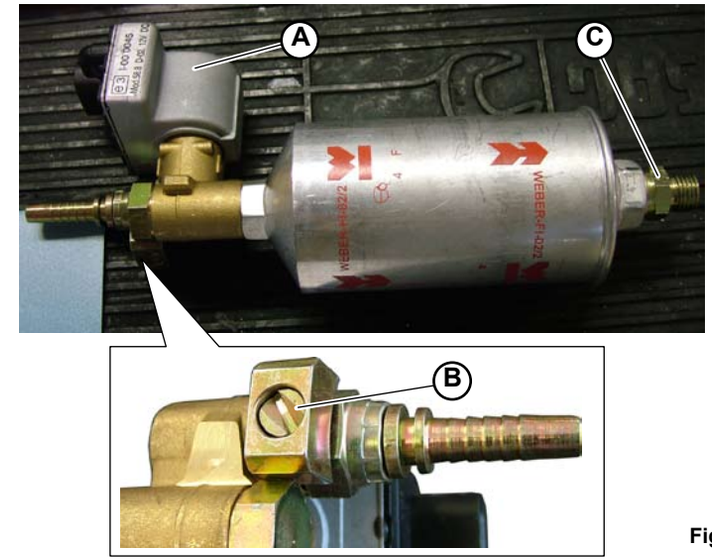

Fig.3

Fig.4

® Automobili Lamborghini S.p.A.
The information and procedures published below are strictly confidential and exclusively for the Lamborghini Dealer Network and Authorized Service Points. All copyrights are property of Automobili Lamborghini S.p.A based on copyright law. All of the PDF chapters in the WEB workshop manuals described below are based on information available at the time of publication. The company reserves the right to make updates and modifications. The following are prohibited: reprinting, reproduction, forwarding to unauthorized people and/or third parties, and translation, including partial, without written authorization from Automobili Lamborghini S.p.A.

Engine control system functional layout (Fig.1)

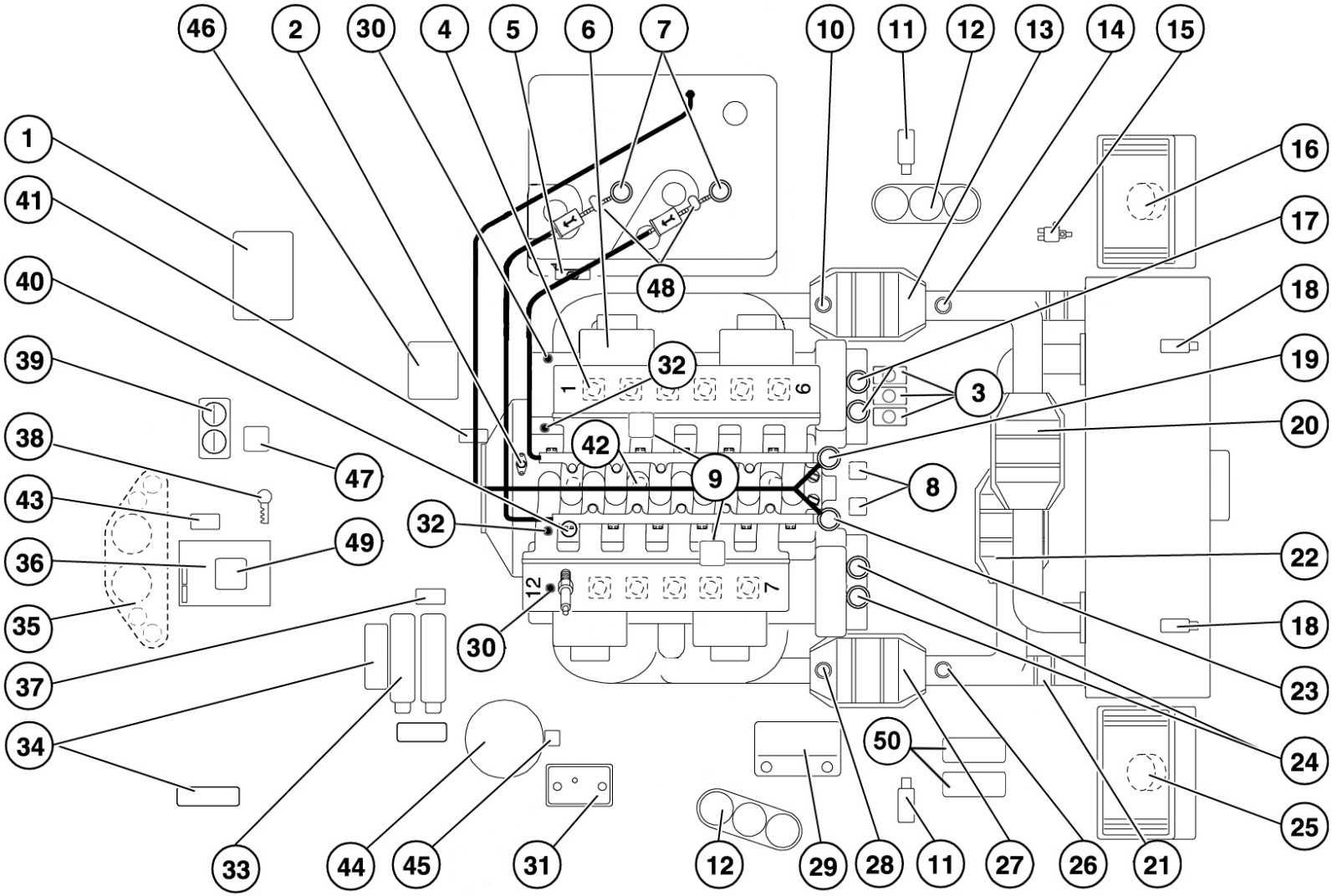

Fig.1

Engine control system function layout

1. Front relay/fuse box
2. Engine speed and TDC sensor
3. Intake manifold solenoid valves and secondary air valves
4. Single ignition coil
5. Fuel vapor pressure sensor
6. throttle bodies
7. Fuel Pump
8. Exhaust gas pressure sensors
9. TMAP
10. Cylinder bank 1-6 catalyst upstream oxygen sensor (linear)
11. Air vent regulating actuators
12. Vacuum system tanks
13. Cylinder bank 1-6 catalytic converter
14. Cylinder bank 1-6 catalyst downstream oxygen sensor
15. ENCS solenoid valve
16. Right radiator fan
17. Cylinder bank 1-6 valve timing solenoid valve
18. Spoiler actuators
19. Cylinder bank 1-6 fuel pressure regulator
20. Cylinder bank 1-6 post catalyst (USA)
21. ENCS valve
22. Cylinder bank 7-12 post catalyst (USA)
23. Cylinder bank 7-12 fuel pressure regulator
24. Cylinder bank 7-12 valve timing solenoid valve
25. Left radiator fan
26. Cylinder bank 7-12 catalyst upstream oxygen sensor
27. Cylinder bank 7-12 catalytic converter
28. Cylinder bank 7-12 catalyst downstream oxygen sensor (linear)
29. Battery
30. Cylinder bank 1-6 camshaft seat position sensor
31. Canister
32. Cylinder bank 7-12 camshaft seat position sensor
33. Engine control unit (ECU)
34. Front relay/fuse box
35. Instrument board
36. GFA control unit
37. PCM control unit
38. Ignition switch
39. Conditioning system ECU
40. Cylinder bank 7-12 injectors
41. Oil pressure sensor
42. Knock sensors
43. Throttle position sensor
44. Engine oil tank
45. Oil temperature sensor
46. E-gear oil tank
47. MED ECU
48. MED valves
49. Arrows and taillights diagnosis ECU
50. ETB ECU

® Automobili Lamborghini S.p.A.
The information and procedures published below are strictly confidential and exclusively for the Lamborghini Dealer Network and Authorized Service Points. All copyrights are property of Automobili Lamborghini S.p.A based on copyright law. All of the PDF chapters in the WEB workshop manuals described below are based on information available at the time of publication. The company reserves the right to make updates and modifications. The following are prohibited: reprinting, reproduction, forwarding to unauthorized people and/or third parties, and translation, including partial, without written authorization from Automobili Lamborghini S.p.A.

Operating Principle

Any operating point of the engine is found by two parameters:

- Rotation Speed;
- Engine Load.

Having found these parameters through relevant processing, it is possible to calculate and obtain the injection (delivered fuel amount and relevant timing in relation to bursting TDC), the ignition (correct spark advance) and any other function for each engine operating point.
The rotation speed is measured directly through the relevant sensor.
The engine load is determined indirectly trough a “density” parameter (representing the engine load) according to the absolute pressure in the intake manifold and the intake air temperature.

The engine load is continuously detected from the LIEs and elaborated according to the user’s requirements (accelerator pedal): through the **CAN** line the **LIEs** send the signal to the ETBs that control the **throttle bodies** allowing the air in the intake manifold to reach a determined density (engine load).

When testing the engine – and afterwards the car – specific maps are prepared in which, for a certain number of speed-load parameter pairs, the time/ injection timing values and ignition spark advance required for correct engine operation are stored.
These injection time values are further corrected according to the signal coming from the oxygen sensor that, based on certain operation strategies, determines a continuous fluctuation of the mixture strength around a target value.

The system is therefore defined as “speed-density-lambda” type since the injection time is fundamentally determined by these three parameters.
All operation situations that require special adaptation of the calculated time/injection timing values, spark advance and throttle bodies position are managed by the engine control unit, correcting the calculated base values through suitable strategies according to the signals coming from the system sensors.

® Automobili Lamborghini S.p.A.
The information and procedures published below are strictly confidential and exclusively for the Lamborghini Dealer Network and Authorized Service Points. All copyrights are property of Automobili Lamborghini S.p.A based on copyright law. All of the PDF chapters in the WEB workshop manuals described below are based on information available at the time of publication. The company reserves the right to make updates and modifications. The following are prohibited: reprinting, reproduction, forwarding to unauthorized people and/or third parties, and translation, including partial, without written authorization from Automobili Lamborghini S.p.A.

Injection System

The aim of the injection management strategies is to supply the engine with the correct amount of fuel at the required moment according to the engine operating conditions.

The injection management is essentially the calculation of the injection time, the determination of the injection timing and the subsequent actuation through the injector control.
The “basic” injection time is calculated by a mathematical interpolation of the speed-load map: The values contained in the map, obtained experimentally, also depend on the injector specifications.
The “final” injection time is obtained by a calculation algorithm in which the “basic” time is corrected by coefficients that take into account the different engine operating conditions both at sea level and at altitude, which are indicated by the various sensors installed in the system.

Mixt Mixtur ur ure e S Str tr trength ength Check (check in f feedb eedb eedback, ack, clo closed ed loop loop)

This strategy corrects the injection times so that the mixture strength fluctuates continually. The frequency of the fluctuation changes according to the engine load and speed.

The ratio below is the mixture ratio and is indicated with the Greek letter á (alpha):

$$\frac{\text{Quantity of air taken in by the engine}}{\text{Quantity of injected fuel}}$$

The ratio below is the stoichiometric mixture ratio and is indicated with a st:

$$\frac{\text{Theoretical quantity of air to burn - All the injected fuel}}{\text{Quantity of injected fuel}}$$

The ratio below is the mixture titration and is indicated with the Greek letter ë (lambda):

$$\frac{\text{Quantity of air taken in by the engine}}{\text{Theoretical quantity of air to burn - All the injected fuel}}$$

The stoichiometric ratio depends on the type of fuel: For current unleaded petrol it is equivalent to approx. 14.7, that corresponds to a lambda titration = 1.

® Automobili Lamborghini S.p.A.
The information and procedures published below are strictly confidential and exclusively for the Lamborghini Dealer Network and Authorized Service Points. All copyrights are property of Automobili Lamborghini S.p.A based on copyright law. All of the PDF chapters in the WEB workshop manuals described below are based on information available at the time of publication. The company reserves the right to make updates and modifications. The following are prohibited: reprinting, reproduction, forwarding to unauthorized people and/or third parties, and translation, including partial, without written authorization from Automobili Lamborghini S.p.A.

A rich mixture is when the air quantity is less than the stoichiometric quantity and in this case we have Ilios lambda <1;
A weak mixture is when the air quantity is greater than the stoichiometric quantity and in this case we have Ilios lambda >1;

The feedback operation (closed loop) permits the catalytic converters to operate efficiently. This operating condition also enables the engine control
unit to run its self-learning function.

The pre-catalytic oxygen sensors are linear and allow the engine to continuously operate under strength control; even in the WOT condition, the strength is guaranteed by the control system.

Cold Start and Running

The injection time during the starter motor actuation is determined by a special mapping according to the coolant and oil temperatures: After ignition has taken place the system passes over to the standard speed-load mapping.
When there is a cold start, since there is a natural impoverishment of the mixture due to reduced evaporation and heavy condensation on the inner walls of the fuel intake manifold, the “basic” injection time is increased by a multiplying coefficient according to the engine temperature.

Acceleration and Deceleration

Acceleration and deceleration are interpreted by the system as transient stages between two stationary conditions: This may be positive (acceleration) or negative (deceleration).
The transient strategy is very complicated since many factors have to be taken into consideration.
Usually the injection time is increased for positive transients and decreased for negative transients.
The size of the correction depends basically on the engine load variation: However, also values such as throttle movement speed (inside the throttle bodies), engine speed, engine temperature (coolant and intake air) are also involved.

Injector Control

The injector control is a timed sequential type.

Rotation Speed Limiting

The strategy limits the peak speed that can be reached by enabling the cut-off when the engine reaches this speed.
Peak speed = 8150 rpm

® Automobili Lamborghini S.p.A.
The information and procedures published below are strictly confidential and exclusively for the Lamborghini Dealer Network and Authorized Service Points. All copyrights are property of Automobili Lamborghini S.p.A based on copyright law. All of the PDF chapters in the WEB workshop manuals described below are based on information available at the time of publication. The company reserves the right to make updates and modifications. The following are prohibited: reprinting, reproduction, forwarding to unauthorized people and/or third parties, and translation, including partial, without written authorization from Automobili Lamborghini S.p.A.

Fuel Pump Control

Due to security reasons concerning the presence of throttle bodies the fuel pumps and injectors of cylinder bank 1-6 are supplied by relays controlled by LIE 7- 12 control unit and vice versa.
The pumps are stopped:

- If the engine speed drops under 350 rpm approx.;
- After a certain time (about 3 seconds) with the key to MAR position without starting up (timed enable);

Self-learning strategy

Self-learning only affects the optimum air percentage for the idle speed (0 to 60 seconds). The strength is kept constant with the target strength (value requested by the system under that particular operation condition).

The range of operation of the pre-catalytic oxygen sensor (linear) is 0.8 to 1.20.

If the value is below 1.00, the system is RICH; otherwise, the system is POOR.

The self-learning values of the linear oxygen sensors are always saved in the control unit during normal operation.

® Automobili Lamborghini S.p.A.
The information and procedures published below are strictly confidential and exclusively for the Lamborghini Dealer Network and Authorized Service Points. All copyrights are property of Automobili Lamborghini S.p.A based on copyright law. All of the PDF chapters in the WEB workshop manuals described below are based on information available at the time of publication. The company reserves the right to make updates and modifications. The following are prohibited: reprinting, reproduction, forwarding to unauthorized people and/or third parties, and translation, including partial, without written authorization from Automobili Lamborghini S.p.A.

Canister Washing

This strategy checks the position of the canister washing solenoid valve in this way:

- With the engine hot the control unit operates the solenoid valve so as to check the quantity of fuel vapors sent to the intake (canister washing), according to the engine speed and load. The system alternates washing periods with no washing periods: During the latter the self-adaptation strategy can be enabled, if these conditions occur.
- During start-up the solenoid valve remains closed, preventing the fuel vapors from enriching the mixture;
- The valves can be opened when a “closed loop” is verified.
- The valve, under certain engine operation conditions, can also operate at idle speed.
- new purge solenoid to be checked using the LDAS system, “Checklistn_LP640_MY09” screen **(109100)**.

® Automobili Lamborghini S.p.A.
The information and procedures published below are strictly confidential and exclusively for the Lamborghini Dealer Network and Authorized Service Points. All copyrights are property of Automobili Lamborghini S.p.A based on copyright law. All of the PDF chapters in the WEB workshop manuals described below are based on information available at the time of publication. The company reserves the right to make updates and modifications. The following are prohibited: reprinting, reproduction, forwarding to unauthorized people and/or third parties, and translation, including partial, without written authorization from Automobili Lamborghini S.p.A.

Engine Idle Speed Control

The aim is to maintain the engine rpm at around the memorised value, depending on the start-up temperature and the start-up time itself. A throttle value and an ideal advance value are associated with each target rpm (which forms a set point around which the system works to maintain the pre-established rpm).

- **Start-up with cold engine**
  During the ignition transient with cold engine an offset on throttle bodies opening is managed according to engine coolant temperature/ignition seconds.

- **Warm engine**
  When starting with a warm engine, a throttle bodies opening offset is applied based on the engine coolant temperature / ignition seconds and engine oil temperature in order to bring the engine to at least 1,000 rpm and prevent vapor-lock. Following these operations the system goes to idle conditions where the control unit automatically maintains the target rpm by carrying out the necessary corrections on the advance and air.

® Automobili Lamborghini S.p.A.
The information and procedures published below are strictly confidential and exclusively for the Lamborghini Dealer Network and Authorized Service Points. All copyrights are property of Automobili Lamborghini S.p.A based on copyright law. All of the PDF chapters in the WEB workshop manuals described below are based on information available at the time of publication. The company reserves the right to make updates and modifications. The following are prohibited: reprinting, reproduction, forwarding to unauthorized people and/or third parties, and translation, including partial, without written authorization from Automobili Lamborghini S.p.A.

Fuel Manifold

Each cylinder bank is equipped with a fuel manifold that distributes the fuel to the injectors.

Fuel manifold (Fig.2)	
A.	Cylinder bank 7-12 fuel manifold
B.	Cylinder bank 7-12 pressure regulator
C.	Injector
D.	Cylinder bank 1-6 fuel manifold
E.	Cylinder bank 1-6 pressure regulator

In the throttle body pcodes, the positioning of the body depending on the cylinder bank and its position is displayed: **Front** and **Rear** (front is the throttle body on the flywheel side, and rear is the throttle body on the exhaust side).

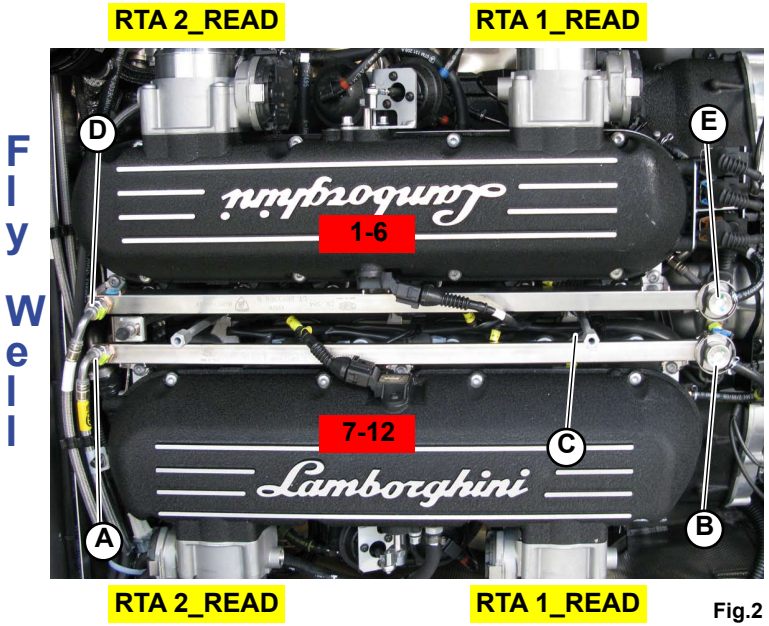

Fig.2

® Automobili Lamborghini S.p.A.
The information and procedures published below are strictly confidential and exclusively for the Lamborghini Dealer Network and Authorized Service Points. All copyrights are property of Automobili Lamborghini S.p.A based on copyright law. All of the PDF chapters in the WEB workshop manuals described below are based on information available at the time of publication. The company reserves the right to make updates and modifications. The following are prohibited: reprinting, reproduction, forwarding to unauthorized people and/or third parties, and translation, including partial, without written authorization from Automobili Lamborghini S.p.A.

Fuel Pressure Regulator

This is a differential device with a diaphragm, located in the front part of each fuel manifold and set by the manufacturer to a pressure of 4.00 ± 0.05 bars.
The fuel under pressure coming from the pump pushes onto the diaphragm (**C-Fig.3**) of the downflow valve (**D-Fig.3**), opposed by the calibrated spring (**B-Fig.3**).

When the pressure exceeds the set pressure, the downflow valve opens and the excess fuel returns to the tank. Furthermore, through the pressure tap (**A-Fig.3**), the vacuum in the intake manifold (where the injector shutter is also located), operating on the regulator diaphragm, proportionally reduces the load from the calibrated spring.

In this way the pressure difference is kept constant between the fuel and the environment in which the injector is located (intake manifold) under all engine operating conditions.

The fuel pressure is taken as a fixed parameter, i.e. not checked by the control unit when calculating the amount of injected fuel: Therefore the regulator must not be tampered with to avoid altering the engine metering.

Pressure regulator (Fig.3)	
A.	Vacuum signal tap
B.	Calibrated spring
C.	Diaphragm
D.	Downflow valve
E.	Fuel return
F.	Fuel inlet

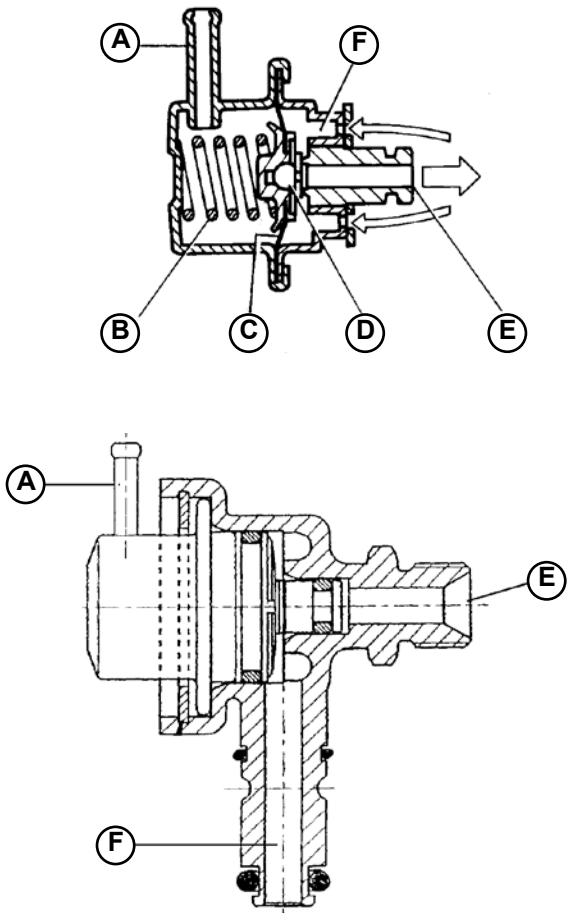

Fig.3

® Automobili Lamborghini S.p.A.
The information and procedures published below are strictly confidential and exclusively for the Lamborghini Dealer Network and Authorized Service Points. All copyrights are property of Automobili Lamborghini S.p.A based on copyright law. All of the PDF chapters in the WEB workshop manuals described below are based on information available at the time of publication. The company reserves the right to make updates and modifications. The following are prohibited: reprinting, reproduction, forwarding to unauthorized people and/or third parties, and translation, including partial, without written authorization from Automobili Lamborghini S.p.A.

Injectors

The task of the injector is to deliver the amount of fuel required for the engine operation: The fuel is injected into the intake duct, immediately upstream of the intake valves.
As the pressure differential is constant between inside and outside the injector (due to the regulator), the quantity of fuel delivered, with the same electric power depends only on the opening time, established by the control unit.
The injector is the “top-feed” type with the fuel supplied from the rear of the body (**H-Fig.4**), where the electric winding (**D-Fig.4**) is also located, connected to connector (**E-Fig.4**). The needle (**B-Fig.4**), integral with the anchor (**C-Fig.4**), is thrust against the seal seat by a spring (**I-Fig.4**).
When current passes through the winding the magnetic field created attracts the anchor (**C-Fig.4**) and as a consequence the needle (**B-Fig.4**) opens the injector and the fuel flows through
When the current ceases, the shutter is called back into position by the spring (**I-Fig.4**).

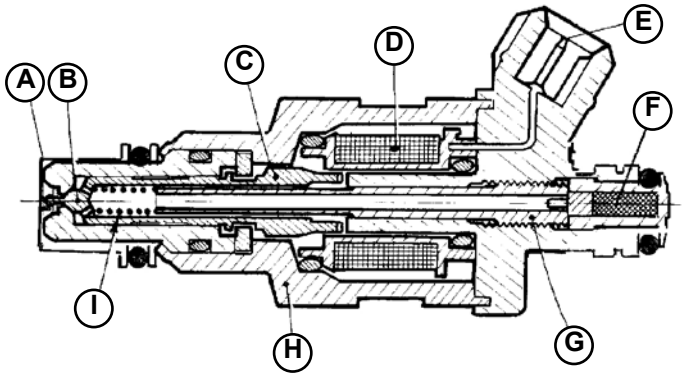

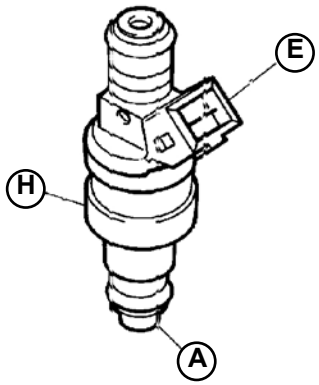

Fig.4

Injector (Fig.4)	
1.	Snug
2.	Needle
3.	Magnetic anchor
4.	Winding
5.	Connector
6.	Filter
7.	Spring thruster
8.	Body
9.	Return spring

® Automobili Lamborghini S.p.A.
The information and procedures published below are strictly confidential and exclusively for the Lamborghini Dealer Network and Authorized Service Points. All copyrights are property of Automobili Lamborghini S.p.A based on copyright law. All of the PDF chapters in the WEB workshop manuals described below are based on information available at the time of publication. The company reserves the right to make updates and modifications. The following are prohibited: reprinting, reproduction, forwarding to unauthorized people and/or third parties, and translation, including partial, without written authorization from Automobili Lamborghini S.p.A.

Injection system check

STOP Carry out the test in a good ventilated and free of naked flames area.
Do not smoke.

Preliminary checks

Start the engine and:
- Check pipe and clamp condition;
- Check for pipe and regulator leakage;
- Replace any component that presents visible leakage.

Pressure regulator check

To check the operation of the pressure regulator proceed as follows:
- Connect a precision pressure gauge to the shut off tap, inserting it between the injector holder manifold and the delivery coupling; check that the tap is open;
- Start up the engine and check that pressure p is within the prescribed values:

$$3.5 < p < 4.2 \text{ bar}$$

If the pressure is above 4.2 bar: replace the pressure regulator.
If the pressure is below 3.5 bar: Check the fuel pump delivery pressure: If the delivery pressure is correct replace the pressure regulator (5 bars).

- Check that the pressure inside the system does not fall below 1 bar for at least 1 hour. If there are no visible leakages, check the regulator and injectors.

Fuel pump delivery pressure check

Close the tool tap to cut off the fuel pump delivery.
Check that the pressure is above 4.5 bars.
If the pressure is lower:
- Check the MED valve condition;
- Check for filter obstruction;
- Check the pump delivery pressure upstream of the MED valve.

® Automobili Lamborghini S.p.A.
The information and procedures published below are strictly confidential and exclusively for the Lamborghini Dealer Network and Authorized Service Points. All copyrights are property of Automobili Lamborghini S.p.A based on copyright law. All of the PDF chapters in the WEB workshop manuals described below are based on information available at the time of publication. The company reserves the right to make updates and modifications. The following are prohibited: reprinting, reproduction, forwarding to unauthorized people and/or third parties, and translation, including partial, without written authorization from Automobili Lamborghini S.p.A.

Injection rail disassembly

Preliminary operations

- Remove the carbon bulkhead above the manifold **(081303)**.

Injection rail disassembly

1. Unscrew the three screws (**A-Fig.1**) that secure the injection rail to the engine.
2. Disconnect the injection rail from the front pipe (**B-Fig.2**).
3. Disconnect the pressure regulator's pipe (**C-Fig.1**).
4. Disconnect the regulator's fuel delivery pipe (**D-Fig.1**).
5. Extract the injection rail.

STOP **When freeing the various pipes, be very careful of any fuel residues still inside them which could spill onto parts that are still hot inside the engine hood.**
These operations should therefore always be carried out with the engine cold and, in any case, using a pan for collecting fuel that spills out of the pipes.

Fig.1

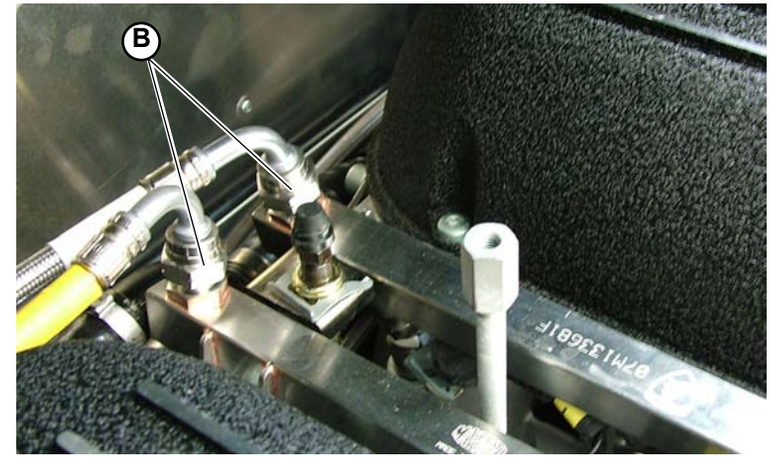

Fig.2

® Automobili Lamborghini S.p.A.
The information and procedures published below are strictly confidential and exclusively for the Lamborghini Dealer Network and Authorized Service Points. All copyrights are property of Automobili Lamborghini S.p.A based on copyright law. All of the PDF chapters in the WEB workshop manuals described below are based on information available at the time of publication. The company reserves the right to make updates and modifications. The following are prohibited: reprinting, reproduction, forwarding to unauthorized people and/or third parties, and translation, including partial, without written authorization from Automobili Lamborghini S.p.A.

Injection system cleaning

Safety precautions

To decrease the risk of personal injury and/or injection and ignition system damage, take the following precautions:

CAUTION!

High pressure in the fuel delivery system! Before opening high-pressure components of the fuel delivery system, lower the pressure to residual value.

STOP

- **Wrap a clean cloth around the point of connection and lower the residual pressure by carefully loosening the connection.**
- **Always turn off the engine before disconnecting or connecting fuel delivery pipes and ignition system pipes (LIE).**
- **During testing, the control module (LIE) might identify and store a malfunction code (DTC: Diagnostic Trouble Code). When testing and repairs are finished, the DTC memory should be checked and deleted, if necessary.**
- **The engine must always be off when connecting and disconnecting the battery so that the engine control module does not become damaged (LIE).**
  Use the battery disconnect in the engine compartment to disconnect the battery.

CAUTION!

Always turn the engine off before cleaning it.

® Automobili Lamborghini S.p.A.
The information and procedures published below are strictly confidential and exclusively for the Lamborghini Dealer Network and Authorized Service Points. All copyrights are property of Automobili Lamborghini S.p.A based on copyright law. All of the PDF chapters in the WEB workshop manuals described below are based on information available at the time of publication. The company reserves the right to make updates and modifications. The following are prohibited: reprinting, reproduction, forwarding to unauthorized people and/or third parties, and translation, including partial, without written authorization from Automobili Lamborghini S.p.A.

Cleaning

The fuel injection system could become damaged due to even slight contamination. During injection/fuel delivery system maintenance, pay attention to the following cleaning rules:

- Thoroughly clean each point of connection and the areas near the engine before disconnecting the parts.
- Immediately close open connections and pipes with protection caps.
- Place the removed components on a clean surface and cover them. Use intact cloths.
- Install the clean components: Remove the spare parts immediately before installation. Do not use components stored without their packaging (for example, in toolboxes, etc.).
- When the system is open: Do not use compressed air. Do not move the vehicle (unless absolutely necessary).
- Separated electrical connectors: Protect them from dirt and humidity. Make sure they are dry before reconnecting them.

® Automobili Lamborghini S.p.A.
The information and procedures published below are strictly confidential and exclusively for the Lamborghini Dealer Network and Authorized Service Points. All copyrights are property of Automobili Lamborghini S.p.A based on copyright law. All of the PDF chapters in the WEB workshop manuals described below are based on information available at the time of publication. The company reserves the right to make updates and modifications. The following are prohibited: reprinting, reproduction, forwarding to unauthorized people and/or third parties, and translation, including partial, without written authorization from Automobili Lamborghini S.p.A.

Injection rail assembly

1. Connect the regulator's fuel delivery pipe (**A-Fig.1**).
2. Connect the pressure regulator's pipe (**B-Fig.1**).
3. Connect the injection rails to the front pipes (**C-Fig.2**).
   Injection rails attachment; **tightening torque (000800-14c).**
4. Secure the manifold to the engine using the three mounting screws (**D-Fig.1**).

- Assemble the carbon bulkhead above the manifold **(081305)**.

Fig.1

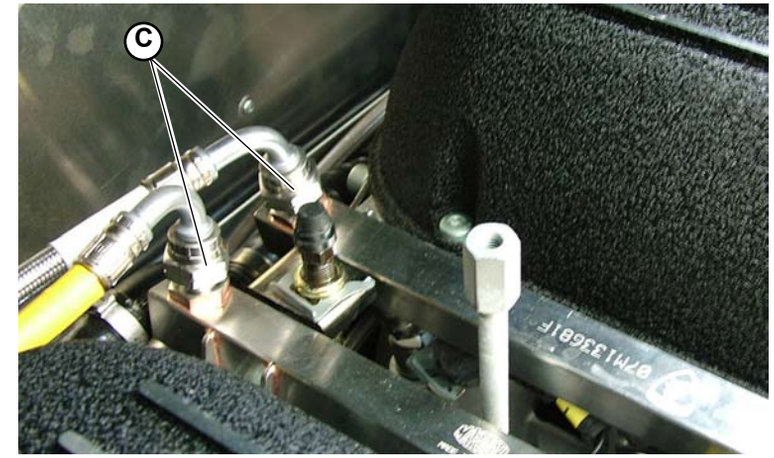

Fig.2

® Automobili Lamborghini S.p.A.
The information and procedures published below are strictly confidential and exclusively for the Lamborghini Dealer Network and Authorized Service Points. All copyrights are property of Automobili Lamborghini S.p.A based on copyright law. All of the PDF chapters in the WEB workshop manuals described below are based on information available at the time of publication. The company reserves the right to make updates and modifications. The following are prohibited: reprinting, reproduction, forwarding to unauthorized people and/or third parties, and translation, including partial, without written authorization from Automobili Lamborghini S.p.A.

Air intake manifold

The intake system is divided into two parts, one for each cylinder bank. Each part consists of:

- An air cleaner with a connecting sleeve to the relevant throttle bodies
- An intake manifold, variable volume type, on which four throttle bodies and a fuel manifold are installed;

Intake manifolds pneumatic connections (Fig.1)	
A.	Air filters
B.	Sleeve
C.	Intake manifold
D.	Throttle bodies

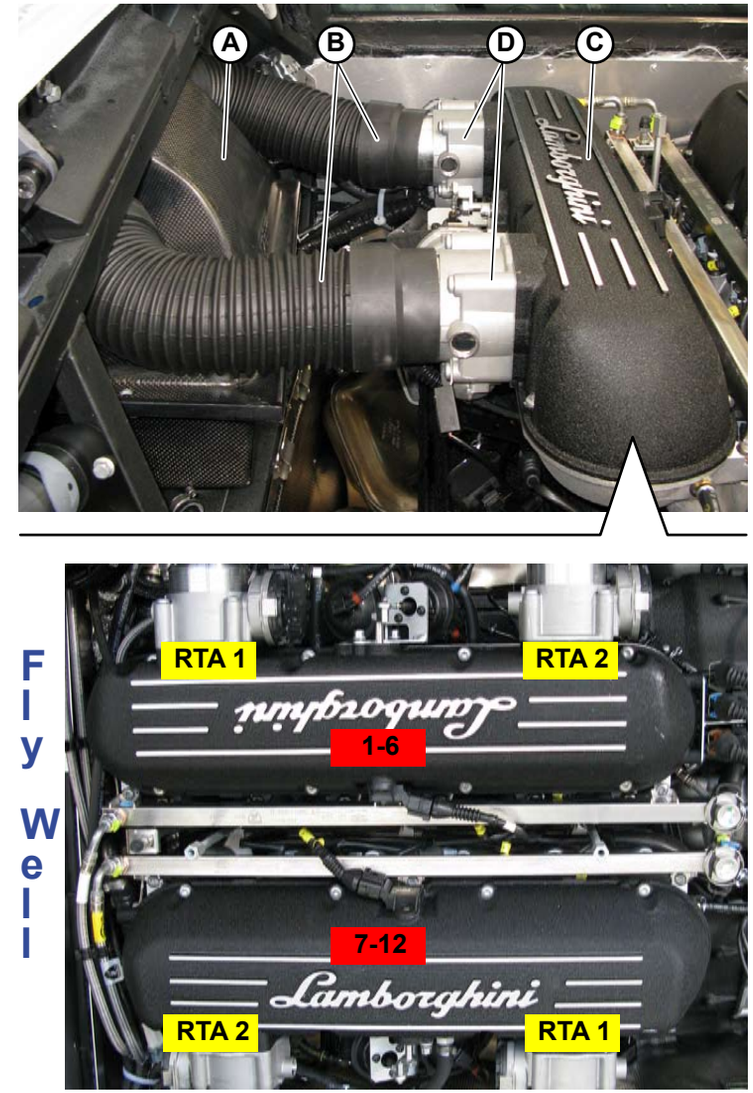

Fig.1

® Automobili Lamborghini S.p.A.
The information and procedures published below are strictly confidential and exclusively for the Lamborghini Dealer Network and Authorized Service Points. All copyrights are property of Automobili Lamborghini S.p.A based on copyright law. All of the PDF chapters in the WEB workshop manuals described below are based on information available at the time of publication. The company reserves the right to make updates and modifications. The following are prohibited: reprinting, reproduction, forwarding to unauthorized people and/or third parties, and translation, including partial, without written authorization from Automobili Lamborghini S.p.A.

Throttle bodies (Fig.2)

The throttle bodie meters the engine air flow rate, and then the power developed by the engine according to the requests of LIE control units received by CAN lines. The LIEs create these requests according to PA and RPM parameters, and operating strategies at idle and start-up.
Each throttle bodie has a throttle controlled by an actuator that receives opening information from the ETB ECU. There are 2 feedback potentiometers inside the throttle that read its position in order to diagnose any malfunctioning of the throttle body and send the information to the ETB ECU (which forwards the information to the 1-5 cylinder bank LIE).

Do not disassemble the throttle bodie, but only clean it.

Fig.2

VIS System (Variable Intake System)

To optimize the intake manifold fluid mechanics each plenum is equipped with throttles driven by pneumatic actuators that allows to modify the intake resonance frequencies. In this way the filling up of the cylinders at different engine speed is improved; the torque output is thus optimized.
The pneumatic actuators are driven by control solenoid valves directly managed by the LIEs according to the engine coolant temperature (the system is disabled at temperatures < 60°C) and engine rpm.

VIS system components (Fig.3)	
A.	PLENUM VLV
B.	PLENUM
C.	BYPASS
D.	BYPASS VLV
E.	Pneumatic actuator
F.	Control solenoid valves

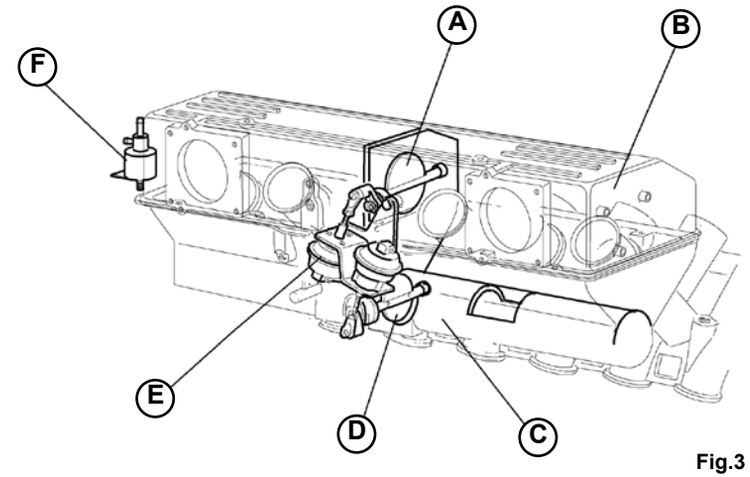

Fig.3

® Automobili Lamborghini S.p.A.
The information and procedures published below are strictly confidential and exclusively for the Lamborghini Dealer Network and Authorized Service Points. All copyrights are property of Automobili Lamborghini S.p.A based on copyright law. All of the PDF chapters in the WEB workshop manuals described below are based on information available at the time of publication. The company reserves the right to make updates and modifications. The following are prohibited: reprinting, reproduction, forwarding to unauthorized people and/or third parties, and translation, including partial, without written authorization from Automobili Lamborghini S.p.A.

VIS features three operation modes (**Fig.4**):

"CC"	**BP = Close** **PL = Close**	LOW RPM
"CA"	**BP = Open** **PL = Close**	MEDIUM RPM
"AA"	**BP = Open** **PL = Open**	HIGH RPM

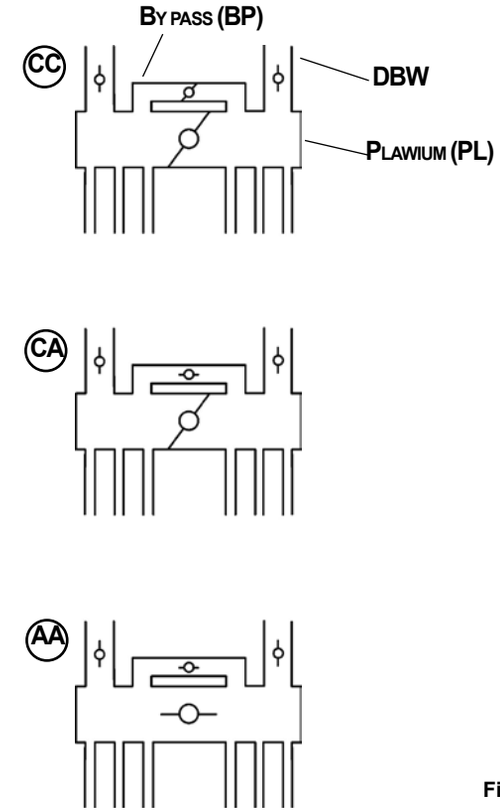

Fig.4

® Automobili Lamborghini S.p.A.
The information and procedures published below are strictly confidential and exclusively for the Lamborghini Dealer Network and Authorized Service Points. All copyrights are property of Automobili Lamborghini S.p.A based on copyright law. All of the PDF chapters in the WEB workshop manuals described below are based on information available at the time of publication. The company reserves the right to make updates and modifications. The following are prohibited: reprinting, reproduction, forwarding to unauthorized people and/or third parties, and translation, including partial, without written authorization from Automobili Lamborghini S.p.A.

Inspecting the throttle bodies

Use the LDAS32 system to inspect the throttle bodies **(109100)** LP640 MY09 “Check list”.

General knowledge required to carry out the inspection:

1. If the value provided by the LDAS32 system is < 15, the ETB control unit is broken or not being supplied; if, however, the value is equal to zero, then it is the throttle body that is broken or not supplied.

2. If the numerical values of the throttle bodies differ, it is necessary to carry out a search for the error.

3. If in the IDLE MAP COMP. string, the LDAS32 system determines a correction percentage above 4.5%, the rear part of the throttle needs to be cleaned with a de-greaser.

® Automobili Lamborghini S.p.A.
The information and procedures published below are strictly confidential and exclusively for the Lamborghini Dealer Network and Authorized Service Points. All copyrights are property of Automobili Lamborghini S.p.A based on copyright law. All of the PDF chapters in the WEB workshop manuals described below are based on information available at the time of publication. The company reserves the right to make updates and modifications. The following are prohibited: reprinting, reproduction, forwarding to unauthorized people and/or third parties, and translation, including partial, without written authorization from Automobili Lamborghini S.p.A.

This section explains how to disassemble:

A) Disassembling the throttle bodies
B) Disassembling the air intake manifold

A) Disassembling the throttle bodies

1. Detach the clamp (**A-Fig. 1**) connecting the air intake pipe (**B-Fig. 1**) to the throttle body (**C-Fig. 1**).
2. Disconnect the throttle body from the engine by unscrewing the 4 screws (**D-Fig. 2**) and detaching the connector (**E-Fig. 2**).

Once the throttle body has been disassembled, it is advisable to replace the gasket on the engine before reassembling the throttle body. Therefore, do not reassemble the throttle body on the same gasket.

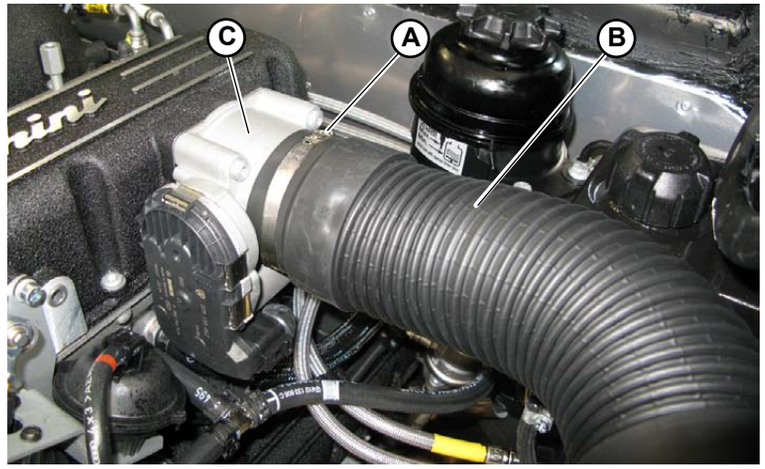

Fig.1

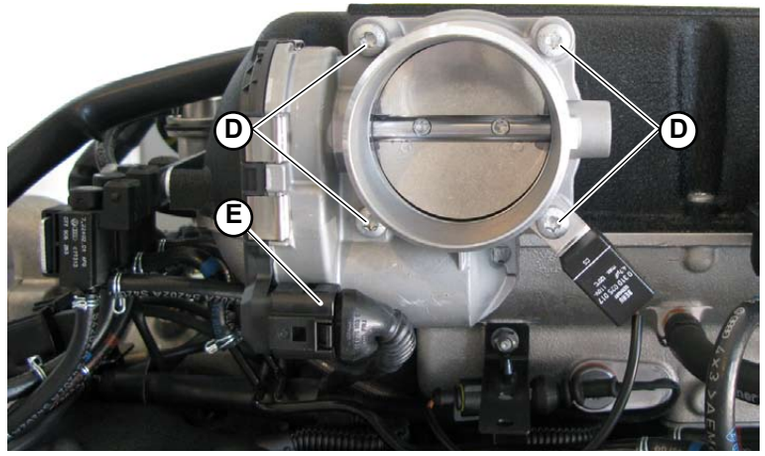

Fig.2

® Automobili Lamborghini S.p.A.
The information and procedures published below are strictly confidential and exclusively for the Lamborghini Dealer Network and Authorized Service Points. All copyrights are property of Automobili Lamborghini S.p.A based on copyright law. All of the PDF chapters in the WEB workshop manuals described below are based on information available at the time of publication. The company reserves the right to make updates and modifications. The following are prohibited: reprinting, reproduction, forwarding to unauthorized people and/or third parties, and translation, including partial, without written authorization from Automobili Lamborghini S.p.A.

B) Disassembling the air intake manifold

Preliminary operations

- Disassemble the engine safety cover **(081303)**.
- Disassemble the left side carbon bulkhead **(081303)**.

Manifold disassemble

1. Disconnect the fuel delivery pipes (**A-Fig.3**).

Fig.3

2. Disconnect the fuel return pipes (**B-Fig.4**).

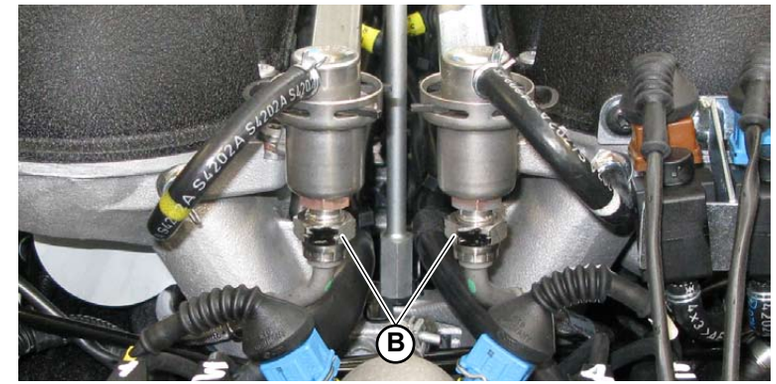

Fig.4

® Automobili Lamborghini S.p.A.
The information and procedures published below are strictly confidential and exclusively for the Lamborghini Dealer Network and Authorized Service Points. All copyrights are property of Automobili Lamborghini S.p.A based on copyright law. All of the PDF chapters in the WEB workshop manuals described below are based on information available at the time of publication. The company reserves the right to make updates and modifications. The following are prohibited: reprinting, reproduction, forwarding to unauthorized people and/or third parties, and translation, including partial, without written authorization from Automobili Lamborghini S.p.A.

3. Remove the clamps (**C-Fig.5**) and disconnect the wiring harness connectors (**D-Fig.5**) secured onto the rear cross member.

4. Disconnect the air intake pipes **(Point A)**.

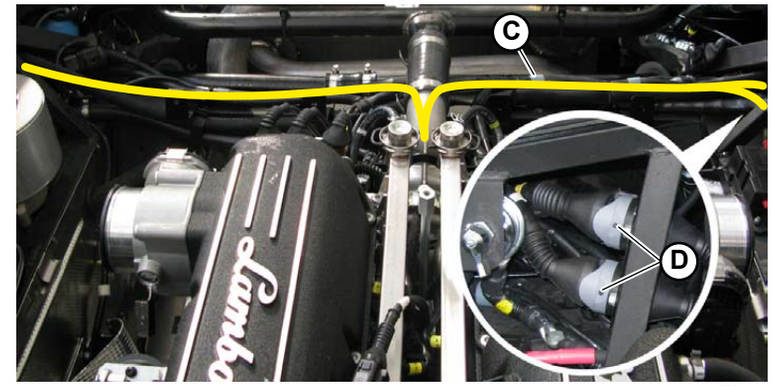

Fig.5

5. Disconnect the coils (**E-Fig.6**).

Fig.6

6. Disconnect the knock sensors (**F-Fig.7**) and the respective support (**G-Fig.7**).

7. Disconnect the variable valve timing pins (**H-Fig.7**).

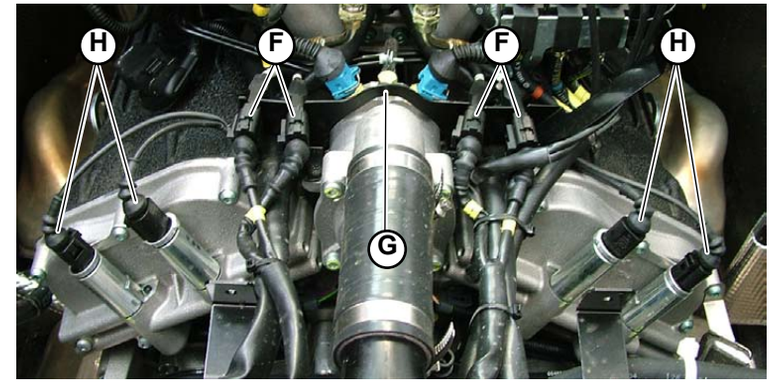

Fig.7

® Automobili Lamborghini S.p.A.
The information and procedures published below are strictly confidential and exclusively for the Lamborghini Dealer Network and Authorized Service Points. All copyrights are property of Automobili Lamborghini S.p.A based on copyright law. All of the PDF chapters in the WEB workshop manuals described below are based on information available at the time of publication. The company reserves the right to make updates and modifications. The following are prohibited: reprinting, reproduction, forwarding to unauthorized people and/or third parties, and translation, including partial, without written authorization from Automobili Lamborghini S.p.A.

8. Remove the 2 screws (**I-Fig.8**) securing the grounds onto the crankcase.

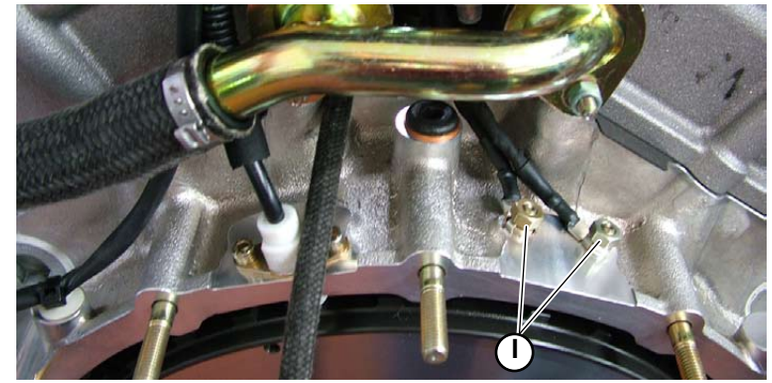

Fig.8

9. Disconnect the pipes connecting the manifold valves (**L-Fig.9**).

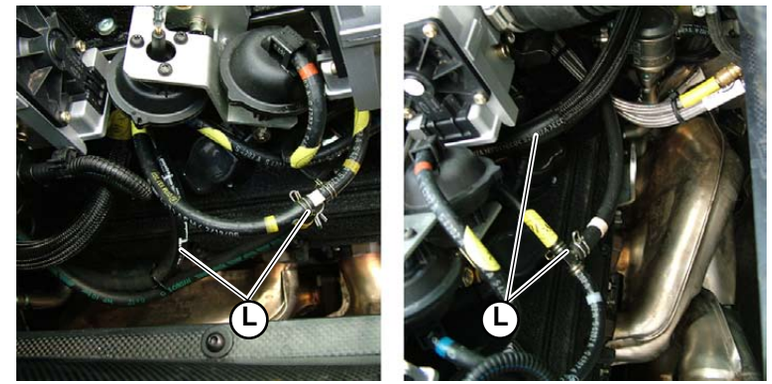

Fig.9

10. Unscrew the 3 center screws (**M-Fig.10**).

11. Remove the air intake manifold.

Fig.10

® Automobili Lamborghini S.p.A.
The information and procedures published below are strictly confidential and exclusively for the Lamborghini Dealer Network and Authorized Service Points. All copyrights are property of Automobili Lamborghini S.p.A based on copyright law. All of the PDF chapters in the WEB workshop manuals described below are based on information available at the time of publication. The company reserves the right to make updates and modifications. The following are prohibited: reprinting, reproduction, forwarding to unauthorized people and/or third parties, and translation, including partial, without written authorization from Automobili Lamborghini S.p.A.

This section explains how to assemble:

A) Assembling the throttle bodies
B) Assembling the air intake manifold

A) Assembling the throttle bodies

1. Connect the throttle body to the engine by tightening the 4 screws (**A-Fig. 1**) and connect the connector (**B-Fig. 1**).
2. Connect the air intake pipe (**C-Fig. 2**) to the throttle body (**D-Fig. 2**) using the clamp (**E-Fig. 2**).

Before assembling the throttle body, ensure the gasket in contact with the engine is undamaged and that it has never been used before.

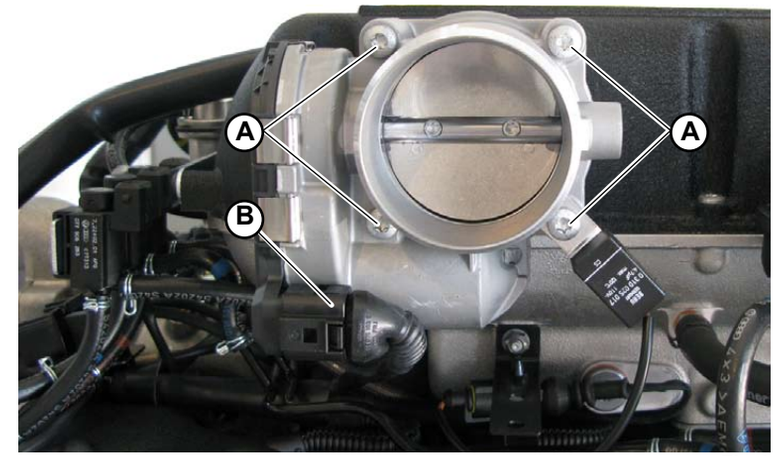

Fig.1

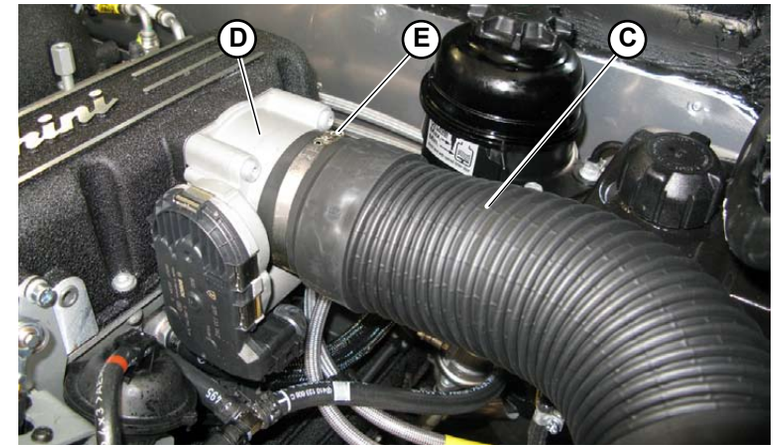

Fig.2

® Automobili Lamborghini S.p.A.
The information and procedures published below are strictly confidential and exclusively for the Lamborghini Dealer Network and Authorized Service Points. All copyrights are property of Automobili Lamborghini S.p.A based on copyright law. All of the PDF chapters in the WEB workshop manuals described below are based on information available at the time of publication. The company reserves the right to make updates and modifications. The following are prohibited: reprinting, reproduction, forwarding to unauthorized people and/or third parties, and translation, including partial, without written authorization from Automobili Lamborghini S.p.A.

B) Assembling the air intake manifold

1. Position the air intake manifold.
2. Tighten the 3 center screws (**A-Fig.3**).

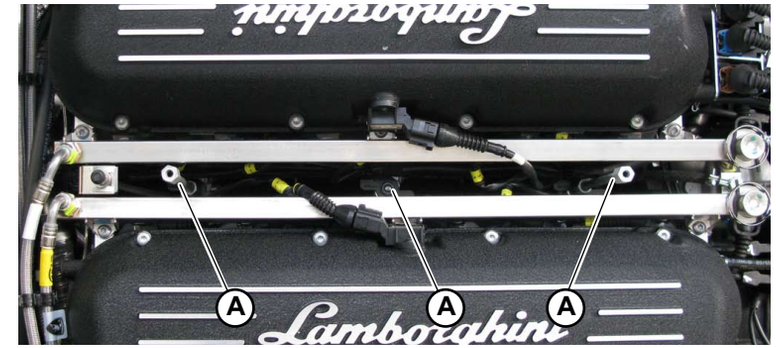

Fig.3

3. Connect the manifold valve pipes (**B-Fig.4**).

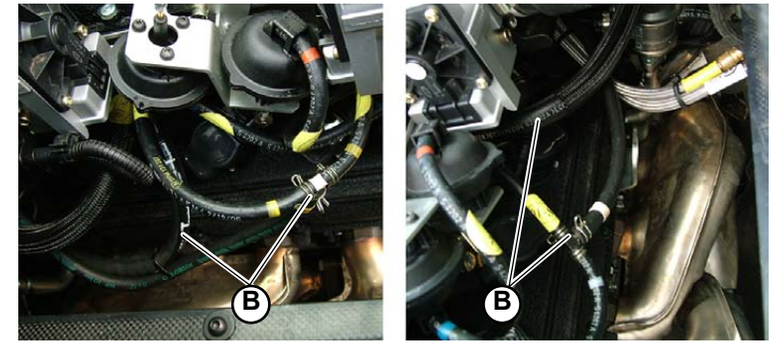

Fig.4

4. Secure the grounds onto the crankcase using the 2 screws (**C-Fig.5**).

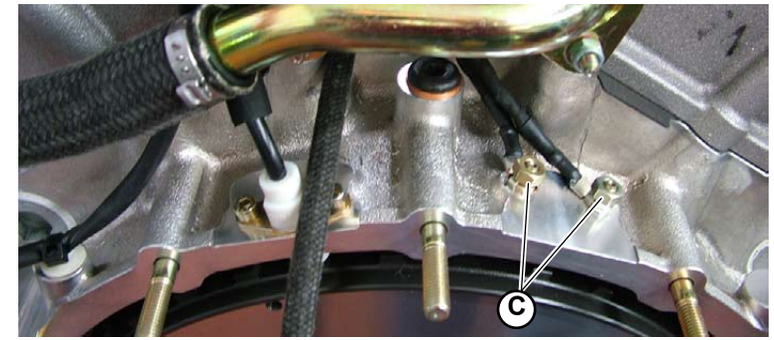

Fig.5

® Automobili Lamborghini S.p.A.
The information and procedures published below are strictly confidential and exclusively for the Lamborghini Dealer Network and Authorized Service Points. All copyrights are property of Automobili Lamborghini S.p.A based on copyright law. All of the PDF chapters in the WEB workshop manuals described below are based on information available at the time of publication. The company reserves the right to make updates and modifications. The following are prohibited: reprinting, reproduction, forwarding to unauthorized people and/or third parties, and translation, including partial, without written authorization from Automobili Lamborghini S.p.A.

5. Connect the variable valve timing pins (**D-Fig.6**).

6. Connect the knock sensors (**E-Fig.6**) and the respective support (**F-Fig.6**).

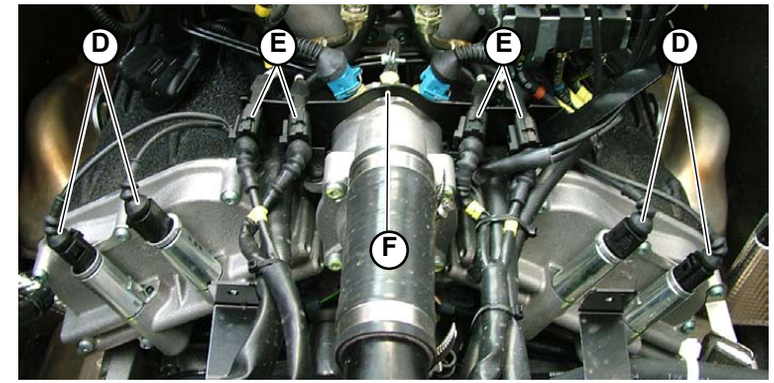

Fig.6

7. Connect the coils (**G-Fig.7**).

8. Connect the air intake pipes **(Point A)**.

Fig.7

9. Connect the wiring harness connectors (**H-Fig.8**) and secure them onto the rear cross member using clamps (**I-Fig.8**).

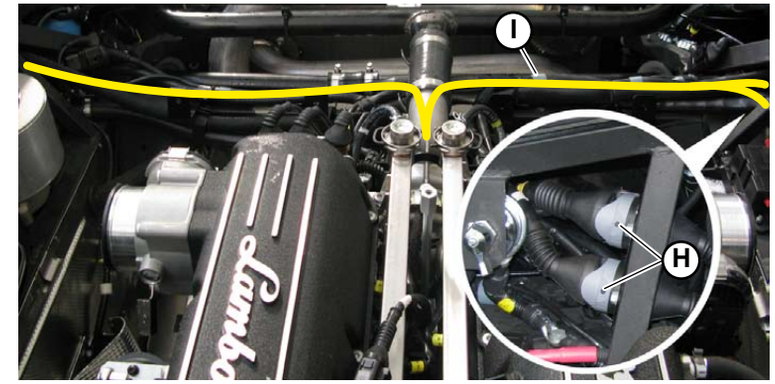

Fig.8

® Automobili Lamborghini S.p.A.
The information and procedures published below are strictly confidential and exclusively for the Lamborghini Dealer Network and Authorized Service Points. All copyrights are property of Automobili Lamborghini S.p.A based on copyright law. All of the PDF chapters in the WEB workshop manuals described below are based on information available at the time of publication. The company reserves the right to make updates and modifications. The following are prohibited: reprinting, reproduction, forwarding to unauthorized people and/or third parties, and translation, including partial, without written authorization from Automobili Lamborghini S.p.A.

10. Connect the fuel return pipes (**L-Fig.9**).
Tightening torque of union; **Tightening Torque (000800-22c).**

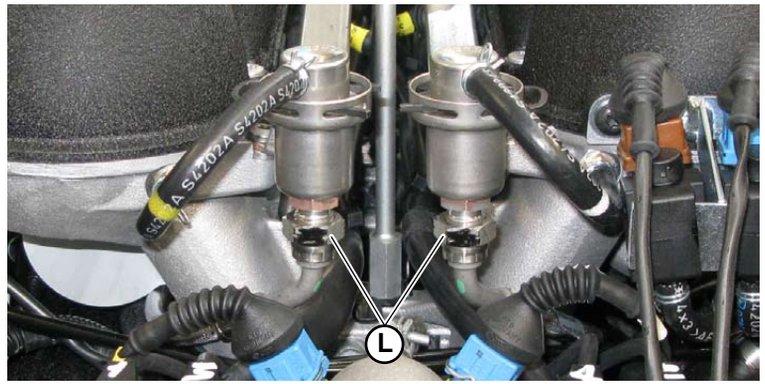

Fig.9

11. Connect the fuel delivery pipes (**M-Fig.10**).
Tightening torque of union; **Tightening Torque (000800-14c).**

Fig.10

- Assemble the engine safety cover **(081305)**.
- Assemble the left side carbon bulkhead **(081305)**.

® Automobili Lamborghini S.p.A.
The information and procedures published below are strictly confidential and exclusively for the Lamborghini Dealer Network and Authorized Service Points. All copyrights are property of Automobili Lamborghini S.p.A based on copyright law. All of the PDF chapters in the WEB workshop manuals described below are based on information available at the time of publication. The company reserves the right to make updates and modifications. The following are prohibited: reprinting, reproduction, forwarding to unauthorized people and/or third parties, and translation, including partial, without written authorization from Automobili Lamborghini S.p.A.

Oil filter disassembly

- Loosen the consumed oil filter (**A-Fig.1**) using the special tool **(000200)** that releases it.
- Remove the oil filter by manually unscrewing it.

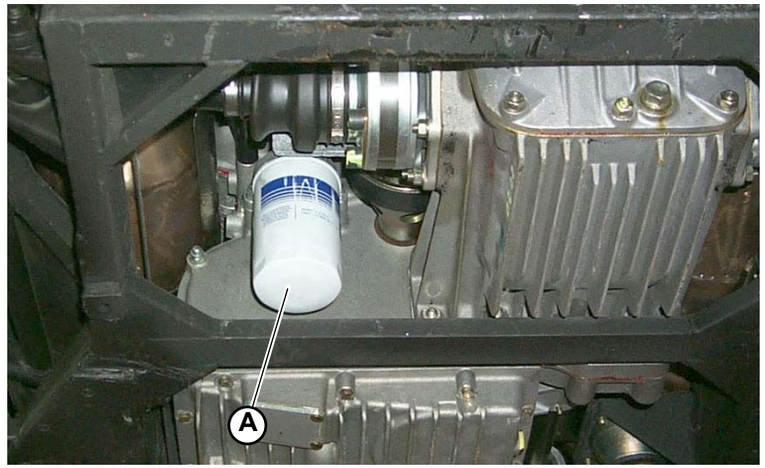

Fig.1

® Automobili Lamborghini S.p.A.
The information and procedures published below are strictly confidential and exclusively for the Lamborghini Dealer Network and Authorized Service Points. All copyrights are property of Automobili Lamborghini S.p.A based on copyright law. All of the PDF chapters in the WEB workshop manuals described below are based on information available at the time of publication. The company reserves the right to make updates and modifications. The following are prohibited: reprinting, reproduction, forwarding to unauthorized people and/or third parties, and translation, including partial, without written authorization from Automobili Lamborghini S.p.A.

Oil filter assembly

- Moisten the rubber seal of the new filter (**A-Fig.1**) with engine oil and install it using the special tool; **tightening torque (000800-11b).**

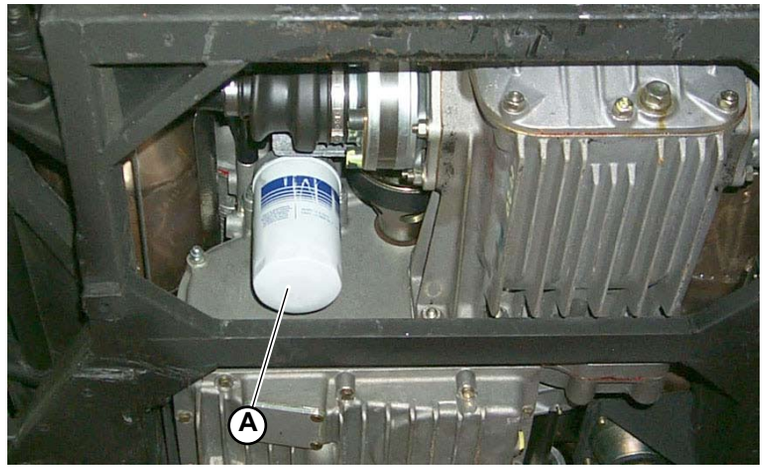

Fig.1

® Automobili Lamborghini S.p.A.
The information and procedures published below are strictly confidential and exclusively for the Lamborghini Dealer Network and Authorized Service Points. All copyrights are property of Automobili Lamborghini S.p.A based on copyright law. All of the PDF chapters in the WEB workshop manuals described below are based on information available at the time of publication. The company reserves the right to make updates and modifications. The following are prohibited: reprinting, reproduction, forwarding to unauthorized people and/or third parties, and translation, including partial, without written authorization from Automobili Lamborghini S.p.A.

CO and HC contents check

Proceed as follows to check the CO and HC contents:

- Stop the engine and start it again;
- Turn the engine for at least two minutes at 1800/2000 rpm;
- Check that the coolant and air temperature values of the two cylinder banks are at least 73°C and 30°C respectively;
- Make sure that the cooling fans are on (the fans should start up at least three times if the outdoor temperature is lower than 20°C) and that the air conditioning system compressor is off (select maximum temperature);
- Sample exhaust gas from the specific vents (**A-Fig. 1**).
  Check that the CO and HC contents are respectively:

CO < 1.0 %
HC < 500 ppm.

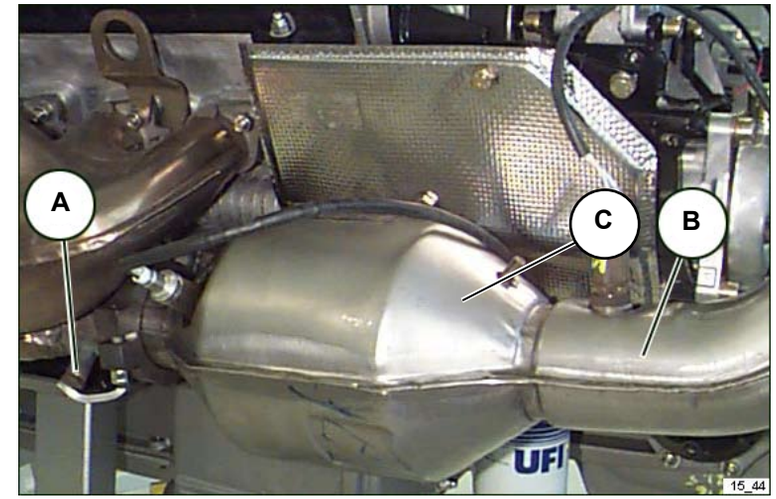

Fig.1

A.	CO vent
B.	Exhaust manifold
C.	Catalyst

® Automobili Lamborghini S.p.A.
The information and procedures published below are strictly confidential and exclusively for the Lamborghini Dealer Network and Authorized Service Points. All copyrights are property of Automobili Lamborghini S.p.A based on copyright law. All of the PDF chapters in the WEB workshop manuals described below are based on information available at the time of publication. The company reserves the right to make updates and modifications. The following are prohibited: reprinting, reproduction, forwarding to unauthorized people and/or third parties, and translation, including partial, without written authorization from Automobili Lamborghini S.p.A.

- The CO content at the exhaust terminals, on the other hand, should be included in the range from 0.0 to 0.2%.
  This procedure is used to check
  whether the catalytic converters are working, but cannot demonstrate the complete efficiency of the devices;
- Check idle speed by means of LDAS 32, making sure that the self-adjusting system is working properly;
- Turn the engine off.

STOP **Pay the utmost attention to exhaust system components while checking and adjusting the engine idle speed and checking the CO and HC contents because the parts may be very hot.**

® Automobili Lamborghini S.p.A.
The information and procedures published below are strictly confidential and exclusively for the Lamborghini Dealer Network and Authorized Service Points. All copyrights are property of Automobili Lamborghini S.p.A based on copyright law. All of the PDF chapters in the WEB workshop manuals described below are based on information available at the time of publication. The company reserves the right to make updates and modifications. The following are prohibited: reprinting, reproduction, forwarding to unauthorized people and/or third parties, and translation, including partial, without written authorization from Automobili Lamborghini S.p.A.

Catalytic converter disassembly

Preliminary operations

- Lift the vehicle on the car lift **(000000)**.
- Disassemble the black plastic rear grille **(081303)**.
- Disassemble the engine hood **(082703)**.
- Disassemble the silencer safety grid **(025103)**.
- Disassemble the spoiler above the silencer **(082703)**.
- Disassemble the silencer guard **(025103)**.
- Disassemble the two exhaust terminals **(025103)**.
- Disassemble the four supports that secure the silencer to the chassis **(025103)**.
- Free the two pipes from the catalytic converters that connect the silencer to the catalytic converters themselves, removing the clamps **(025103)**.
- Remove the four oxygen sensors **(025303)**.
- Remove the two catalytic converter temperature sensors **(025403)**.

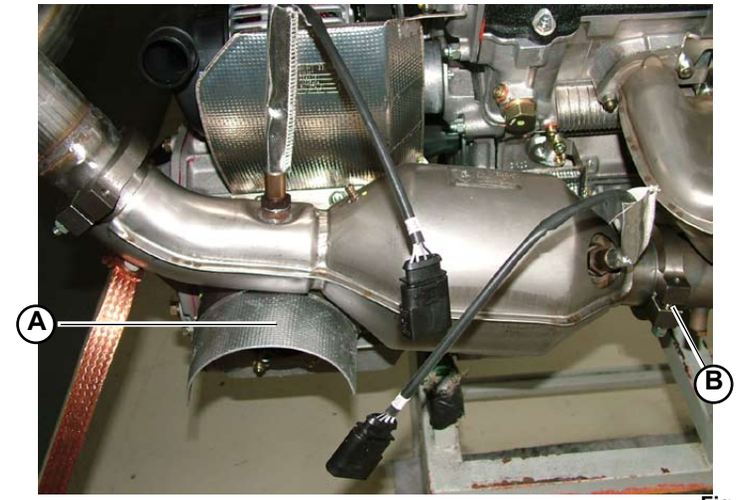

Fig.1

Catalytic converter disassembly

1. Disassemble the heat-proof panel (**A-Fig.1**) under the right catalytic converter.

2. Free the catalytic converter from the rest of the engine unit by removing the clamps (**B-Fig.1/2**).

3. Extract the catalytic converter.

Repeat the same operations for the left catalytic converter.

Fig.2

® Automobili Lamborghini S.p.A.
The information and procedures published below are strictly confidential and exclusively for the Lamborghini Dealer Network and Authorized Service Points. All copyrights are property of Automobili Lamborghini S.p.A based on copyright law. All of the PDF chapters in the WEB workshop manuals described below are based on information available at the time of publication. The company reserves the right to make updates and modifications. The following are prohibited: reprinting, reproduction, forwarding to unauthorized people and/or third parties, and translation, including partial, without written authorization from Automobili Lamborghini S.p.A.

Catalytic converters assembly

1. Connect the right catalytic converter to the rest of the engine unit using the relative clamp (**A-Fig.1/2**).

2. Assemble the heat-proof panel (**B-Fig.2**) under the right catalytic converter.

Repeat the same operations for the left catalytic converter.

- Connect the two temperature sensors to the catalytic converters **(025405)**.
- Connect the four oxygen sensors to the catalytic converters **(025305)**.
- Connect the silencer to the catalytic converters using the provided pipes with clamps **(025105)**.
- Assemble the silencer's four supports onto the chassis **(025105)**.
- Assemble the two exhaust terminals **(025105)**.
- Assemble the silencer guard **(025105)**.
- Assemble the rear hood located above the silencer.
- Assemble the silencer safety grid **(025105)**.
- Assemble the engine hood **(082705)**.
- Assemble the black plastic rear grille **(081305)**.

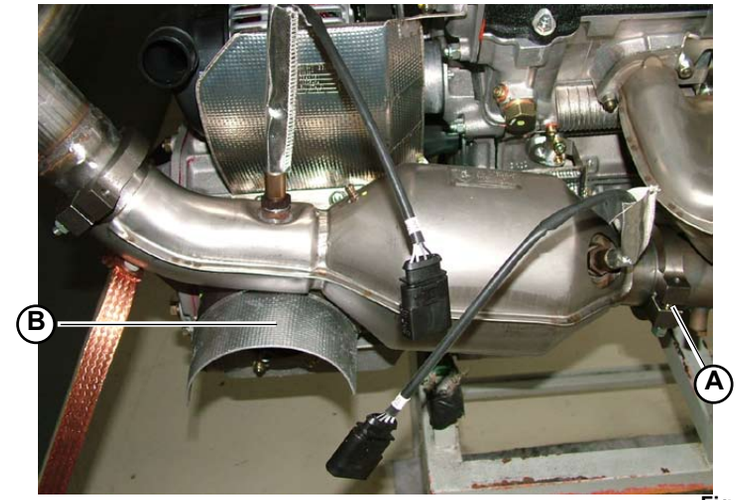

Fig.1

Fig.2

® Automobili Lamborghini S.p.A.
The information and procedures published below are strictly confidential and exclusively for the Lamborghini Dealer Network and Authorized Service Points. All copyrights are property of Automobili Lamborghini S.p.A based on copyright law. All of the PDF chapters in the WEB workshop manuals described below are based on information available at the time of publication. The company reserves the right to make updates and modifications. The following are prohibited: reprinting, reproduction, forwarding to unauthorized people and/or third parties, and translation, including partial, without written authorization from Automobili Lamborghini S.p.A.

Air filter cartridge disassembly

Preliminary operations

- Disassemble the engine hood support piston **(082703)**.
- Disassemble the silencer safety grid **(025103)**.
- Disassemble the side carbon bulkhead **(081303)**.

Air filter cartridge disassembly

1. Release the air pipes (**A-Fig.1**) from the engine, removing the clamps (**B-Fig.1**) that hold them in place.
2. Unscrew the screws (**D-Fig.3**) that secure the filter box cover (**C-Fig.3**).
3. Remove the air filter cartridge (**E-Fig.3**).

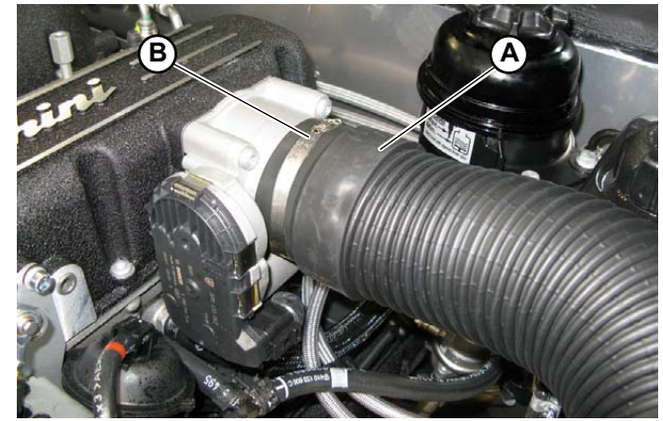

Fig.1

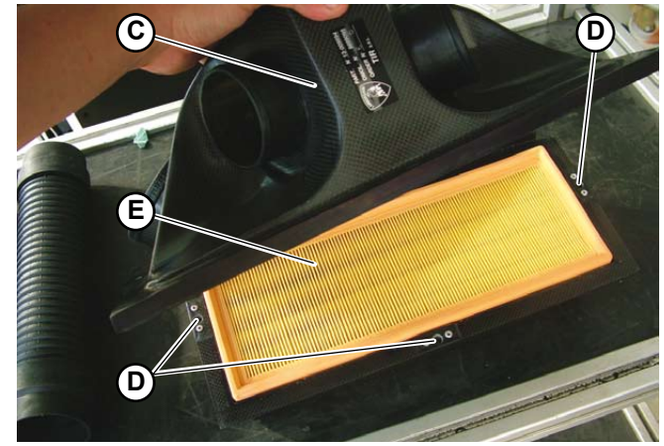

Fig.2

® Automobili Lamborghini S.p.A.
The information and procedures published below are strictly confidential and exclusively for the Lamborghini Dealer Network and Authorized Service Points. All copyrights are property of Automobili Lamborghini S.p.A based on copyright law. All of the PDF chapters in the WEB workshop manuals described below are based on information available at the time of publication. The company reserves the right to make updates and modifications. The following are prohibited: reprinting, reproduction, forwarding to unauthorized people and/or third parties, and translation, including partial, without written authorization from Automobili Lamborghini S.p.A.

Air filter cartridge assembly

1. Insert the air filter cartridge (**A-Fig.1**).

2. Secure the filter box cover (**B-Fig.1**) using the provided screws (**C-Fig.1**).

3. Connect the air pipes (**D-Fig.3**) to the engine using the clamps (**E-Fig.3**).

- Install the side carbon bulkhead **(081305)**.
- Install the silencer safety grid **(025105)**.
- Install the hood support piston **(082705)**.

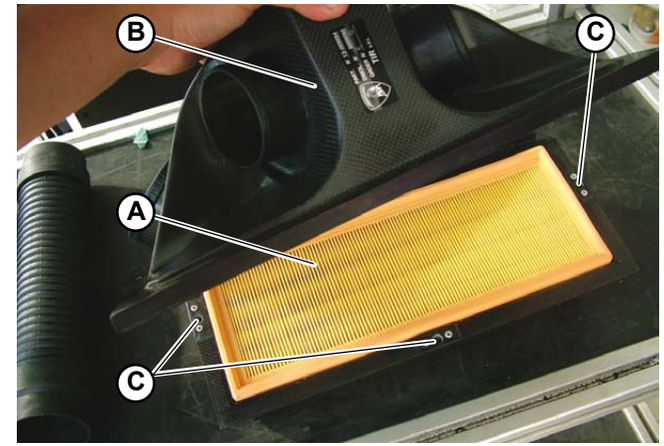

Fig.1

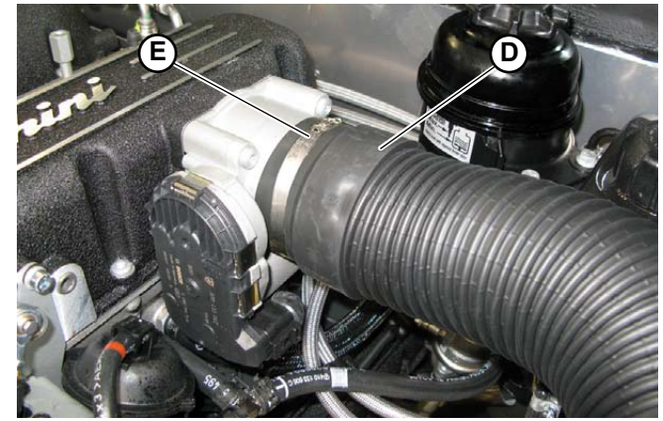

Fig.2

® Automobili Lamborghini S.p.A.
The information and procedures published below are strictly confidential and exclusively for the Lamborghini Dealer Network and Authorized Service Points. All copyrights are property of Automobili Lamborghini S.p.A based on copyright law. All of the PDF chapters in the WEB workshop manuals described below are based on information available at the time of publication. The company reserves the right to make updates and modifications. The following are prohibited: reprinting, reproduction, forwarding to unauthorized people and/or third parties, and translation, including partial, without written authorization from Automobili Lamborghini S.p.A.

Clutch / Flywheel

The clutch is the dry, single plate type with flexible coupling and diaphragm spring.
The mechanism is the thrusting type.
A thrust bearing releases the clutch with an hydraulic control by means of a device inside the clutch bell.

Clutch assembly (Fig.1)	
A.	Flywheel
B.	Clutch disk
C.	Pressure plate assembly
D.	Clutch sleeve and thrust bearing assembly
E.	Clutch pump
F.	Clutch bleeder
G.	Antirotation bar hold

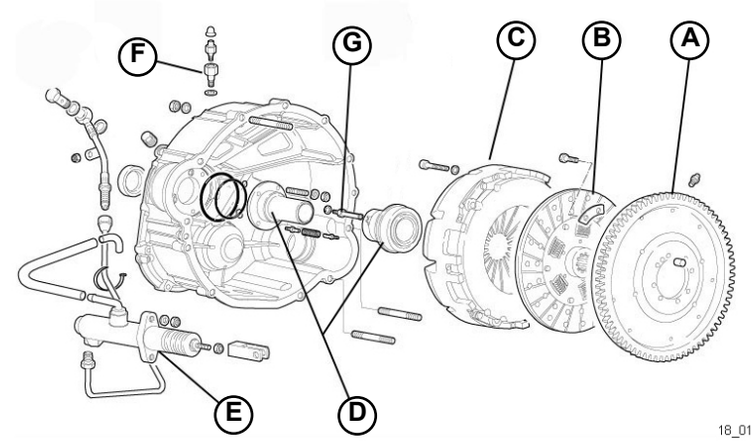

Fig.1

® Automobili Lamborghini S.p.A.
The information and procedures published below are strictly confidential and exclusively for the Lamborghini Dealer Network and Authorized Service Points. All copyrights are property of Automobili Lamborghini S.p.A based on copyright law. All of the PDF chapters in the WEB workshop manuals described below are based on information available at the time of publication. The company reserves the right to make updates and modifications. The following are prohibited: reprinting, reproduction, forwarding to unauthorized people and/or third parties, and translation, including partial, without written authorization from Automobili Lamborghini S.p.A.

Type	Dry, single plate
Gasket outer diameter	272
Gasket inner diameter	165
Clutch disk thickness (with 12000 N load)	7.7
Max. disk wear	1.5
Thrust bearing max. stroke	8.5 ± 1

Flywheel	
Flywheel thickness	35.00 ÷ 35.25
Max. reduction thickness	1
Surface roughness	1.6 Ra

Clutch pump	
Piston bore	19.05
Total stroke	33.00

® Automobili Lamborghini S.p.A.
The information and procedures published below are strictly confidential and exclusively for the Lamborghini Dealer Network and Authorized Service Points. All copyrights are property of Automobili Lamborghini S.p.A based on copyright law. All of the PDF chapters in the WEB workshop manuals described below are based on information available at the time of publication. The company reserves the right to make updates and modifications. The following are prohibited: reprinting, reproduction, forwarding to unauthorized people and/or third parties, and translation, including partial, without written authorization from Automobili Lamborghini S.p.A.

Clutch adjustment

Adjust the brake pedal leaving a clearance of approx. 1 mm, then align the clutch pedal with the brake one.
Periodically bleed air off the clutch hydraulic circuit through the screw on the clutch bell.

® Automobili Lamborghini S.p.A.
The information and procedures published below are strictly confidential and exclusively for the Lamborghini Dealer Network and Authorized Service Points. All copyrights are property of Automobili Lamborghini S.p.A based on copyright law. All of the PDF chapters in the WEB workshop manuals described below are based on information available at the time of publication. The company reserves the right to make updates and modifications. The following are prohibited: reprinting, reproduction, forwarding to unauthorized people and/or third parties, and translation, including partial, without written authorization from Automobili Lamborghini S.p.A.

This section describes the following disassembly operations:

A. Clutch disassembly
B. Clutch thrust bearing disassembly
C. Disassembling the flywheel

Preliminary Operations

- To reach the clutch, remove the engine **(010003)** - gearbox assembly **(030103)** from the car.

A. Clutch disassembly

1. Unscrew the disk pusher socket screws (**A-Fig.1**).
2. Disassemble the disk pusher (**B-Fig.1**).

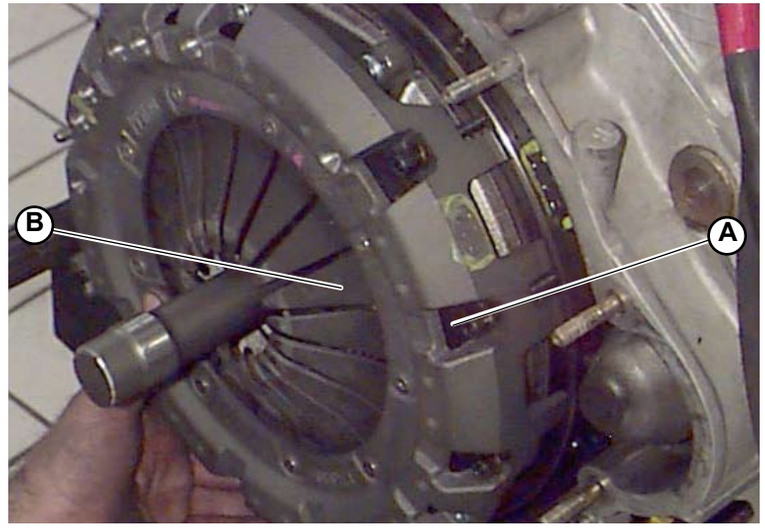

Fig.1

® Automobili Lamborghini S.p.A.
The information and procedures published below are strictly confidential and exclusively for the Lamborghini Dealer Network and Authorized Service Points. All copyrights are property of Automobili Lamborghini S.p.A based on copyright law. All of the PDF chapters in the WEB workshop manuals described below are based on information available at the time of publication. The company reserves the right to make updates and modifications. The following are prohibited: reprinting, reproduction, forwarding to unauthorized people and/or third parties, and translation, including partial, without written authorization from Automobili Lamborghini S.p.A.

B. Clutch Thrust Bearing Disassembly

1. disconnect the clutch hydraulic pipe and close its end;
2. unscrew the anti-rotation bar hold and remove the clutch thrust bearing (**C-Fig.2**). Be careful not to lose the springs;

Check the clutch sleeve: if the working surface is damaged, unscrew the three fastening screws and replace it. Replace the 3 underlying O-rings.

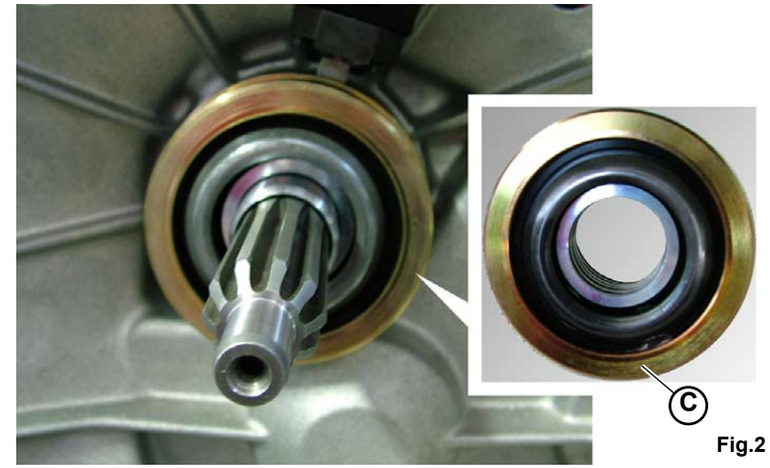

Fig.2

C. Disassembling the flywheel

1. Free the bolts from the sheet metal guards (**D-Fig.3**).
2. Unscrew the bolts (**E-Fig.3**) and remove the sheet metal guards.
3. Remove the flywheel (**F-Fig.3**).

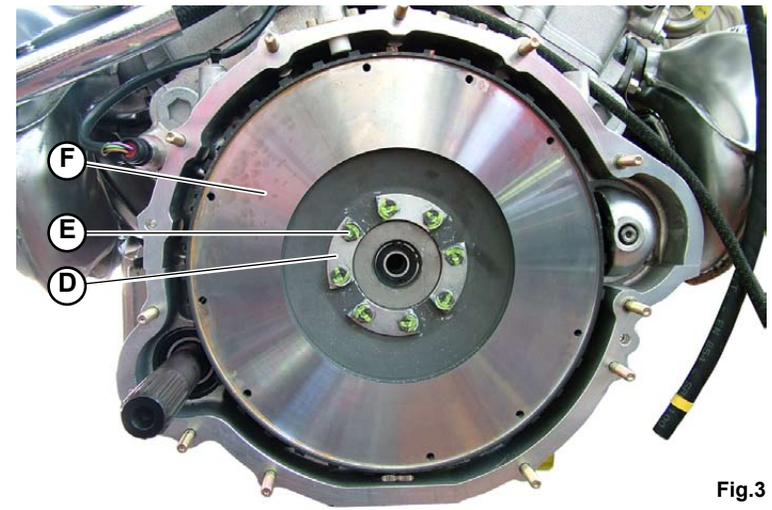

Fig.3

® Automobili Lamborghini S.p.A.
The information and procedures published below are strictly confidential and exclusively for the Lamborghini Dealer Network and Authorized Service Points. All copyrights are property of Automobili Lamborghini S.p.A based on copyright law. All of the PDF chapters in the WEB workshop manuals described below are based on information available at the time of publication. The company reserves the right to make updates and modifications. The following are prohibited: reprinting, reproduction, forwarding to unauthorized people and/or third parties, and translation, including partial, without written authorization from Automobili Lamborghini S.p.A.

The present section contains the following assembly operations:

A. Assembling the flywheel
B. Clutch thrust bearing assembly
C. Clutch assembly

A. Assembling the flywheel

1. Position the flywheel (**A-Fig.1**).
2. Position the new sheet metal guards (**B-Fig.1**).
3. Position the flywheel using the bolts (**C-Fig.1**).
   Bolt attachment: tightening torque (000800-31c).

- **Use the new bolts in the kit to secure the flywheel.**
- **If only the flywheel (or the pressure plate) is being replaced, the clutch must be pre-balanced.**

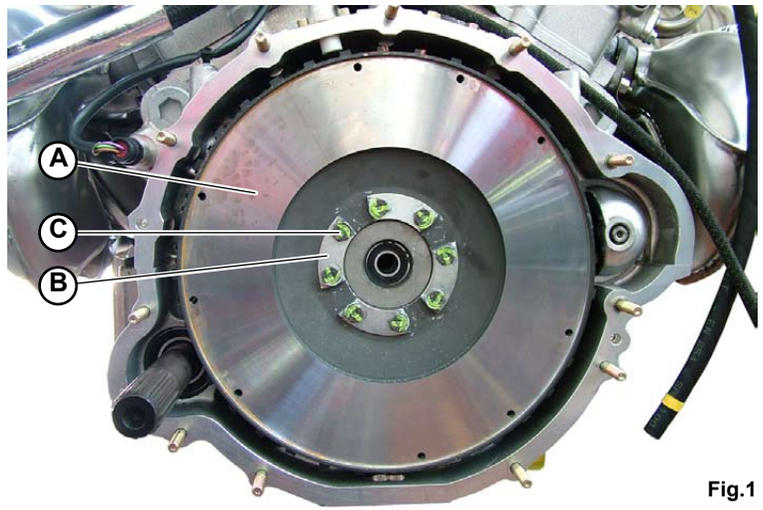

Fig.1

B. Clutch thrust bearing assembly

1. Replace the clutch sleeve: Position the three O-rings and tighten the three mounting screws; **tightening torque (000800-8b)**.
2. Assemble the clutch thrust bearing (**D-Fig.2**), tightening the antirotation bar hold. Be careful not to lose the springs; **tightening torque (000800-5c)**.
3. Reconnect the hydraulic pipes to the clutch.

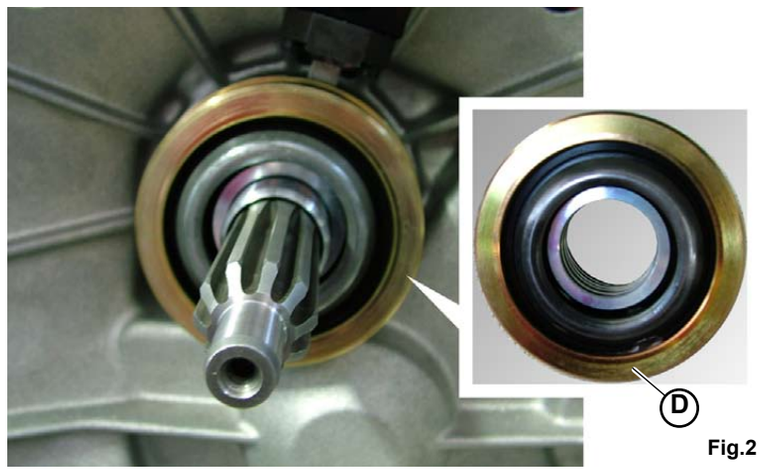

Fig.2

® Automobili Lamborghini S.p.A.
The information and procedures published below are strictly confidential and exclusively for the Lamborghini Dealer Network and Authorized Service Points. All copyrights are property of Automobili Lamborghini S.p.A based on copyright law. All of the PDF chapters in the WEB workshop manuals described below are based on information available at the time of publication. The company reserves the right to make updates and modifications. The following are prohibited: reprinting, reproduction, forwarding to unauthorized people and/or third parties, and translation, including partial, without written authorization from Automobili Lamborghini S.p.A.

C. Clutch assembly

1. Position the pressure plate (**E-Fig.3**) by lining up the balancing notches on the pressure plate's edge and the flywheel and check for exact centering of the pressure plate with respect to the flywheel (the striking surfaces of the pressure plate on the flywheel must be internal and equidistant from the edge of the flywheel).

2. Tighten the pressure plate's socket head screws;
   pressure plate screws: **tightening torque (000800-1c)**.

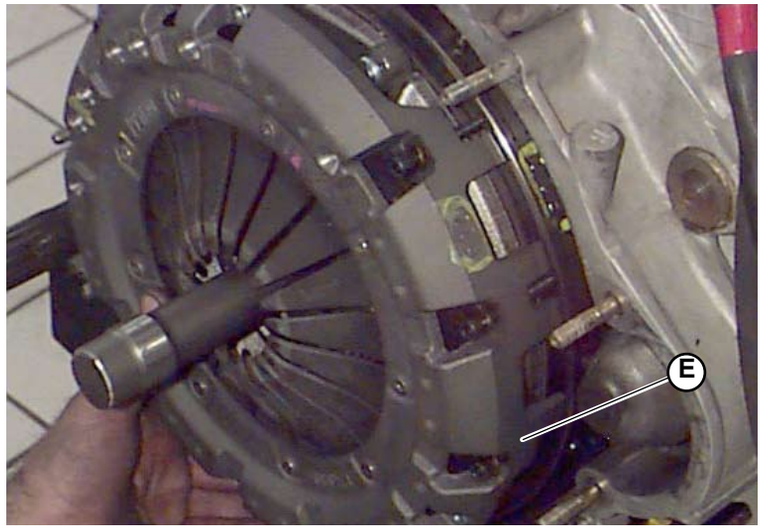

Fig.3

3. Using a suitable tool (**F-Fig.4**), rotate the engine and check the air gap between the flywheel pins and engine timing sensor; this value must be equal to 0.5 – 1.0 mm.

When there is an E-gear, use the LARA-AS system and proceed with reading and writing of the new clutch (measurement file).

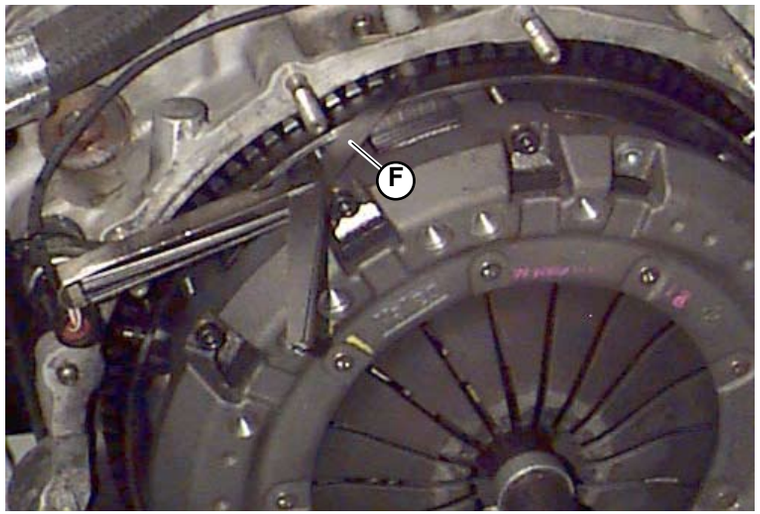

Fig.4

® Automobili Lamborghini S.p.A.
The information and procedures published below are strictly confidential and exclusively for the Lamborghini Dealer Network and Authorized Service Points. All copyrights are property of Automobili Lamborghini S.p.A based on copyright law. All of the PDF chapters in the WEB workshop manuals described below are based on information available at the time of publication. The company reserves the right to make updates and modifications. The following are prohibited: reprinting, reproduction, forwarding to unauthorized people and/or third parties, and translation, including partial, without written authorization from Automobili Lamborghini S.p.A.

Clutch bleeding

Preliminary operations

- Lift the vehicle on the car lift **(000000)**.

Bleeding

1. One person remains inside the vehicle and steadily pushes the clutch pedal.
2. The pressing of the pedal causes opening of the circuit and repumping inside the pipes.
3. Repeat this operation until unemulsified oil comes out (**A-Fig.1**).

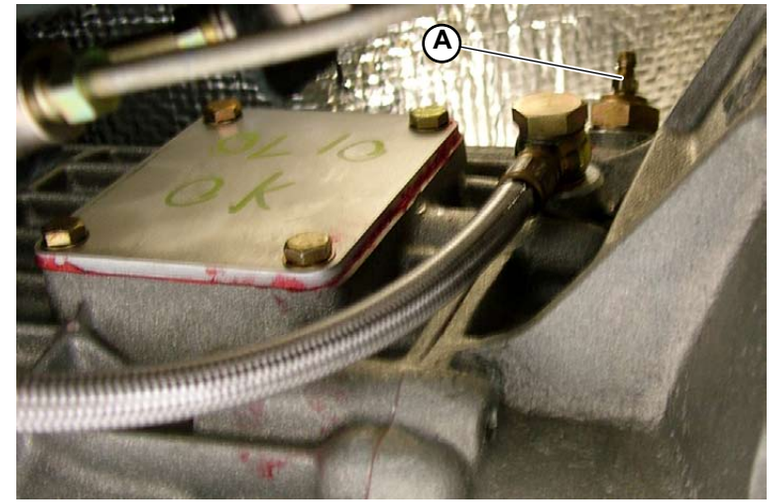

Fig.1

® Automobili Lamborghini S.p.A.
The information and procedures published below are strictly confidential and exclusively for the Lamborghini Dealer Network and Authorized Service Points. All copyrights are property of Automobili Lamborghini S.p.A based on copyright law. All of the PDF chapters in the WEB workshop manuals described below are based on information available at the time of publication. The company reserves the right to make updates and modifications. The following are prohibited: reprinting, reproduction, forwarding to unauthorized people and/or third parties, and translation, including partial, without written authorization from Automobili Lamborghini S.p.A.

After installing a new clutch disk, it is necessary to run-in the clutch as follows:

Phase one:

1. Make 5 slow starts in first gear, limit the clutch slippage to the minimum necessary and do not skid the tires. Repeat the procedure, also starting in second gear. After every start, drive for a minimum of 100 m before repeating the procedure.
2. After the starts, (while the car is moving) change up from second to sixth gear (passing through all the intermediate gears) five times. Do not exceed 4000 rpm. Afterwards, change down from sixth gear to second (passing through all the intermediate gears), without using the first gear.
3. While in second gear, take the car up to 100 km/h and then release the accelerator. When you release the accelerator, press and release the clutch pedal by degrees. Repeat the entire procedure three times.
4. Avoid “jump starts”; do not suddenly release the clutch while the car is moving (whether in first gear or changing from one gear to another).

Phase two:

Carry out the following cycles in first gear while the vehicle is moving:

1. 8 progressive accelerations in first gear from 2000 to 4000 rpm.
2. 8 progressive accelerations in first gear from 2000 to 5500 rpm.
3. 8 progressive accelerations in first gear from 2000 to 7000 rpm.

Repeat the above procedure in the other gears only if the car is used on a test track and if compatible with any speed limits and safety criteria.

® Automobili Lamborghini S.p.A.
The information and procedures published below are strictly confidential and exclusively for the Lamborghini Dealer Network and Authorized Service Points. All copyrights are property of Automobili Lamborghini S.p.A based on copyright law. All of the PDF chapters in the WEB workshop manuals described below are based on information available at the time of publication. The company reserves the right to make updates and modifications. The following are prohibited: reprinting, reproduction, forwarding to unauthorized people and/or third parties, and translation, including partial, without written authorization from Automobili Lamborghini S.p.A.

Checking the clutch thickness

1. Connect the OBD2 (**A-Fig.1**) outlet to the port of the “LARA-AS” software system (**B-Fig.1**) on the driver side under the steering wheel **(109000)**.

To establish the connection between the control unit and the PC, use the **BASIC.XS** cable **(000200-48a)** and the cable for LARA-AS diagnostics interface **(000200-48b)**.

3. Turn the vehicle’s ignition key to the first position so that electrical power arrives at the outlet.
4. Check the clutch thickness on the connected CPU.

If clutch thickness reading measurement is used, the system automatically provides the difference between the channels where the clutch thickness is indicated.
The difference must be calculated manually only when all of the SNAP SHOT parameters are read:

- **The current clutch thickness is supplied on channel 19.**
- **The initial clutch thickness at the time of assembly is supplied on channel 27.**

The difference between the initial thickness and the current thickness must never be more than 7.6 mm.
If the difference is more than 7.6 mm, the clutch itself must be immediately replaced.

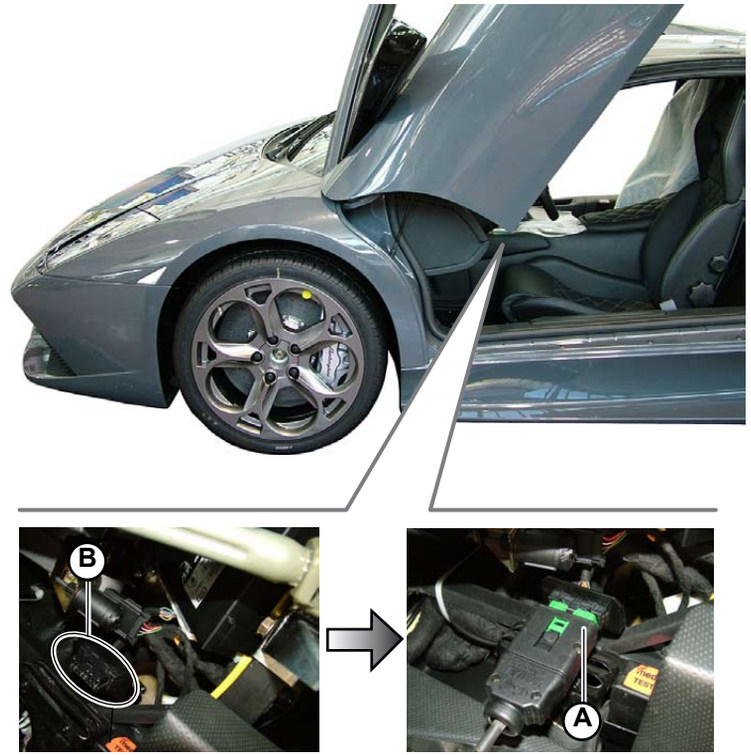

Fig.1

® Automobili Lamborghini S.p.A.
The information and procedures published below are strictly confidential and exclusively for the Lamborghini Dealer Network and Authorized Service Points. All copyrights are property of Automobili Lamborghini S.p.A based on copyright law. All of the PDF chapters in the WEB workshop manuals described below are based on information available at the time of publication. The company reserves the right to make updates and modifications. The following are prohibited: reprinting, reproduction, forwarding to unauthorized people and/or third parties, and translation, including partial, without written authorization from Automobili Lamborghini S.p.A.

Checking the hydraulic oil level

A label indicating the oil level check is fitted on the tank (Fig.2).

1. Unscrew the cap (**A-Fig.2**), clean the dipstick of all traces of oil and retighten it.
2. Unscrew the cap and make sure that the hydraulic oil level is not above the **MAX** mark on the dipstick (**Fig.3**); if necessary, re-establish the correct level by removing the excess oil with a syringe.
3. Visually check inside the tank and make sure that the oil level is not lower than the internal white diaphragm (**MIN-Fig.3**); if necessary, top up exclusively using the recommended type of hydraulic oil.

   Type of recommended hydraulic oil: TUTELA CS SPEED

4. Tighten the cap (**A-Fig.2**).

Fig.2

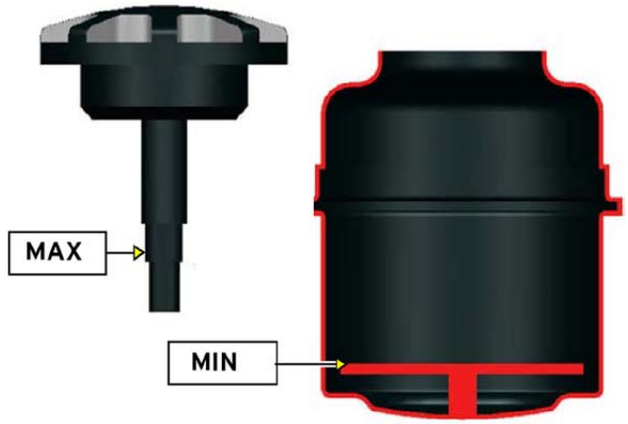

Fig.3

® Automobili Lamborghini S.p.A.
The information and procedures published below are strictly confidential and exclusively for the Lamborghini Dealer Network and Authorized Service Points. All copyrights are property of Automobili Lamborghini S.p.A based on copyright law. All of the PDF chapters in the WEB workshop manuals described below are based on information available at the time of publication. The company reserves the right to make updates and modifications. The following are prohibited: reprinting, reproduction, forwarding to unauthorized people and/or third parties, and translation, including partial, without written authorization from Automobili Lamborghini S.p.A.

Kit E-Gear

In the E-Gear system the clutch slippage can be changed by modifying the P.I.S. (Point of Initial Slip). This operation varies the vehicle's driving style, making it "softer" or "harder".
To carry out this operation, a qualified Lamborghini Service Manager must be contacted who, based on the specific requests, will send a supplement to the "LARA" software to be installed in order to directly intervene on the control unit.

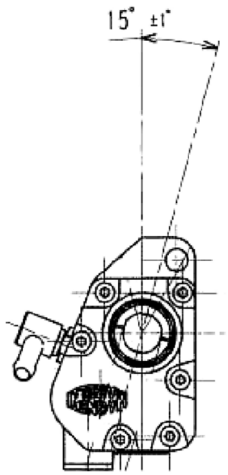

Fig.1

E-gear kit assembly introduction

The position of the hole on the actuator's cardan joint (**Fig.1**) must be in the neutral position between 3rd and 4th gear, otherwise assembly and the settings will be incorrect or impossible to carry out.

Actuator and support assembly

- Assemble the supports (**B-Fig.2** and **C-Fig.2**) on the gearbox using the mounting nuts and bolts (**E-Fig.2** and **F-Fig.2**).

STOP **Important:**
Leave the screws (E-Fig.2 and F-Fig.2) loose (DO NOT TIGHTEN).

- Assemble the actuator (**A-Fig.2**) on the actuator support (**C-Fig.2**) and then attach securely using the mounting screws (**D-Fig.2**).

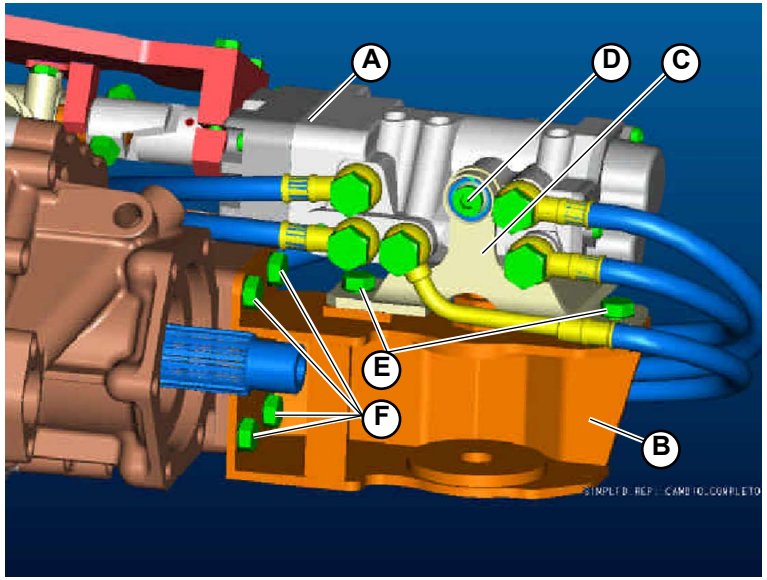

Fig.2

® Automobili Lamborghini S.p.A.
The information and procedures published below are strictly confidential and exclusively for the Lamborghini Dealer Network and Authorized Service Points. All copyrights are property of Automobili Lamborghini S.p.A based on copyright law. All of the PDF chapters in the WEB workshop manuals described below are based on information available at the time of publication. The company reserves the right to make updates and modifications. The following are prohibited: reprinting, reproduction, forwarding to unauthorized people and/or third parties, and translation, including partial, without written authorization from Automobili Lamborghini S.p.A.

Necessary tools:
Adjustment tool for gearbox kit (**000200**)(**A-Fig.3**).

Assemble the tool (**A-Fig.3**) for resetting the Selespeed unit on the gearbox using the four mounting screws (**B-Fig.3**) and the two centering pins (**C-Fig.3**).
Anchor the actuator to the tool using the two mounting screws (**D-Fig.3**) allowing, however, the actuator to rotate (the tool has a circular groove where the actuator must be anchored).
The actuator will therefore be positioned correctly with the gearbox control rod's axle but free to rotate for the next step.

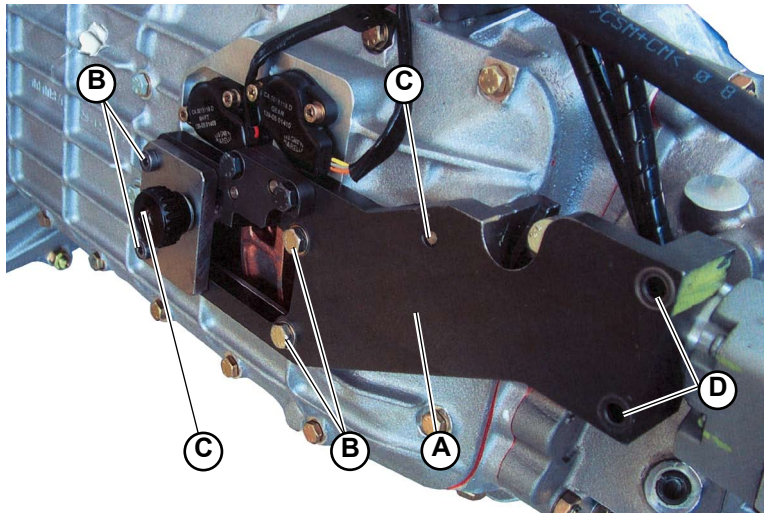

Fig.3

Adjustments:
The following procedures should be used when assembling the E-Gear Kit on the gearbox for the first time.
1. Gearbox support and actuator support adjustment
2. Adjustment for resetting engagement
3. Adjustment for resetting gear shift control rod

The procedures should be applied every time the E-gear kit, gears, gearbox cover, kit supports, and components are disassembled since they compromise resetting the actuator to the gearbox when disassembled.

1. Gearbox support and actuator support adjustment

Move the gearbox support (**E-Fig.4**) toward the actuator support (**F-Fig.4**) until the machined surfaces of the support (**E-Fig.4**) are in perfect contact with the support's surfaces (**F-Fig.4**) (surfaces positioned parallel to each other).
Keep the surfaces in contact and tighten the four mounting nuts (**G-Fig.4**).
Tighten the two mounting screws (**H-Fig.4**) of the actuator support (**F-Fig.4**); **tightening torque (000800-11d)**.

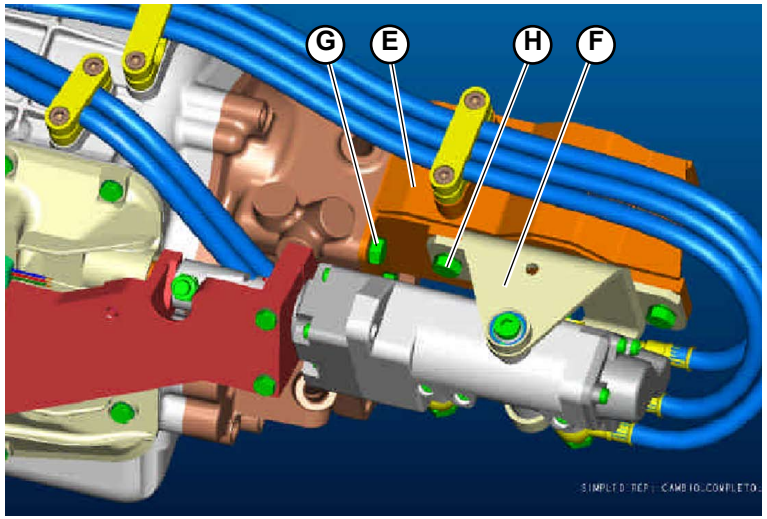

Fig.4

® Automobili Lamborghini S.p.A.
The information and procedures published below are strictly confidential and exclusively for the Lamborghini Dealer Network and Authorized Service Points. All copyrights are property of Automobili Lamborghini S.p.A based on copyright law. All of the PDF chapters in the WEB workshop manuals described below are based on information available at the time of publication. The company reserves the right to make updates and modifications. The following are prohibited: reprinting, reproduction, forwarding to unauthorized people and/or third parties, and translation, including partial, without written authorization from Automobili Lamborghini S.p.A.

2. Adjustment for resetting engagement

Position the finger (**I-Fig.5**) in-between the teeth, inserting shims (**L-Fig.5**) of equal size in both sides.

Leave the finger (**I-Fig.5**) resting on the tool for resetting gear shift control rod (**M-Fig.5**).

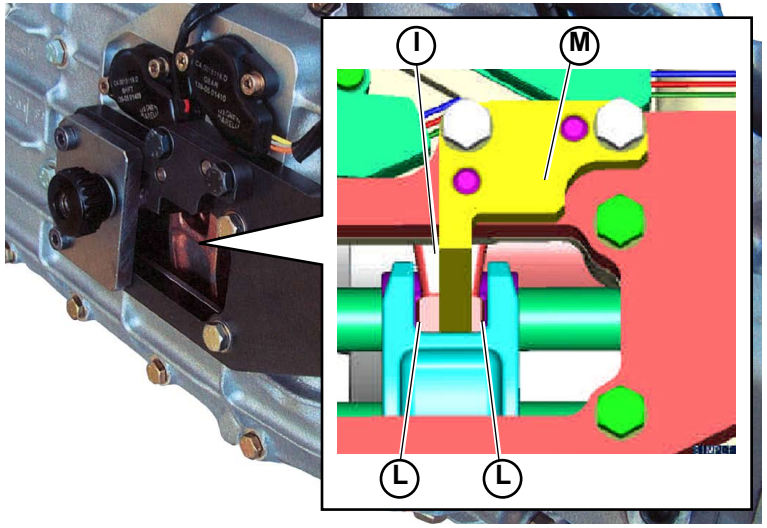

Fig.5

3. Adjustment for resetting gear shift control rod

Remaining in the same condition as in point 2 (Adjustment for resetting engagement), move the actuator cardan joint (**N-Fig.6**) horizontally, resting it on the tool (**O-Fig.6**) (the actuator's engagement travel will be reset).
Gently rotate the cardan joint clockwise without forcing it and then counter-clockwise. Then position it in the middle of the existing clearance (the clearance of the actuator's gear shift control rod will be halved).

Tighten the cardan joint mounting screw (**P-Fig.6**); **tightening torque (000800-8d)**.

STOP **Important:**
Always maintain the conditions in point 2 (Adjustment for resetting engagement) or 3 (Adjustment for resetting gear shift control rod).

Disassemble the tool from the gearbox .

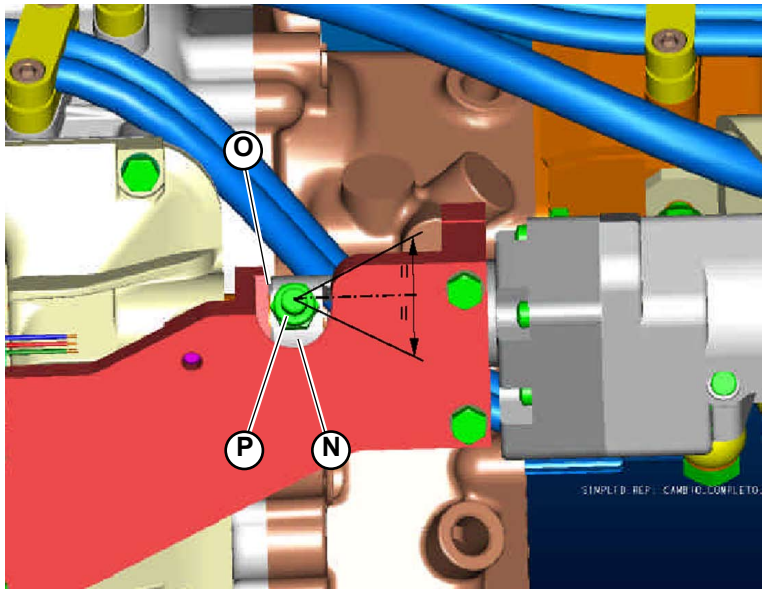

Fig.6

® Automobili Lamborghini S.p.A.
The information and procedures published below are strictly confidential and exclusively for the Lamborghini Dealer Network and Authorized Service Points. All copyrights are property of Automobili Lamborghini S.p.A based on copyright law. All of the PDF chapters in the WEB workshop manuals described below are based on information available at the time of publication. The company reserves the right to make updates and modifications. The following are prohibited: reprinting, reproduction, forwarding to unauthorized people and/or third parties, and translation, including partial, without written authorization from Automobili Lamborghini S.p.A.

When the operation has been completed, externally connect the gear and run the software's measurement files:

- **Run the open solenoid Murcielago MY08-09 file to bleed and reset the system.**
- **Run self-learning Murcielago MY08-09 to automatically calibrate the system.**

To establish the connection between the control unit and the PC, use the BASIC.XS cable (000200-48a) and the cable for LARA-AS diagnostics interface (000200-48b).

CAUTION:
Before running the measurement files:

- **Disconnect the injection control units.**
- **Remove the fuel pump fuses.**
- **Check that there are no loose positives that could cause short circuits.**

Fig.7

® Automobili Lamborghini S.p.A.
The information and procedures published below are strictly confidential and exclusively for the Lamborghini Dealer Network and Authorized Service Points. All copyrights are property of Automobili Lamborghini S.p.A based on copyright law. All of the PDF chapters in the WEB workshop manuals described below are based on information available at the time of publication. The company reserves the right to make updates and modifications. The following are prohibited: reprinting, reproduction, forwarding to unauthorized people and/or third parties, and translation, including partial, without written authorization from Automobili Lamborghini S.p.A.

Disassembling the e-gear actuator

Preliminary operations

- Disassemble the gearbox **(030103)**.

Disassembling the actuator

1. Disassemble the actuator by removing the lower screw (**A-Fig.1**) and the upper screw (**B-Fig.2**) that secure the actuator to the bracket (**C-Fig.2**).
2. Remove the screw (**D-Fig.2**) securing the actuator's joint (**E-Fig.1**).
3. Remove the actuator (**F-Fig.1**).

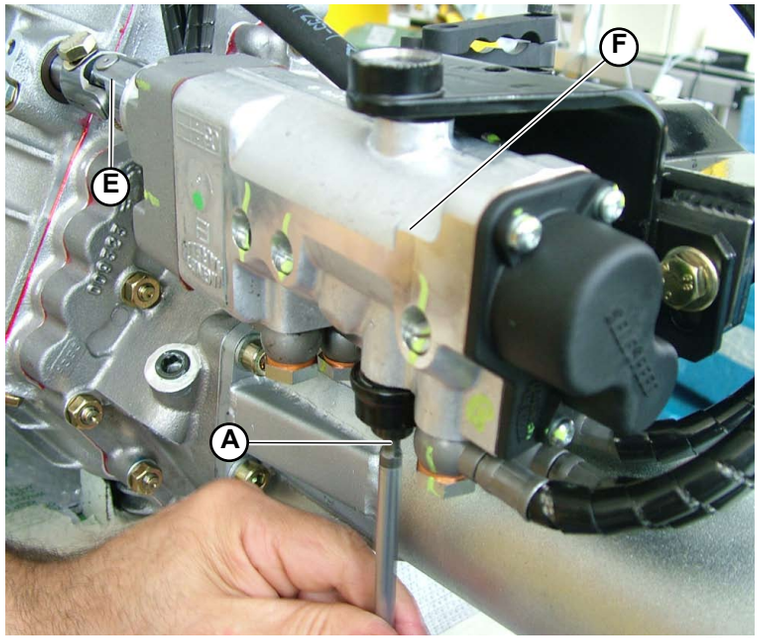

Fig.1

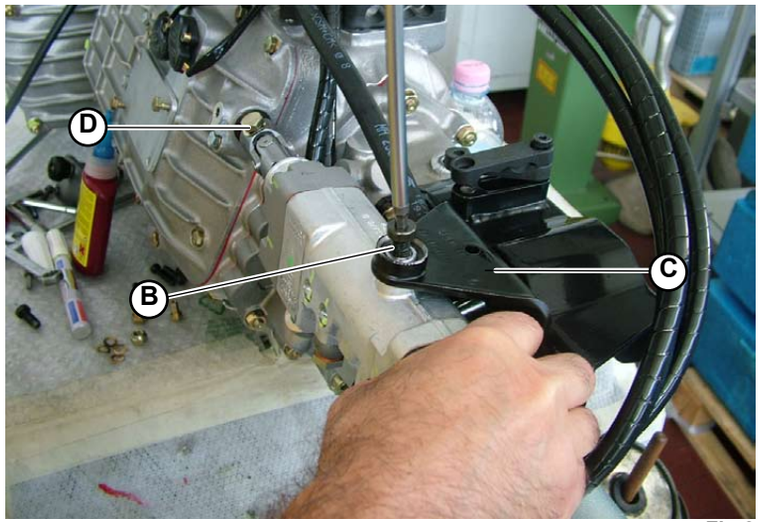

Fig.2

® Automobili Lamborghini S.p.A.
The information and procedures published below are strictly confidential and exclusively for the Lamborghini Dealer Network and Authorized Service Points. All copyrights are property of Automobili Lamborghini S.p.A based on copyright law. All of the PDF chapters in the WEB workshop manuals described below are based on information available at the time of publication. The company reserves the right to make updates and modifications. The following are prohibited: reprinting, reproduction, forwarding to unauthorized people and/or third parties, and translation, including partial, without written authorization from Automobili Lamborghini S.p.A.

Assembling the e-gear actuator

1. Assemble the bracket (**A-Fig.1**) on the gearbox, tightening the 4 screws (**B-Fig.1**).
2. Anchor the bracket (**A-Fig.1**) to the bracket (**C-Fig.1**) using the 2 screws (**D-Fig.1**).

Do not tighten the screws (D-Fig.1). Leave them loose.

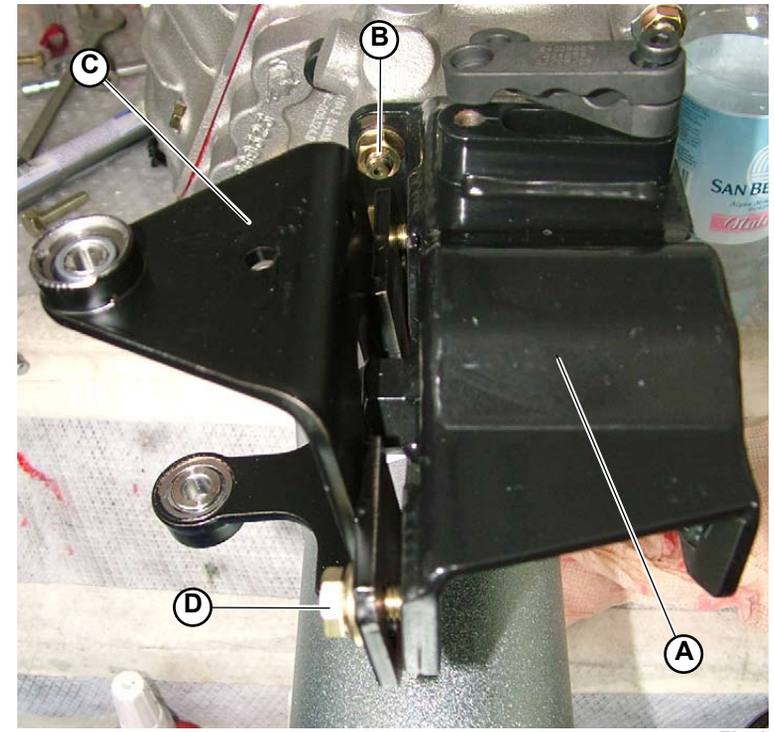

Fig.1

® Automobili Lamborghini S.p.A.
The information and procedures published below are strictly confidential and exclusively for the Lamborghini Dealer Network and Authorized Service Points. All copyrights are property of Automobili Lamborghini S.p.A based on copyright law. All of the PDF chapters in the WEB workshop manuals described below are based on information available at the time of publication. The company reserves the right to make updates and modifications. The following are prohibited: reprinting, reproduction, forwarding to unauthorized people and/or third parties, and translation, including partial, without written authorization from Automobili Lamborghini S.p.A.

3. Position the actuator (**E-Fig.2**) on the bracket (**F-Fig.2**).

4. Secure the actuator's coupling (**G-Fig.2**) using the screw (**H-Fig.3**).

Do not tighten the screw (H-Fig.3). Leave it loose.

5. Secure the actuator to the bracket by tightening the upper screw (**I-Fig.3**) and the lower screw (**L-Fig.2**).

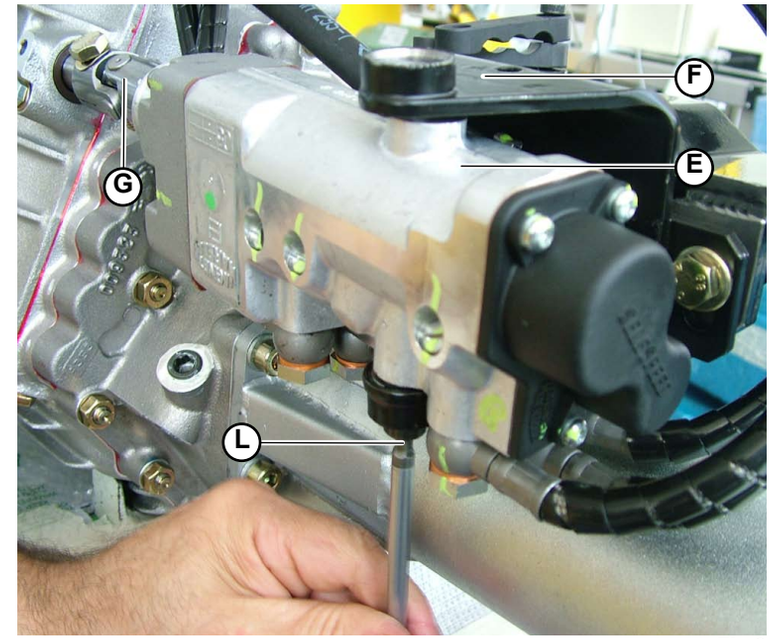

Fig.2

Fig.3

® Automobili Lamborghini S.p.A.
The information and procedures published below are strictly confidential and exclusively for the Lamborghini Dealer Network and Authorized Service Points. All copyrights are property of Automobili Lamborghini S.p.A based on copyright law. All of the PDF chapters in the WEB workshop manuals described below are based on information available at the time of publication. The company reserves the right to make updates and modifications. The following are prohibited: reprinting, reproduction, forwarding to unauthorized people and/or third parties, and translation, including partial, without written authorization from Automobili Lamborghini S.p.A.

6. Assemble the reset tool (**M-Fig.4**) and tighten it using the 4 screws (**N-Fig.4**).

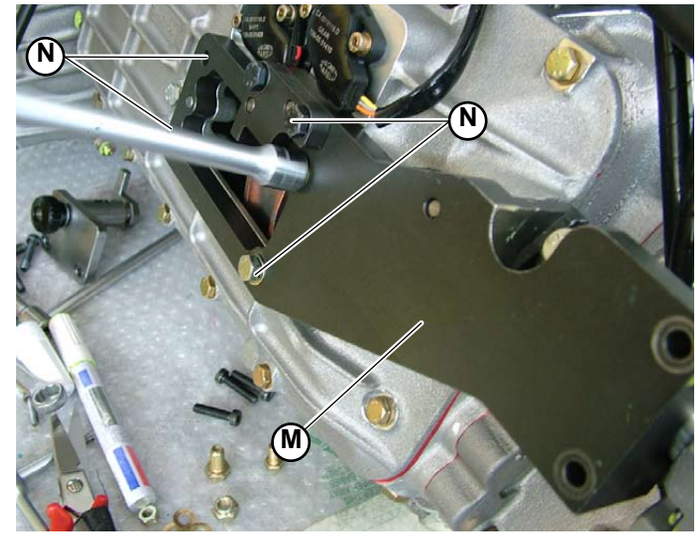

Fig.4

7. Assemble the tooth (**O-Fig.5**) and secure it to the reset tool using the 2 special screws (**P-Fig.5**).

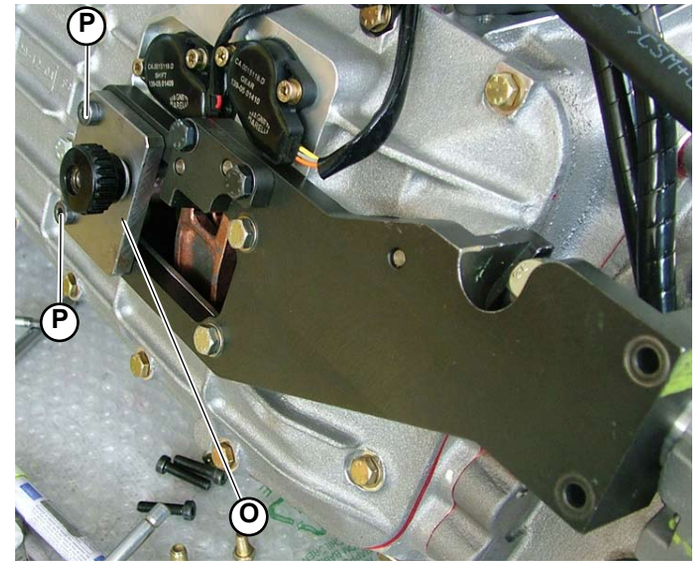

Fig.5

® Automobili Lamborghini S.p.A.
The information and procedures published below are strictly confidential and exclusively for the Lamborghini Dealer Network and Authorized Service Points. All copyrights are property of Automobili Lamborghini S.p.A based on copyright law. All of the PDF chapters in the WEB workshop manuals described below are based on information available at the time of publication. The company reserves the right to make updates and modifications. The following are prohibited: reprinting, reproduction, forwarding to unauthorized people and/or third parties, and translation, including partial, without written authorization from Automobili Lamborghini S.p.A.

8. Secure the reset tool on the coupling using the U-bolt (**Q-Fig.6**), tightening it with the 2 screws (**R-Fig.6**).

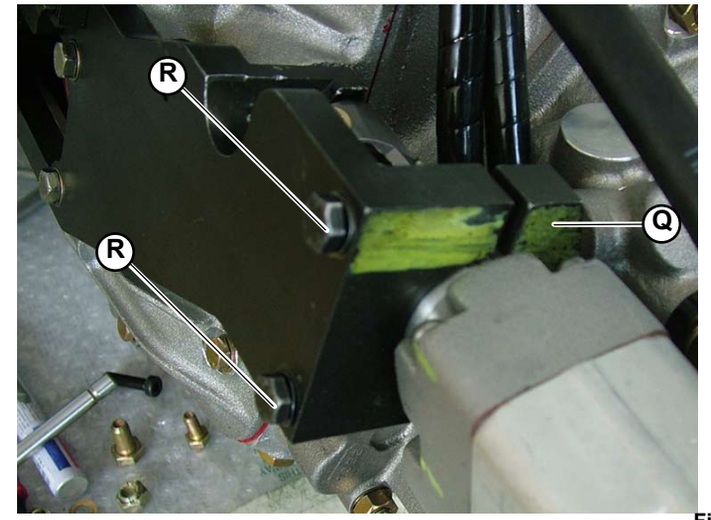

Fig.6

9. Insert the 2 thickness gauges (**S-Fig.7**) and use the tooth's knob (**T-Fig.7**) to obtain the correct thickness.

10. Following correct alignment, tighten the 2 screws (**D-Fig.1**) that secure the bracket (**C-Fig.1**) and tighten the screw (**H-Fig.3**) that secures the coupling (**G-Fig.2**).

11. Remove the 2 thickness gauges (**S-Fig.7**). Disassemble the tooth (**O-Fig.5**) and the reset tool (**M-Fig.4**).

- Assemble the gearbox (030105).

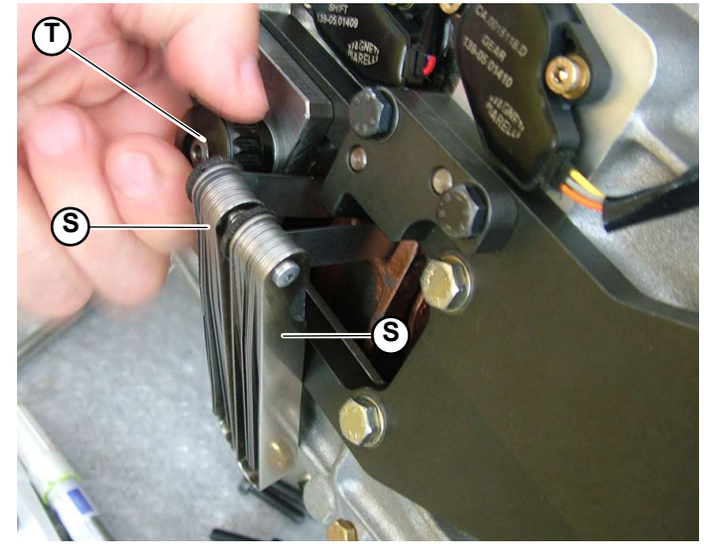

Fig.7

® Automobili Lamborghini S.p.A.
The information and procedures published below are strictly confidential and exclusively for the Lamborghini Dealer Network and Authorized Service Points. All copyrights are property of Automobili Lamborghini S.p.A based on copyright law. All of the PDF chapters in the WEB workshop manuals described below are based on information available at the time of publication. The company reserves the right to make updates and modifications. The following are prohibited: reprinting, reproduction, forwarding to unauthorized people and/or third parties, and translation, including partial, without written authorization from Automobili Lamborghini S.p.A.

Clutch bleeding (E-Gear)

Preliminary operations

- Disassemble the engine safety cover **(081303)**.

Clutch bleeding

1. Connect a pipe (**A-Fig.1**) to the clutch bleeder (**B-Fig.2**) located in the front part of the engine.
2. Place a container for collecting the used oil (**C-Fig.1**) under the end of the pipe.
3. Open the clutch bleeder using the two nuts that secure it (**D-Fig.2**) (tighten the lower nut and loosen the upper nut).
4. Connect the OBD2 outlet (**E-Fig.3**) to the port of the “LARA-AS” software system (**F-Fig.3**) on the driver side under the steering wheel **(109000)**.

To establish the connection between the control unit and the PC, use the **BASIC.XS** cable and the **BASIC.KS** cable **(000200-48a)**.
Use the **LARA-AS system (Measurement file – clutch bleeding).**

5. Turn the vehicle’s ignition key to the first position so that electrical power arrives at the outlet.
6. Start the bleed process through the CPU, opening the circuit.
7. Keep the circuit open 10-15 seconds.
8. After 10-15 seconds stop the operation through the CPU.
9. Repeat the operation two more times (three times altogether), letting the oil drain from the pipe connected to the bleeder.
10. When bleeding has finished, restore the initial conditions.

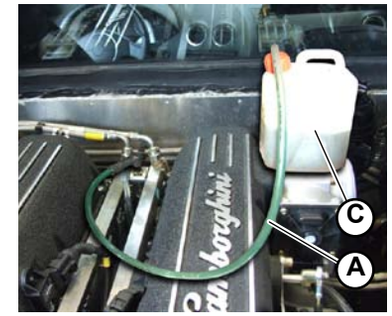

Fig.1

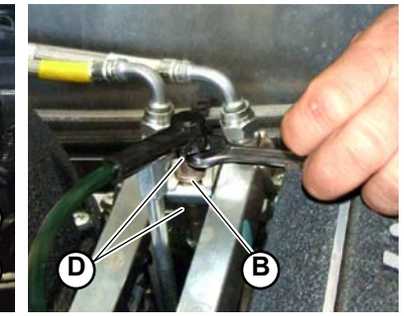

Fig.2

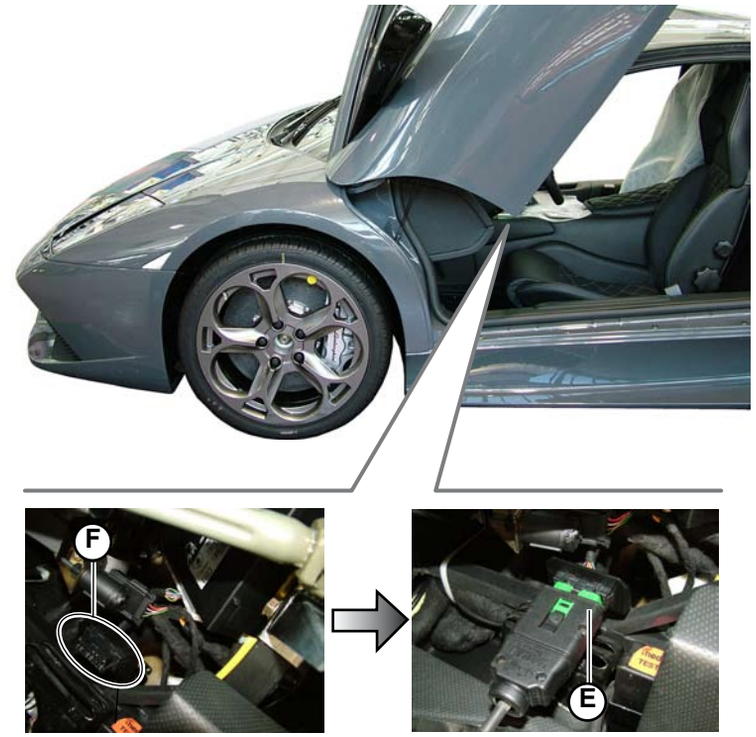

Fig.3

® Automobili Lamborghini S.p.A.
The information and procedures published below are strictly confidential and exclusively for the Lamborghini Dealer Network and Authorized Service Points. All copyrights are property of Automobili Lamborghini S.p.A based on copyright law. All of the PDF chapters in the WEB workshop manuals described below are based on information available at the time of publication. The company reserves the right to make updates and modifications. The following are prohibited: reprinting, reproduction, forwarding to unauthorized people and/or third parties, and translation, including partial, without written authorization from Automobili Lamborghini S.p.A.

Engine Speed and TDC sensor

The sensor is fixed on to the crankcase, engine flywheel side (**Fig.1**).

A.	Casing
B.	Winding
C.	Permanent magnet
D.	Tooth
E.	Air gap

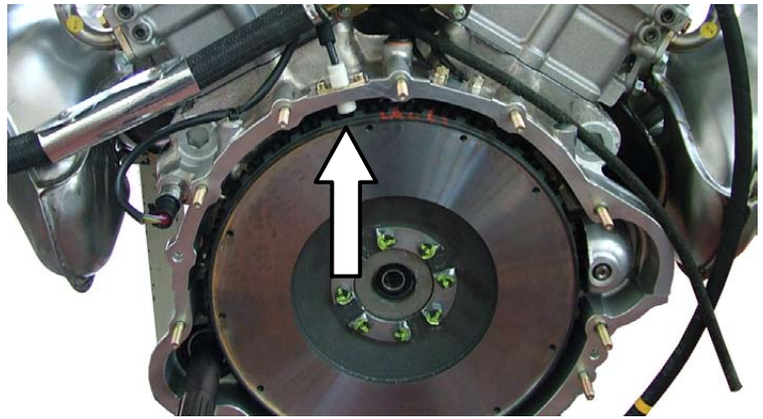

Fig.1

Operating Principle
The sensor consists of a tubular casing (**A-Fig.2**) inside which there is a permanent magnet (**C-Fig.2**)) and an electrical winding (**B-Fig.2**): The magnetic flow created by the magnet (**C-Fig.2**) due to the passage of the phonic wheel teeth, fluctuates according to the air gap variation. These fluctuations induce an electromotive force in the coil (**B-Fig.2**) at the ends of which a positive voltage (tooth facing sensor) and a negative voltage (gap facing the sensor) alternate.The peak value of the output voltage depends, other factors remaining unaltered, on the distance between the sensor and the tooth (air gap).

Air gap: 0.75 ¸ 0.90 [mm]

Note
There are two ways to insert the sensor on the crankcase: Always position it to the left of cylinder bank 1 (**Fig.1**).

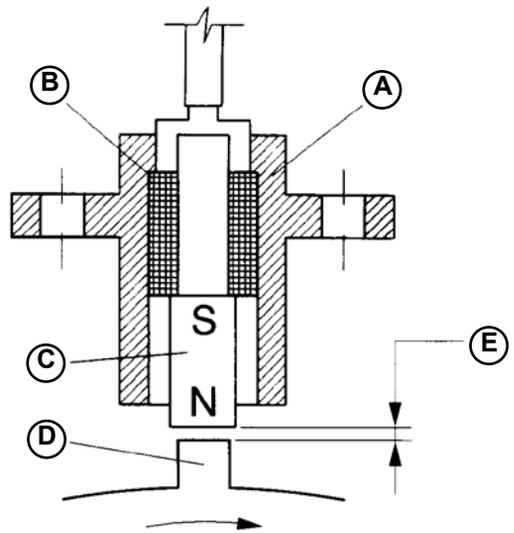

Fig.2

® Automobili Lamborghini S.p.A.
The information and procedures published below are strictly confidential and exclusively for the Lamborghini Dealer Network and Authorized Service Points. All copyrights are property of Automobili Lamborghini S.p.A based on copyright law. All of the PDF chapters in the WEB workshop manuals described below are based on information available at the time of publication. The company reserves the right to make updates and modifications. The following are prohibited: reprinting, reproduction, forwarding to unauthorized people and/or third parties, and translation, including partial, without written authorization from Automobili Lamborghini S.p.A.

VVT System

The engine is equipped with intake and exhaust variable valve timing (VVT). This system optimizes the filling up of the cylinders at different engine speeds improving the torque output and the emission control.

The variable valve timing mechanisms are continuous and activated directly by the solenoid valve; their position is read by a sensor positioned on the cam.

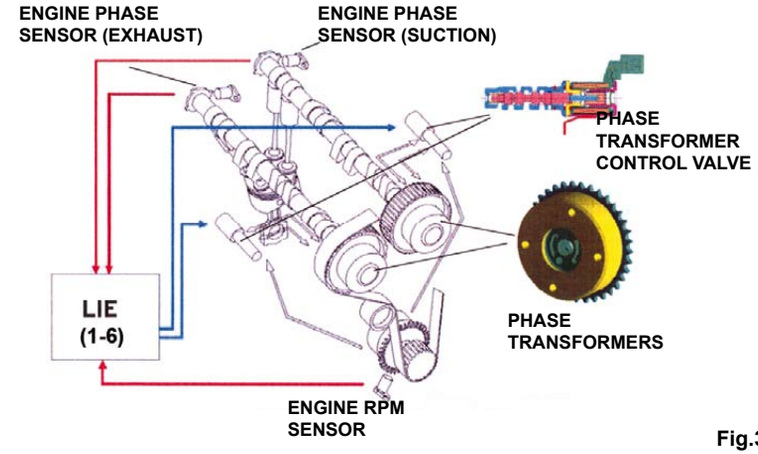

Fig.3

Note
The system optimizes the engine's timing at each instance of engine loading.

VVT operating range

EXHAUST	- 30°
INTAKE	+ 35°

VVT operating strategy

The VVT have two variables:
- Water temperature (**tH_2O**)
- Engine speed (**Rpm**)

tH_2O < 65°C	Activation (the value of the parameter in the "Check list LP640" window regarding "AspicontrolEn /ScarcontrolEN") remains at zero.
tH_2O < 65°C & Rpm > 1200	Activation goes from 0 to 1 but maintains a basic setting required by the system.
tH_2O > 65°C & Rpm > 1200	The VVT will be changed to optimize the torque required by the system under every condition.

® Automobili Lamborghini S.p.A.
The information and procedures published below are strictly confidential and exclusively for the Lamborghini Dealer Network and Authorized Service Points. All copyrights are property of Automobili Lamborghini S.p.A based on copyright law. All of the PDF chapters in the WEB workshop manuals described below are based on information available at the time of publication. The company reserves the right to make updates and modifications. The following are prohibited: reprinting, reproduction, forwarding to unauthorized people and/or third parties, and translation, including partial, without written authorization from Automobili Lamborghini S.p.A.

Timing system check

STOP

There are symbols on the flywheel that indicate the P.M.S. (top dead center):

- bar ▌ (A-Fig.1)
- the initials P.M.S (B-Fig.1) for top dead center

The flywheel has teeth (C-Fig.1) that supply the signal to the pick-up sensor.

Fig.1

STOP

There must always be a distance of 0.6 mm and 1 mm between the tip of the pick-up sensor and the end of the pins.
The provided shims may be used to modify this distance (D-Fig.2), placing them between the pick-up sensor and the flywheel's housing to which the pick-up sensor itself is anchored.

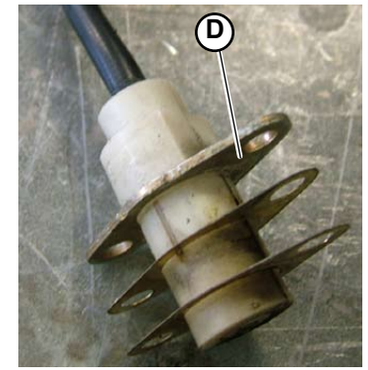

Fig.2

® Automobili Lamborghini S.p.A.
The information and procedures published below are strictly confidential and exclusively for the Lamborghini Dealer Network and Authorized Service Points. All copyrights are property of Automobili Lamborghini S.p.A based on copyright law. All of the PDF chapters in the WEB workshop manuals described below are based on information available at the time of publication. The company reserves the right to make updates and modifications. The following are prohibited: reprinting, reproduction, forwarding to unauthorized people and/or third parties, and translation, including partial, without written authorization from Automobili Lamborghini S.p.A.

This section explains how to disassemble:

A) Timing system cover
B) Timing system chain

A) Timing system cover disassembly

Prerequisites

Note
This procedure can only be carried out after the engine has been removed from the car.

- Auxiliary belt removed **(010103)**.
- Water pump removed **(012203)**.
- Air conditioning system compressor support removed **(026003).**
- Alternator and its support removed **(090303)**.
- Rear differential removed **(050903)**.

Disassembly

1. Remove the oil filter support **(013003)**.
2. Unscrew the two screws under the oil filter support.
3. Unscrew the auxiliary belt pulley mounting bolt and its washer.
4. Remove the auxiliary belt pulley by means of a specific puller.
5. Remove the auxiliary pulley belt tensioner.
6. Remove the heads **(010303).**
7. Remove the cover mounting nuts with washers and remove the cover.
8. Remove the auxiliary belt pulley oil seal from timing system cover.

Note
Timing system cover, heads and crankcase are adapted pieces: if one of them is replaced, specific mechanical intervention is needed to recover perfect leak-tightness.

® Automobili Lamborghini S.p.A.
The information and procedures published below are strictly confidential and exclusively for the Lamborghini Dealer Network and Authorized Service Points. All copyrights are property of Automobili Lamborghini S.p.A based on copyright law. All of the PDF chapters in the WEB workshop manuals described below are based on information available at the time of publication. The company reserves the right to make updates and modifications. The following are prohibited: reprinting, reproduction, forwarding to unauthorized people and/or third parties, and translation, including partial, without written authorization from Automobili Lamborghini S.p.A.

B) Timing system chain disassembly

Prerequisites

- Heads removed **(010303).**
- Timing system cover removed**.**

Upper chain disassembly (LH and RH)

1. The upper chain can be accessed once the head has been removed;
Remove the chain (**A-Fig.1**) from the reel.

Lower chain disassembly

2. Remove the shoe of the oil pump chain.
3. Unscrew the screw (**B-Fig.1**) and remove the toothed wheel and the chain.
4. Remove the hydraulic tightener.
5. Remove the side shoe.
6. Remove the upper shoe.
7. Remove the chain (**C-Fig.1**).
8. Check the chain, reel and engine pinion conditions; if necessary, remove the reels by unscrewing the accessible screws through the specific holes in the reels.

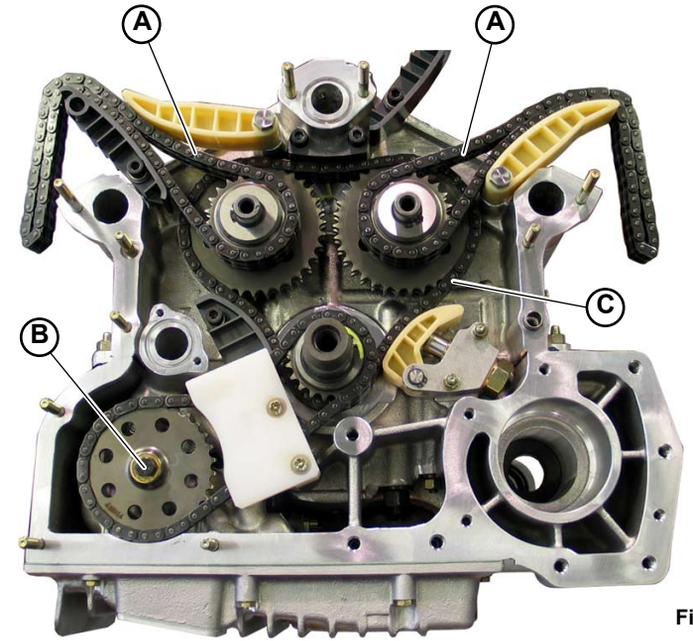

Fig.1

® Automobili Lamborghini S.p.A.
The information and procedures published below are strictly confidential and exclusively for the Lamborghini Dealer Network and Authorized Service Points. All copyrights are property of Automobili Lamborghini S.p.A based on copyright law. All of the PDF chapters in the WEB workshop manuals described below are based on information available at the time of publication. The company reserves the right to make updates and modifications. The following are prohibited: reprinting, reproduction, forwarding to unauthorized people and/or third parties, and translation, including partial, without written authorization from Automobili Lamborghini S.p.A.

This section explains how to assemble:

A) Timing system cover
B) Timing system chain

A) Timing system cover assembly

- Clean thoroughly all the contact areas of cover, crankcase and heads.

1. Install the new O-rings in the positions shown in the figure (**Fig.1-2**).
2. Apply Three bond 1207B on all the areas indicated in the figure (**Fig.1-2**).
3. Position the cover and fasten it by means of washers and nuts;
   Tightening torque (000800-9d).
4. Install the two 6 mm screws under the oil filter support and apply Anckon system 35A42.
5. Install a new auxiliary belt pulley oil seal on the cover.
6. Install the auxiliary belt pulley and fasten it by means of washer and bolt;
   Tightening torque (000800-28c).
7. Fix the oil filter support.

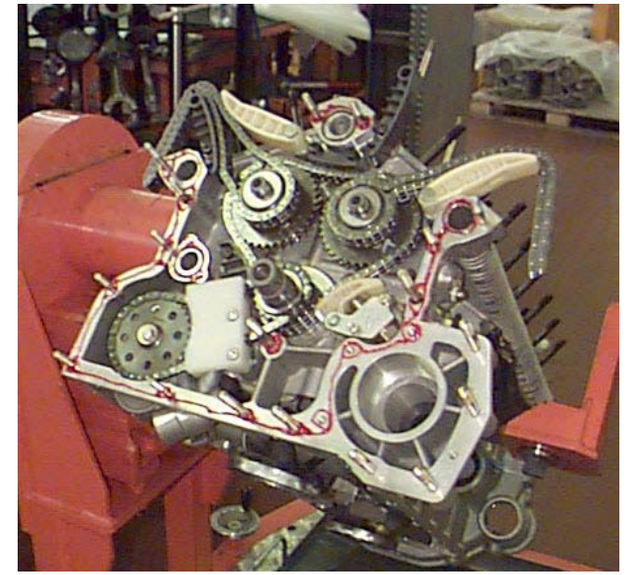

Fig.1

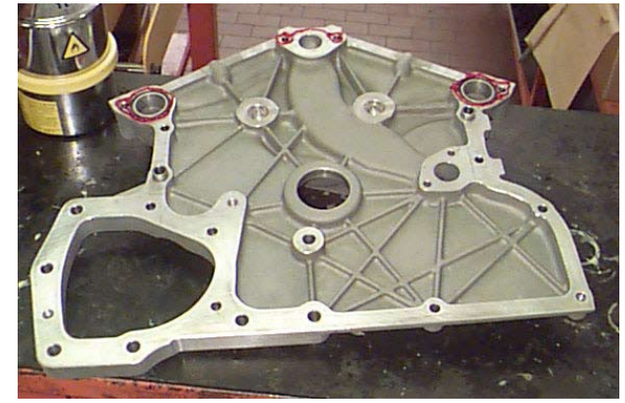

Fig.2

® Automobili Lamborghini S.p.A.
The information and procedures published below are strictly confidential and exclusively for the Lamborghini Dealer Network and Authorized Service Points. All copyrights are property of Automobili Lamborghini S.p.A based on copyright law. All of the PDF chapters in the WEB workshop manuals described below are based on information available at the time of publication. The company reserves the right to make updates and modifications. The following are prohibited: reprinting, reproduction, forwarding to unauthorized people and/or third parties, and translation, including partial, without written authorization from Automobili Lamborghini S.p.A.

B) Timing system chain assembly

- Check the reel journal inner bearing wear.

Lower chain assembly

1. Install the chain (**A-Fig.3**) on the reel.
2. Install the upper shoe.
3. Install the side shoe.
4. Install the hydraulic tightener.

Upper chain (LH and RH) assembly

1. Install the chain tightener on the crankcase.
2. Install the chain (**B-Fig.3**) on the reel.
3. Assemble the toothed wheel (**C-Fig.3**) and the chain (**D-Fig.3**) on the oil pump.
4. Assemble the toothed wheel by tightening the relative bolt.
   Bolt attachment; tightening torque (000800-2c).
5. Assemble the oil pump chain shoe.

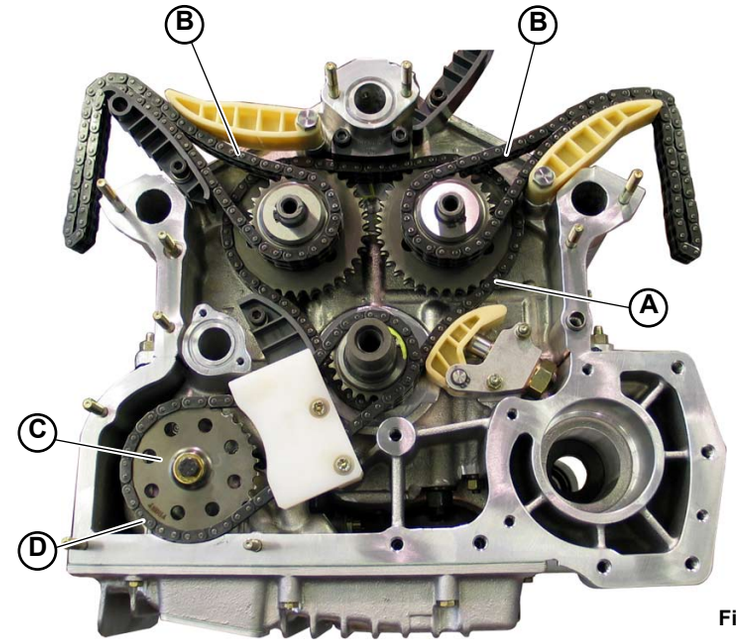

Fig.3

® Automobili Lamborghini S.p.A.
The information and procedures published below are strictly confidential and exclusively for the Lamborghini Dealer Network and Authorized Service Points. All copyrights are property of Automobili Lamborghini S.p.A based on copyright law. All of the PDF chapters in the WEB workshop manuals described below are based on information available at the time of publication. The company reserves the right to make updates and modifications. The following are prohibited: reprinting, reproduction, forwarding to unauthorized people and/or third parties, and translation, including partial, without written authorization from Automobili Lamborghini S.p.A.

Fuel tank check

Preliminary operations

- Remove the right hood support cylinder **(082703)**.
- Remove the silencer safety grid **(025103)**.
- Disassemble the right side carbon bulkhead **(081303)**.
- Disassemble the filter guard **(013303)**.
- Free the air pipes from the engine.
- Completely remove the air filter **(013303)**.

Tests and checks

1. Check that the fuel delivery and return pipe (**A-Fig.1**) is connected properly;

2. Check that the fuel delivery pipe (**B-Fig.1**) is not damaged.

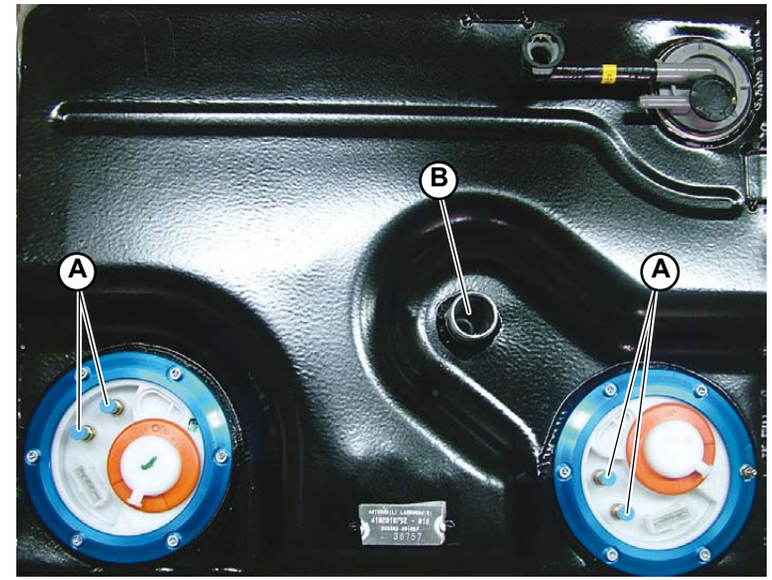

Fig.1

® Automobili Lamborghini S.p.A.
The information and procedures published below are strictly confidential and exclusively for the Lamborghini Dealer Network and Authorized Service Points. All copyrights are property of Automobili Lamborghini S.p.A based on copyright law. All of the PDF chapters in the WEB workshop manuals described below are based on information available at the time of publication. The company reserves the right to make updates and modifications. The following are prohibited: reprinting, reproduction, forwarding to unauthorized people and/or third parties, and translation, including partial, without written authorization from Automobili Lamborghini S.p.A.

This section explains how to disassemble:

A) Disassembling the tank
B) Disassembling the fuel level indicator (float)

® Automobili Lamborghini S.p.A.
The information and procedures published below are strictly confidential and exclusively for the Lamborghini Dealer Network and Authorized Service Points. All copyrights are property of Automobili Lamborghini S.p.A based on copyright law. All of the PDF chapters in the WEB workshop manuals described below are based on information available at the time of publication. The company reserves the right to make updates and modifications. The following are prohibited: reprinting, reproduction, forwarding to unauthorized people and/or third parties, and translation, including partial, without written authorization from Automobili Lamborghini S.p.A.

A) Disassembling the tank

Preliminary operations

- Remove the right hood support cylinder **(082703)**.
- Disassemble the rear silencer grid **(025103)**.
- Disassemble the right side carbon bulkhead **(081303)**.
- Loosen the radiator expansion tank mount.
- Remove the air filter box guard **(013303)**.

The fuel tank should be emptied by removing the drain plug on the bottom of the tank itself (**A-Fig.1**).

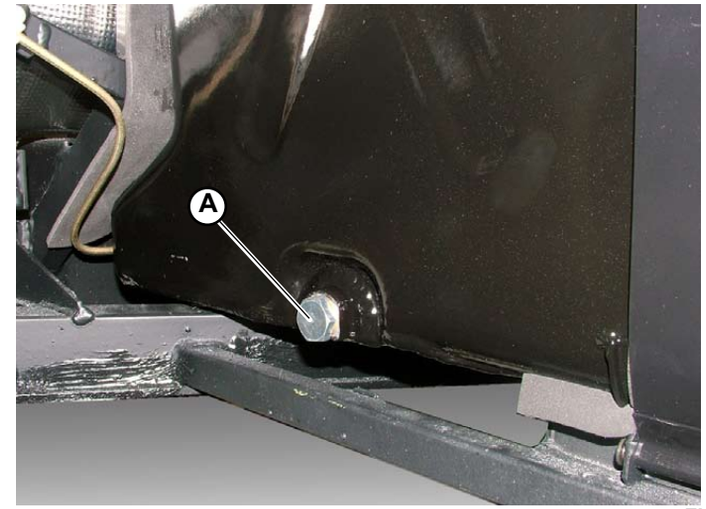

Fig.1

Tank disassembly

1. Disconnect the upper fuel delivery pipe (**B-Fig.2**).

- Lift the vehicle on the car lift **(000000)**.
- Disassemble the right rear wheel **(060103)**.
- Disassemble the complete right rear suspension **(051103)**.
- Disassemble the lower bulkhead under the bottom of the vehicle **(082503)**.

2. Free the tie rods that hold the tank in place.

3. Disconnect the tank from the fuel delivery and return pipes (**C-Fig.2**) and from the connectors (**D-Fig.2**) of the two fuel pumps.

4. Disconnect the fuel anti-evaporation valve (**E-Fig.2**).

5. Extract the tank.

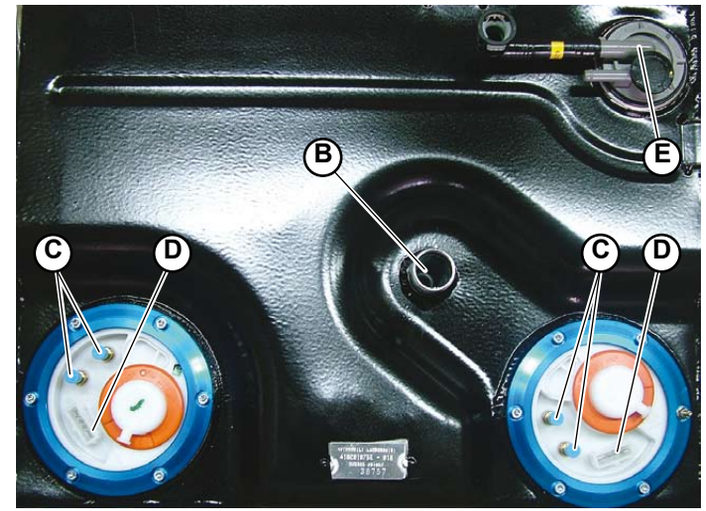

Fig.2

® Automobili Lamborghini S.p.A.
The information and procedures published below are strictly confidential and exclusively for the Lamborghini Dealer Network and Authorized Service Points. All copyrights are property of Automobili Lamborghini S.p.A based on copyright law. All of the PDF chapters in the WEB workshop manuals described below are based on information available at the time of publication. The company reserves the right to make updates and modifications. The following are prohibited: reprinting, reproduction, forwarding to unauthorized people and/or third parties, and translation, including partial, without written authorization from Automobili Lamborghini S.p.A.

B) Disassembling the fuel level indicator (float)

The fuel level indicator is assembled on the right fuel pump (bank 7-12)(**A-Fig.3**).

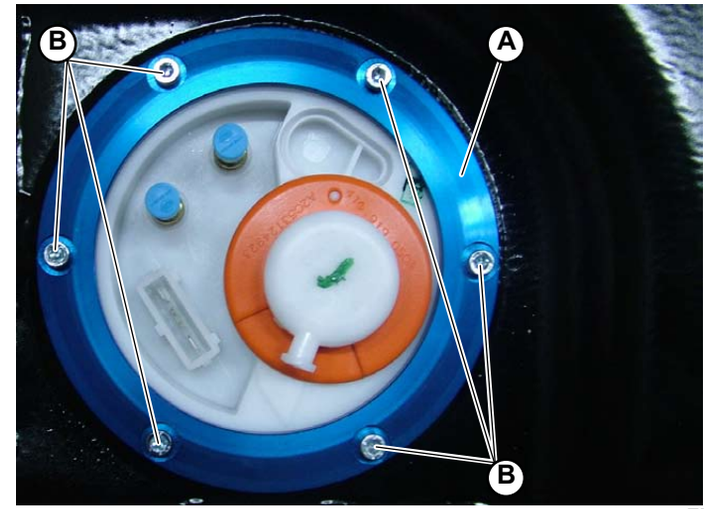

Fig.3

Preliminary operations

- Disassemble the tank **(Point A)**.

Disassembling the fuel pump and fuel level indicator

1. Remove the screws (**B-Fig.3**) securing the fuel pump/level indicator.
2. Remove the fuel pump/level indicator.

® Automobili Lamborghini S.p.A.
The information and procedures published below are strictly confidential and exclusively for the Lamborghini Dealer Network and Authorized Service Points. All copyrights are property of Automobili Lamborghini S.p.A based on copyright law. All of the PDF chapters in the WEB workshop manuals described below are based on information available at the time of publication. The company reserves the right to make updates and modifications. The following are prohibited: reprinting, reproduction, forwarding to unauthorized people and/or third parties, and translation, including partial, without written authorization from Automobili Lamborghini S.p.A.

This section explains how to assemble:

A) Assembling the tank

B) Assembling the fuel level indicator (float)

® Automobili Lamborghini S.p.A.
The information and procedures published below are strictly confidential and exclusively for the Lamborghini Dealer Network and Authorized Service Points. All copyrights are property of Automobili Lamborghini S.p.A based on copyright law. All of the PDF chapters in the WEB workshop manuals described below are based on information available at the time of publication. The company reserves the right to make updates and modifications. The following are prohibited: reprinting, reproduction, forwarding to unauthorized people and/or third parties, and translation, including partial, without written authorization from Automobili Lamborghini S.p.A.

A) Assembling the tank

STOP Before assembling, use appropriate equipment to check the vacuum seal of the tank to ensure the welds and joins are consistent.

1. With the vehicle raised on the lift, reinsert the tank inside the vehicle itself for assembly.

STOP The tank is assembled on an L-shaped bracket. When reinserting the tank into the vehicle for assembly, be very careful that the tank rests correctly on the L-shaped bracket.

2. Connect the fuel delivery and return pipes (**A-Fig.1**) and connectors (**B-Fig.1**) onto the two fuel pumps.

3. Connect the fuel anti-evaporation valve (**C-Fig.1**).

4. Attach the tie rods that hold the tank in place.

- Assemble the lower bulkhead under the bottom of the vehicle **(082505)**.
- Assemble the complete right rear suspension **(051105)**.
- Assemble the right rear wheel **(060105)**.
- Lower the vehicle to the ground.

5. Connect the upper fuel delivery pipe (**D-Fig.1**) using a clamp.
   Clamp tightening: tightening torque (000800-25b).

- Assemble the air filter box guard **(013305)**.
- Attach the radiator expansion tank.
- Assemble the right side carbon bulkhead **(081305)**.
- Assemble the rear silencer grid **(025105)**.
- Assemble the right hood support cylinder **(082705)**.
- Fill the fuel tank.

STOP After assembling, the vehicle must be realigned.

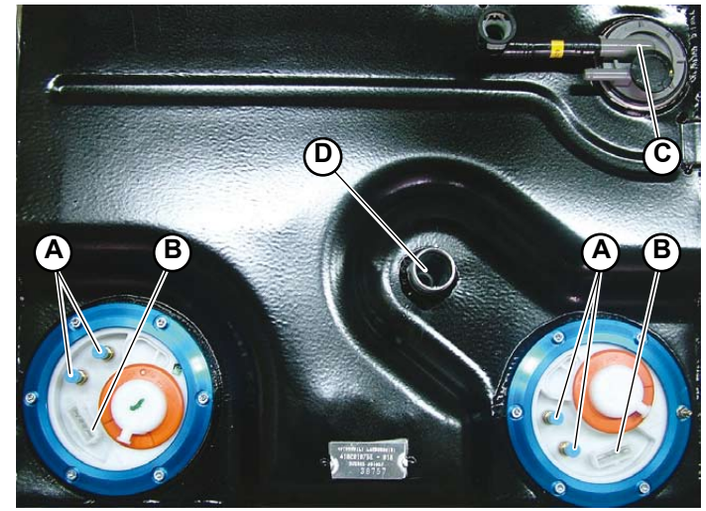

Fig.1

® Automobili Lamborghini S.p.A.
The information and procedures published below are strictly confidential and exclusively for the Lamborghini Dealer Network and Authorized Service Points. All copyrights are property of Automobili Lamborghini S.p.A based on copyright law. All of the PDF chapters in the WEB workshop manuals described below are based on information available at the time of publication. The company reserves the right to make updates and modifications. The following are prohibited: reprinting, reproduction, forwarding to unauthorized people and/or third parties, and translation, including partial, without written authorization from Automobili Lamborghini S.p.A.

B) Assembling the fuel level indicator (float)

The fuel level indicator is assembled on the right fuel pump (bank 7-12)(A-Fig.2).

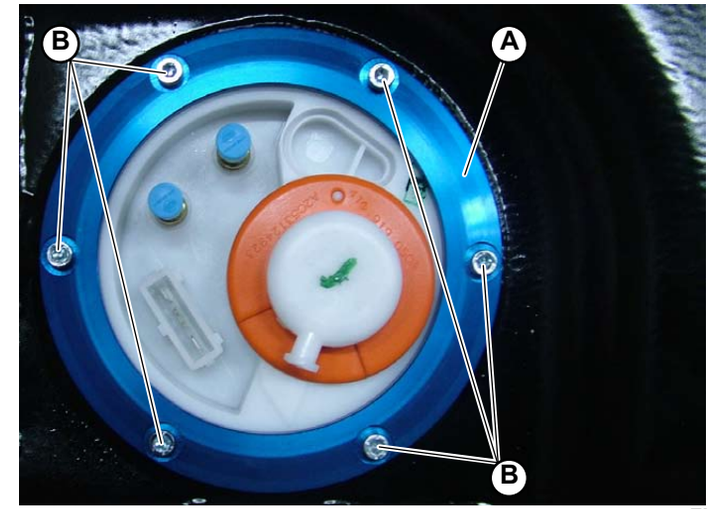

Fig.2

1. Insert the gasket on the flange.
2. Insert the fuel pump/level indicator in the relative housing and tighten the 6 screws (**B-Fig.2**).
   Screw attachment; tightening torque (000800-9a).

- Reassemble the tank **(Point A)**.

Check that there are no pressure leaks inside the tank (using LDAS32). If so, apply sealant and repeat the operations described above.

® Automobili Lamborghini S.p.A.
The information and procedures published below are strictly confidential and exclusively for the Lamborghini Dealer Network and Authorized Service Points. All copyrights are property of Automobili Lamborghini S.p.A based on copyright law. All of the PDF chapters in the WEB workshop manuals described below are based on information available at the time of publication. The company reserves the right to make updates and modifications. The following are prohibited: reprinting, reproduction, forwarding to unauthorized people and/or third parties, and translation, including partial, without written authorization from Automobili Lamborghini S.p.A.

Gas Pressure Detection System At Exhaust Pipe

Each exhaust manifold is equipped with a differential pressure sensor (**Fig.1**) able to detect the pressure flow inside the manifold itself. This sensor determines the misfiring cylinder through the injection system and displays (through the OBD II error code) any exhaust problems.

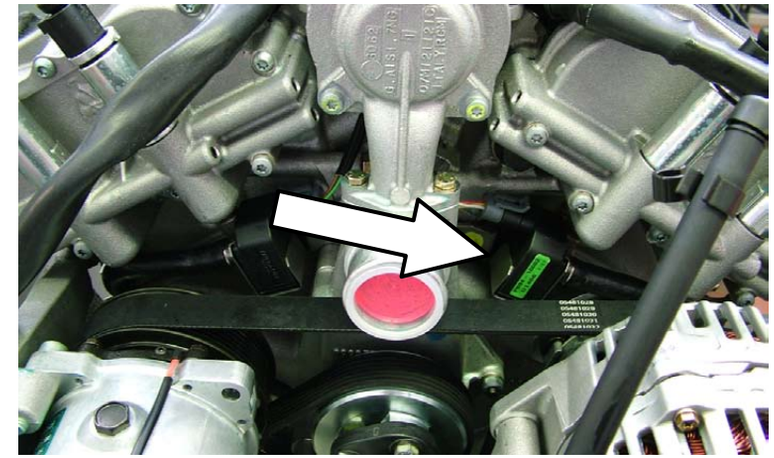

Fig.1

The differential pressure sensor output signal (**Fig.2**), sent to the relevant LIE, is represented by a pulse series; each pulse corresponds to a specified cylinder. A MISFIRE is detected when the index is greater than the threshold calibrated by the ECU.

A.	Threshold value	(below this value misfiring is identified and the OBD II page is displayed)
B.	Peak value	

To view these values, use the LDAS system **(109114)** and open the “Misfire status” window.

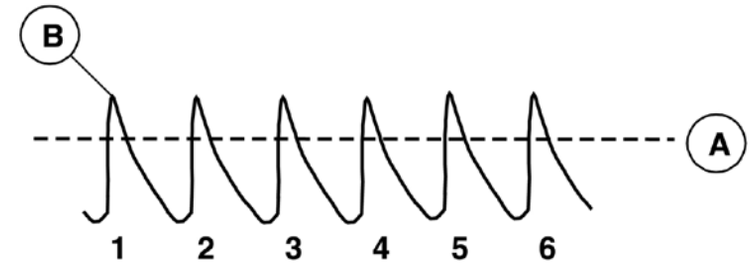

Fig.2

® Automobili Lamborghini S.p.A.
The information and procedures published below are strictly confidential and exclusively for the Lamborghini Dealer Network and Authorized Service Points. All copyrights are property of Automobili Lamborghini S.p.A based on copyright law. All of the PDF chapters in the WEB workshop manuals described below are based on information available at the time of publication. The company reserves the right to make updates and modifications. The following are prohibited: reprinting, reproduction, forwarding to unauthorized people and/or third parties, and translation, including partial, without written authorization from Automobili Lamborghini S.p.A.

Exhaust pressure sensor disassembly

1. Disconnect the connector (**A-Fig.1**) connected to the sensor (**B-Fig.1**).
2. Unscrew the two nuts (**C-Fig.2**) that secure the sensor.
3. Remove the sensor.

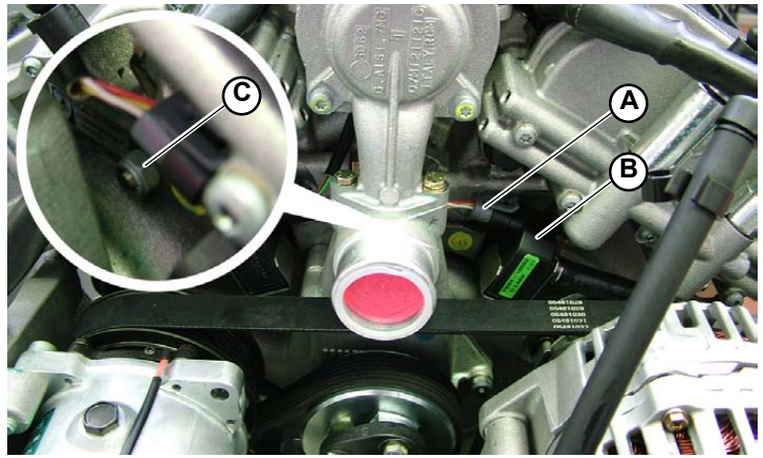

Fig.1

® Automobili Lamborghini S.p.A.
The information and procedures published below are strictly confidential and exclusively for the Lamborghini Dealer Network and Authorized Service Points. All copyrights are property of Automobili Lamborghini S.p.A based on copyright law. All of the PDF chapters in the WEB workshop manuals described below are based on information available at the time of publication. The company reserves the right to make updates and modifications. The following are prohibited: reprinting, reproduction, forwarding to unauthorized people and/or third parties, and translation, including partial, without written authorization from Automobili Lamborghini S.p.A.

Exhaust pressure sensor assembly

1. Tighten the two nuts (**A-Fig.1**) that secure the sensor (**B-Fig.1**).
2. Connect the connector (**C-Fig.1**).

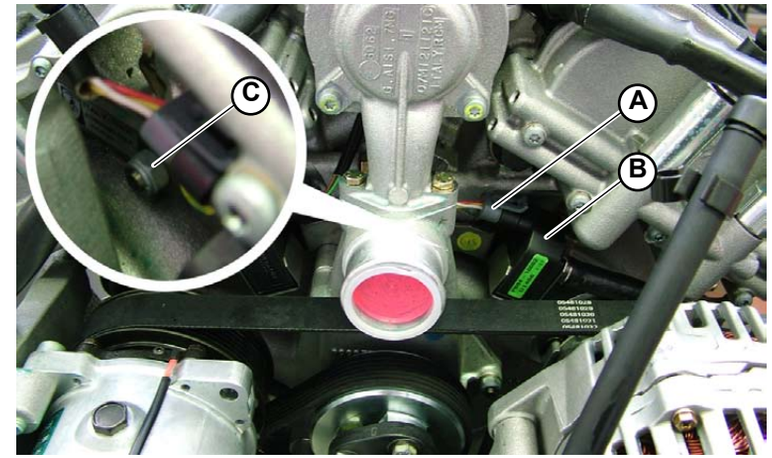

Fig.1

® Automobili Lamborghini S.p.A.
The information and procedures published below are strictly confidential and exclusively for the Lamborghini Dealer Network and Authorized Service Points. All copyrights are property of Automobili Lamborghini S.p.A based on copyright law. All of the PDF chapters in the WEB workshop manuals described below are based on information available at the time of publication. The company reserves the right to make updates and modifications. The following are prohibited: reprinting, reproduction, forwarding to unauthorized people and/or third parties, and translation, including partial, without written authorization from Automobili Lamborghini S.p.A.

Fuel Anti-Evaporation System

The anti-evaporation system prevents the fuel vapors, which consist of the lightest fractions of the hydrocarbons that form in the tank, from discharging into the atmosphere and being suctioned again to be burned.
The system operates especially when the outside temperature is high and the fuel temperature rises, thus increasing the tendency to evaporate.

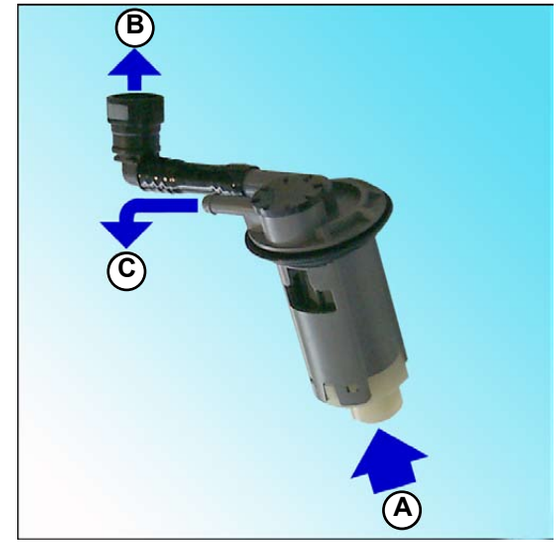

Fig.1

Operating Principle

The fuel vapors in the tank are conveyed, by means of a floating valve installed on the tank, to a canister which can absorb them when the engine is off.
The floating valve has the following functions:

- It prevents the fuel from reaching the canister in the case of hard acceleration/deceleration when the car has a full tank, or from spilling from the tank, in case the car rolls over;
- It allows the vapors to pass from the tank to the canister;
- It enables to discharge into the atmosphere any excess pressure inside the tank (electrovalve malfunctioning, clogged pipe).

A.	From the tank
B.	To the canister
C.	Discharge into the atmosphere

® Automobili Lamborghini S.p.A.
The information and procedures published below are strictly confidential and exclusively for the Lamborghini Dealer Network and Authorized Service Points. All copyrights are property of Automobili Lamborghini S.p.A based on copyright law. All of the PDF chapters in the WEB workshop manuals described below are based on information available at the time of publication. The company reserves the right to make updates and modifications. The following are prohibited: reprinting, reproduction, forwarding to unauthorized people and/or third parties, and translation, including partial, without written authorization from Automobili Lamborghini S.p.A.

The canister is connected, by means of two solenoid valves, to two pipes that convey the vapors to the engine intake manifolds. With the engine running, each solenoid valve is piloted in duty-cycle by the engine control unit according to engine speed and load, thus putting the canister into communication with the intake manifold and allowing the suction of the vapors inside the canister. At high engine speed, a venting valve (VISTON valve), connecting the canister to the atmosphere by means of an adequate air filter, prevents the canister implosion that can be caused by the engine vacuum.
The fuel vapor sensor generates a OBDII error in case of not controlled fuel vapor emission (not pressurized tank with leakage from the pipes or plug missing).

Fuel anti-evaporation system layout (Fig.2)	
A.	Fuel vapors pressure sensor
B.	Floating valve
C.	Fuel tank
D.	Right suction fuel vapor inlet
E.	Left suction fuel vapor inlet
F.	Venting valve (VISTON)
G.	Air filter for canister ventilation
H.	Canister
I.	Solenoid valves

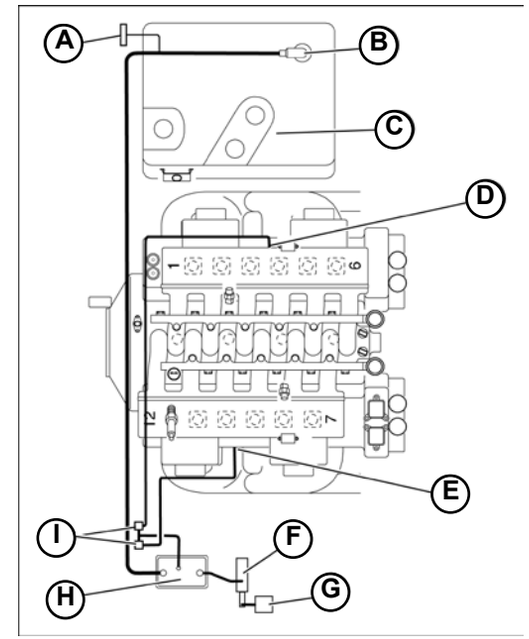

Fig.2

® Automobili Lamborghini S.p.A.
The information and procedures published below are strictly confidential and exclusively for the Lamborghini Dealer Network and Authorized Service Points. All copyrights are property of Automobili Lamborghini S.p.A based on copyright law. All of the PDF chapters in the WEB workshop manuals described below are based on information available at the time of publication. The company reserves the right to make updates and modifications. The following are prohibited: reprinting, reproduction, forwarding to unauthorized people and/or third parties, and translation, including partial, without written authorization from Automobili Lamborghini S.p.A.

The present section contains the following disassembly sequences:
A) Fuel anti-evaporation valve
B) Canister

A) Fuel anti-evaporation valve

Preliminary operations

- Remove the right hood support piston **(012703)**.
- Disassemble the silencer safety grid **(025103)**.
- Disassemble the right side carbon bulkhead **(081303)**.
- Disassemble the air filter guard **(013303)**.

Valve disassemble

1. Disassemble the fuel anti-evaporation valve (**A-Fig.1**) by freeing the six screws that secure it to the tank.

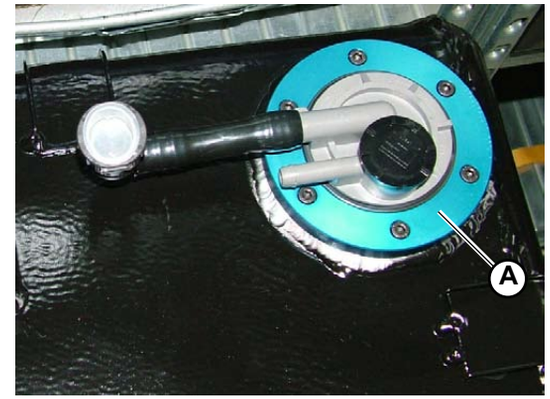

Fig.1

B) Canister

Preliminary operations

- Remove the left hood support piston **(012703)**.
- Disassemble the silencer safety grid **(025103)**.
- Disassemble the left side carbon bulkhead **(081303)**.
- Disassemble the air filter guard **(013303)**.
- Disassemble the air filter **(013303)**.

Canister disassemble

1. Disconnect the three pipes (**B-Fig.2**) connected to the canister.
2. Remove the canister (**C-Fig.2**).

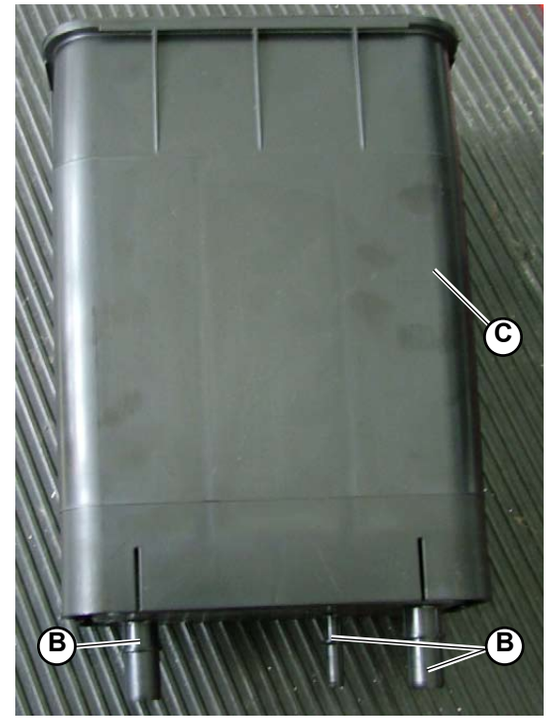

Fig.2

® Automobili Lamborghini S.p.A.
The information and procedures published below are strictly confidential and exclusively for the Lamborghini Dealer Network and Authorized Service Points. All copyrights are property of Automobili Lamborghini S.p.A based on copyright law. All of the PDF chapters in the WEB workshop manuals described below are based on information available at the time of publication. The company reserves the right to make updates and modifications. The following are prohibited: reprinting, reproduction, forwarding to unauthorized people and/or third parties, and translation, including partial, without written authorization from Automobili Lamborghini S.p.A.

The present section contains the following assembly sequences:
A) Fuel anti-evaporation valve
B) Canister

A) Fuel anti-evaporation valve

1. Assemble the fuel anti-evaporation valve (**A-Fig.1**) on the tank using the six socket head screws.

- Assemble the air filter guard **(013305)**.
- Assemble the right side carbon bulkhead **(081305)**.
- Assemble the silencer safety grid **(025105)**.
- Position the right hood support piston **(012705)**.

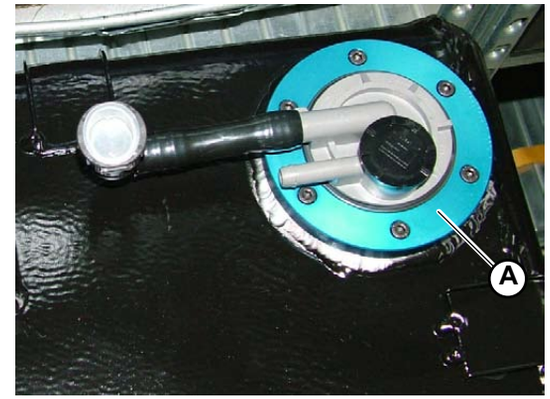

Fig.1

B) Canister

1. Place the canister (**B-Fig.2**) in its special housing inside the left side of the vehicle.

2. Reconnect the three pipes (**C-Fig.2**) of the canister.

- Assemble the air filter **(013305)**.
- Assemble the air filter guard **(013305)**.
- Assemble the left side carbon bulkhead **(081305)**.
- Assemble the silencer safety grid **(025105)**.
- Position the left hood support piston **(012705)**.

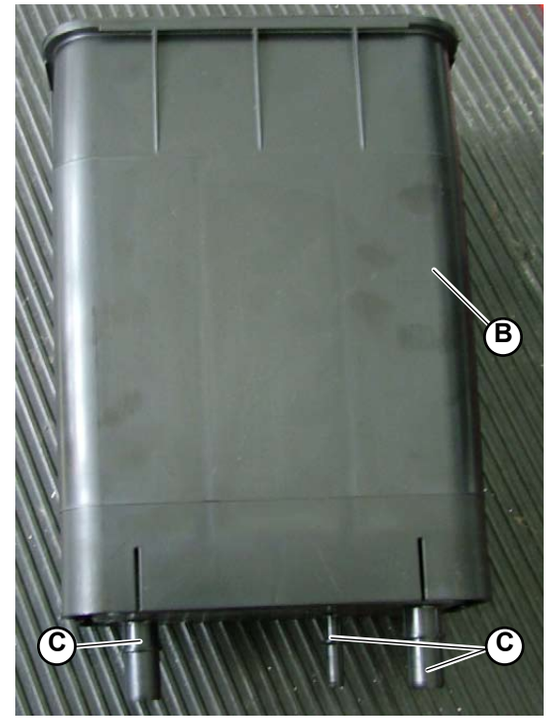

Fig.2

® Automobili Lamborghini S.p.A.
The information and procedures published below are strictly confidential and exclusively for the Lamborghini Dealer Network and Authorized Service Points. All copyrights are property of Automobili Lamborghini S.p.A based on copyright law. All of the PDF chapters in the WEB workshop manuals described below are based on information available at the time of publication. The company reserves the right to make updates and modifications. The following are prohibited: reprinting, reproduction, forwarding to unauthorized people and/or third parties, and translation, including partial, without written authorization from Automobili Lamborghini S.p.A.

General Description

The exhaust system consists of the following parts:

- Six in two in one insulated manifold;
- Single catalytic converter (EU) or with post-catalyst (USA);
- Exhaust silencer.

Exhaust system (Fig.1)	
A.	Exhaust manifold
B.	CO pick-up pipe
C.	Lambda sensor upstream of the catalytic converter (LINEAR)
D.	Catalytic converter
E.	Thermocouple outlet
F.	Lambda sensor downstream of the catalytic converter
G.	Post-catalyst (USA)
H.	Exhaust silencer
I.	Exhaust terminal

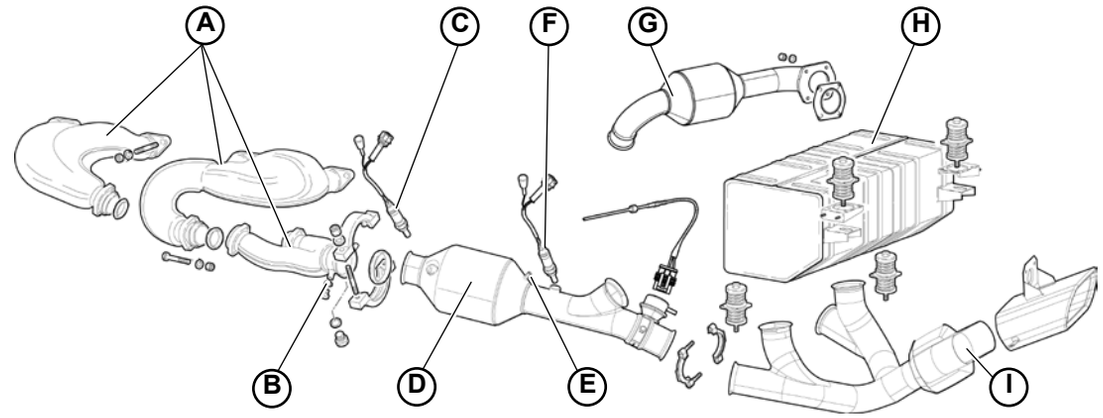

Fig.1

® Automobili Lamborghini S.p.A.
The information and procedures published below are strictly confidential and exclusively for the Lamborghini Dealer Network and Authorized Service Points. All copyrights are property of Automobili Lamborghini S.p.A based on copyright law. All of the PDF chapters in the WEB workshop manuals described below are based on information available at the time of publication. The company reserves the right to make updates and modifications. The following are prohibited: reprinting, reproduction, forwarding to unauthorized people and/or third parties, and translation, including partial, without written authorization from Automobili Lamborghini S.p.A.

Catalytic Converter

The catalytic converter is a device that simultaneously reduces the three main pollution components in the exhaust: Unburnt hydrocarbons (HC), carbon
monoxide (CO) and nitrogen oxides (NOx).

Inside the catalytic converter two chemical reactions take place:

- Oxidizing of the CO and HC, converted into carbon dioxide (CO2) and water (H2O);
- Reduction of the NOx converted into nitrogen (N2).

These reactions are possible in a very short time due to the presence inside the structure (metal block) of the catalyst, of a layer of active substances (platinum and rhodium) that considerably speed up the conversion of the harmful substances.
The efficiency of this conversion process however, depends on the fact that the mixture strength that is used by the engine continually fluctuates around the stoichiometric value that is obtained via the feedback carried out by the control unit based on the lambda sensor signals.
Moreover the conversion processes take place with temperatures over 300 to 350°C: Therefore it is essential that the catalytic converter reaches this temperature as soon as possible so as to operate correctly.

Catalytic converter chemistry (Fig.2)	
A.	Metal block
B.	Metal support
C	External steel wrapping

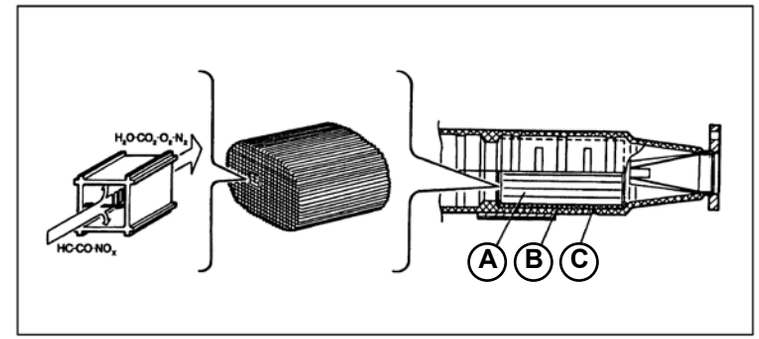

Fig.2

® Automobili Lamborghini S.p.A.
The information and procedures published below are strictly confidential and exclusively for the Lamborghini Dealer Network and Authorized Service Points. All copyrights are property of Automobili Lamborghini S.p.A based on copyright law. All of the PDF chapters in the WEB workshop manuals described below are based on information available at the time of publication. The company reserves the right to make updates and modifications. The following are prohibited: reprinting, reproduction, forwarding to unauthorized people and/or third parties, and translation, including partial, without written authorization from Automobili Lamborghini S.p.A.

The causes of destruction of the catalyst inner part are mainly two:

- Lead in the fuel, that lowers the conversion level to practically nothing (“lead poisoning”) and irreparably damages the lambda sensor too;

- Completely unburnt fuel in the exhaust gas, due to misfiring. This causes an increase in temperature such as to cause the melting of the metal support. As a consequence the connector must never, in any circumstances, be disconnected from the coils when the engine is running.

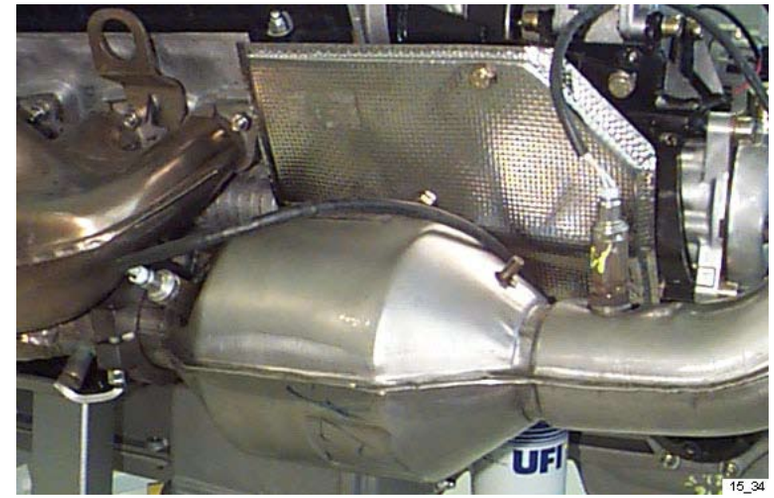

Fig.3

® Automobili Lamborghini S.p.A.
The information and procedures published below are strictly confidential and exclusively for the Lamborghini Dealer Network and Authorized Service Points. All copyrights are property of Automobili Lamborghini S.p.A based on copyright law. All of the PDF chapters in the WEB workshop manuals described below are based on information available at the time of publication. The company reserves the right to make updates and modifications. The following are prohibited: reprinting, reproduction, forwarding to unauthorized people and/or third parties, and translation, including partial, without written authorization from Automobili Lamborghini S.p.A.

Exhaust Gas Temperature Control Device

The exhaust pipe coming out from the catalytic converter features a thermocouple to read the temperature. This thermocouple generates a signal in proportion to the exhaust gas temperature and sends it to a special electronic control unit that switches on the “CATALYST RIGHT” or “CATALYST LEFT” warning light to which it is connected.
If there is an abnormal temperature increase in one of the catalytic converters the control unit intervenes as follows:

- For temperatures ranging between 945 and 960 °C the “CATALYST” warning light switches on intermittently: In this case it is necessary to slow down the car until the warning light switches off then find the cause of the exhaust system overheating.
- For temperatures over 960 °C the “CATALYST” warning light stays on permanently and the fuel is cut off to the injectors of the relevant cylinder bank: In this case it is necessary to stop the car and find the cause of the exhaust system overheating.

When temperature drops below 800°C, normal functions are reset.

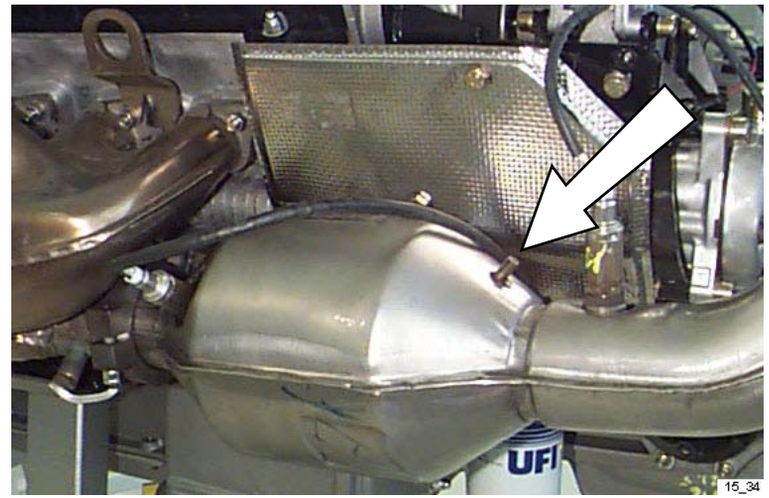

Fig.4

STOP **The “CATALYST” warning lights are tested and switched on for about two seconds whenever the ignition key is turned to “MARCIA”.**
If the warning light does not switch on or stays on after the initial check, this warns the driver that one of the two temperature control systems is not working efficiently.

® Automobili Lamborghini S.p.A.
The information and procedures published below are strictly confidential and exclusively for the Lamborghini Dealer Network and Authorized Service Points. All copyrights are property of Automobili Lamborghini S.p.A based on copyright law. All of the PDF chapters in the WEB workshop manuals described below are based on information available at the time of publication. The company reserves the right to make updates and modifications. The following are prohibited: reprinting, reproduction, forwarding to unauthorized people and/or third parties, and translation, including partial, without written authorization from Automobili Lamborghini S.p.A.

ENCS system strategy

Engine speed	Engine Temperature	throttle position	Exhaust system throttle	Soldenoid valve status
< 4000	t < 60°	< 40%	close	energized
> 4000	t < 60°	< 40%	close	energized
< 4000	t < 60°	> 40%	close	energized
> 4000	t < 60°	> 40%	open	not energized

The values stated may vary

Engine speed	Engine Temperature	throttle position	Exhaust system throttle	Soldenoid valve status
< 4600	t > 60°	< 40%	close	energized
> 4600	t > 60°	< 40%	close	energized
< 4600	t > 60°	> 40%	close	energized
> 4600	t > 60°	> 40%	open	not energized

The values stated may vary

® Automobili Lamborghini S.p.A.
The information and procedures published below are strictly confidential and exclusively for the Lamborghini Dealer Network and Authorized Service Points. All copyrights are property of Automobili Lamborghini S.p.A based on copyright law. All of the PDF chapters in the WEB workshop manuals described below are based on information available at the time of publication. The company reserves the right to make updates and modifications. The following are prohibited: reprinting, reproduction, forwarding to unauthorized people and/or third parties, and translation, including partial, without written authorization from Automobili Lamborghini S.p.A.

Secondary air supply system strategy

When the car is turned, if the following conditions occur:
- Water temperature between -11°C and +40°C;
- Air temperature <40°C;
- Catalytic converter temperature <250°C;

the pump is controlled: its maximum time is 65 sec.

STOP **The pump will stop if any one of these conditions occurs.**

To deactivate the system (and disable the pump), one of the following conditions must occur:
- Catalytic converter temperature >680°C;
- Air temperature >40°C;
- H2o temperature >40°C;
- Any condition related to the temperature but with a PA1024 >99%.

This system is used when the car started with a cold engine, to increase combustion and allow the catalytic converter to reach its operating range quickly, reducing emissions.

Secondary air assembly (Fig.5)	
A.	Auxiliary air valves
B.	Pump

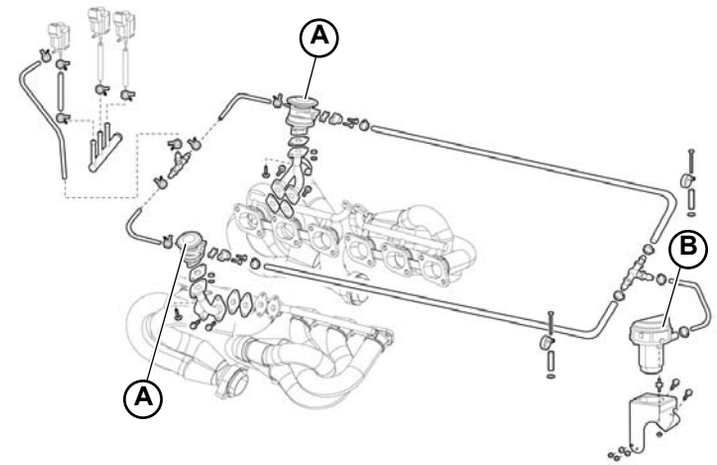

Fig.5

® Automobili Lamborghini S.p.A.
The information and procedures published below are strictly confidential and exclusively for the Lamborghini Dealer Network and Authorized Service Points. All copyrights are property of Automobili Lamborghini S.p.A based on copyright law. All of the PDF chapters in the WEB workshop manuals described below are based on information available at the time of publication. The company reserves the right to make updates and modifications. The following are prohibited: reprinting, reproduction, forwarding to unauthorized people and/or third parties, and translation, including partial, without written authorization from Automobili Lamborghini S.p.A.

This section explains how to disassemble:

A) Silencer safety grid
B) Silencer guard
C) Silencer
D) Exhaust terminals
E) 3-way pipes
F) Exhaust manifolds
G) Secondary air assembly

® Automobili Lamborghini S.p.A.
The information and procedures published below are strictly confidential and exclusively for the Lamborghini Dealer Network and Authorized Service Points. All copyrights are property of Automobili Lamborghini S.p.A based on copyright law. All of the PDF chapters in the WEB workshop manuals described below are based on information available at the time of publication. The company reserves the right to make updates and modifications. The following are prohibited: reprinting, reproduction, forwarding to unauthorized people and/or third parties, and translation, including partial, without written authorization from Automobili Lamborghini S.p.A.

A) Disassembling the silencer safety grid

1. Unscrew the 4 upper screws (**A-Fig. 1**) and the 4 lower screws (**B-Fig. 1**) securing the silencer safety grid to the car.
2. Remove the silencer safety grid.

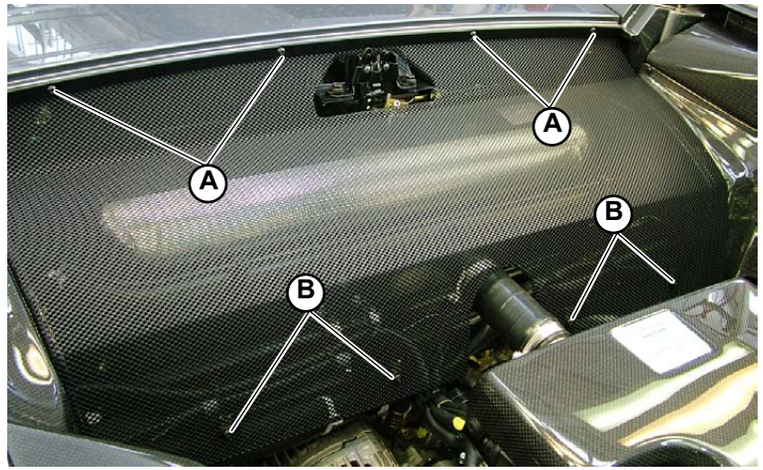

Fig.1

® Automobili Lamborghini S.p.A.
The information and procedures published below are strictly confidential and exclusively for the Lamborghini Dealer Network and Authorized Service Points. All copyrights are property of Automobili Lamborghini S.p.A based on copyright law. All of the PDF chapters in the WEB workshop manuals described below are based on information available at the time of publication. The company reserves the right to make updates and modifications. The following are prohibited: reprinting, reproduction, forwarding to unauthorized people and/or third parties, and translation, including partial, without written authorization from Automobili Lamborghini S.p.A.

B) Disassembling the silencer guard

Preliminary operations

- Remove the silencer safety grid **(Point A)**.
- Remove the spoiler above the silencer **(082703)**.

Disassembling the guard

1. Unscrew the 2 screws (**A-Fig.2**) on the guard above the silencer.
2. Unscrew the 4 screws (**B-Fig.3/4**) securing the 2 side brackets (**C-Fig.3/4**) on the guard (2 screws for each bracket).
3. Remove the silencer guard (**D-Fig.2**).

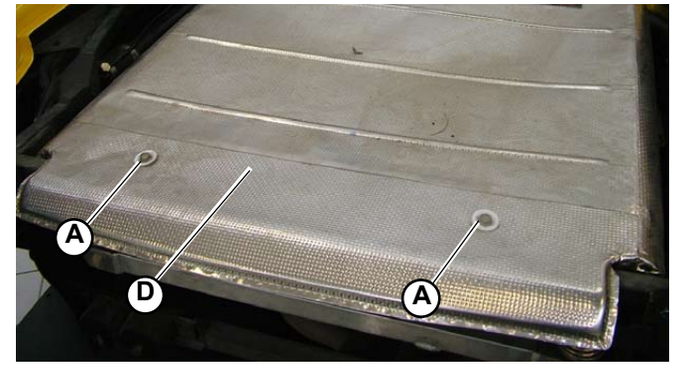

Fig.2

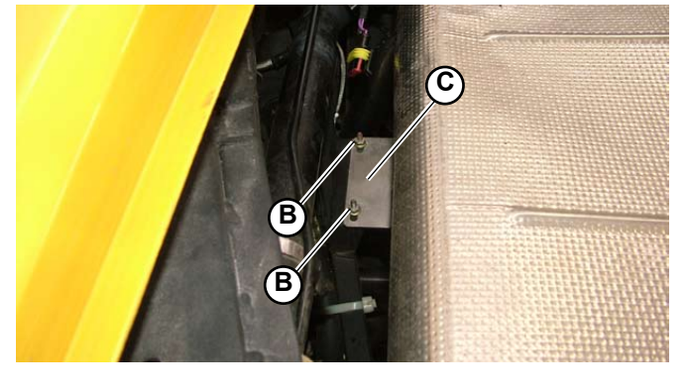

Fig.3

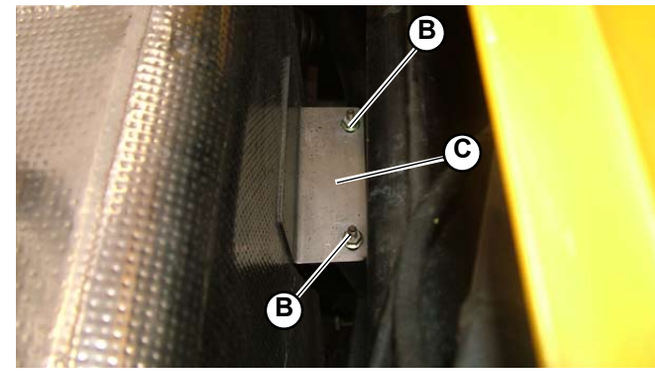

Fig.4

® Automobili Lamborghini S.p.A.
The information and procedures published below are strictly confidential and exclusively for the Lamborghini Dealer Network and Authorized Service Points. All copyrights are property of Automobili Lamborghini S.p.A based on copyright law. All of the PDF chapters in the WEB workshop manuals described below are based on information available at the time of publication. The company reserves the right to make updates and modifications. The following are prohibited: reprinting, reproduction, forwarding to unauthorized people and/or third parties, and translation, including partial, without written authorization from Automobili Lamborghini S.p.A.

C) Disassembling the silencer.

Preliminary operations

- Lift the vehicle on the car lift **(000000)**.
- Remove the central rear grid **(081303)**.
- Remove the silencer safety grid **(Point A)**.
- Remove the spoiler above the silencer **(082703)**.
- Disassemble the silencer guard **(Point B)**.
- Disassemble the two exhaust terminals **(Point D)**.

Disassembling the silencer

1. Remove the 4 supports (**A-Fig. 5**) securing the silencer to the chassis.
2. Remove the clamps (**B-Fig. 6**) and extract (from the catalytic converters) the two pipes connecting the silencer to the catalytic converters.
3. Remove the silencer.

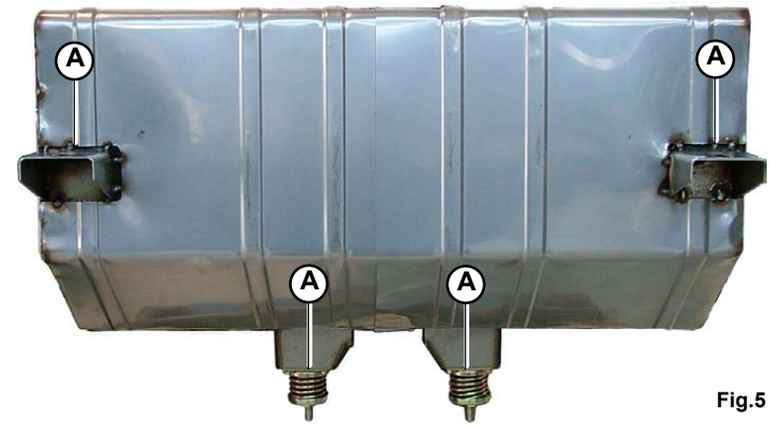

Fig.5

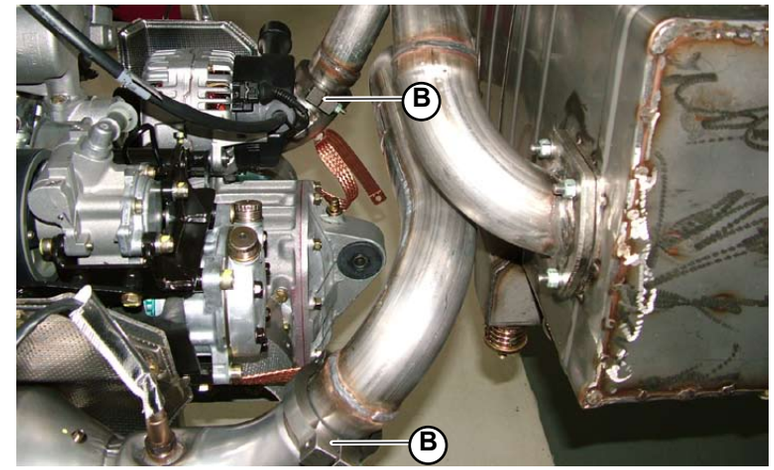

Fig.6

® Automobili Lamborghini S.p.A.
The information and procedures published below are strictly confidential and exclusively for the Lamborghini Dealer Network and Authorized Service Points. All copyrights are property of Automobili Lamborghini S.p.A based on copyright law. All of the PDF chapters in the WEB workshop manuals described below are based on information available at the time of publication. The company reserves the right to make updates and modifications. The following are prohibited: reprinting, reproduction, forwarding to unauthorized people and/or third parties, and translation, including partial, without written authorization from Automobili Lamborghini S.p.A.

D) Disassembling the exhaust terminals

Preliminary operations

- Lift the vehicle on the car lift **(000000)**.

Disassembling the terminals

1. Unscrew the 4 screws (**A-Fig.7**) and remove the exhaust system's safety panel.
2. Unscrew the 4 mounting screws (**B-Fig.7**).
3. Detach the 2 clamps securing the 2 exhaust terminals to the silencer (**C-Fig.7a**).
4. Remove the exhaust terminals (**D-Fig.7a**).

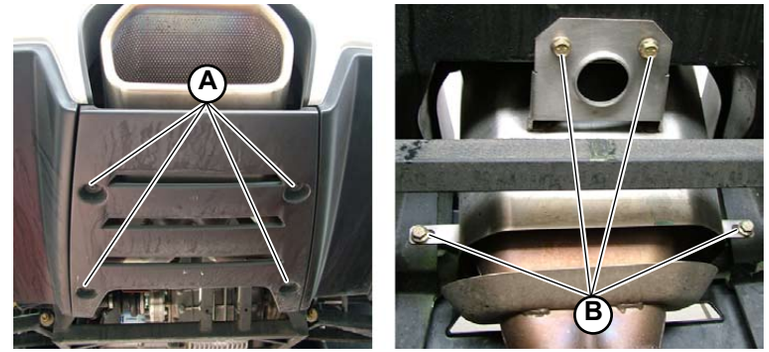

Fig.7

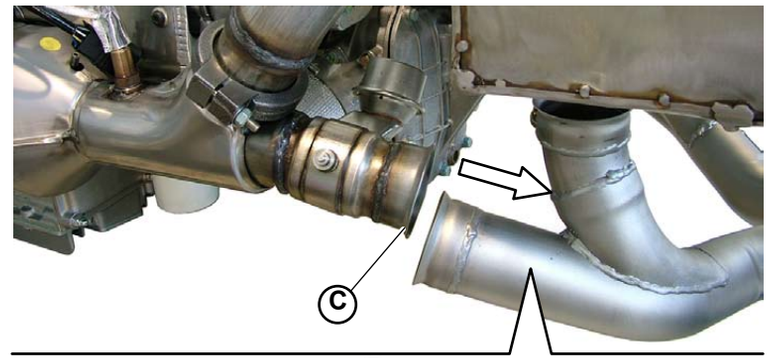

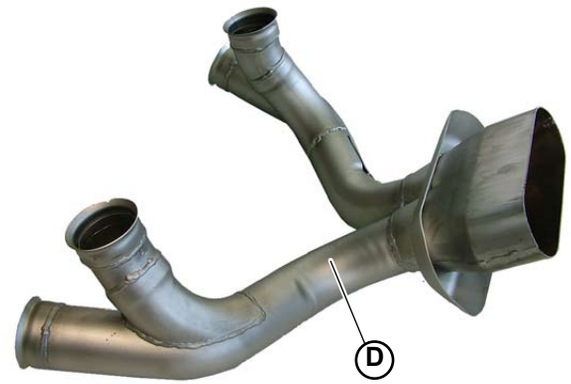

Fig.7a

STOP **Take care while disassembling the exhaust terminals: they consist in a single, inseparable unit.**

® Automobili Lamborghini S.p.A.
The information and procedures published below are strictly confidential and exclusively for the Lamborghini Dealer Network and Authorized Service Points. All copyrights are property of Automobili Lamborghini S.p.A based on copyright law. All of the PDF chapters in the WEB workshop manuals described below are based on information available at the time of publication. The company reserves the right to make updates and modifications. The following are prohibited: reprinting, reproduction, forwarding to unauthorized people and/or third parties, and translation, including partial, without written authorization from Automobili Lamborghini S.p.A.

E) Disassembling the 3-way pipes

Preliminary operations

- Remove the car engine **(010003).**
- Disassemble the catalytic converters **(013103)**.

Disassembling the pipes

1. Detach all 4 clamps (2 clamps (**A-Fig.8**) for each 3-way pipe) securing the 3-way pipe (**B-Fig.8**) to the front and rear exhaust manifolds. The connecting clamp (**C-Fig.8**) between the 3-way pipe and the catalytic converter was removed along with the catalytic converter.
2. Remove the 3-way pipe.

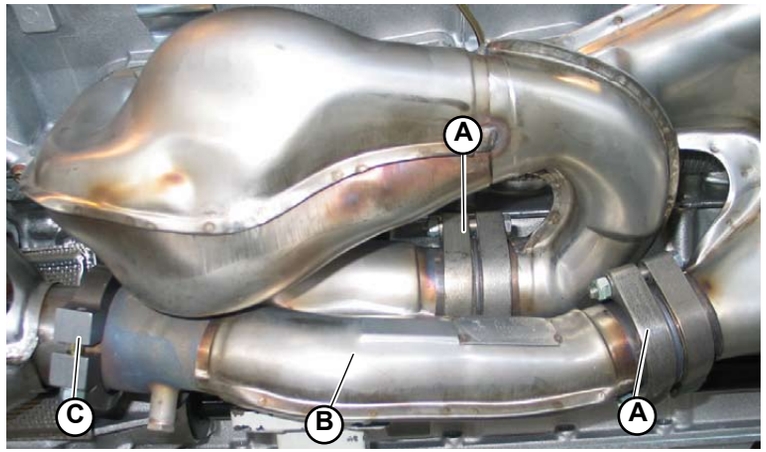

Fig.8

® Automobili Lamborghini S.p.A.
The information and procedures published below are strictly confidential and exclusively for the Lamborghini Dealer Network and Authorized Service Points. All copyrights are property of Automobili Lamborghini S.p.A based on copyright law. All of the PDF chapters in the WEB workshop manuals described below are based on information available at the time of publication. The company reserves the right to make updates and modifications. The following are prohibited: reprinting, reproduction, forwarding to unauthorized people and/or third parties, and translation, including partial, without written authorization from Automobili Lamborghini S.p.A.

F) Disassembling the exhaust manifolds

Preliminary operations

- Remove the car engine **(010003).**
- Disassemble the catalytic converters **(013103)**.
- Disassemble the 3-way pipes **(Point E)**.

Disassembling the manifolds

1. Unscrew the screws (**A-Fig.9**) securing the two exhaust manifolds, the front exhaust manifold (**B-Fig.9**) and the rear manifold (**C-Fig.9**), to the engine.
2. Remove the exhaust manifolds.

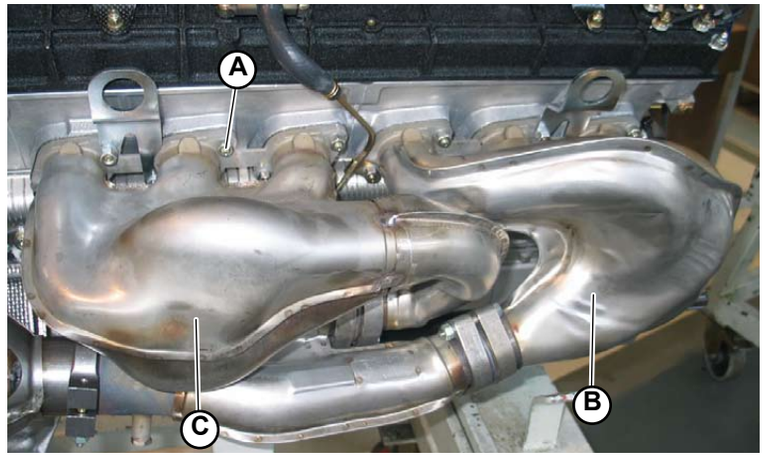

Fig.9

® Automobili Lamborghini S.p.A.
The information and procedures published below are strictly confidential and exclusively for the Lamborghini Dealer Network and Authorized Service Points. All copyrights are property of Automobili Lamborghini S.p.A based on copyright law. All of the PDF chapters in the WEB workshop manuals described below are based on information available at the time of publication. The company reserves the right to make updates and modifications. The following are prohibited: reprinting, reproduction, forwarding to unauthorized people and/or third parties, and translation, including partial, without written authorization from Automobili Lamborghini S.p.A.

G) Disassembling the secondary air assembly

The secondary air assembly consists in:
- Two auxiliary air valves **(A-Fig.10).**
- A pump **(B-Fig.10)**.
- Connection system consisting in pipes and unions **(C-Fig.10)**

Disassembling the auxiliary air valves

1. Disconnect the pipe (**C-Fig.10**).

2. To remove the auxiliary air valves **(A-Fig.10)** unscrew the two screws **(D-Fig.10)** securing them to the unions **(E-Fig.10)**.

Disassembling the pump

1. Remove the rear left wheel **(060103)**.

2. Remove the rear left wheel arch **(081303).**

3. Disconnect the connector (**F-Fig.10**).

4. Disconnect the pipe (**G-Fig.10**).

5. Unscrew the bracket fixing screw (**H-Fig.10**).

6. Release the pump from the bracket.

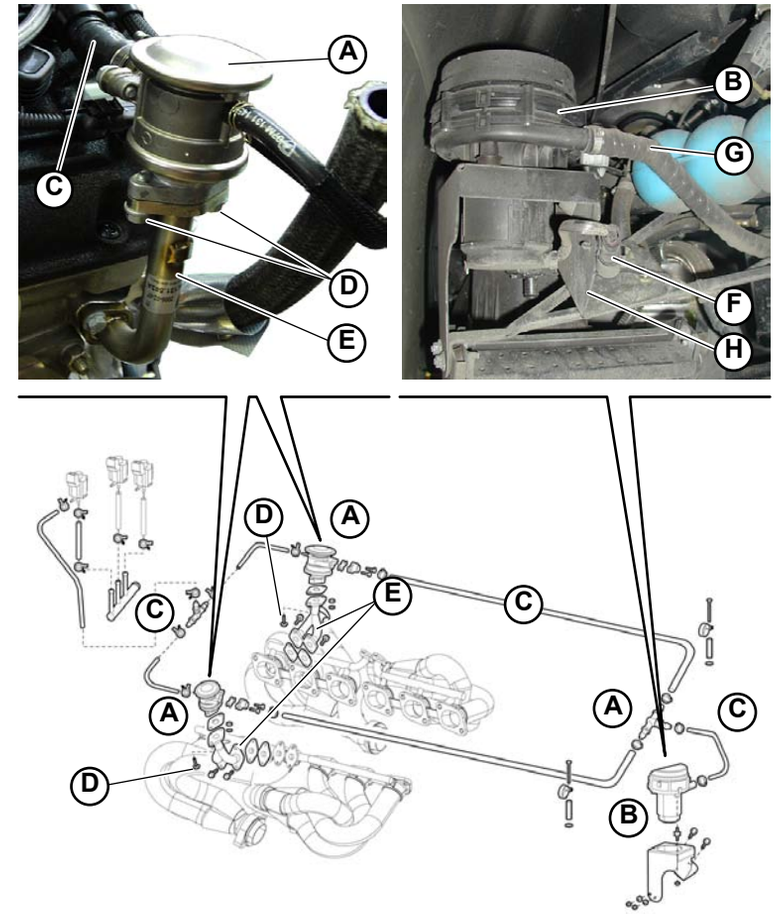

Fig.10

® Automobili Lamborghini S.p.A.
The information and procedures published below are strictly confidential and exclusively for the Lamborghini Dealer Network and Authorized Service Points. All copyrights are property of Automobili Lamborghini S.p.A based on copyright law. All of the PDF chapters in the WEB workshop manuals described below are based on information available at the time of publication. The company reserves the right to make updates and modifications. The following are prohibited: reprinting, reproduction, forwarding to unauthorized people and/or third parties, and translation, including partial, without written authorization from Automobili Lamborghini S.p.A.

This section explains how to assemble:

A) Exhaust manifolds
B) 3-way pipes
C) Exhaust terminals
D) Silencer
E) Silencer guard
F) Silencer safety grid
G) Secondary air assembly

® Automobili Lamborghini S.p.A.
The information and procedures published below are strictly confidential and exclusively for the Lamborghini Dealer Network and Authorized Service Points. All copyrights are property of Automobili Lamborghini S.p.A based on copyright law. All of the PDF chapters in the WEB workshop manuals described below are based on information available at the time of publication. The company reserves the right to make updates and modifications. The following are prohibited: reprinting, reproduction, forwarding to unauthorized people and/or third parties, and translation, including partial, without written authorization from Automobili Lamborghini S.p.A.

A) Assembling the exhaust manifolds

1. Position the exhaust manifolds.
2. Tighten the screws (**C-Fig.1**) to secure the exhaust manifolds, the front exhaust manifold (**A-Fig.1**) and the rear manifold (**B-Fig.1**), to the engine.

- Assemble the 3-way pipes **(Point B)**.
- Assemble the catalytic converters **(013105)**.
- Assemble the engine on the car **(010005).**

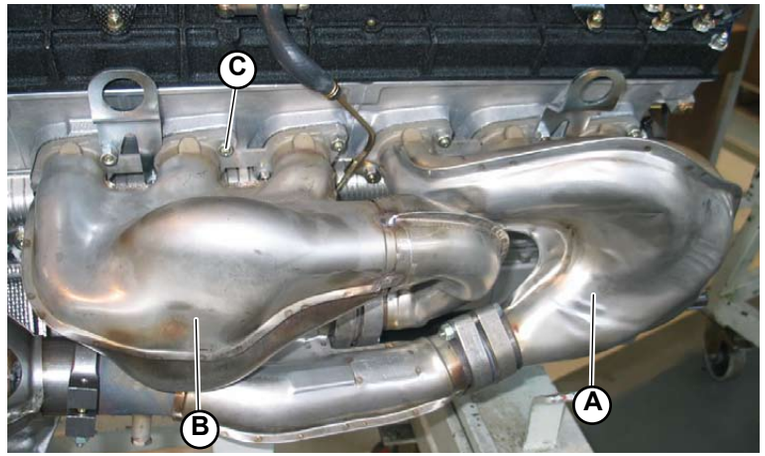

Fig.1

® Automobili Lamborghini S.p.A.
The information and procedures published below are strictly confidential and exclusively for the Lamborghini Dealer Network and Authorized Service Points. All copyrights are property of Automobili Lamborghini S.p.A based on copyright law. All of the PDF chapters in the WEB workshop manuals described below are based on information available at the time of publication. The company reserves the right to make updates and modifications. The following are prohibited: reprinting, reproduction, forwarding to unauthorized people and/or third parties, and translation, including partial, without written authorization from Automobili Lamborghini S.p.A.

B) Assembling the 3-way pipes

1. Position the 3-way pipe.
2. Connect all 4 clamps (2 clamps (**A-Fig.2**) for each 3-way pipe) to secure the 3-way pipe (**B-Fig.2**) to the front and rear exhaust manifolds. The connecting clamp (**C-Fig.2**) between the 3-way pipe and the catalytic converter is installed when the catalytic converter is assembled.

- Assemble the catalytic converters **(013105)**.
- Assemble the engine on the car **(010005).**

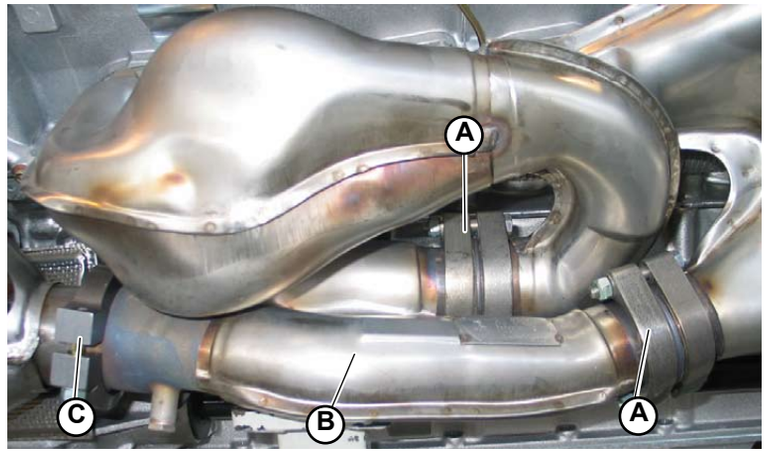

Fig.2

® Automobili Lamborghini S.p.A.
The information and procedures published below are strictly confidential and exclusively for the Lamborghini Dealer Network and Authorized Service Points. All copyrights are property of Automobili Lamborghini S.p.A based on copyright law. All of the PDF chapters in the WEB workshop manuals described below are based on information available at the time of publication. The company reserves the right to make updates and modifications. The following are prohibited: reprinting, reproduction, forwarding to unauthorized people and/or third parties, and translation, including partial, without written authorization from Automobili Lamborghini S.p.A.

C) Assembling the exhaust terminals

1. Position the 2 exhaust terminals (**A-Fig.3**).
2. Secure the 2 exhaust terminals to the silencer (**B-Fig.3**) using the 2 clamps.
3. Tighten the 4 mounting screws (**C-Fig.3a**).
4. Position the exhaust system's safety panel and tighten the 4 screws (**D-Fig.3a**).

Ensure the pipes are correctly aligned with the rear bumper.

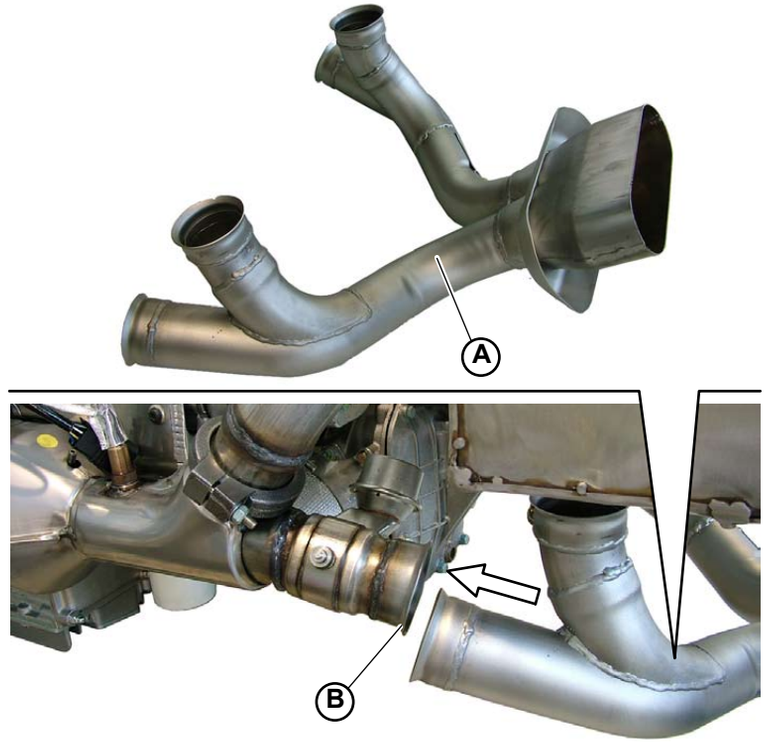

Fig.3

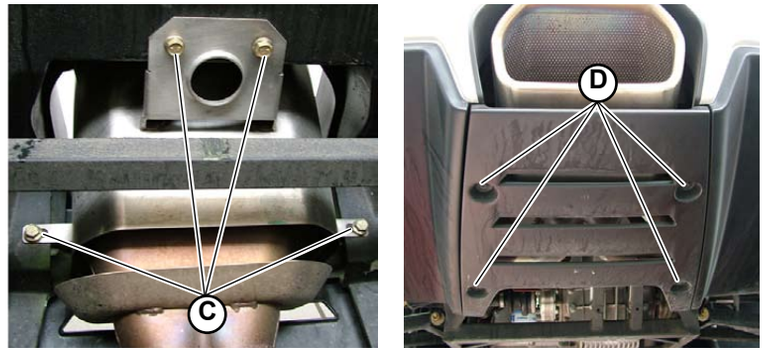

Fig.3a

® Automobili Lamborghini S.p.A.
The information and procedures published below are strictly confidential and exclusively for the Lamborghini Dealer Network and Authorized Service Points. All copyrights are property of Automobili Lamborghini S.p.A based on copyright law. All of the PDF chapters in the WEB workshop manuals described below are based on information available at the time of publication. The company reserves the right to make updates and modifications. The following are prohibited: reprinting, reproduction, forwarding to unauthorized people and/or third parties, and translation, including partial, without written authorization from Automobili Lamborghini S.p.A.

D) Assembling the silencer.

1. Connect the silencer to the catalytic converters using the pipes and clamps (**A-Fig.4**).
2. Use the 4 supports (**B-Fig.5**) to restrain the silencer to the frame.

- Assemble the two exhaust terminals **(Point C)**.
- Assemble the silencer guard **(Point E)**.
- Assemble the spoiler on the silencer **(082705)**.
- Assemble the silencer safety grid **(Point F)**.
- Assemble the central rear grid **(081305)**.

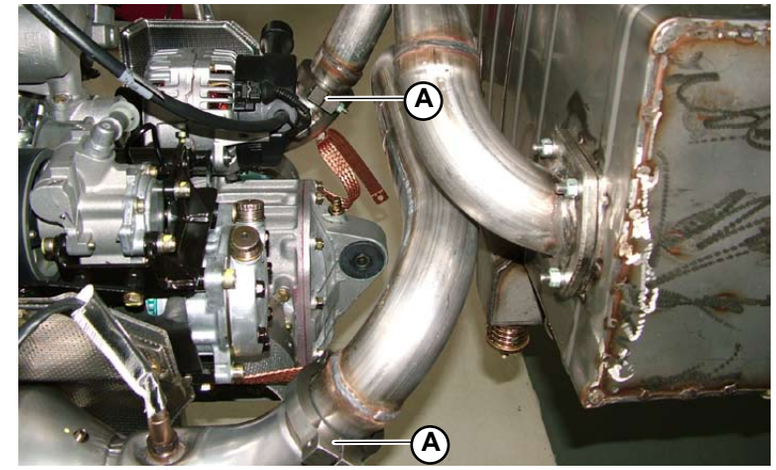

Fig.4

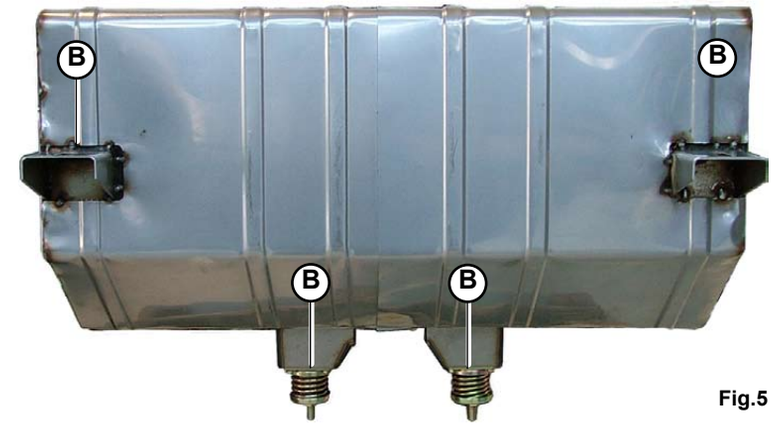

Fig.5

® Automobili Lamborghini S.p.A.
The information and procedures published below are strictly confidential and exclusively for the Lamborghini Dealer Network and Authorized Service Points. All copyrights are property of Automobili Lamborghini S.p.A based on copyright law. All of the PDF chapters in the WEB workshop manuals described below are based on information available at the time of publication. The company reserves the right to make updates and modifications. The following are prohibited: reprinting, reproduction, forwarding to unauthorized people and/or third parties, and translation, including partial, without written authorization from Automobili Lamborghini S.p.A.

E) Assembling the silencer guard

1. Position the silencer guard (**A-Fig.6**).
2. Tighten the 4 screws (**B-Fig.7/8**) securing the 2 side brackets (**C-Fig.7/8**) on the guard (2 screws for each bracket).
3. Tighten the 2 screws (**D-Fig.6**) on the guard above the silencer.

- Assemble the spoiler above the silencer **(082705)**.
- Assemble the silencer safety grid **(Point F)**.

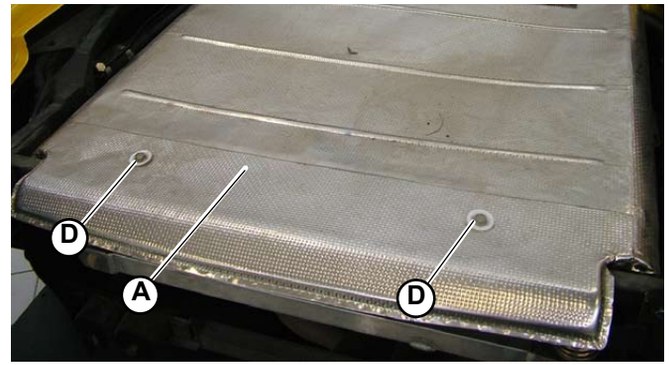

Fig.6

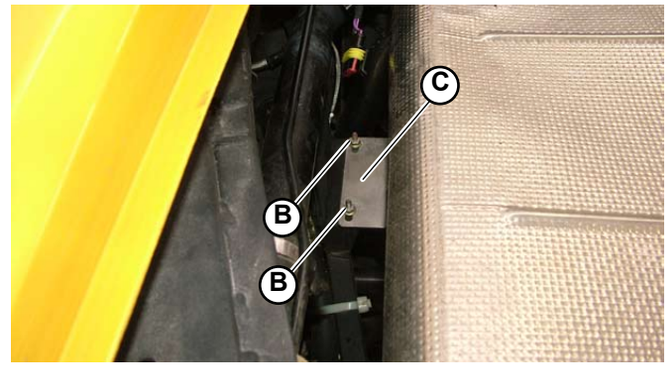

Fig.7

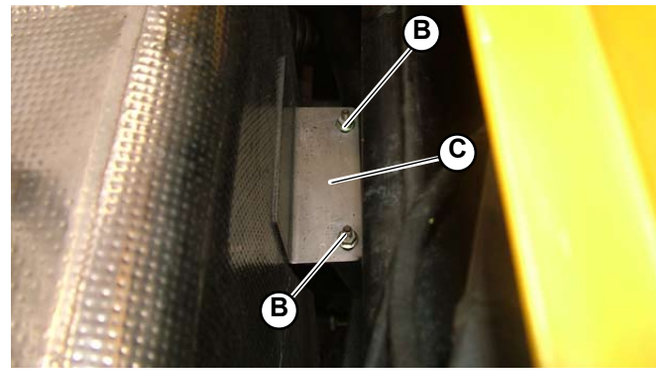

Fig.8

® Automobili Lamborghini S.p.A.
The information and procedures published below are strictly confidential and exclusively for the Lamborghini Dealer Network and Authorized Service Points. All copyrights are property of Automobili Lamborghini S.p.A based on copyright law. All of the PDF chapters in the WEB workshop manuals described below are based on information available at the time of publication. The company reserves the right to make updates and modifications. The following are prohibited: reprinting, reproduction, forwarding to unauthorized people and/or third parties, and translation, including partial, without written authorization from Automobili Lamborghini S.p.A.

F) Assembling the silencer safety grid

1. To secure the silencer safety grid to the car, tighten the 4 upper screws (**A-Fig.9**) and the 4 lower screws (**B-Fig.9**).

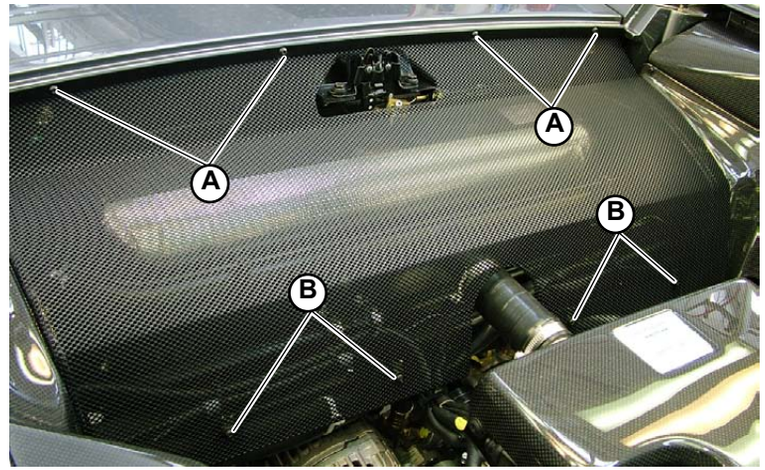

Fig.9

® Automobili Lamborghini S.p.A.
The information and procedures published below are strictly confidential and exclusively for the Lamborghini Dealer Network and Authorized Service Points. All copyrights are property of Automobili Lamborghini S.p.A based on copyright law. All of the PDF chapters in the WEB workshop manuals described below are based on information available at the time of publication. The company reserves the right to make updates and modifications. The following are prohibited: reprinting, reproduction, forwarding to unauthorized people and/or third parties, and translation, including partial, without written authorization from Automobili Lamborghini S.p.A.

G) Assembling the secondary air assembly

The secondary air assembly consists in:
- Two auxiliary air valves (**A-Fig.10**).
- A pump (**B-Fig.10**).
- Connection system consisting in pipes and unions (**C-Fig.10**).

Assembling the auxiliary air valves

1. Secure the auxiliary air valves (**A-Fig.10**) by acting on the two screws (**D-Fig.10**) fastening them to the unions (**E-Fig.10**).

2. Connect the pipe (**C-Fig.10**).

Assembling the pump:

1. Secure the pump to the bracket.

2. Secure the bracket (**H-Fig.10**) by acting on the two fixing screws.

3. Connect the pipe (**G-Fig.10**).

4. Connect the connector (**F-Fig.10**).

5. Assemble the rear left wheel arch **(081305)**.

6. Assemble the rear left wheel **(060105)**.

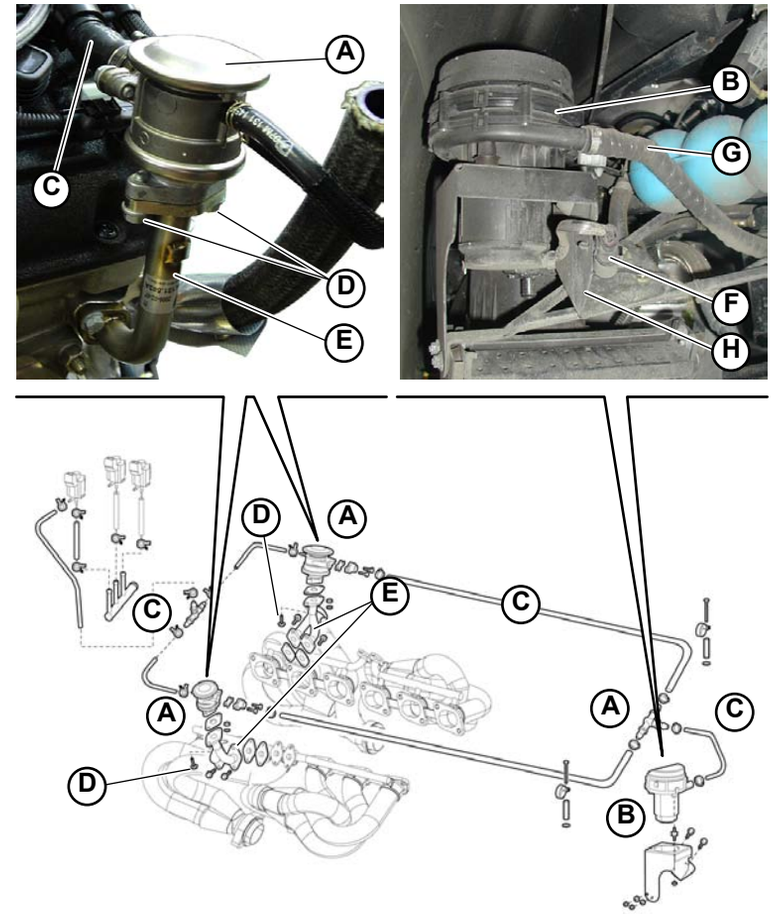

Fig.10

® Automobili Lamborghini S.p.A.
The information and procedures published below are strictly confidential and exclusively for the Lamborghini Dealer Network and Authorized Service Points. All copyrights are property of Automobili Lamborghini S.p.A based on copyright law. All of the PDF chapters in the WEB workshop manuals described below are based on information available at the time of publication. The company reserves the right to make updates and modifications. The following are prohibited: reprinting, reproduction, forwarding to unauthorized people and/or third parties, and translation, including partial, without written authorization from Automobili Lamborghini S.p.A.

Oxygen Sensor

It is a sensor generating an electric signal according to the ratio between the oxygen inside the exhaust gas and the oxygen inside the outside air. By means of this sensor it is possible to measure the deviation from the stoichometric ratio (lambda ratio) of the air – fuel mixture sent to the cylinders.
Each cylinder bank has two oxygen sensors: one is installed on the exhaust gas inlet coupling in the catalytic converter of the exhaust system, the other on the converter outlet.

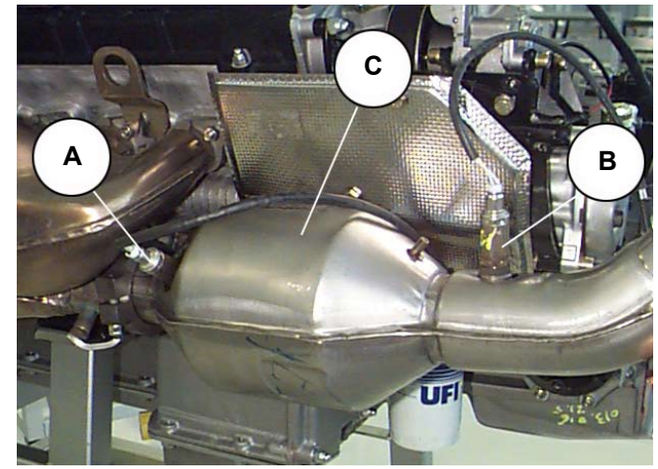

Fig.1

A.	Pre-catalyst oxygen sensor	(LINEAR)
B.	Post-catalyst oxygen sensor	(ON-OFF)
C.	Catalyst	

ON/OFF oxygen sensor operation diagram (post-catalytic converter)

- The main element is a ceramic body coated on both sides (Nernst cell).
- The coatings act as electrodes.
- One layer of electrodes is in contact with external air, the other with the exhaust gases.
- The difference between the oxygen contained in the outside air and that in the exhaust gases generates the sensor's voltage.

Use LDAS-32 **(109100)** to check the POST-catalytic converter oxygen sensors.

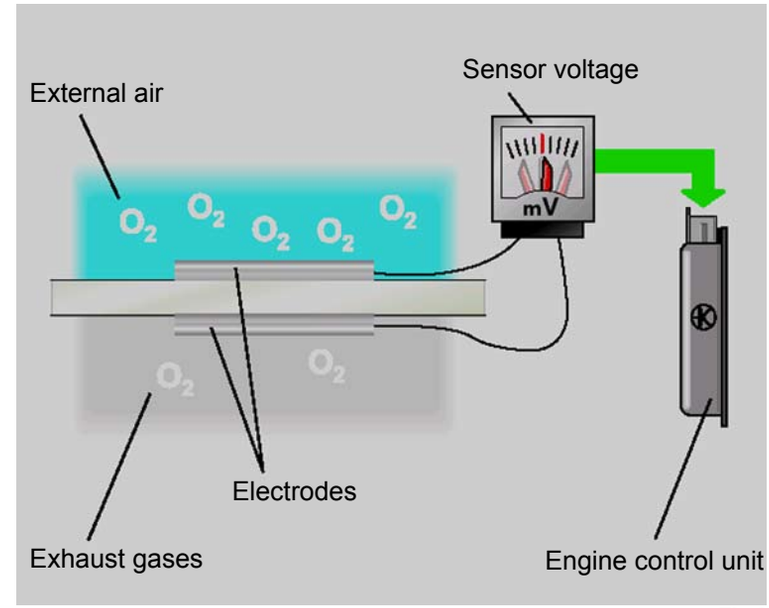

Fig.2

® Automobili Lamborghini S.p.A.
The information and procedures published below are strictly confidential and exclusively for the Lamborghini Dealer Network and Authorized Service Points. All copyrights are property of Automobili Lamborghini S.p.A based on copyright law. All of the PDF chapters in the WEB workshop manuals described below are based on information available at the time of publication. The company reserves the right to make updates and modifications. The following are prohibited: reprinting, reproduction, forwarding to unauthorized people and/or third parties, and translation, including partial, without written authorization from Automobili Lamborghini S.p.A.

LINEAR oxygen sensor operation diagram (pre-catalytic converter)

Oxygen sensor adjustment with broadband oxygen sensor:

- The pumping effect of the pump cell is a purely physical process.
- No mechanical component.
- The positive voltage of the pump cell attracts negative oxygen ions through the oxygen-permeable ceramic.

Use LDAS-32 **(109100)** to check the PRE-catalytic converter oxygen sensors.

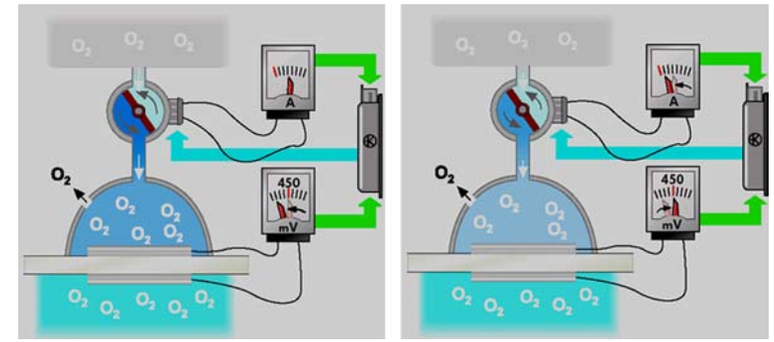

Fig.3

® Automobili Lamborghini S.p.A.
The information and procedures published below are strictly confidential and exclusively for the Lamborghini Dealer Network and Authorized Service Points. All copyrights are property of Automobili Lamborghini S.p.A based on copyright law. All of the PDF chapters in the WEB workshop manuals described below are based on information available at the time of publication. The company reserves the right to make updates and modifications. The following are prohibited: reprinting, reproduction, forwarding to unauthorized people and/or third parties, and translation, including partial, without written authorization from Automobili Lamborghini S.p.A.

Oxygen sensors disassembly

pre-catalytic oxygen sensors	(LINEAR)
post-catalytic oxygen sensors	(ON-OFF)

The oxygen sensors located on the left catalytic converter require a disassembly sequence that differs from those located on the right catalytic converter:

A) Oxygen sensors on right catalytic converter

Preliminary operations
- Remove the silencer safety grid **(025103)**.

Sensor disassemble
1. Disconnect the two oxygen sensors **(A-Fig.1)**.

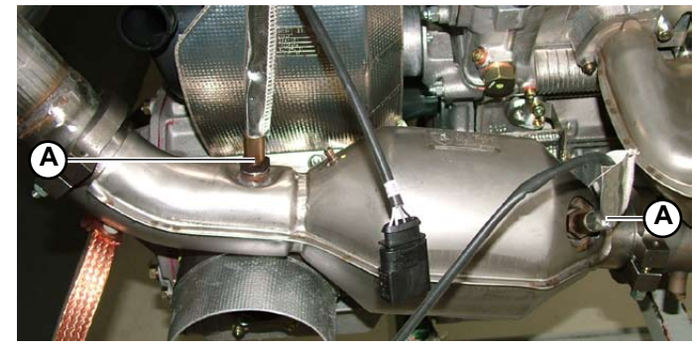

Fig.1

B) Oxygen sensors on left catalytic converter

Preliminary operations (necessary only for removing the post-catalytic converter oxygen sensor)
- Lift the vehicle on the car lift **(000000)**.
- Remove the left rear wheel **(060103)**.
- Remove the stone-guard of the left rear wheel **(082103)**.

Sensor disassemble
1. Disconnect the two oxygen sensors **(B-Fig.2)**. The pre-catalytic converter oxygen sensor can be directly disconnected from the hood; the post-catalytic converter oxygen sensor, rather, requires the removal of the left rear stone-guard and wheel.

Fig.2

® Automobili Lamborghini S.p.A.
The information and procedures published below are strictly confidential and exclusively for the Lamborghini Dealer Network and Authorized Service Points. All copyrights are property of Automobili Lamborghini S.p.A based on copyright law. All of the PDF chapters in the WEB workshop manuals described below are based on information available at the time of publication. The company reserves the right to make updates and modifications. The following are prohibited: reprinting, reproduction, forwarding to unauthorized people and/or third parties, and translation, including partial, without written authorization from Automobili Lamborghini S.p.A.

Oxygen sensors assembly

pre-catalytic oxygen sensors	(LINEAR)
post-catalytic oxygen sensors	(ON-OFF)

The oxygen sensors located on the left catalytic converter require an assembly sequence that differs from those located on the right catalytic converter:

A) Oxygen sensors on right catalytic converter

1. Connect the two oxygen sensors **(A-Fig.1)**.

- Assemble the silencer safety grid **(025105)**.

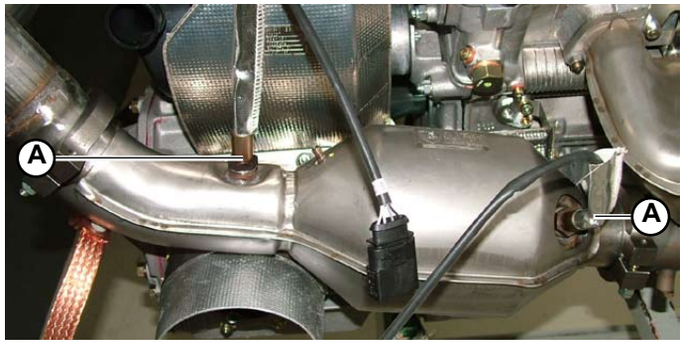

Fig.1

B) Oxygen sensors on left catalytic converter

1. Connect the two oxygen sensors **(B-Fig.2)**. The pre-catalytic oxygen sensor can be directly connected to the hood; the post-catalytic converter oxygen sensor, rather, must be connected with the left rear stone-guard and wheel disassembled.

- Assemble the stone-guard of the left rear wheel **(082105)**.
- Assemble the left rear wheel **(060105)**.

Fig.2

® Automobili Lamborghini S.p.A.
The information and procedures published below are strictly confidential and exclusively for the Lamborghini Dealer Network and Authorized Service Points. All copyrights are property of Automobili Lamborghini S.p.A based on copyright law. All of the PDF chapters in the WEB workshop manuals described below are based on information available at the time of publication. The company reserves the right to make updates and modifications. The following are prohibited: reprinting, reproduction, forwarding to unauthorized people and/or third parties, and translation, including partial, without written authorization from Automobili Lamborghini S.p.A.

Temperature sensors disassembly

There are a total of 2 catalytic converter (thermocouple) temperature sensors on the car (one for each catalytic converter).
- right catalytic converter sensor (**A-Fig.1**).
- left catalytic converter sensor (**B-Fig.1**).

The connection ECU, called the cold junction, is located on the left rear side of the vehicle in the engine compartment area; this ECU, to which the temperature sensors are connected, has a single pre-wired connector (**C-Fig.2**):
- yellow for cylinder bank 2.
- white for cylinder bank 1.

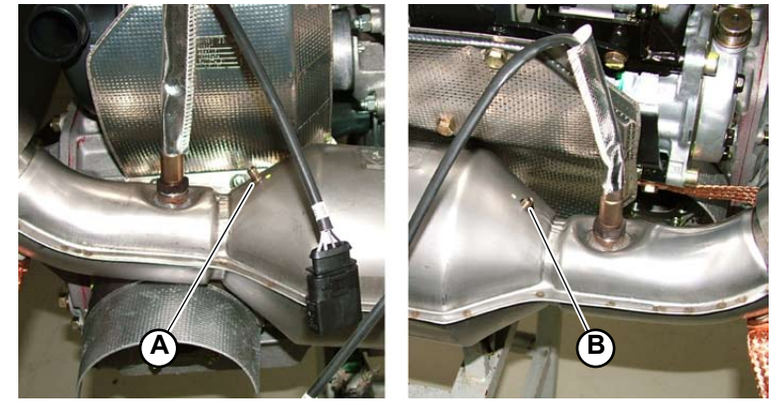

Fig.1

1. Disconnect the sensors of both catalytic converters directly from the engine hood, disconnecting the connector (**C-Fig.2**).

Fig.2

® Automobili Lamborghini S.p.A.
The information and procedures published below are strictly confidential and exclusively for the Lamborghini Dealer Network and Authorized Service Points. All copyrights are property of Automobili Lamborghini S.p.A based on copyright law. All of the PDF chapters in the WEB workshop manuals described below are based on information available at the time of publication. The company reserves the right to make updates and modifications. The following are prohibited: reprinting, reproduction, forwarding to unauthorized people and/or third parties, and translation, including partial, without written authorization from Automobili Lamborghini S.p.A.

Temperature sensors assembly

There are a total of 2 catalytic converter (thermocouple) temperature sensors on the car (one for each catalytic converter).
- right catalytic converter sensor (**A-Fig.1**).
- left catalytic converter sensor (**B-Fig.1**).

The connection ECU, called the cold junction, is located on the left rear side of the vehicle in the engine compartment area; this ECU, to which the temperature sensors are connected, has a single pre-wired connector (**C-Fig.2**):
- yellow for cylinder bank 2.
- white for cylinder bank 1.

1. Connect the sensors of both catalytic converters directly onto the engine hood, reconnecting the connector (**C-Fig.2**).

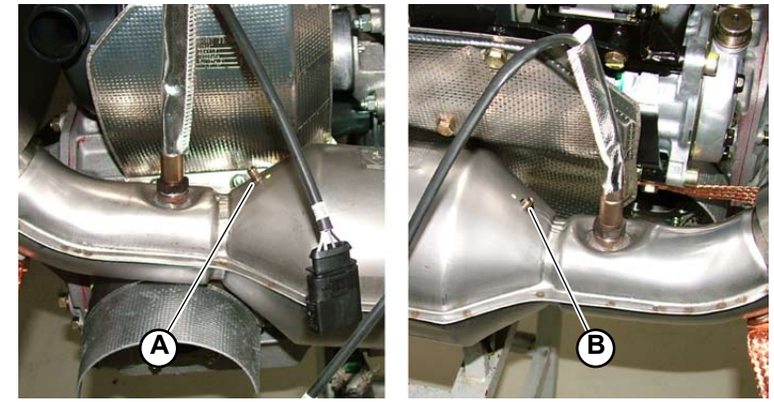

Fig.1

Fig.2

® Automobili Lamborghini S.p.A.
The information and procedures published below are strictly confidential and exclusively for the Lamborghini Dealer Network and Authorized Service Points. All copyrights are property of Automobili Lamborghini S.p.A based on copyright law. All of the PDF chapters in the WEB workshop manuals described below are based on information available at the time of publication. The company reserves the right to make updates and modifications. The following are prohibited: reprinting, reproduction, forwarding to unauthorized people and/or third parties, and translation, including partial, without written authorization from Automobili Lamborghini S.p.A.

Air conditioning system

The air conditioning system provided with the vehicle holds the temperature and air flow in the passenger compartment to the values set by the driver through a special push-button panel.
The air conditioning system has the following features:

- automatic temperature-ventilation-air distribution control functions;
- with recirculation function;
- with air flow distribution function.

The system operation is controlled by a special control unit through the driver's commands set on a push-button panel fitted on the tunnel.

Air conditioning push-button panel (Fig.1)	
A.	TEMP + button
B.	TEMP – button
C.	AIR + button
D.	AIR – button
E.	VENT button
F.	BI-LEVEL button
G.	HEAT button
H.	DEFROST button
I.	TEXT button
L.	AUTO button
M.	RECIRCULATION button
N.	Display

Fig.1

® Automobili Lamborghini S.p.A.
The information and procedures published below are strictly confidential and exclusively for the Lamborghini Dealer Network and Authorized Service Points. All copyrights are property of Automobili Lamborghini S.p.A based on copyright law. All of the PDF chapters in the WEB workshop manuals described below are based on information available at the time of publication. The company reserves the right to make updates and modifications. The following are prohibited: reprinting, reproduction, forwarding to unauthorized people and/or third parties, and translation, including partial, without written authorization from Automobili Lamborghini S.p.A.

The air conditioning unit, fitted under the dashboard is equipped with:

- a heating radiator connected to the engine cooling system;
- a conditioning evaporator connected to the car conditioning system;
- motor fans and flaps for ventilation and air distribution control;
- internal and outside temperature sensor and solar irradiation sensor for temperature control.

Air conditioning unit (Fig.2)	
A.	Solar irradiation sensor (IRR)
B.	Recirculation function actuator
C.	Defrost function actuator
D.	Frost sensor temperature sensor (TSAB)
E.	Upper vent actuator
F.	Outside temperature sensor (TE)
G.	Passenger compartment temperature sensor (TA)
H.	Lower vent actuator
I.	Temperature sensor at upper vents (TT1)
L.	Temperature sensor at lower vents (TT2)
M.	Expansion valve
N.	Motor fan regulator
O.	Motor fan

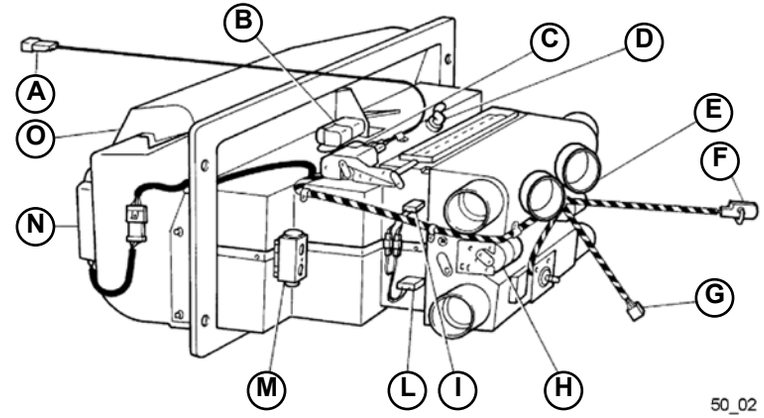

Fig.2

® Automobili Lamborghini S.p.A.
The information and procedures published below are strictly confidential and exclusively for the Lamborghini Dealer Network and Authorized Service Points. All copyrights are property of Automobili Lamborghini S.p.A based on copyright law. All of the PDF chapters in the WEB workshop manuals described below are based on information available at the time of publication. The company reserves the right to make updates and modifications. The following are prohibited: reprinting, reproduction, forwarding to unauthorized people and/or third parties, and translation, including partial, without written authorization from Automobili Lamborghini S.p.A.

The heating radiator is supplied by the engine coolant taken from cylinder head outlet through a special solenoid valve proportioning its flow rate. The minimum flow rate through the radiator is guaranteed by a special minimum pump fitted on the radiator expansion tank return line.

Heating system (Fig.3)	
A.	Air conditioning unit
B.	Heating solenoid valve
C.	Minimum flow rate pump
D.	Line to radiator expansion tank
E.	Head water outlet line

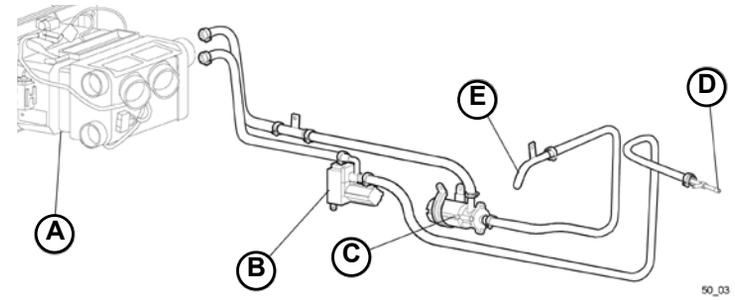

Fig.3

® Automobili Lamborghini S.p.A.
The information and procedures published below are strictly confidential and exclusively for the Lamborghini Dealer Network and Authorized Service Points. All copyrights are property of Automobili Lamborghini S.p.A based on copyright law. All of the PDF chapters in the WEB workshop manuals described below are based on information available at the time of publication. The company reserves the right to make updates and modifications. The following are prohibited: reprinting, reproduction, forwarding to unauthorized people and/or third parties, and translation, including partial, without written authorization from Automobili Lamborghini S.p.A.

The air conditioning built-in evaporator is supplied by a compressor fitted behind the engine. The system condenser is installed in front of the left rear radiator of the engine cooling system.
The coolant used by the air conditioning system is R134a.

Air conditioning system (Fig.4)	
A.	Air conditioning unit
B.	Compressor
C.	Condenser
D.	Receiver-drier
E.	Coolant filling/draining valve

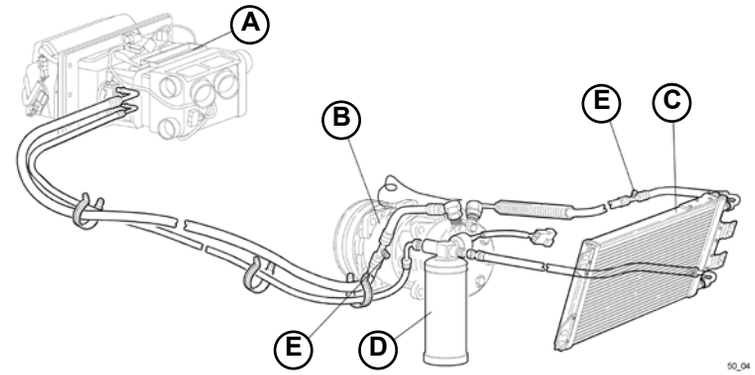

Fig.4

® Automobili Lamborghini S.p.A.
The information and procedures published below are strictly confidential and exclusively for the Lamborghini Dealer Network and Authorized Service Points. All copyrights are property of Automobili Lamborghini S.p.A based on copyright law. All of the PDF chapters in the WEB workshop manuals described below are based on information available at the time of publication. The company reserves the right to make updates and modifications. The following are prohibited: reprinting, reproduction, forwarding to unauthorized people and/or third parties, and translation, including partial, without written authorization from Automobili Lamborghini S.p.A.

The air is distributed in the passenger compartment via a set of vents that guarantee proper air recirculation, heating and conditioning (**Fig.5**).

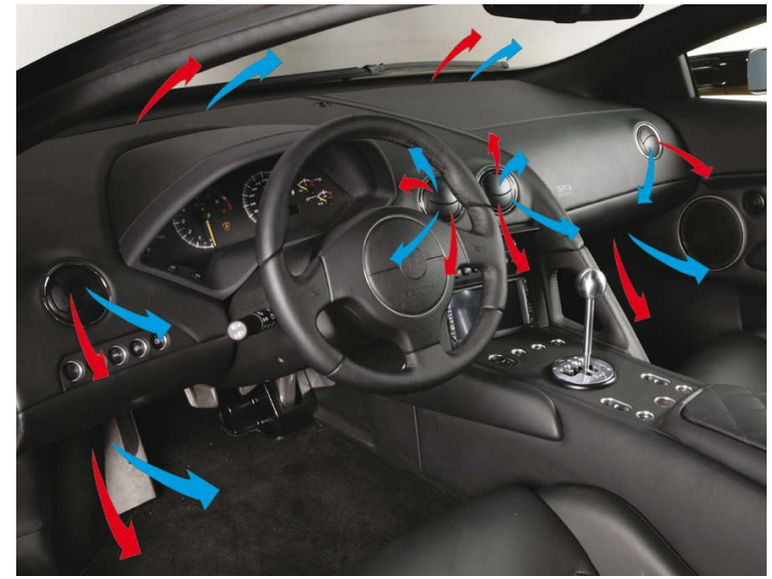

Fig.5

® Automobili Lamborghini S.p.A.
The information and procedures published below are strictly confidential and exclusively for the Lamborghini Dealer Network and Authorized Service Points. All copyrights are property of Automobili Lamborghini S.p.A based on copyright law. All of the PDF chapters in the WEB workshop manuals described below are based on information available at the time of publication. The company reserves the right to make updates and modifications. The following are prohibited: reprinting, reproduction, forwarding to unauthorized people and/or third parties, and translation, including partial, without written authorization from Automobili Lamborghini S.p.A.

General Overview

This is the most common operating condition. Temperature settings are made automatically to ensure maximum comfort for occupants.

Under this condition the display shows (Fig.6):
requested temperature
recirculation status
air distribution status
ventilation status
AUTO message next to ventilation and air distribution.

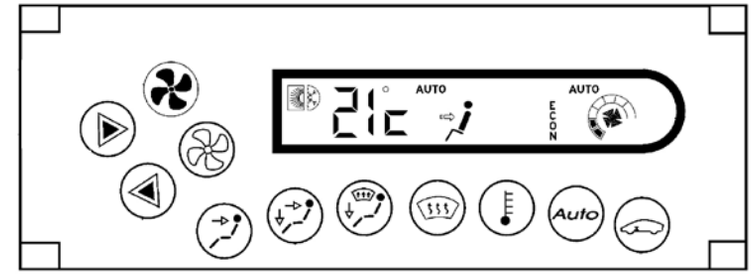

Fig.6

® Automobili Lamborghini S.p.A.
The information and procedures published below are strictly confidential and exclusively for the Lamborghini Dealer Network and Authorized Service Points. All copyrights are property of Automobili Lamborghini S.p.A based on copyright law. All of the PDF chapters in the WEB workshop manuals described below are based on information available at the time of publication. The company reserves the right to make updates and modifications. The following are prohibited: reprinting, reproduction, forwarding to unauthorized people and/or third parties, and translation, including partial, without written authorization from Automobili Lamborghini S.p.A.

Start-up transient strategy (cold engine)

The start-up transient strategy is a special operating method designed to ensure comfort to occupants also when the passenger compartment heating system is not able to work.
This is because at cold starting the system does not have an adequate source of heat. Starting the climate control under such conditions would entail letting in the passenger compartment a considerable amount of cold air which may annoy occupants.

In such condition the system automatically sets to:

- maximum heat;
- minimum ventilation;
- DEF air flow distribution;
- recirculation open;
- compressor on.

The system holds these settings until the engine water temperature reaches a value which is sufficient for automatic climate control.

® Automobili Lamborghini S.p.A.
The information and procedures published below are strictly confidential and exclusively for the Lamborghini Dealer Network and Authorized Service Points. All copyrights are property of Automobili Lamborghini S.p.A based on copyright law. All of the PDF chapters in the WEB workshop manuals described below are based on information available at the time of publication. The company reserves the right to make updates and modifications. The following are prohibited: reprinting, reproduction, forwarding to unauthorized people and/or third parties, and translation, including partial, without written authorization from Automobili Lamborghini S.p.A.

Temperature

The system adjusts the temperature at the vents to reach the required value (set on the display) according to the following parameters:

- passenger compartment temperature (TA);
- requested temperature (TR);
- outside temperature (TE);
- fan speed (Q);
- solar irradiation (IRR).

The temperature is computed by means of thermal balance equations in the passenger compartment by using suitable mathematical algorithms.
The adjustment range goes from 16°C (LO) to 31°C (HI).

STOP

System operation also depends on the outside temperature.
Actually, with outside temperatures below 16°C, even if the LO value is selected, the system delivers air warmer than the outside one.
Likewise, with outside temperatures over 31°C, even if the HI value is selected, the system delivers air colder than the outside one

® Automobili Lamborghini S.p.A.
The information and procedures published below are strictly confidential and exclusively for the Lamborghini Dealer Network and Authorized Service Points. All copyrights are property of Automobili Lamborghini S.p.A based on copyright law. All of the PDF chapters in the WEB workshop manuals described below are based on information available at the time of publication. The company reserves the right to make updates and modifications. The following are prohibited: reprinting, reproduction, forwarding to unauthorized people and/or third parties, and translation, including partial, without written authorization from Automobili Lamborghini S.p.A.

Ventilation

The fan speed is computed according to the following parameters:

- Passenger compartment temperature;
- Requested temperature;
- Outside temperature;
- Solar irradiation.

The fan speed can be set to eight levels, each of which is a 10% increase of the maximum flow rate, starting from 30%.

® Automobili Lamborghini S.p.A.
The information and procedures published below are strictly confidential and exclusively for the Lamborghini Dealer Network and Authorized Service Points. All copyrights are property of Automobili Lamborghini S.p.A based on copyright law. All of the PDF chapters in the WEB workshop manuals described below are based on information available at the time of publication. The company reserves the right to make updates and modifications. The following are prohibited: reprinting, reproduction, forwarding to unauthorized people and/or third parties, and translation, including partial, without written authorization from Automobili Lamborghini S.p.A.

Air distribution

For computing air distribution, the automatic climate control system considers the air temperature at vent outlet, given the general rule that in order to ensure comfort air should come out from the “lower” vents as the temperature increases.

In particular:

- with warm air (TT>50 °C), the air flow should reach the passenger from the upper and lower vents (HEAT);
- with cool air (TT<30°C), the air flow should be frontal (VENT);
- at intermediate temperatures, a “foot/face” air flow pattern is adopted (BI-LEVEL).

The air flow distribution pattern is adjusted on the basis of a hysterisis threshold to ensure greater stability in the system.

® Automobili Lamborghini S.p.A.
The information and procedures published below are strictly confidential and exclusively for the Lamborghini Dealer Network and Authorized Service Points. All copyrights are property of Automobili Lamborghini S.p.A based on copyright law. All of the PDF chapters in the WEB workshop manuals described below are based on information available at the time of publication. The company reserves the right to make updates and modifications. The following are prohibited: reprinting, reproduction, forwarding to unauthorized people and/or third parties, and translation, including partial, without written authorization from Automobili Lamborghini S.p.A.

Recirculation

The system automatically activates the recirculation function when the following conditions are present at the same time:

- outside temperature >= 28 °C;
- inside temperature < outside temperature;
- compressor on.

The system opens the recirculation flap to let in outside air when the outside temperature drops below 26 °C.
The recirculation flap will be opened in any case after thirty consecutive minutes for two minutes and then closed again to let fresh air into the passenger compartment. The recirculation function symbol on the display will flash when this occurs.

® Automobili Lamborghini S.p.A.
The information and procedures published below are strictly confidential and exclusively for the Lamborghini Dealer Network and Authorized Service Points. All copyrights are property of Automobili Lamborghini S.p.A based on copyright law. All of the PDF chapters in the WEB workshop manuals described below are based on information available at the time of publication. The company reserves the right to make updates and modifications. The following are prohibited: reprinting, reproduction, forwarding to unauthorized people and/or third parties, and translation, including partial, without written authorization from Automobili Lamborghini S.p.A.

In HI mode, the system provides the maximum possible heat output.
In particular, the system sets to the following conditions:

- maximum air temperature at vents allowed by the system;
- maximum ventilation;
- compressor off;
- recirculation open;
- HEAT air flow distribution.

The system will remain in HI mode until a new command is received from the user. In this case, manual settings (fan speed, air flow and recirculation) will be allowed and will have priority over the automatic settings.

® Automobili Lamborghini S.p.A.
The information and procedures published below are strictly confidential and exclusively for the Lamborghini Dealer Network and Authorized Service Points. All copyrights are property of Automobili Lamborghini S.p.A based on copyright law. All of the PDF chapters in the WEB workshop manuals described below are based on information available at the time of publication. The company reserves the right to make updates and modifications. The following are prohibited: reprinting, reproduction, forwarding to unauthorized people and/or third parties, and translation, including partial, without written authorization from Automobili Lamborghini S.p.A.

In LO mode, the system provides the maximum heat output available for cooling.
In particular, the system sets to the following conditions:

- minimum air temperature at vents allowed by the system;
- maximum ventilation;
- compressor on;
- automatic recirculation;
- VENT air flow distribution.

The system will remain in LO mode until a new command is received by the user. In this case, manual settings (fan speed, air flow and recirculation) will be allowed and will have priority over the automatic settings.
The recirculation control will always be automatic.

® Automobili Lamborghini S.p.A.
The information and procedures published below are strictly confidential and exclusively for the Lamborghini Dealer Network and Authorized Service Points. All copyrights are property of Automobili Lamborghini S.p.A based on copyright law. All of the PDF chapters in the WEB workshop manuals described below are based on information available at the time of publication. The company reserves the right to make updates and modifications. The following are prohibited: reprinting, reproduction, forwarding to unauthorized people and/or third parties, and translation, including partial, without written authorization from Automobili Lamborghini S.p.A.

Compressor

The compressor is switched off by the system when the temperature inside the evaporator reaches values which may lead to the formation of ice since this could affect the proper operation of the system.
The compressor switch-off threshold is fixed at 2 °C. The compressor will be switched on again once a temperature of 4 °C is reached.

The compressor will always be switched on in MAX-DEF mode and will automatically be switched off during normal operation under the following conditions:

- fan off;
- HI system status.

An error concerning the frost sensor (short circuit or open circuit) will cause the compressor coupling disconnection.
The compressor will be automatically restarted by the system when normal conditions are restored.
The compressor will be activated for a few seconds every 30 minutes to ensure lubrication also when it is off.

® Automobili Lamborghini S.p.A.
The information and procedures published below are strictly confidential and exclusively for the Lamborghini Dealer Network and Authorized Service Points. All copyrights are property of Automobili Lamborghini S.p.A based on copyright law. All of the PDF chapters in the WEB workshop manuals described below are based on information available at the time of publication. The company reserves the right to make updates and modifications. The following are prohibited: reprinting, reproduction, forwarding to unauthorized people and/or third parties, and translation, including partial, without written authorization from Automobili Lamborghini S.p.A.

In manual ventilation or distribution operation, the message MANUAL will appear on the display next to the corresponding section. The meaning of the remaining information will be the same as in automatic operation. The manual recirculation selection is shown by the corresponding status indication.

In manual settings it is important to remember that:

- **Manual ventilation** selection will always have priority over automatic operation. The message MANUAL will appear on the display over the air distribution indication.
- **Recirculation** will be switched on whenever the user presses the related button. In any case, the recirculation flap will be opened for two minutes after it has been closed for thirty consecutive minutes and then it will be closed again to let fresh air into the passenger compartment.
- **The compressor** will be switched off when the AUTO button is pressed. In this case, the message ECON will appear on the display. This message will flash if the temperature at the vents required for reaching the requested temperature (set on the display) is lower than the temperature of the air at climate control module intake, indicating that the requested temperature cannot be reached while the compressor is off. The ECON message will appear fixed if, on the other hand, compressor operation is not needed to reach the required temperature. The ECON message will disappear when the AUTO button is pressed again to indicate that the compressor is operating automatically. The compressor will be operated in any case for a few seconds every 30 minutes to ensure lubrication also when it is off.
- The **MAX-DEF** mode, switched on by holding the DEF button pressed for two seconds, is used to demist the windscreen. The following conditions are established when the function is on:
  - compressor on;
  - DEF air flow distribution;
  - recirculation open;
  - maximum fan speed.

  The air temperature at the vents is set to the maximum if the outside temperature is lower than 15 °C.
  The system will stay in MAX-DEF mode for five minutes and then it will return to the previous settings.
  The transition to the initial status can be controlled by pressing either the TEMP +/-, AIR +/- or air flow distribution buttons.

® Automobili Lamborghini S.p.A.
The information and procedures published below are strictly confidential and exclusively for the Lamborghini Dealer Network and Authorized Service Points. All copyrights are property of Automobili Lamborghini S.p.A based on copyright law. All of the PDF chapters in the WEB workshop manuals described below are based on information available at the time of publication. The company reserves the right to make updates and modifications. The following are prohibited: reprinting, reproduction, forwarding to unauthorized people and/or third parties, and translation, including partial, without written authorization from Automobili Lamborghini S.p.A.

In normal conditions, the temperatures (outside and requested) are shown in Celsius degrees.
The display can be switched to Fahrenheit degrees at any time as follows:

- Hold the outside temperature display request button pressed for approximately six seconds. After this time, the requested temperature will be displayed in Fahrenheit degrees and the temperature measurement unit will be switched to “E”.
- Power down the system by turning the ignition key to OFF;
- Power up the system by turning the ignition key to ON.

The control unit will display the (outside and requested) temperatures in Fahrenheit.

The reverse procedure is possible at any time according to the same method.

® Automobili Lamborghini S.p.A.
The information and procedures published below are strictly confidential and exclusively for the Lamborghini Dealer Network and Authorized Service Points. All copyrights are property of Automobili Lamborghini S.p.A based on copyright law. All of the PDF chapters in the WEB workshop manuals described below are based on information available at the time of publication. The company reserves the right to make updates and modifications. The following are prohibited: reprinting, reproduction, forwarding to unauthorized people and/or third parties, and translation, including partial, without written authorization from Automobili Lamborghini S.p.A.

Air conditioning system check

Check the following fundamental aspects to prevent malfunctioning and ensure the correct system operation:

- Keep the climate control system control unit away from sources of high heat, e.g. in a painting oven (remember that it is good practice to remove all electronic control units from the vehicle in this case);
- Remember to disconnect the negative battery terminal and all the electronic modules before performing electrical welding operations on the vehicle (injection-ignition control unit, coil power modules, climate control / air conditioning system control unit, etc.);
- Do not apply voltage higher than or different from the vehicle battery voltage, e.g. when jump starting using an auxiliary battery make sure that the voltage is the same and the connection polarity is correct;
- Always ensure the utmost cleanliness during coolant circuit maintenance operations. This is because particles of dirt could obstruct the coolant passage through the expansion valve and cause poor system operation;
- Store receiver-driers in a dry place to ensure long life;
- Regularly check the conditions, alignment and tension of the compressor drive belt. Furthermore, check the compressor oil level;
- Make sure that there are no leaks from the heating or air conditioning system;
- Check that the system is charged with at least 850/900 grams of specified fluid;
- Check that the electrical connections of the various components and the system wiring are in good condition (sensors, climate control unit, compressor, etc.);
- Always make sure that the coolant has been drained and collected in a suitable device before disconnecting any line.

® Automobili Lamborghini S.p.A.
The information and procedures published below are strictly confidential and exclusively for the Lamborghini Dealer Network and Authorized Service Points. All copyrights are property of Automobili Lamborghini S.p.A based on copyright law. All of the PDF chapters in the WEB workshop manuals described below are based on information available at the time of publication. The company reserves the right to make updates and modifications. The following are prohibited: reprinting, reproduction, forwarding to unauthorized people and/or third parties, and translation, including partial, without written authorization from Automobili Lamborghini S.p.A.

The present section contains the following disassembly sequences:

A. air conditioner disassembly
B. air conditioner filter disassembly

A. air conditioner disassembly

Preliminary operations

- Disassemble the silencer safety grid **(025103)**.

Air conditioner disassembly

1. Drain the Freon from the air conditioning system and disconnect the delivery and intake hoses from the compressor.

2. Remove the delivery (**A-Fig.1**) and intake pipe mounting clamps on the water pump and remove the pipes (**B-Fig.1**).

NOTE
Position a container under the vehicle to collect the coolant.

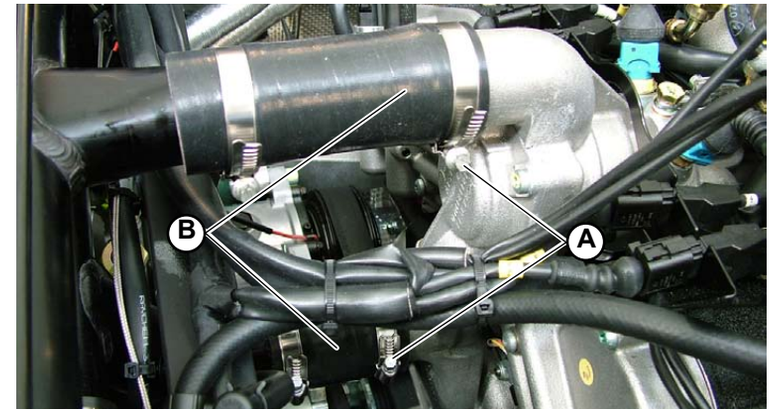

Fig.1

3. Remove the rear cross member, unscrewing the 4 screws (**C-Fig.2**) of the two inner sides.

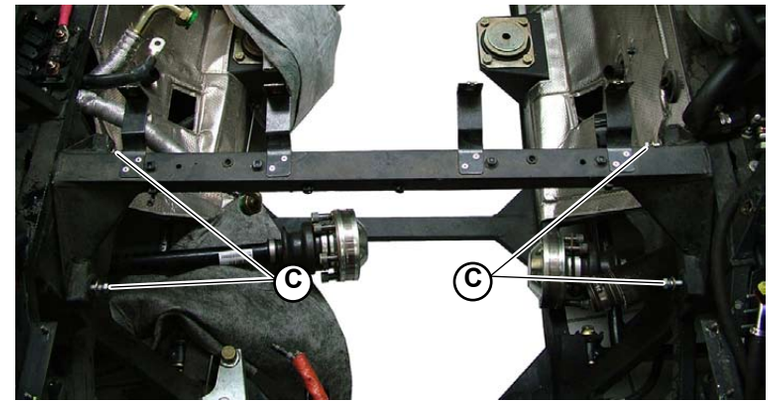

Fig.2

® Automobili Lamborghini S.p.A.
The information and procedures published below are strictly confidential and exclusively for the Lamborghini Dealer Network and Authorized Service Points. All copyrights are property of Automobili Lamborghini S.p.A based on copyright law. All of the PDF chapters in the WEB workshop manuals described below are based on information available at the time of publication. The company reserves the right to make updates and modifications. The following are prohibited: reprinting, reproduction, forwarding to unauthorized people and/or third parties, and translation, including partial, without written authorization from Automobili Lamborghini S.p.A.

4. Remove the auxiliary belt **(010103)**.

5. Remove the three screws (**D-Fig.3**) that secure the heat-proof screen (**E-Fig.3**) to the lower support.

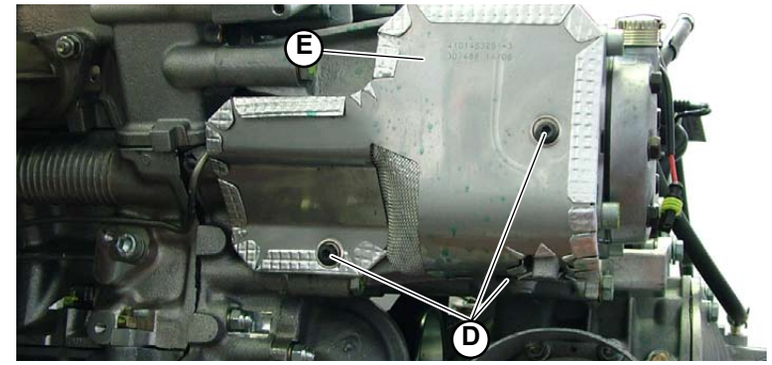

Fig.3

6. Remove the 4 screws (**F-Fig.4**) securing the power steering pump frame, air conditioning system compressor and alternator (**G-Fig.4**); remove the frame without damaging the pipes.

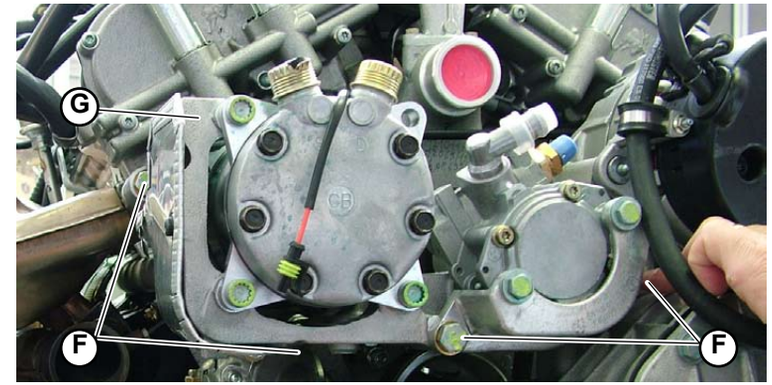

Fig.4

7. Remove the 6 screws (**H-Fig.5**) that secure the compressor (**I-Fig.5**) to the support; then remove the compressor and the pulley.

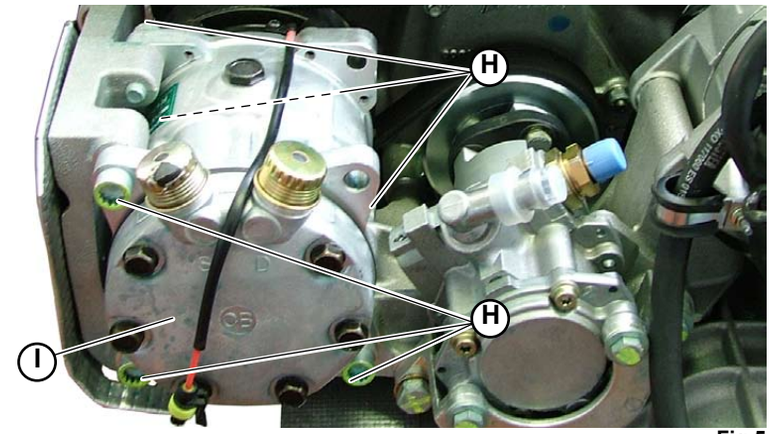

Fig.5

® Automobili Lamborghini S.p.A.
The information and procedures published below are strictly confidential and exclusively for the Lamborghini Dealer Network and Authorized Service Points. All copyrights are property of Automobili Lamborghini S.p.A based on copyright law. All of the PDF chapters in the WEB workshop manuals described below are based on information available at the time of publication. The company reserves the right to make updates and modifications. The following are prohibited: reprinting, reproduction, forwarding to unauthorized people and/or third parties, and translation, including partial, without written authorization from Automobili Lamborghini S.p.A.

B. air conditioner filter disassembly

- Open the front bonnet.
- Manually remove the safety grids (**A-Fig.6**) on either side of the luggage compartment.
- Unscrew the fixing screws (**B-Fig.6**) to access the filters.
- Remove the air conditioner dustproof filters.

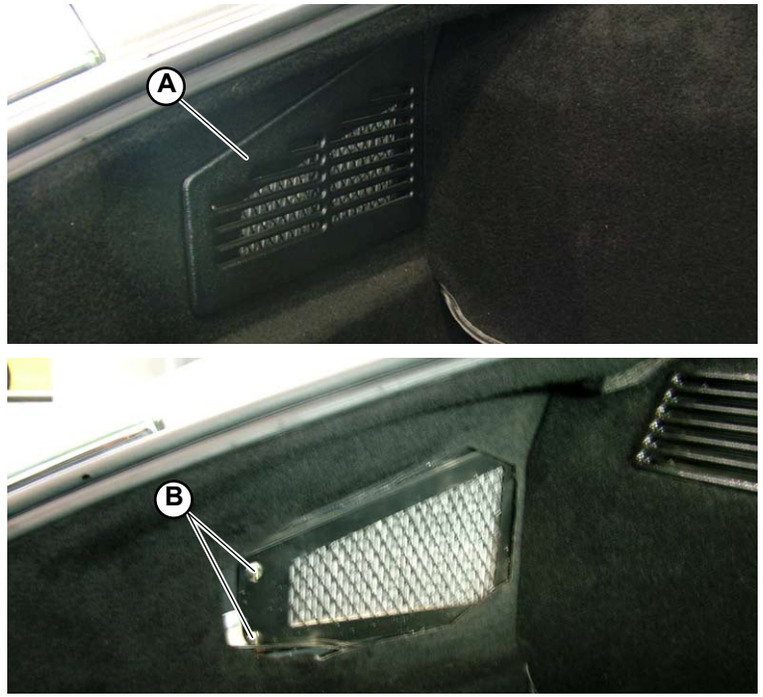

Fig.6

® Automobili Lamborghini S.p.A.
The information and procedures published below are strictly confidential and exclusively for the Lamborghini Dealer Network and Authorized Service Points. All copyrights are property of Automobili Lamborghini S.p.A based on copyright law. All of the PDF chapters in the WEB workshop manuals described below are based on information available at the time of publication. The company reserves the right to make updates and modifications. The following are prohibited: reprinting, reproduction, forwarding to unauthorized people and/or third parties, and translation, including partial, without written authorization from Automobili Lamborghini S.p.A.

The present section contains the following assembly sequences:

A. Air conditioner assembly

B. Air conditioner filter assembly

A. Air conditioner assembly

1. Position the compressor (**A-Fig.1**) and secure it onto the support using the 6 screws (**B-Fig.1**).
Screw attachment: **tightening torque (000800-6c)**.

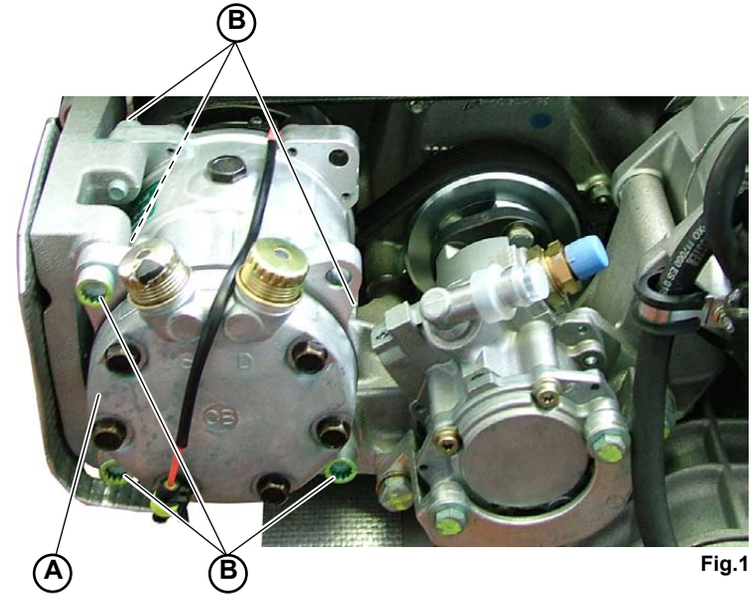

Fig.1

2. Position the power steering pump frame, air condition system compressor and alternator (**C-Fig.2**) and secure it using the 4 screws (**D-Fig.2**), without damaging the pipes.
Screw attachment: **tightening torque (000800-6d)**.

3. Install the auxiliary belt **(010105)**.

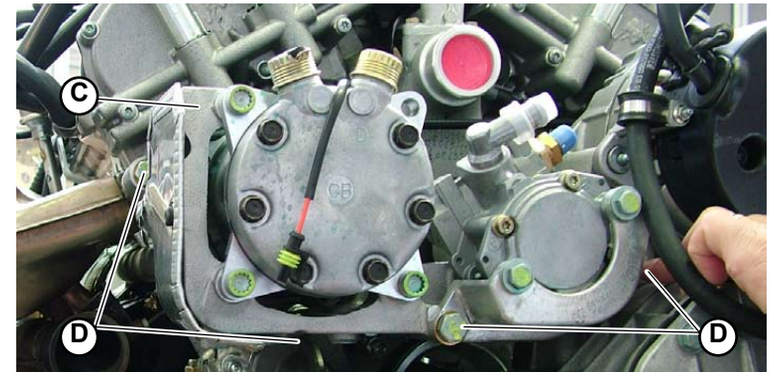

Fig.2

® Automobili Lamborghini S.p.A.
The information and procedures published below are strictly confidential and exclusively for the Lamborghini Dealer Network and Authorized Service Points. All copyrights are property of Automobili Lamborghini S.p.A based on copyright law. All of the PDF chapters in the WEB workshop manuals described below are based on information available at the time of publication. The company reserves the right to make updates and modifications. The following are prohibited: reprinting, reproduction, forwarding to unauthorized people and/or third parties, and translation, including partial, without written authorization from Automobili Lamborghini S.p.A.

4. Secure the heat-proof screen (**E-Fig.3**) to the lower support using the three screws (**F-Fig.3**).

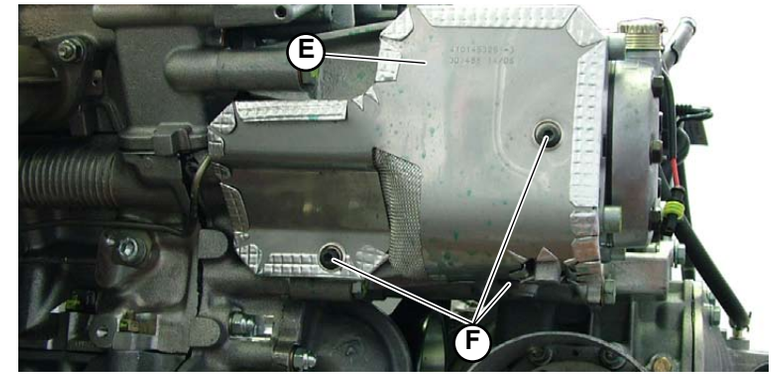

Fig.3

5. Assemble the rear cross member, tightening the 4 screws (**G-Fig.4**) onto the two inner sides.

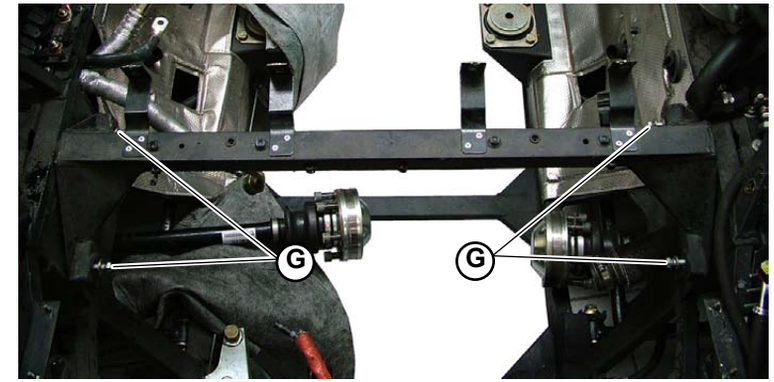

Fig.4

6. Reconnect the water pump delivery and intake pipes (**H-Fig.5**), securing them with the clamps (**I-Fig.5**).

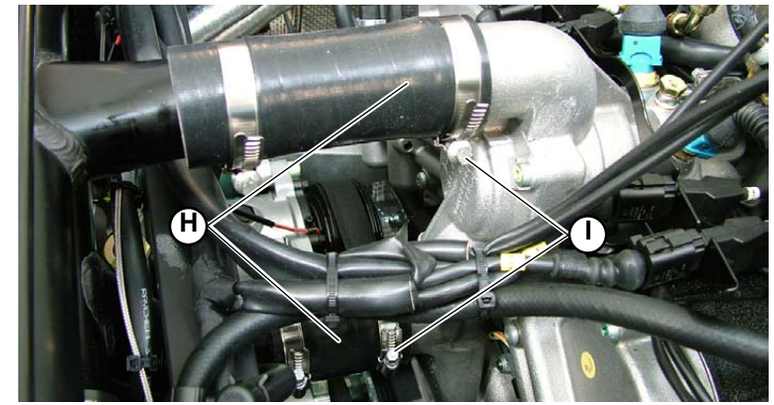

Fig.5

NOTE
Top up the engine coolant **(022107)**.

- Fill the air conditioning system.
- Install the silencer safety grid **(025105)**.

® Automobili Lamborghini S.p.A.
The information and procedures published below are strictly confidential and exclusively for the Lamborghini Dealer Network and Authorized Service Points. All copyrights are property of Automobili Lamborghini S.p.A based on copyright law. All of the PDF chapters in the WEB workshop manuals described below are based on information available at the time of publication. The company reserves the right to make updates and modifications. The following are prohibited: reprinting, reproduction, forwarding to unauthorized people and/or third parties, and translation, including partial, without written authorization from Automobili Lamborghini S.p.A.

B. Air conditioner filter assembly

- Reposition the air conditioner dustproof filters in their housing.
- Tighten the 4 fixing screws (**A-Fig.6**).
- Clip the safety grids (**B-Fig.6**) on either side of the luggage compartment.
- Close the front bonnet.

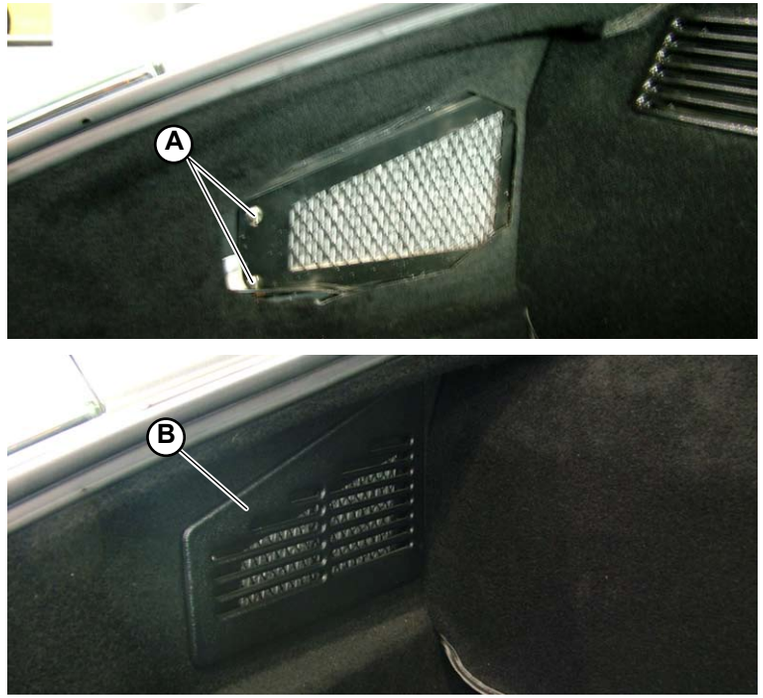

Fig.6

® Automobili Lamborghini S.p.A.
The information and procedures published below are strictly confidential and exclusively for the Lamborghini Dealer Network and Authorized Service Points. All copyrights are property of Automobili Lamborghini S.p.A based on copyright law. All of the PDF chapters in the WEB workshop manuals described below are based on information available at the time of publication. The company reserves the right to make updates and modifications. The following are prohibited: reprinting, reproduction, forwarding to unauthorized people and/or third parties, and translation, including partial, without written authorization from Automobili Lamborghini S.p.A.

Air conditioning system filling

This system employs R134a coolant (tetra-fluoride-ethane) which is classified as an environmental-friendly substance by the legislation in force. Never use this coolant in systems operating with the previous R12 fluid (Freon 12).
For reasons of incompatibility between compressor oil and coolant, R12 cannot be used in systems designed to run on R134a.

Do not dispose of R134a directly into the atmosphere. Despite the fact that the ozone depletion potential of the substance is equal to zero, it does have a potential global warming factor. For this reason, collection and recycling are subject to legal controls.
Always use type-approved coolant collection/recycling devices to capture the coolant drained from the air conditioning system. Do not mix different coolants in the same device

CAUTION!

When servicing air conditioning systems or compressors, always wear protective glasses and gloves.
Carry out these operations in properly ventilated and free of naked flames areas.

Connect the special device for collecting the coolant to the port located on the compressor intake pipe, that can be accessed from the left rear wheel arch compartment.

Drain the system slowly to prevent the formation of ice inside the expansion valve and oil leakage from the compressor.

After draining the system completely, bleed the air from the coolant charging cylinder and system.
A vacuum of approximately 0.5 ÷ 0.6 bars in the system is required according to the device used.
Check system tightness for at least 15 minutes after eliminating all the air from the system.
If the system is not airtight, fill with approximately 500 grams of coolant and locate the leak.

® Automobili Lamborghini S.p.A.
The information and procedures published below are strictly confidential and exclusively for the Lamborghini Dealer Network and Authorized Service Points. All copyrights are property of Automobili Lamborghini S.p.A based on copyright law. All of the PDF chapters in the WEB workshop manuals described below are based on information available at the time of publication. The company reserves the right to make updates and modifications. The following are prohibited: reprinting, reproduction, forwarding to unauthorized people and/or third parties, and translation, including partial, without written authorization from Automobili Lamborghini S.p.A.

STOP **Add a small amount of fluorescent fluid to the coolant to facilitate leak location. The presence of the leak will appear under the light of specific leak locating lamps.**

CAUTION!

Do not use naked flames to locate leaks. A particularly hazardous gas (phosgene) could be formed.

The system draining and refilling operations must be carried out with the special device connected to the points shown in the figures (**Fig.1** - Low pressure circuit valve) (**Fig.2** - High pressure circuit valve).

After checking system tightness, refill it with 850/900 grams of the prescribed coolant To refill the system, start the engine up, select the lowest temperature on the control panel and make sure the climate control system control unit causes the compressor electromagnetic clutch to engage.
When the system is filled up, let it run for approx. 10-15 mins and check that the coolant flowing through the receiver-drier is in liquid state.

To check oil level inside the compressor, place it in horizontal position and, after removing the plug, make sure oil level matches the filling hole. Top up with the prescribed oil, if necessary.

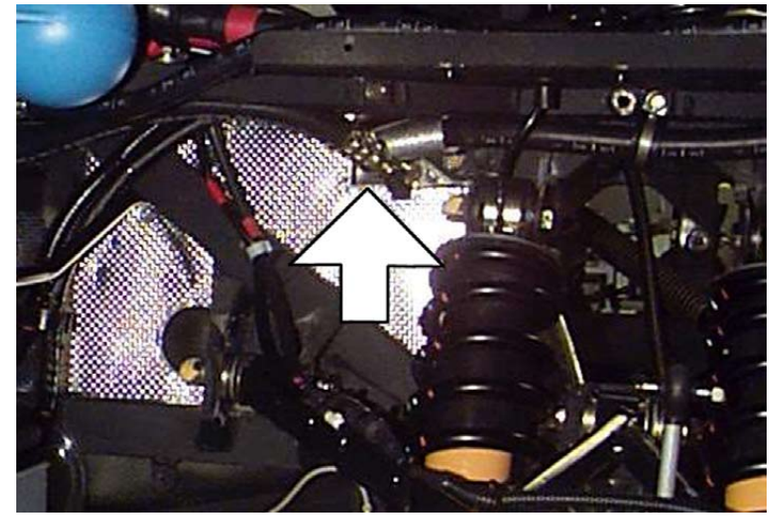

Fig.1

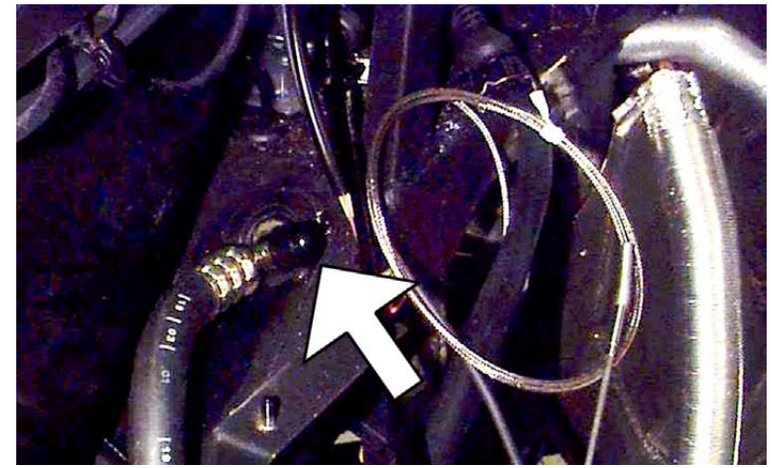

Fig.2

® Automobili Lamborghini S.p.A.
The information and procedures published below are strictly confidential and exclusively for the Lamborghini Dealer Network and Authorized Service Points. All copyrights are property of Automobili Lamborghini S.p.A based on copyright law. All of the PDF chapters in the WEB workshop manuals described below are based on information available at the time of publication. The company reserves the right to make updates and modifications. The following are prohibited: reprinting, reproduction, forwarding to unauthorized people and/or third parties, and translation, including partial, without written authorization from Automobili Lamborghini S.p.A.

The climate control system control unit will run a procedure to identify the system where it is fitted the first time it is switched on.
For this reason, the RESET procedure must be run whenever a control unit is connected to a different system from where it was first used.
To run the RESET procedure, turn the ignition switch to ON and press the AUTO button simultaneously.
Letter I will firstly appear along with the basic control symbol followed by letter B during the procedure.
At the end of the procedure, the control unit will switch to automatic operation. The temperature will be set to 23 °C.
The system will be ready to work from this point.

The control unit RESET procedure is required only if the control unit is replaced.

® Automobili Lamborghini S.p.A.
The information and procedures published below are strictly confidential and exclusively for the Lamborghini Dealer Network and Authorized Service Points. All copyrights are property of Automobili Lamborghini S.p.A based on copyright law. All of the PDF chapters in the WEB workshop manuals described below are based on information available at the time of publication. The company reserves the right to make updates and modifications. The following are prohibited: reprinting, reproduction, forwarding to unauthorized people and/or third parties, and translation, including partial, without written authorization from Automobili Lamborghini S.p.A.

Malfunctions diagnosis for “Insufficient cooling”

Below is a list of the most probable causes of defects, referring to the pressure read by the LOW or HIGH pressure gauge, which reveals the value that has changed the most.

The following “Probable causes” were listed in the order of the defect statistically most likely to occur.
(**V**) For variable displacement compressors only;
(**F**) For fixed displacement compressors only;

Probable causes

Fig.1

- Intake and exhaust pipes inverted on the compressor;
- The compressor’s electric clutch slips or does not completely engage;
- Expansion valve is stuck open. If the compressor has variable displacement, small but quick changes in pressure occur in the low pressure side;
- (**V**) The compressor’s displacement control valve is poorly calibrated or defective;
- Compressor damaged.

Fig.2

- (**F**) Thermostat defective;
- (**F**) Expansion valve stuck closed or obstructed;
- Filter waterlogged;
- (**V**) The compressor’s displacement control valve is stuck at maximum displacement;
- (**F**) Obstruction in the low pressure side or the high pressure side between the filter and evaporator;

Fig.3

- Hot air penetrating into the evaporation unit or passenger compartment;
- Hot water seeping into the heater;
- Ice forming on the evaporating coil.

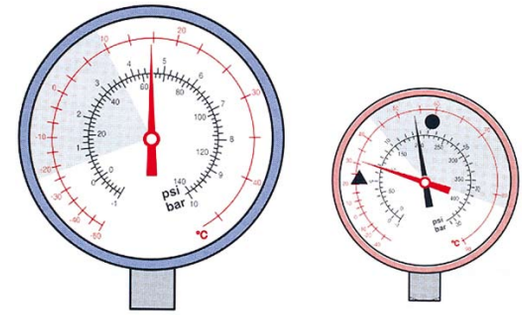

B.P. alta **A.P.** normale (●) o bassa (▲) **Fig.1**

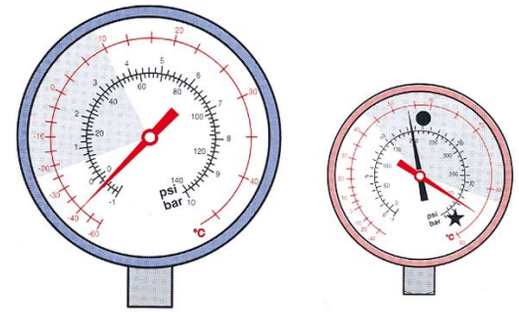

B.P. bassa **A.P.** alta (★) o normale (●) **Fig.2**

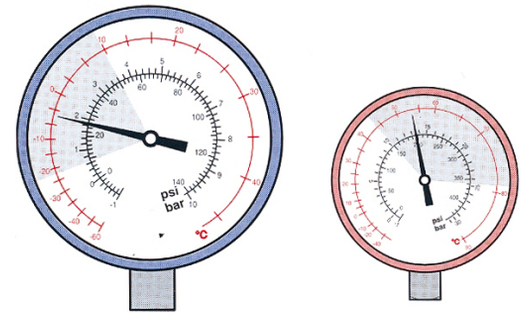

B.P. normale **A.P. normale** **Fig.3**

Gray area (high pressure and low pressure area with outside temperature between 15.5 and 43°C)

® Automobili Lamborghini S.p.A.
The information and procedures published below are strictly confidential and exclusively for the Lamborghini Dealer Network and Authorized Service Points. All copyrights are property of Automobili Lamborghini S.p.A based on copyright law. All of the PDF chapters in the WEB workshop manuals described below are based on information available at the time of publication. The company reserves the right to make updates and modifications. The following are prohibited: reprinting, reproduction, forwarding to unauthorized people and/or third parties, and translation, including partial, without written authorization from Automobili Lamborghini S.p.A.

Fig.4

- Normal situation with very high ambient temperature (>43°C);
- Too much coolant, 30-35% extra;
- Condenser overheating;
- Air inside the A/C system;
- (**V**) The compressor's displacement control valve is defective;
- Obstruction in the high pressure side between compressor and condenser pipe-filter but after the point where the high pressure is read.

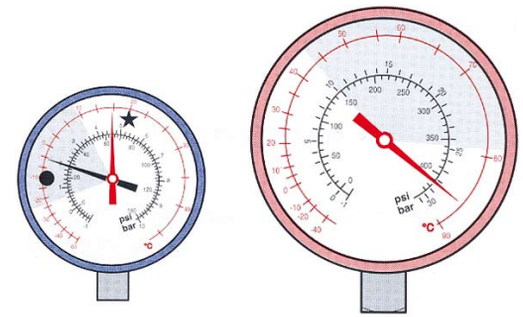

B.P. alta (★) o normale (●) **A.P. alta**

Fig.4

Fig.5

- Normal situation with very low ambient temperature (>5°C);
- Too little coolant, 70-75% deficiency. Check for coolant leaks;
- (**V**) Expansion valve stuck closed or obstructed;
- (**V**) Obstruction in the low pressure side or the high pressure side between the filter and evaporator;
- Obstruction in the high pressure side between compressor and condenser pipe-filter but after the point where the high pressure is read.
- Compressor damaged.

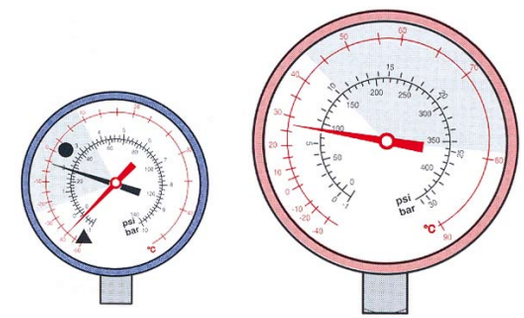

B.P. normale (●) o bassa (▲) **A.P. bassa**

Fig.5

Fig.6

- Compressor belt failure. Probable cause: pulleys not aligned;
- The compressor's electric clutch slips or does not engage;
- Compressor damaged;
- (**V**) The compressor's displacement control valve is defective.

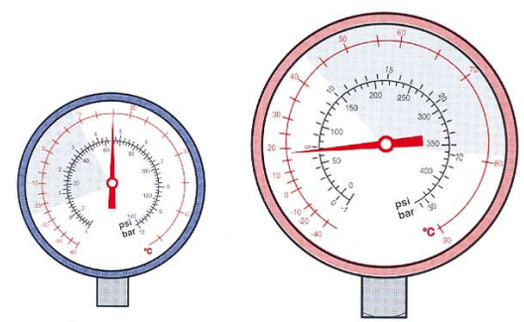

B.P. circa uguale a A.P.

Fig.6

® Automobili Lamborghini S.p.A.
The information and procedures published below are strictly confidential and exclusively for the Lamborghini Dealer Network and Authorized Service Points. All copyrights are property of Automobili Lamborghini S.p.A based on copyright law. All of the PDF chapters in the WEB workshop manuals described below are based on information available at the time of publication. The company reserves the right to make updates and modifications. The following are prohibited: reprinting, reproduction, forwarding to unauthorized people and/or third parties, and translation, including partial, without written authorization from Automobili Lamborghini S.p.A.

Transmission housing

CAUTION

- All operations must be carried out with the utmost care to avoid injury to people.
- Specific tools are required for certain procedures. The use of these tools is essential to ensure safe operation.
- Follow the safety rules in force in the workshop. Specific warnings are provided in the Manual where specific precautions are required to prevent hazardous situations.
- When employing chemical products scrupulously follow the instructions shown on the safety data sheet that the supplier is required to hand over to the user.

WARNING

- All operations must be carried out with the utmost care to avoid damage to components.
- Loosen tight-fitting ferrous parts by tapping with an aluminium or lead hammer and loosen tight-fitting light alloy parts by tapping with a resin or a wooden hammer.
- Check during the disassembly that the elements have the correct reference marks as required.
- During the reassembly lubricate the required parts to prevent seizing during initial operation.
- During the reassembly respect the tightening torques and the adjustment data.
- Replace gaskets, seals, snap rings, safety plates, self-locking nuts, caulked edge nuts and all other deteriorated parts during each reassembly.
- During the reassembly use Locktite/Arexons 518 sealant.
- During the reassembly use Locktite/Arexons 52A42 medium strength thread sealant where recommended.

® Automobili Lamborghini S.p.A.
The information and procedures published below are strictly confidential and exclusively for the Lamborghini Dealer Network and Authorized Service Points. All copyrights are property of Automobili Lamborghini S.p.A based on copyright law. All of the PDF chapters in the WEB workshop manuals described below are based on information available at the time of publication. The company reserves the right to make updates and modifications. The following are prohibited: reprinting, reproduction, forwarding to unauthorized people and/or third parties, and translation, including partial, without written authorization from Automobili Lamborghini S.p.A.

The gearbox is placed in the engine facing toward the passenger compartment.

The countershaft drives:

- the front differential directly, by means of a propeller shaft
- the rear differential, by means of a transmission gear couple and of a propeller shaft by the crankcase side.

It has six synchronized ratios and reverse gear, without direct drive.

Gearbox lubrication is ensured by a gear pump geared on the main shaft.

A.	Engine
B.	Clutch
C.	Gearbox
D.	Front differential
E.	Front propeller shaft
F.	Rear propeller shaft
G.	Rear differential

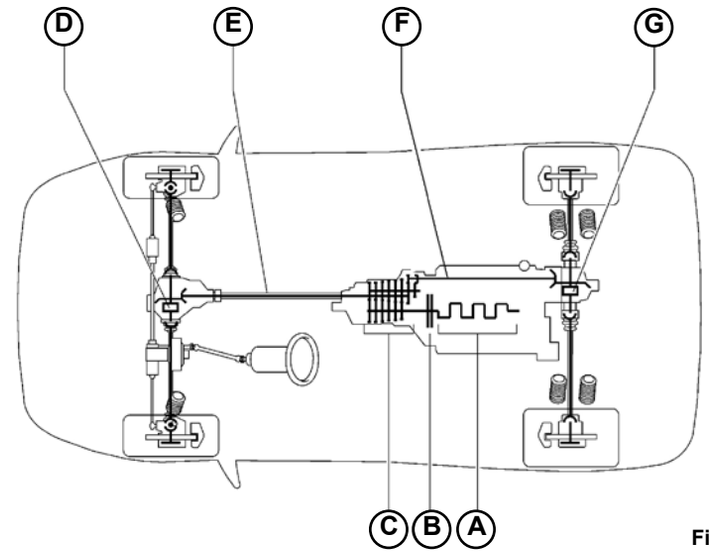

Fig.1

® Automobili Lamborghini S.p.A.
The information and procedures published below are strictly confidential and exclusively for the Lamborghini Dealer Network and Authorized Service Points. All copyrights are property of Automobili Lamborghini S.p.A based on copyright law. All of the PDF chapters in the WEB workshop manuals described below are based on information available at the time of publication. The company reserves the right to make updates and modifications. The following are prohibited: reprinting, reproduction, forwarding to unauthorized people and/or third parties, and translation, including partial, without written authorization from Automobili Lamborghini S.p.A.

Functional blocks

From a functional perspective, the gearbox assembly, once removed from the engine, can be disassembled in the following blocks:

Manual gearbox (Fig.2)	
A.	Clutch housing and transmission gears to rear differential
B.	Gearbox
C.	Gearbox lubrication pump
D.	Propeller shaft pipe to front differential
E.	Gear shift lever device
F.	Shift lever device support

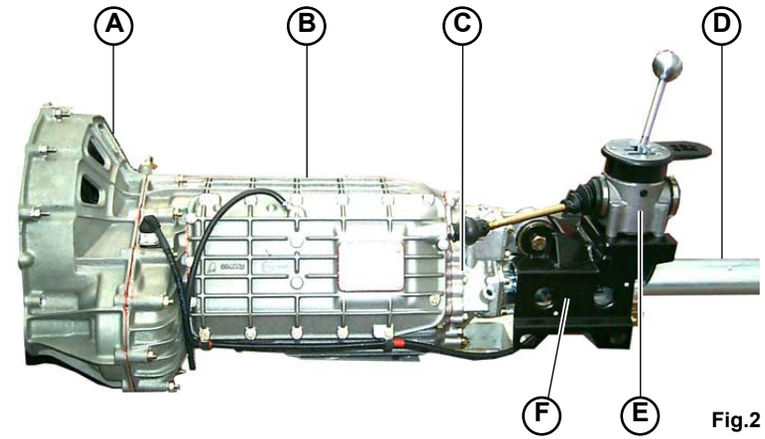

Fig.2

E-gear (Fig.3)	
A.	Clutch housing and transmission gears to rear differential
B.	Gearbox
C.	Gearbox lubrication pump
D.	Propeller shaft pipe to front differential
E.	Actuator
F.	Actuator support

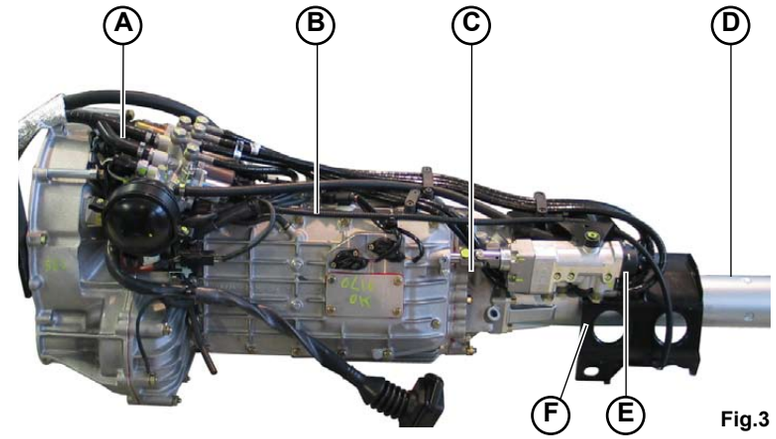

Fig.3

® Automobili Lamborghini S.p.A.
The information and procedures published below are strictly confidential and exclusively for the Lamborghini Dealer Network and Authorized Service Points. All copyrights are property of Automobili Lamborghini S.p.A based on copyright law. All of the PDF chapters in the WEB workshop manuals described below are based on information available at the time of publication. The company reserves the right to make updates and modifications. The following are prohibited: reprinting, reproduction, forwarding to unauthorized people and/or third parties, and translation, including partial, without written authorization from Automobili Lamborghini S.p.A.

Transmission to rear propeller shaft

A.	Transmission driven gear to rear propeller shaft
B.	Bearing
C.	Countershaft
D.	Driving gear
E.	Main shaft
F.	Clutch housing
G.	Clutch assembly
H.	Countershaft ring nut
I.	Countershaft roller bearing
L.	Oil seal
M.	Ball bearing

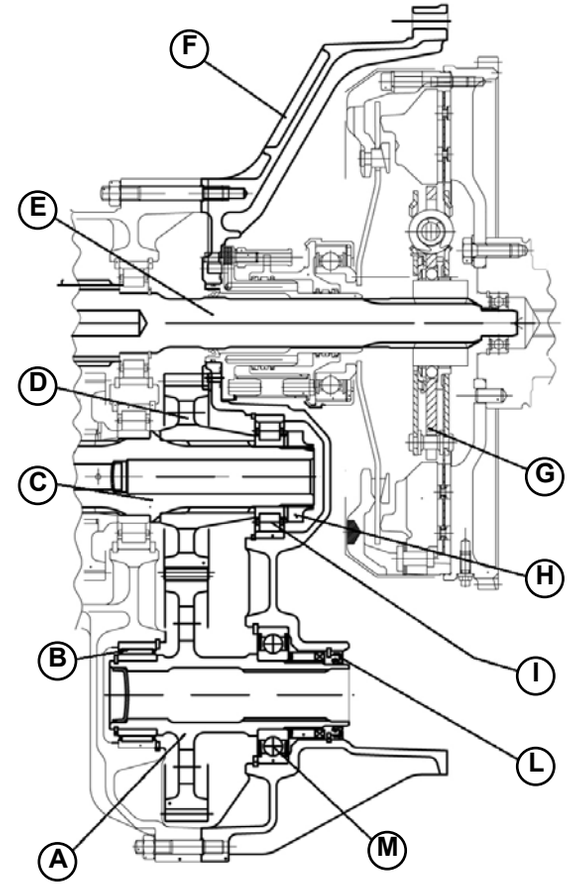

Fig.4

® Automobili Lamborghini S.p.A.
The information and procedures published below are strictly confidential and exclusively for the Lamborghini Dealer Network and Authorized Service Points. All copyrights are property of Automobili Lamborghini S.p.A based on copyright law. All of the PDF chapters in the WEB workshop manuals described below are based on information available at the time of publication. The company reserves the right to make updates and modifications. The following are prohibited: reprinting, reproduction, forwarding to unauthorized people and/or third parties, and translation, including partial, without written authorization from Automobili Lamborghini S.p.A.

Gearbox

1.	Snap ring	**17.**	Main shaft bearing
2.	Countershaft bearing	**18.**	Main shaft
3.	Countershaft ring nut	**19.**	Countershaft
4.	Main shaft ring nut	**20.**	Countershaft bearing
5.	Oil pump pin	**21.**	Reverse gear driven gear
6.	Main shaft bearing	**22.**	Reverse gear synchronizer
7.	6th gear driving gear	**23.**	1st gear driven gear
8.	5th/6th gear synchronizer	**24.**	1st/2nd gear synchronizer
9.	5th gear driving gear	**25.**	Oil plug
10.	4th gear driving gear	**26.**	2nd gear driven gear
11.	3rd gear driving gear	**27.**	Countershaft bearing
12.	Main shaft bearing	**28.**	3rd gear driven gear
13.	2nd gear driving gear	**29.**	3rd/4th gear synchronizer
14.	1st gear driving gear	**30.**	4th gear driven gear
15.	Reverse gear driving gear	**31.**	5th gear driven gear
16.	Gearbox	**32.**	6th gear driven gear

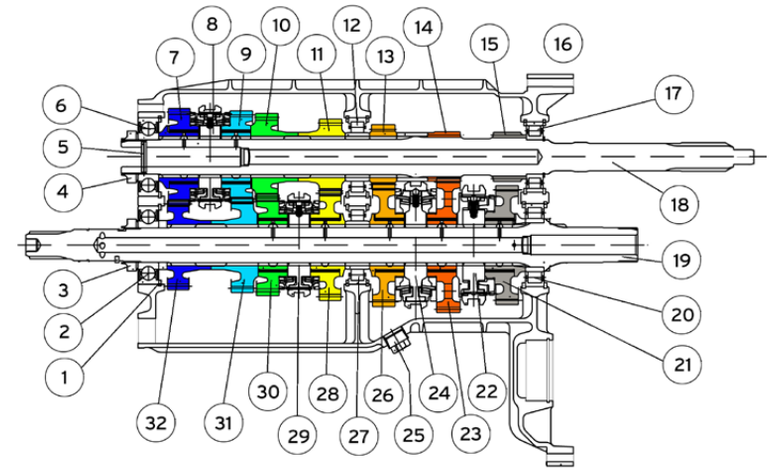

Fig.5

® Automobili Lamborghini S.p.A.
The information and procedures published below are strictly confidential and exclusively for the Lamborghini Dealer Network and Authorized Service Points. All copyrights are property of Automobili Lamborghini S.p.A based on copyright law. All of the PDF chapters in the WEB workshop manuals described below are based on information available at the time of publication. The company reserves the right to make updates and modifications. The following are prohibited: reprinting, reproduction, forwarding to unauthorized people and/or third parties, and translation, including partial, without written authorization from Automobili Lamborghini S.p.A.

Oil pump, shift lever device, shift lever device support and front propeller shaft

A.	Front propeller shaft
B.	Pipe
C.	Shift lever device support
D.	Shift lever device
E.	Shift lever plate (in passenger compartment)
F.	Shift lever knob
G.	Gear shift control shaft
H.	Gearbox front bracket silentblock
I.	Bracket mount to gearbox pump
L.	Gearbox pump body
M.	Pump mount to gearbox
N.	Pump driving gear with drive coupling
O.	Main shaft
P.	Main shaft pin
Q.	Pump driven gear
R.	Gearbox oil timing bush
S.	Countershaft
T.	Oil intake filter from gearbox
U.	Countershaft output oil seal
V.	Front propeller shaft pipe mounts to pump

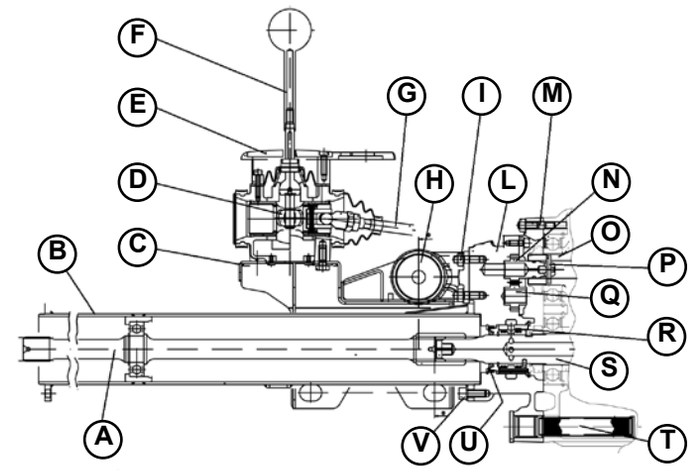

Fig.6

® Automobili Lamborghini S.p.A.
The information and procedures published below are strictly confidential and exclusively for the Lamborghini Dealer Network and Authorized Service Points. All copyrights are property of Automobili Lamborghini S.p.A based on copyright law. All of the PDF chapters in the WEB workshop manuals described below are based on information available at the time of publication. The company reserves the right to make updates and modifications. The following are prohibited: reprinting, reproduction, forwarding to unauthorized people and/or third parties, and translation, including partial, without written authorization from Automobili Lamborghini S.p.A.

Gear shift forks

A.	Cover
B.	Control tooth
C.	Reverse gear control rod and tooth
D.	Reverse gear control fork
E.	1st/2nd gear shift rod and tooth
F.	1st/2nd gear shift fork
G.	3rd/4th gear shift rod and tooth
H.	3rd/4th gear shift fork
I.	5th/6th gear shift rod and tooth
L.	5th/6th gear shift fork

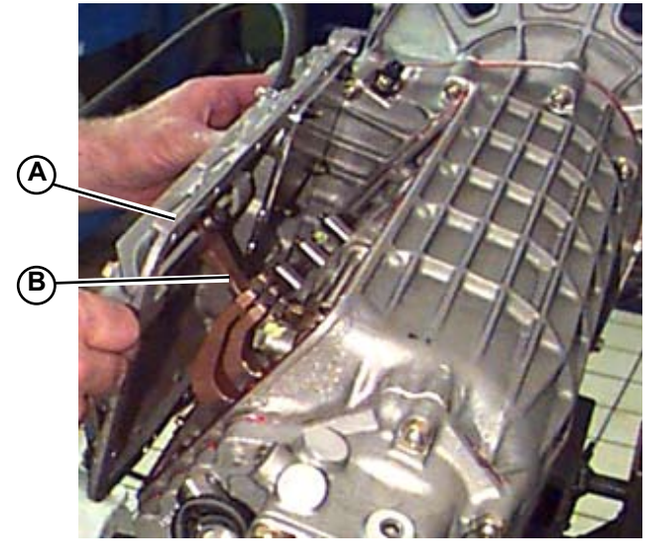

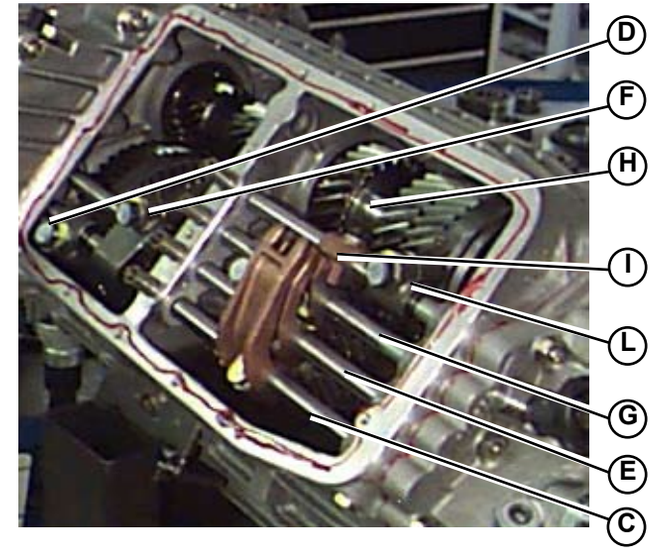

Fig.7

General characteristics

Gear ratios	**000500 / 000600**

® Automobili Lamborghini S.p.A.
The information and procedures published below are strictly confidential and exclusively for the Lamborghini Dealer Network and Authorized Service Points. All copyrights are property of Automobili Lamborghini S.p.A based on copyright law. All of the PDF chapters in the WEB workshop manuals described below are based on information available at the time of publication. The company reserves the right to make updates and modifications. The following are prohibited: reprinting, reproduction, forwarding to unauthorized people and/or third parties, and translation, including partial, without written authorization from Automobili Lamborghini S.p.A.

Transmission housing disassembly

WARNING

- All operations must be carried out with the utmost care to avoid injury to people.
- Specific tools are required for certain procedures. The use of these tools is essential to ensure safe operation.
- Follow the safety rules in force in the workshop. Specific warnings are provided in the Manual where specific precautions are required to prevent hazardous situations.
- When employing chemical products scrupulously follow the instructions shown on the safety data sheet that the supplier is required to hand over to the user.

CAUTION

- All operations must be carried out with the utmost care to avoid damage to components.
- Loosen tight-fitting ferrous parts by tapping with an aluminum or lead hammer and loosen tight-fitting light alloy parts by tapping with a resin or a wooden hammer.
- During disassemble, check that the elements have the correct reference marks as required.

® Automobili Lamborghini S.p.A.
The information and procedures published below are strictly confidential and exclusively for the Lamborghini Dealer Network and Authorized Service Points. All copyrights are property of Automobili Lamborghini S.p.A based on copyright law. All of the PDF chapters in the WEB workshop manuals described below are based on information available at the time of publication. The company reserves the right to make updates and modifications. The following are prohibited: reprinting, reproduction, forwarding to unauthorized people and/or third parties, and translation, including partial, without written authorization from Automobili Lamborghini S.p.A.

STOP The following procedures can only be completely carried out after removing the power train assembly (010003) from the vehicle.

1. Remove the mounting screws between clutch housing and crankcase.

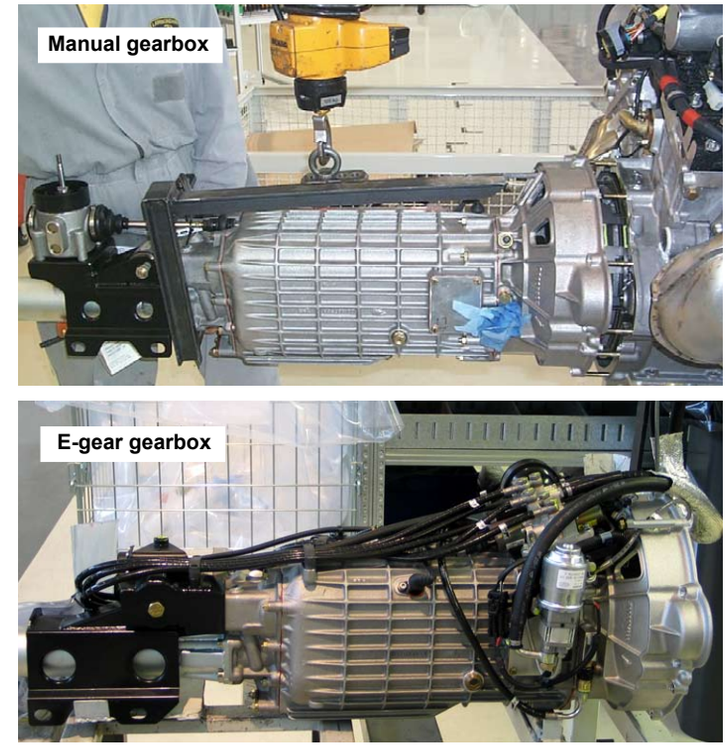

Fig.1

2. Separate the gearbox from the engine and set the assembly on a stand with suitable clamping brackets.

CAUTION

Use suitable tools for handling the assembly. Make sure that the assembly is correctly fastened to the stand and stable to prevent it from tipping over or falling.

3. Immediately install the shift lever device mounting bracket (**A-Fig.2**) on the propeller shaft pipe P/N 62495071 to lock the shift lever device and the shift lever into position and not to adjust the shift lever device itself;

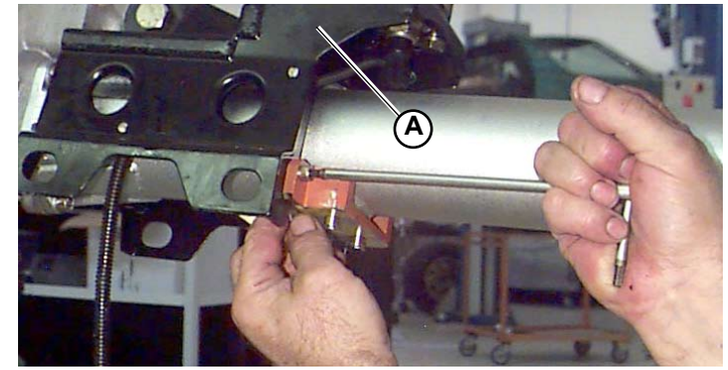

Fig.2

® Automobili Lamborghini S.p.A.
The information and procedures published below are strictly confidential and exclusively for the Lamborghini Dealer Network and Authorized Service Points. All copyrights are property of Automobili Lamborghini S.p.A based on copyright law. All of the PDF chapters in the WEB workshop manuals described below are based on information available at the time of publication. The company reserves the right to make updates and modifications. The following are prohibited: reprinting, reproduction, forwarding to unauthorized people and/or third parties, and translation, including partial, without written authorization from Automobili Lamborghini S.p.A.

CAUTION

Use suitable tools for handling the assembly.
Make sure that the assembly is correctly fastened and stable to prevent it from tipping over or falling.

STOP **The assembly can be fastened to a bracket using the shift mounting holes to the engine.**

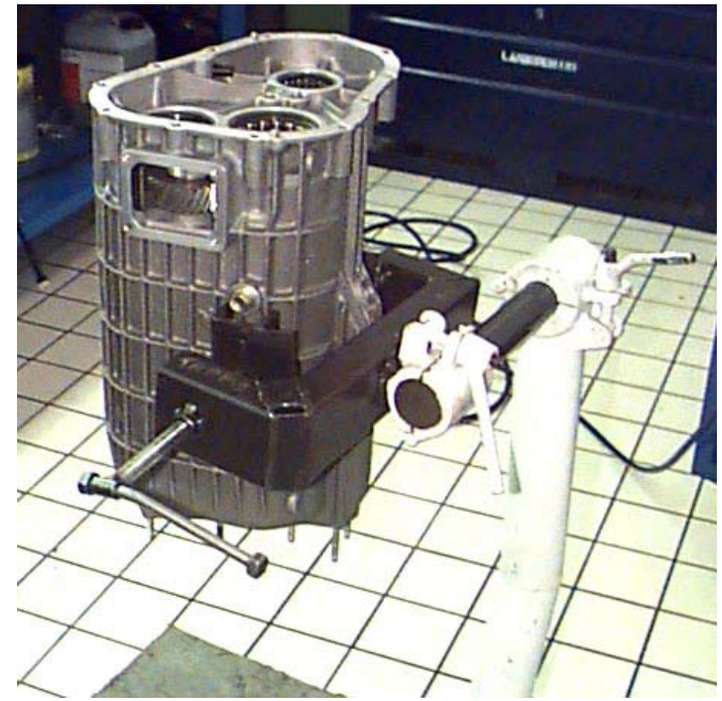

Fig.3

® Automobili Lamborghini S.p.A.
The information and procedures published below are strictly confidential and exclusively for the Lamborghini Dealer Network and Authorized Service Points. All copyrights are property of Automobili Lamborghini S.p.A based on copyright law. All of the PDF chapters in the WEB workshop manuals described below are based on information available at the time of publication. The company reserves the right to make updates and modifications. The following are prohibited: reprinting, reproduction, forwarding to unauthorized people and/or third parties, and translation, including partial, without written authorization from Automobili Lamborghini S.p.A.

4. Make the joint guard slide on the gearbox control rod and remove the cover shift control rod mounting pin from the shift lever device one by means of a small punch (**A-Fig.4**) ***(Manual gearbox)***; Unscrew the screw using a 13 mm wrench ***(e-gear)***.

5. Remove the cover mounting screws to the gearbox (**B-Fig.4**).

6. Remove the gearbox cover by pulling the shift control tooth from the gearbox rod teeth.

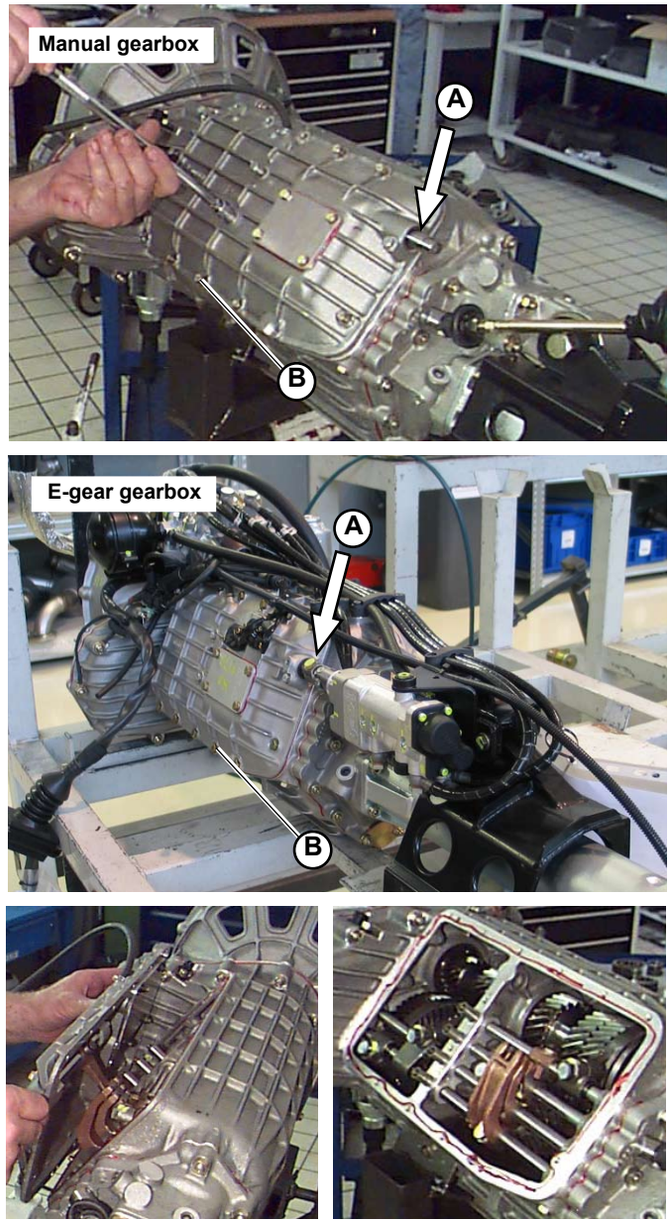

Fig.4

® Automobili Lamborghini S.p.A.
The information and procedures published below are strictly confidential and exclusively for the Lamborghini Dealer Network and Authorized Service Points. All copyrights are property of Automobili Lamborghini S.p.A based on copyright law. All of the PDF chapters in the WEB workshop manuals described below are based on information available at the time of publication. The company reserves the right to make updates and modifications. The following are prohibited: reprinting, reproduction, forwarding to unauthorized people and/or third parties, and translation, including partial, without written authorization from Automobili Lamborghini S.p.A.

7. Remove the reverse gear gearcase side cap (**C-Fig.5**) to reach one of the clutch housing nuts.

8. Position the gearbox with the clutch cover facing upwards.

9. Unscrew the clutch housing nuts and, by means of a rubber hammer, loosen the clutch housing from the gearbox and remove it.

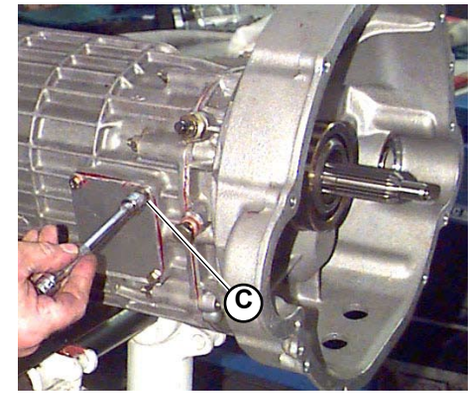

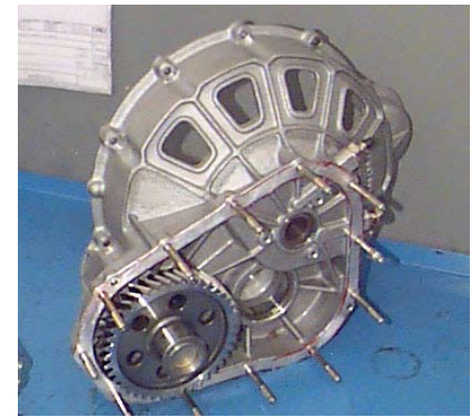

Fig.5

® Automobili Lamborghini S.p.A.
The information and procedures published below are strictly confidential and exclusively for the Lamborghini Dealer Network and Authorized Service Points. All copyrights are property of Automobili Lamborghini S.p.A based on copyright law. All of the PDF chapters in the WEB workshop manuals described below are based on information available at the time of publication. The company reserves the right to make updates and modifications. The following are prohibited: reprinting, reproduction, forwarding to unauthorized people and/or third parties, and translation, including partial, without written authorization from Automobili Lamborghini S.p.A.

Transmission housing assembly

WARNING

- All operations must be carried out with the utmost care to avoid injury to people.
- Specific tools are required for certain procedures. The use of these tools is essential to ensure safe operation.
- Follow the safety rules in force in the workshop. Specific warnings are provided in the Manual where specific precautions are required to prevent hazardous situations.
- When employing chemical products scrupulously follow the instructions shown on the safety data sheet that the supplier is required to hand over to the user.

CAUTION

- All operations must be carried out with the utmost care to avoid damage to components.
- During reassemble lubricate the required parts to prevent seizing during initial operation.
- During reassemble respect the tightening torques and the adjustment data.
- Replace gaskets, seals, snap rings, safety plates, self-locking nuts, caulked edge nuts and all other deteriorated parts during reassemble.
- During the reassemble use Locktite/Arexons 518 sealant.
- During the reassemble use Locktite/Arexons 52A42 medium thread stop where indicated.

® Automobili Lamborghini S.p.A.
The information and procedures published below are strictly confidential and exclusively for the Lamborghini Dealer Network and Authorized Service Points. All copyrights are property of Automobili Lamborghini S.p.A based on copyright law. All of the PDF chapters in the WEB workshop manuals described below are based on information available at the time of publication. The company reserves the right to make updates and modifications. The following are prohibited: reprinting, reproduction, forwarding to unauthorized people and/or third parties, and translation, including partial, without written authorization from Automobili Lamborghini S.p.A.

During reassemble operation, follow the removal procedure in reverse order, and in particular:

1. Install the gearbox-clutch housing assembly to the engine and tighten the mounting screws

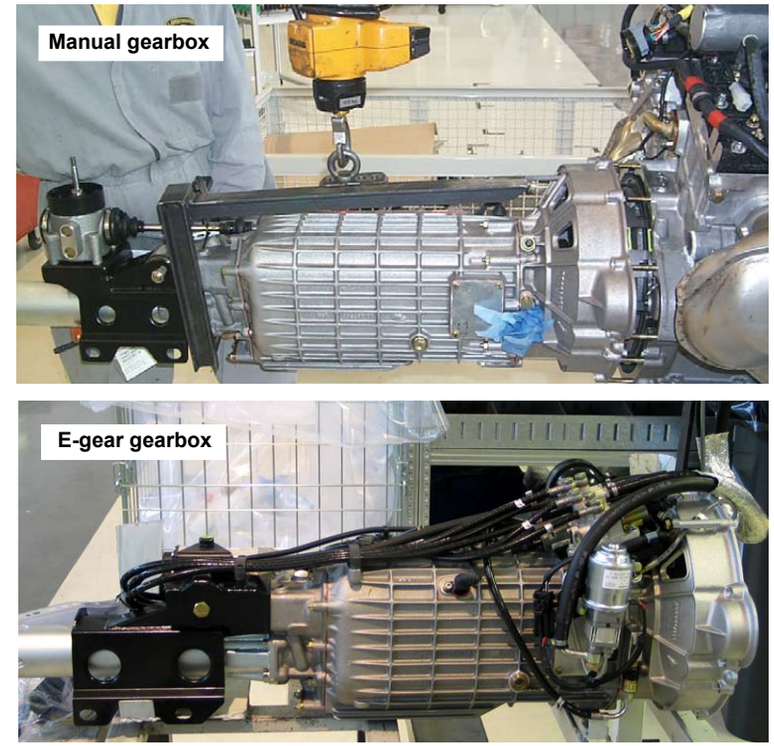

Fig.1

® Automobili Lamborghini S.p.A.
The information and procedures published below are strictly confidential and exclusively for the Lamborghini Dealer Network and Authorized Service Points. All copyrights are property of Automobili Lamborghini S.p.A based on copyright law. All of the PDF chapters in the WEB workshop manuals described below are based on information available at the time of publication. The company reserves the right to make updates and modifications. The following are prohibited: reprinting, reproduction, forwarding to unauthorized people and/or third parties, and translation, including partial, without written authorization from Automobili Lamborghini S.p.A.

1. Clean and degrease thoroughly the contact surfaces between the clutch housing and the gearbox.
2. Apply Locktite 518 on the contact surfaces between the clutch housing and the gearbox.

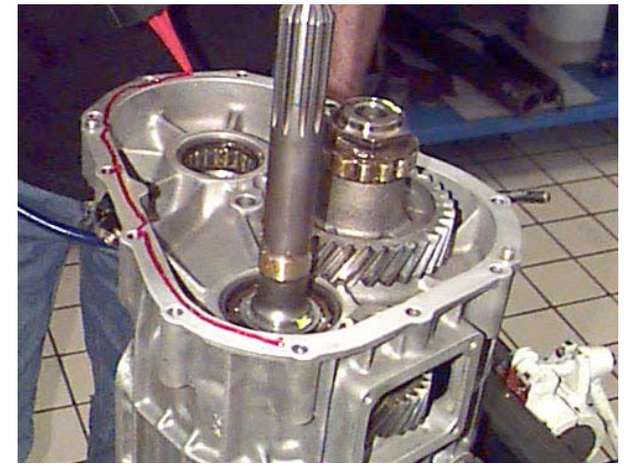

Fig.2

3. Introduce the clutch housing on the gearbox stud bolts paying attention that the countershaft transmission gear bearing rollers do not come out of their seats.
4. Tap the clutch housing with a rubber hammer to fit it into place; introduce the mounting nuts with corrugated washers and tighten to the prescribed torque:
Clutch housing mounting nuts; **tightening torque(000800-3d)**
Clutch housing screws; **tightening torque(000800-3d)**

Fig.3

® Automobili Lamborghini S.p.A.
The information and procedures published below are strictly confidential and exclusively for the Lamborghini Dealer Network and Authorized Service Points. All copyrights are property of Automobili Lamborghini S.p.A based on copyright law. All of the PDF chapters in the WEB workshop manuals described below are based on information available at the time of publication. The company reserves the right to make updates and modifications. The following are prohibited: reprinting, reproduction, forwarding to unauthorized people and/or third parties, and translation, including partial, without written authorization from Automobili Lamborghini S.p.A.

5. Clean and degrease thoroughly the contact surfaces between the cover and the gearbox.

6. Apply red paste to the cover and to the bearing surface on the gearbox.

7. Position the cover, fasten it by means of the screws (**A-Fig.4**) and tighten to the prescribed torque:
Cover mounting screws: **tightening torque (000800-4c)**

8. Install the cover shift control rod mounting pin to the shift lever device pin (Manual gearbox)
Tighten the mounting screw with Loctite medium-strength thread sealant (e-gear).

9. Grease the joint and position the guard.

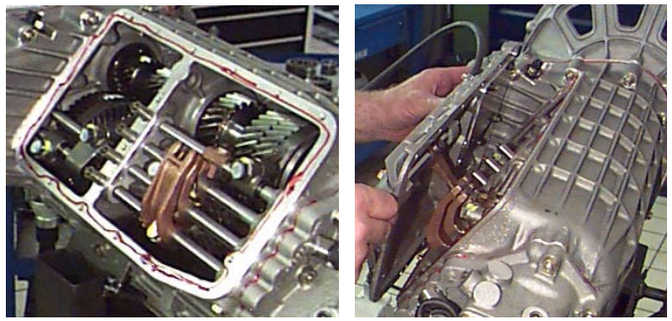

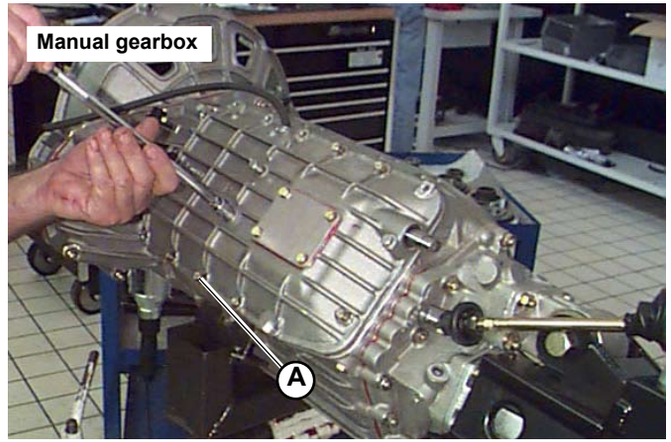

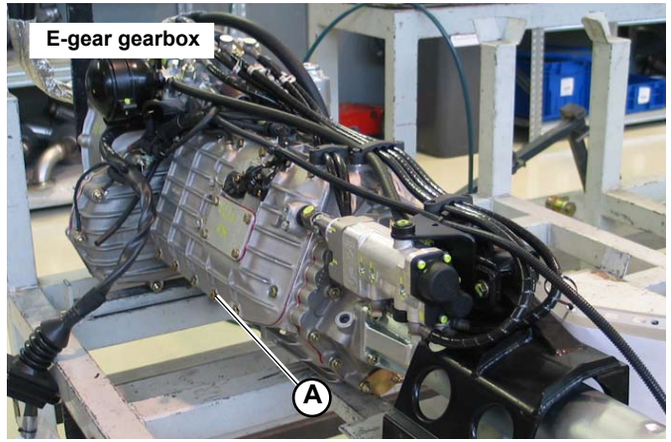

Fig.4

® Automobili Lamborghini S.p.A.
The information and procedures published below are strictly confidential and exclusively for the Lamborghini Dealer Network and Authorized Service Points. All copyrights are property of Automobili Lamborghini S.p.A based on copyright law. All of the PDF chapters in the WEB workshop manuals described below are based on information available at the time of publication. The company reserves the right to make updates and modifications. The following are prohibited: reprinting, reproduction, forwarding to unauthorized people and/or third parties, and translation, including partial, without written authorization from Automobili Lamborghini S.p.A.

Gearbox oil substitution

Preliminary operations

- Lift the vehicle on the car lift **(000000)**.

1. Remove the drain plug (**A-Fig.1**) and allow the gearbox oil to drain out; clean the plug and then tighten it.

Fig.1

® Automobili Lamborghini S.p.A.
The information and procedures published below are strictly confidential and exclusively for the Lamborghini Dealer Network and Authorized Service Points. All copyrights are property of Automobili Lamborghini S.p.A based on copyright law. All of the PDF chapters in the WEB workshop manuals described below are based on information available at the time of publication. The company reserves the right to make updates and modifications. The following are prohibited: reprinting, reproduction, forwarding to unauthorized people and/or third parties, and translation, including partial, without written authorization from Automobili Lamborghini S.p.A.

Topping up/filling the gearbox oil

Preliminary operations

- Lift the vehicle on the car lift **(000000)**.

1. Pour in oil of the prescribed type through the filler (**A-Fig.1**) until the oil level reaches the lower edge of the filler; clean the plug and then tighten it.

Fig.1

® Automobili Lamborghini S.p.A.
The information and procedures published below are strictly confidential and exclusively for the Lamborghini Dealer Network and Authorized Service Points. All copyrights are property of Automobili Lamborghini S.p.A based on copyright law. All of the PDF chapters in the WEB workshop manuals described below are based on information available at the time of publication. The company reserves the right to make updates and modifications. The following are prohibited: reprinting, reproduction, forwarding to unauthorized people and/or third parties, and translation, including partial, without written authorization from Automobili Lamborghini S.p.A.

GEARBOX OVERHAUL

STOP **The following procedures can only be completely carried out after removing the gearbox (030103) from the vehicle.**

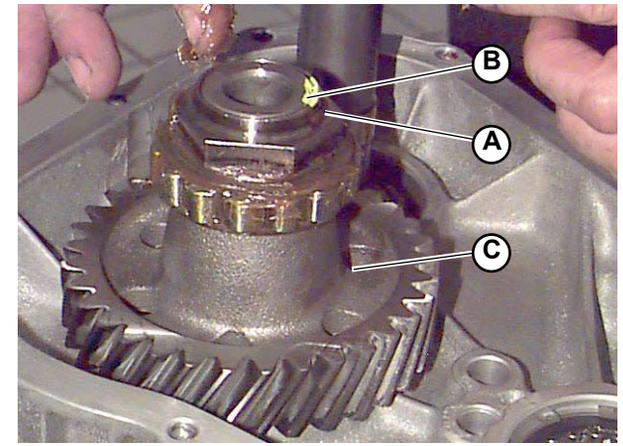

Fig.1

On the countershaft:

- Remove the caulking from the transmission driving gear (3) mounting ring nut (**A-Fig.1**) and then remove the ring nut.
- Remove the needles from the bearing (**B-Fig.1**) and the fiber cage.
- Check the needles for wear and/or damage.

- Remove the transmission driving gear (**C-Fig.1**) from the countershaft with the needle bearing (**B-Fig.1**) inner ring by means of a suitable puller; check for gear and bearing inner ring wear and/or damage.

- In case of needle bearing (**B-Fig.1**) replacement, remove the bearing outer ring retaining snap ring (**D-Fig.2**) from the clutch housing and then remove the outer ring (**E-Fig.2**).

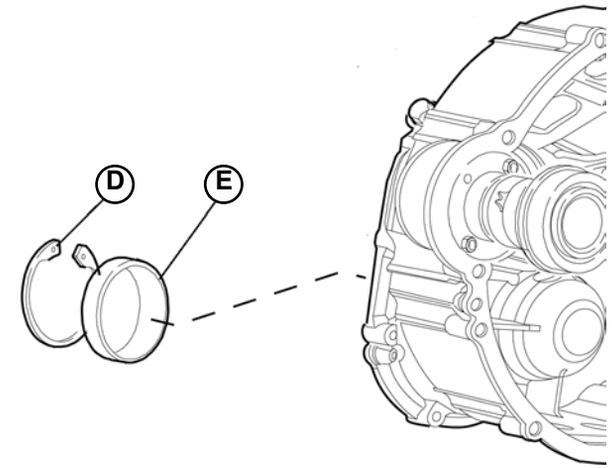

Fig.2

® Automobili Lamborghini S.p.A.
The information and procedures published below are strictly confidential and exclusively for the Lamborghini Dealer Network and Authorized Service Points. All copyrights are property of Automobili Lamborghini S.p.A based on copyright law. All of the PDF chapters in the WEB workshop manuals described below are based on information available at the time of publication. The company reserves the right to make updates and modifications. The following are prohibited: reprinting, reproduction, forwarding to unauthorized people and/or third parties, and translation, including partial, without written authorization from Automobili Lamborghini S.p.A.

On the clutch housing

- Remove the drive side oil seal.
- Remove the oil seal retaining snap ring.

- Lock the clutch housing properly and remove the drive gear locking ring nut by means of P/N 62495074 special wrench.
- Remove the drive gear from the clutch housing.

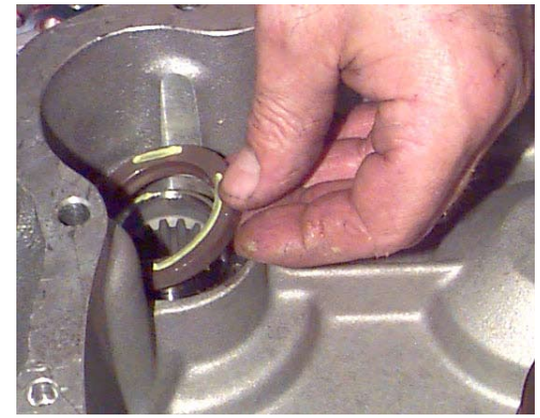

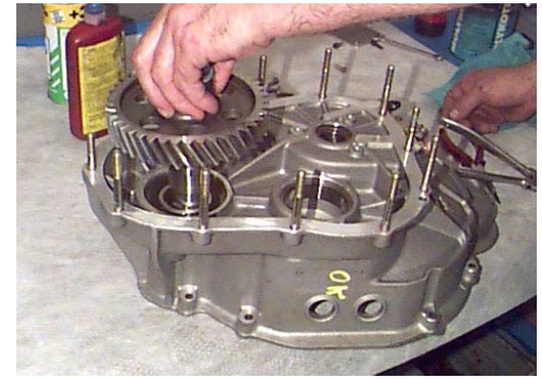

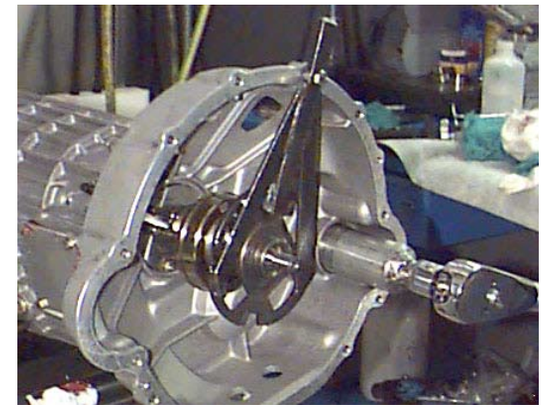

Fig.3

® Automobili Lamborghini S.p.A.
The information and procedures published below are strictly confidential and exclusively for the Lamborghini Dealer Network and Authorized Service Points. All copyrights are property of Automobili Lamborghini S.p.A based on copyright law. All of the PDF chapters in the WEB workshop manuals described below are based on information available at the time of publication. The company reserves the right to make updates and modifications. The following are prohibited: reprinting, reproduction, forwarding to unauthorized people and/or third parties, and translation, including partial, without written authorization from Automobili Lamborghini S.p.A.

- Check the drive gear gearbox side bearing for wear; if necessary, replace it as follows:
  - remove the outer ring (**A-Fig.4**) locking snap ring (**B-Fig.4**) with the gearbox and remove the outer ring (**A-Fig.4**);
  - remove the bearing inner ring (**F-Fig.4**) locking snap ring (**G-Fig.4**) with the gear (**C-Fig.4**) and remove the outer ring.

- If necessary, replace the clutch housing drive ball bearing (**E-Fig.4**), remove the snap ring (**D-Fig.4**) and remove the bearing (**E-Fig.4**) from the clutch housing by means of a suitable pad.

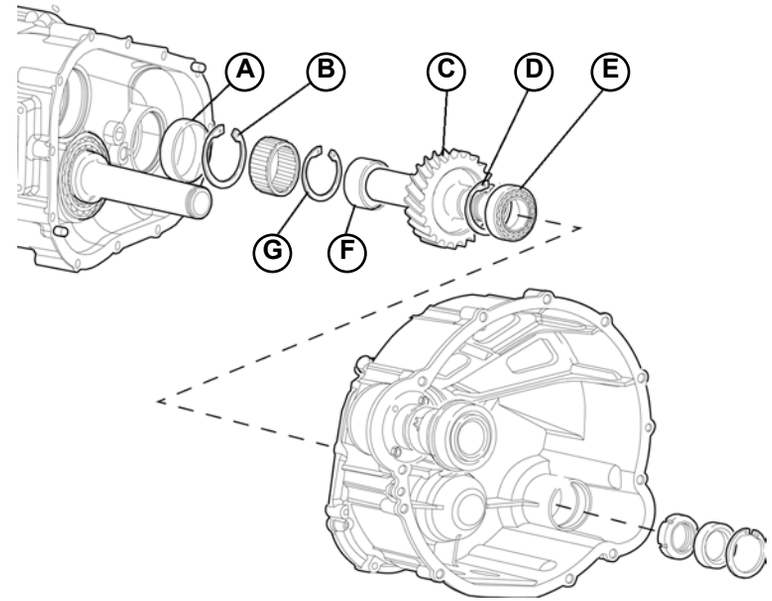

Fig.4

® Automobili Lamborghini S.p.A.
The information and procedures published below are strictly confidential and exclusively for the Lamborghini Dealer Network and Authorized Service Points. All copyrights are property of Automobili Lamborghini S.p.A based on copyright law. All of the PDF chapters in the WEB workshop manuals described below are based on information available at the time of publication. The company reserves the right to make updates and modifications. The following are prohibited: reprinting, reproduction, forwarding to unauthorized people and/or third parties, and translation, including partial, without written authorization from Automobili Lamborghini S.p.A.

- If previously removed, introduce the ball bearing in the drive gear in the clutch housing and lock it into place by means of the snap ring.
- Insert the driven gear in the clutch housing.
- Fasten the clutch housing properly, screw the drive gear locking ring nut in the clutch housing and tighten it by means of P/N 62495074 special wrench.
- Fasten the oil seal locking snap ring and install a new oil seal.

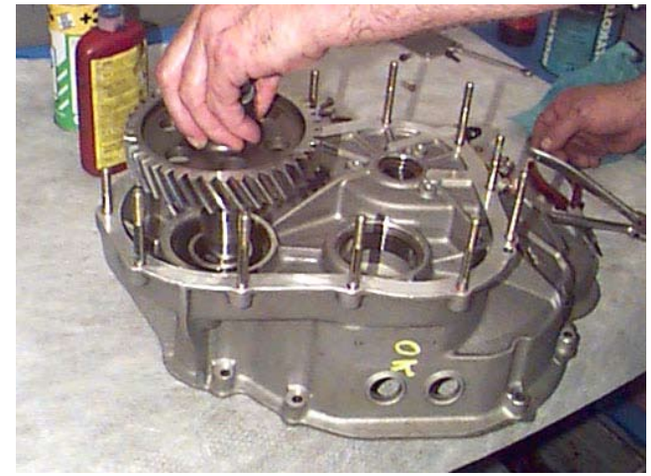

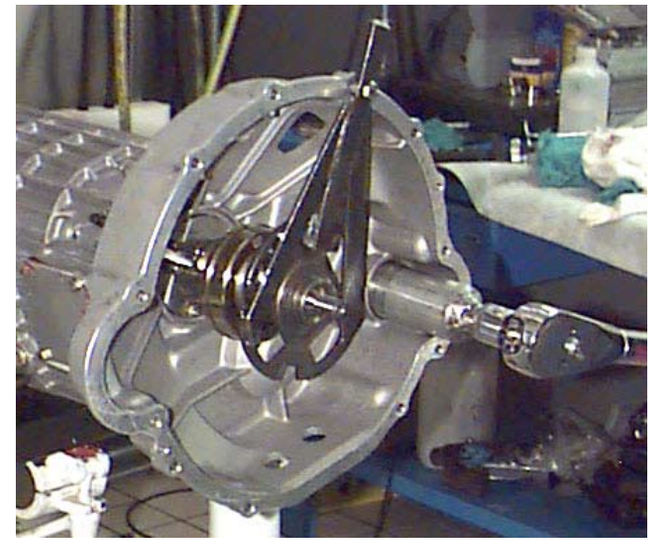

Fig.5

® Automobili Lamborghini S.p.A.
The information and procedures published below are strictly confidential and exclusively for the Lamborghini Dealer Network and Authorized Service Points. All copyrights are property of Automobili Lamborghini S.p.A based on copyright law. All of the PDF chapters in the WEB workshop manuals described below are based on information available at the time of publication. The company reserves the right to make updates and modifications. The following are prohibited: reprinting, reproduction, forwarding to unauthorized people and/or third parties, and translation, including partial, without written authorization from Automobili Lamborghini S.p.A.

- If previously removed, install the gearbox side needle bearing of drive gear as follows:
  - install the outer ring (with its needles) in the gearbox cover suitable seat and lock it into place by means of the snap ring;
  - install the inner ring on the drive gear and lock it into place by means of the snap ring;
- Insert the driving gear on the gearbox countershaft until complete bedding (tap with a plastic hammer);

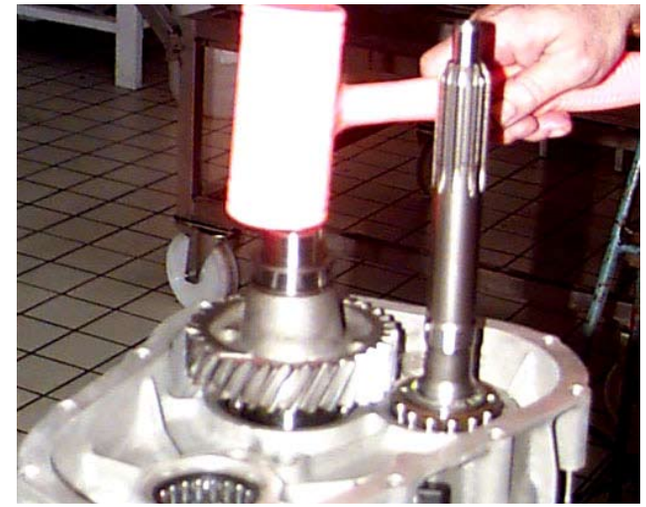

- Hot-install the needle bearing inner ring on the countershaft.

Fig.6

® Automobili Lamborghini S.p.A.
The information and procedures published below are strictly confidential and exclusively for the Lamborghini Dealer Network and Authorized Service Points. All copyrights are property of Automobili Lamborghini S.p.A based on copyright law. All of the PDF chapters in the WEB workshop manuals described below are based on information available at the time of publication. The company reserves the right to make updates and modifications. The following are prohibited: reprinting, reproduction, forwarding to unauthorized people and/or third parties, and translation, including partial, without written authorization from Automobili Lamborghini S.p.A.

Install the cage and the needles on the bearing inner ring.

- Lock the gear properly.
- Install the driving gear mounting ring nut on the countershaft by tightening with Molycote 1000.
- Caulk the ring nut.
- Apply grease on the bearing needles.

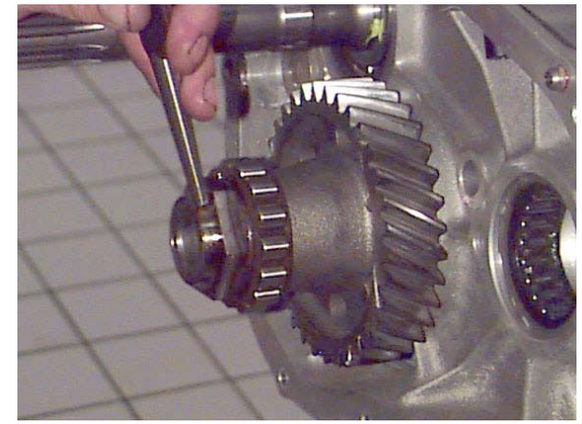

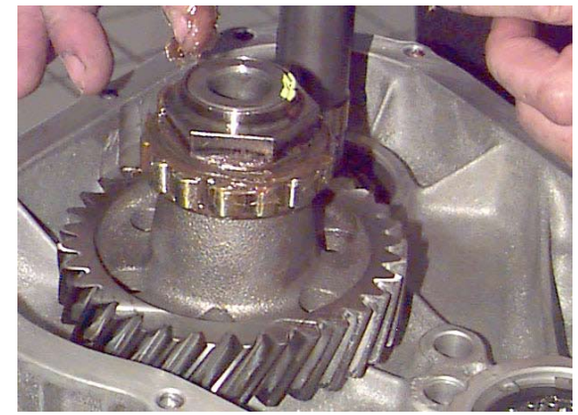

Fig.7

® Automobili Lamborghini S.p.A.
The information and procedures published below are strictly confidential and exclusively for the Lamborghini Dealer Network and Authorized Service Points. All copyrights are property of Automobili Lamborghini S.p.A based on copyright law. All of the PDF chapters in the WEB workshop manuals described below are based on information available at the time of publication. The company reserves the right to make updates and modifications. The following are prohibited: reprinting, reproduction, forwarding to unauthorized people and/or third parties, and translation, including partial, without written authorization from Automobili Lamborghini S.p.A.

Gears & shafts disassembly

Preliminary operations

- Disassemble the gearbox **(030103)**.

Gears & shafts disassembly

1. Unscrew the fixing nut on the gearbox.

2. Extract the reverse gear transmission gear shaft from the gearbox along with the shims and gear.

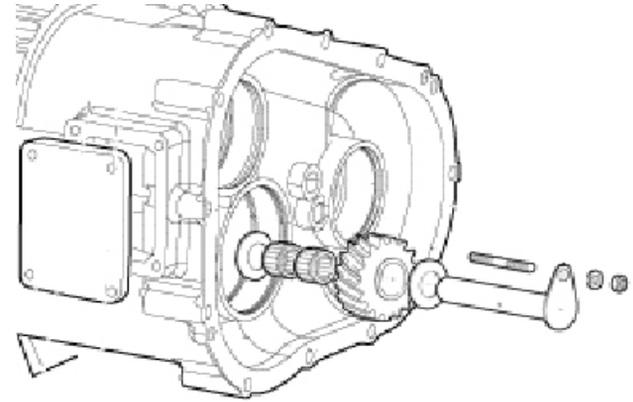

Fig.1

® Automobili Lamborghini S.p.A.
The information and procedures published below are strictly confidential and exclusively for the Lamborghini Dealer Network and Authorized Service Points. All copyrights are property of Automobili Lamborghini S.p.A based on copyright law. All of the PDF chapters in the WEB workshop manuals described below are based on information available at the time of publication. The company reserves the right to make updates and modifications. The following are prohibited: reprinting, reproduction, forwarding to unauthorized people and/or third parties, and translation, including partial, without written authorization from Automobili Lamborghini S.p.A.

3. Unscrew the ring nut on the main shaft (oil pump side) using P/N 62495086 wrench (**Fig.2**).

4. Unscrew the ring nut on the countershaft (oil pump side) using P/N 62495086 wrench (**Fig.2**).

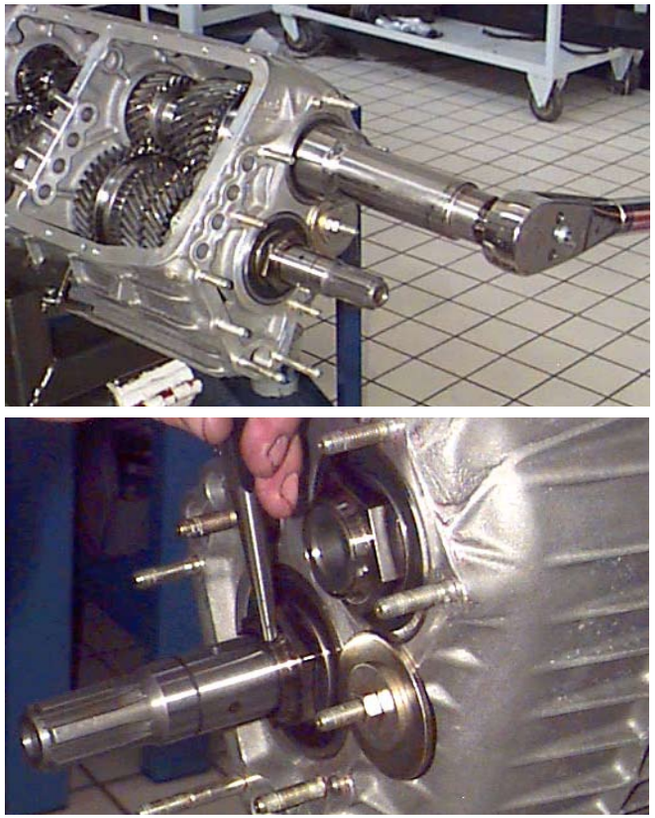

Fig.2

5. Release the bearings from the washer secured to one of the stud bolts on the box (oil pump side).

6. Disassemble the main shaft and countershaft bearings (oil pump side).

7. Position the gearbox vertically with the pump side facing downwards.

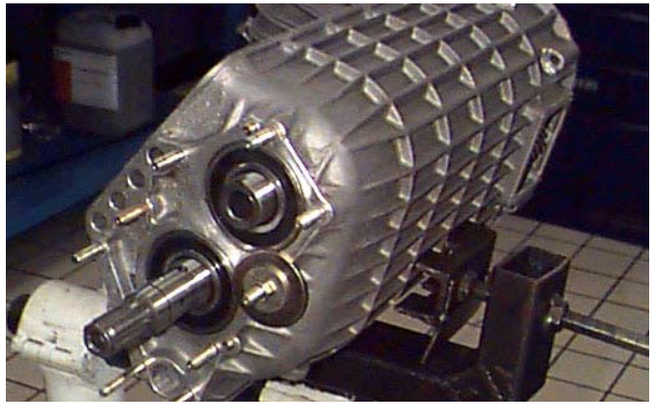

Fig.3

® Automobili Lamborghini S.p.A.
The information and procedures published below are strictly confidential and exclusively for the Lamborghini Dealer Network and Authorized Service Points. All copyrights are property of Automobili Lamborghini S.p.A based on copyright law. All of the PDF chapters in the WEB workshop manuals described below are based on information available at the time of publication. The company reserves the right to make updates and modifications. The following are prohibited: reprinting, reproduction, forwarding to unauthorized people and/or third parties, and translation, including partial, without written authorization from Automobili Lamborghini S.p.A.

8. Carefully extract the countershaft (**A-Fig.4**) from the gearbox, allowing it to pass through all the gears; do not force. If necessary, slightly turn one or more gears (also on the main shaft) until the gear and shaft grooves achieve an angle where they match perfectly; then raise the shaft.

9. Carefully extract the countershaft (**B-Fig.4**) from the gearbox, allowing it to pass through all the gears; do not force. If necessary, slightly turn one or more gears until the gear and shaft grooves achieve an angle where they match perfectly; then raise the shaft.

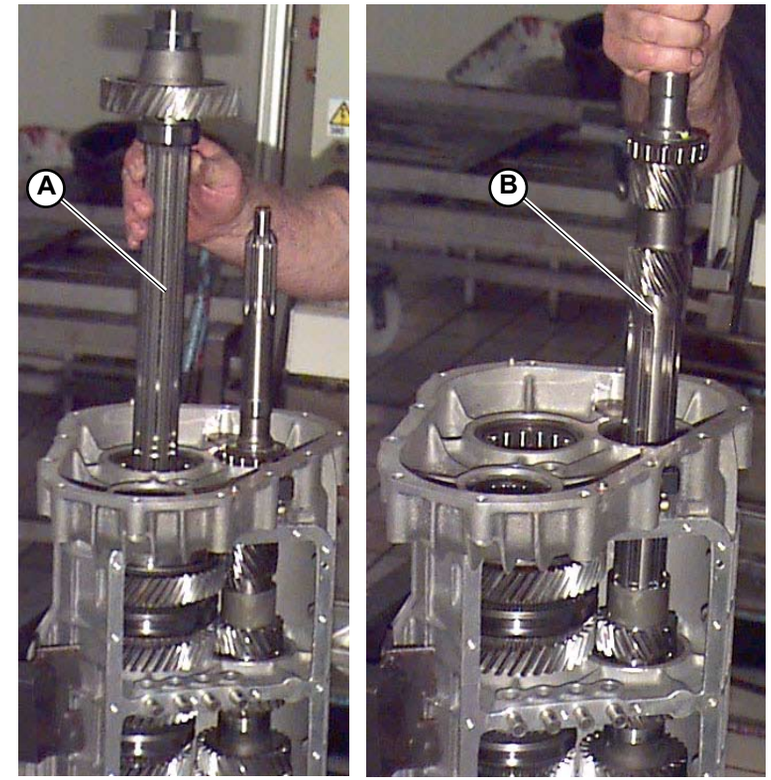

Fig.4

® Automobili Lamborghini S.p.A.
The information and procedures published below are strictly confidential and exclusively for the Lamborghini Dealer Network and Authorized Service Points. All copyrights are property of Automobili Lamborghini S.p.A based on copyright law. All of the PDF chapters in the WEB workshop manuals described below are based on information available at the time of publication. The company reserves the right to make updates and modifications. The following are prohibited: reprinting, reproduction, forwarding to unauthorized people and/or third parties, and translation, including partial, without written authorization from Automobili Lamborghini S.p.A.

Disassembling the main shaft

10. Disassemble the needle cage and the needles from the clutch housing bearing on the main shaft.

11. Remove the snap ring and disassemble the bearing inner ring (main shaft clutch housing side).

Disassembling the countershaft

12. Disassemble the bearing inner ring (countershaft clutch housing side).

NOTE
The countershaft transmission gear and relative bearing may, or may not, have already been disassembled depending on the previous operative step.

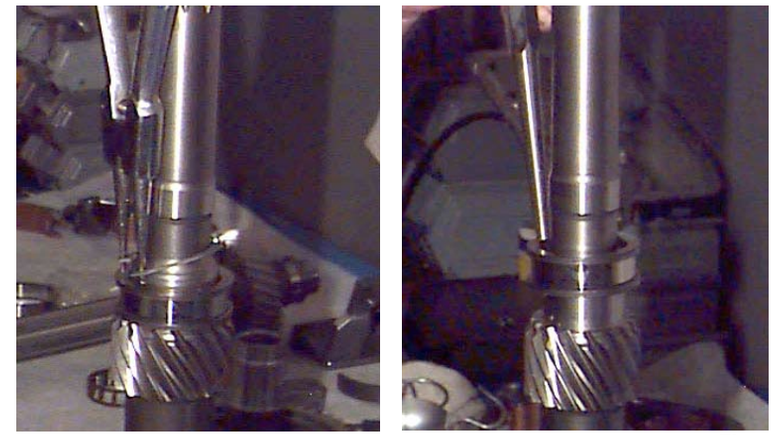

Fig.5

® Automobili Lamborghini S.p.A.
The information and procedures published below are strictly confidential and exclusively for the Lamborghini Dealer Network and Authorized Service Points. All copyrights are property of Automobili Lamborghini S.p.A based on copyright law. All of the PDF chapters in the WEB workshop manuals described below are based on information available at the time of publication. The company reserves the right to make updates and modifications. The following are prohibited: reprinting, reproduction, forwarding to unauthorized people and/or third parties, and translation, including partial, without written authorization from Automobili Lamborghini S.p.A.

13. Extract and position on the bench the countershaft mobile gear set (clutch housing side) (2nd, 1st/2nd synchronizer, reverse gear synchronizer, reverse gear) located in the upper part of the gearbox (clutch housing side).

A.	2nd gear bushing
B.	2nd gear bushing
C.	2nd gear
D.	1st/2nd gear synchronizer
E.	1st gear
F.	1st gear needle cage
G.	1st gear bushing
H.	Shim
I	Reverse gear synchronizer
L.	Reverse gear
M.	Reverse gear needle cage
N.	Reverse gear bushing

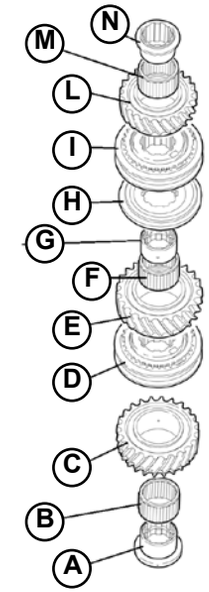

Fig.6

® Automobili Lamborghini S.p.A.
The information and procedures published below are strictly confidential and exclusively for the Lamborghini Dealer Network and Authorized Service Points. All copyrights are property of Automobili Lamborghini S.p.A based on copyright law. All of the PDF chapters in the WEB workshop manuals described below are based on information available at the time of publication. The company reserves the right to make updates and modifications. The following are prohibited: reprinting, reproduction, forwarding to unauthorized people and/or third parties, and translation, including partial, without written authorization from Automobili Lamborghini S.p.A.

14. Remove the 2nd gear and the main shaft spacer from the upper part of the gearbox (clutch housing side).
15. Remove the main shaft and countershaft central bearing inner ring.
16. Remove and arrange at the bench the main shaft mobile gear set (pump side) (6th, 5th/6th, 5th, 4th, 3rd synchronizer) located in the lower part of the gearbox (pump side).

A.	6th gear bushing
B.	6th gear needle cage
C.	2nd gear bushing
D.	5th/6th gear synchronizer
E.	5th gear bushing
F.	5th gear needle cage
G.	5th gear
H.	4th gear
I.	3rd gear
L.	Central bearing inner ring
M.	2nd gear
N.	Spacer

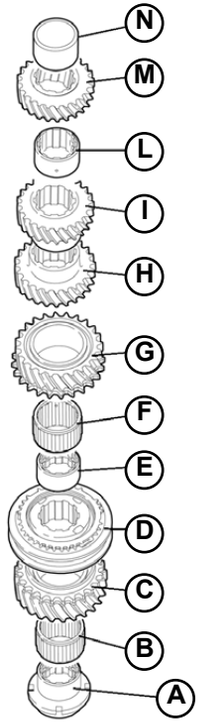

Fig.7

® Automobili Lamborghini S.p.A.
The information and procedures published below are strictly confidential and exclusively for the Lamborghini Dealer Network and Authorized Service Points. All copyrights are property of Automobili Lamborghini S.p.A based on copyright law. All of the PDF chapters in the WEB workshop manuals described below are based on information available at the time of publication. The company reserves the right to make updates and modifications. The following are prohibited: reprinting, reproduction, forwarding to unauthorized people and/or third parties, and translation, including partial, without written authorization from Automobili Lamborghini S.p.A.

17. Remove and arrange at the bench the countershaft mobile gear set (pump side) (spacer, 6th, 5th, 4th, 3rd/4th, 3rd synchronizer) located in the lower part of the gearbox (pump side).
18. Re-position the gearbox horizontally.

A.	Spacer
B.	6th gear
C.	5th gear
D.	4th gear
E.	4th gear needle cage
F.	4th gear bushing
G.	3rd/4th gear synchronizer
H.	3rd gear
I.	3rd gear needle cage
L.	3rd gear bushing

19. Disassemble the countershaft bearing outer ring and needle cage (clutch housing side).
20. Disassemble the main shaft bearing outer ring (clutch housing side).
21. Disassemble the two snap rings (gear side) on the main shaft and countershaft bearing (clutch housing side).
22. Release the snap rings and disassemble the outer ring and the needles on the main shaft and countershaft central bearings.
23. Disassemble the two snap rings (pump side) on the main shaft and countershaft central bearings.

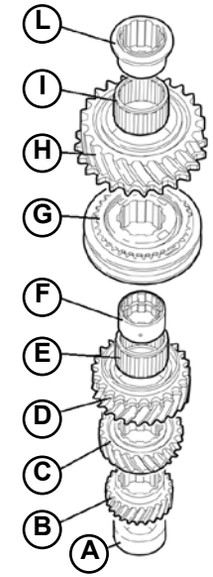

Fig.8

® Automobili Lamborghini S.p.A.
The information and procedures published below are strictly confidential and exclusively for the Lamborghini Dealer Network and Authorized Service Points. All copyrights are property of Automobili Lamborghini S.p.A based on copyright law. All of the PDF chapters in the WEB workshop manuals described below are based on information available at the time of publication. The company reserves the right to make updates and modifications. The following are prohibited: reprinting, reproduction, forwarding to unauthorized people and/or third parties, and translation, including partial, without written authorization from Automobili Lamborghini S.p.A.

Gears & shafts assembly

1. Install the two pump side snap rings of the main shaft and countershaft central bearings.
2. Install the outer ring and the needles of the main shaft and countershaft central bearings by means of a suitable pad; lock them by means of snap rings.
3. Install the two gear side snap rings of the main shaft and countershaft clutch housing side bearing.
4. Install the clutch housing side bearing outer ring of the main shaft.
5. Install the clutch housing side bearing outer ring and needle cage of the countershaft.
6. Position the gearbox vertically with the clutch housing side facing upwards.
7. Arrange at the bench the mobile gear set of the pump side countershaft (spacer, 6th, 5th, 4th, 3rd/4th, 3rd synchronizer) and position it in the lower part of the pump side gearbox.

A.	Spacer
B.	6th gear
C.	5th gear
D.	4th gear
E.	4th gear needle cage
F.	4th gear bushing
G.	3rd/4th gear synchronizer
H.	3rd gear
I.	3rd gear needle cage
L.	3rd gear bushing

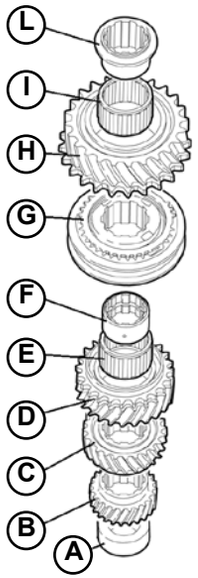

Fig.1

® Automobili Lamborghini S.p.A.
The information and procedures published below are strictly confidential and exclusively for the Lamborghini Dealer Network and Authorized Service Points. All copyrights are property of Automobili Lamborghini S.p.A based on copyright law. All of the PDF chapters in the WEB workshop manuals described below are based on information available at the time of publication. The company reserves the right to make updates and modifications. The following are prohibited: reprinting, reproduction, forwarding to unauthorized people and/or third parties, and translation, including partial, without written authorization from Automobili Lamborghini S.p.A.

8. Arrange at the bench the mobile gear set of the pump side main shaft (6th, 5th/6th, 5th, 4th, 3rd synchronizer) and position it in the lower part of the pump side gearbox.
9. Install the main shaft and countershaft central bearing inner ring
10. Position the 2nd gear and the main shaft spacer on the clutch housing side gearbox top.

A.	6th gear bushing
B.	6th gear needle cage
C.	2nd gear bushing
D.	5th/6th gear synchronizer
E.	5th gear bushing
F.	5th gear needle cage
G.	5th gear
H.	4th gear
I.	3rd gear
L.	Central bearing inner ring
M.	2nd gear
N.	Spacer

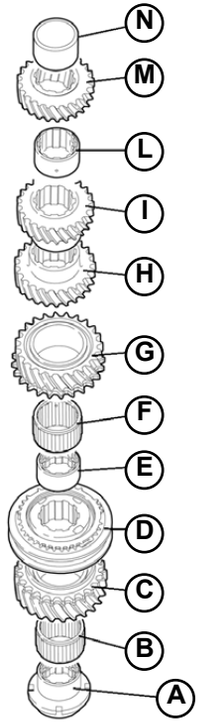

Fig.2

® Automobili Lamborghini S.p.A.
The information and procedures published below are strictly confidential and exclusively for the Lamborghini Dealer Network and Authorized Service Points. All copyrights are property of Automobili Lamborghini S.p.A based on copyright law. All of the PDF chapters in the WEB workshop manuals described below are based on information available at the time of publication. The company reserves the right to make updates and modifications. The following are prohibited: reprinting, reproduction, forwarding to unauthorized people and/or third parties, and translation, including partial, without written authorization from Automobili Lamborghini S.p.A.

11. Arrange at the bench the mobile gear set of the clutch housing side countershaft (2nd, 1st/2nd synchronizer, reverse gear synchronizer, reverse gear) and position it in the upper part of the clutch housing side gearbox.

A.	2nd gear bushing
B.	2nd gear bushing
C.	2nd gear
D.	1st/2nd gear synchronizer
E.	1st gear
F.	1st gear needle cage
G.	1st gear bushing
H.	Shim
I	Reverse gear synchronizer
L.	Reverse gear
M.	Reverse gear needle cage
N.	Reverse gear bushing

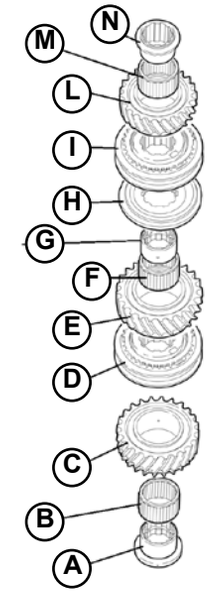

Fig.3

® Automobili Lamborghini S.p.A.
The information and procedures published below are strictly confidential and exclusively for the Lamborghini Dealer Network and Authorized Service Points. All copyrights are property of Automobili Lamborghini S.p.A based on copyright law. All of the PDF chapters in the WEB workshop manuals described below are based on information available at the time of publication. The company reserves the right to make updates and modifications. The following are prohibited: reprinting, reproduction, forwarding to unauthorized people and/or third parties, and translation, including partial, without written authorization from Automobili Lamborghini S.p.A.

Main shaft preparation

12. Hot-install the clutch housing side bearing inner ring of the main shaft and fasten it by means of the snap ring.

13. Install the needle cage and the needles on the clutch housing bearing of the main shaft.

Fig.4

® Automobili Lamborghini S.p.A.
The information and procedures published below are strictly confidential and exclusively for the Lamborghini Dealer Network and Authorized Service Points. All copyrights are property of Automobili Lamborghini S.p.A based on copyright law. All of the PDF chapters in the WEB workshop manuals described below are based on information available at the time of publication. The company reserves the right to make updates and modifications. The following are prohibited: reprinting, reproduction, forwarding to unauthorized people and/or third parties, and translation, including partial, without written authorization from Automobili Lamborghini S.p.A.

Countershaft preparation

14. Hot-install the clutch housing side bearing inner ring of the countershaft.

NOTE
The countershaft may, or may not, have the transmission gear and its bearing already installed depending on the previous operative step.

® Automobili Lamborghini S.p.A.
The information and procedures published below are strictly confidential and exclusively for the Lamborghini Dealer Network and Authorized Service Points. All copyrights are property of Automobili Lamborghini S.p.A based on copyright law. All of the PDF chapters in the WEB workshop manuals described below are based on information available at the time of publication. The company reserves the right to make updates and modifications. The following are prohibited: reprinting, reproduction, forwarding to unauthorized people and/or third parties, and translation, including partial, without written authorization from Automobili Lamborghini S.p.A.

15. Insert carefully the main shaft (**A-Fig.5**) in the gearbox letting it pass through all the gears; do not force; if necessary, turn one or more gears until the correct angular position in which the gear and shaft grooves match perfectly is found and then press on the shaft.

16. Insert carefully the countershaft (**B-Fig.5**) in the gearbox letting it pass through all the gears; do not force; if necessary, turn one or more gears (of the main shaft as well) until the correct angular position in which the gear and shaft grooves match perfectly is found and then press on the shaft.

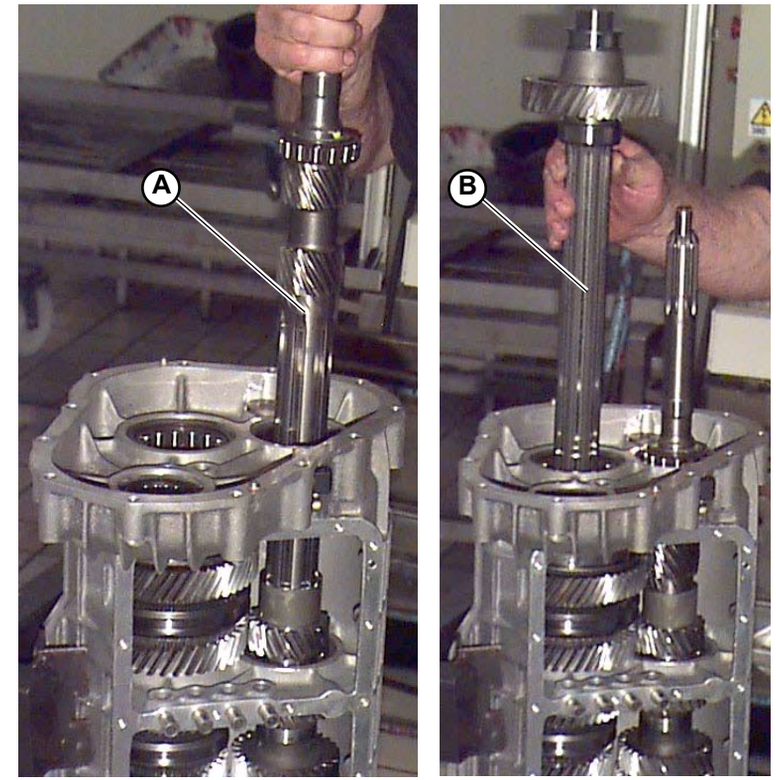

Fig.5

® Automobili Lamborghini S.p.A.
The information and procedures published below are strictly confidential and exclusively for the Lamborghini Dealer Network and Authorized Service Points. All copyrights are property of Automobili Lamborghini S.p.A based on copyright law. All of the PDF chapters in the WEB workshop manuals described below are based on information available at the time of publication. The company reserves the right to make updates and modifications. The following are prohibited: reprinting, reproduction, forwarding to unauthorized people and/or third parties, and translation, including partial, without written authorization from Automobili Lamborghini S.p.A.

17. Position the gearbox horizontally.

18. Install the main shaft and countershaft oil pump side bearings by means of a suitable pad

19. Lock the bearings by means of a big washer mounted to one of the oil pump side gearbox stud bolts.

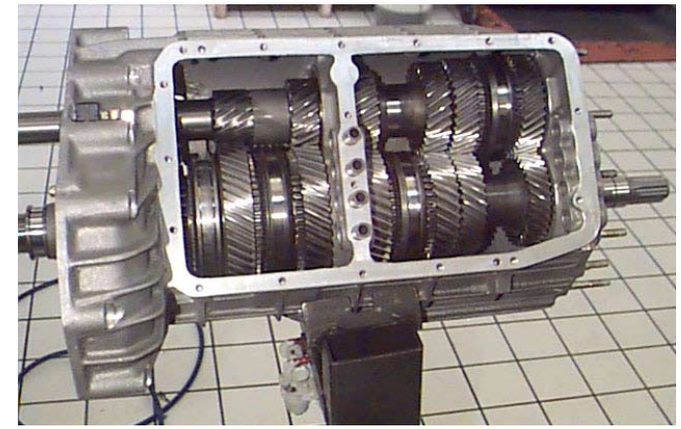

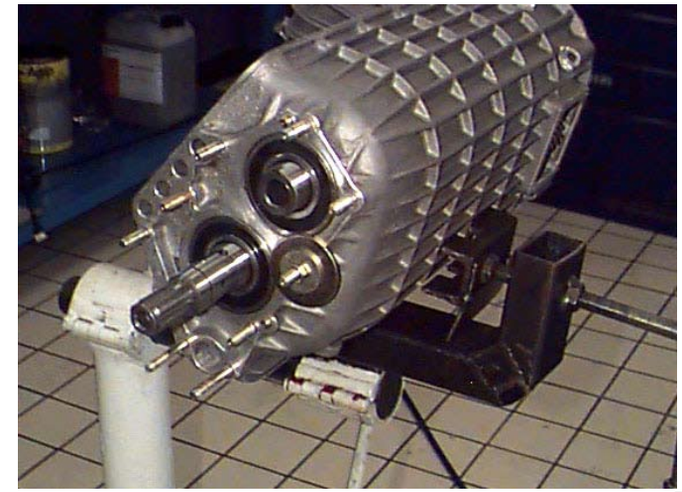

Fig.6

® Automobili Lamborghini S.p.A.
The information and procedures published below are strictly confidential and exclusively for the Lamborghini Dealer Network and Authorized Service Points. All copyrights are property of Automobili Lamborghini S.p.A based on copyright law. All of the PDF chapters in the WEB workshop manuals described below are based on information available at the time of publication. The company reserves the right to make updates and modifications. The following are prohibited: reprinting, reproduction, forwarding to unauthorized people and/or third parties, and translation, including partial, without written authorization from Automobili Lamborghini S.p.A.

20. Apply Molycote 1000 on the oil pump side main shaft thread.
21. Screw the ring nut and tighten by wrench **(000200-17a)**.
Ring nut tightening: tightening torque (000800-30d).

22. Apply Molycote 1000 on the oil pump side countershaft thread.
23. Screw the ring nut and tighten by wrench **(000200-17a)**.
Ring nut tightening: tightening torque (000800-30d).

24. Caulk the main shaft and countershaft ring nut.

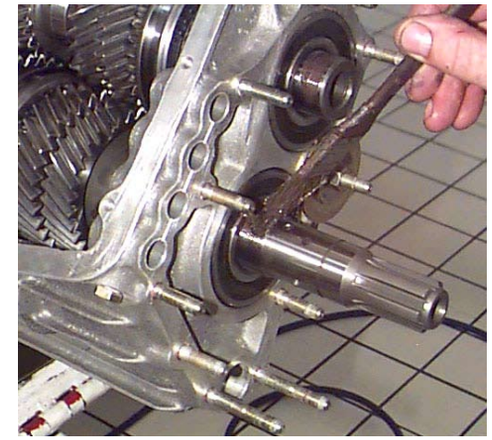

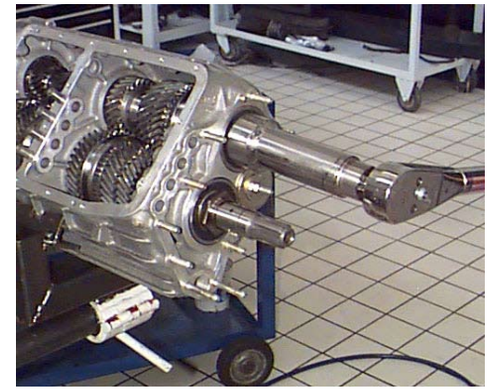

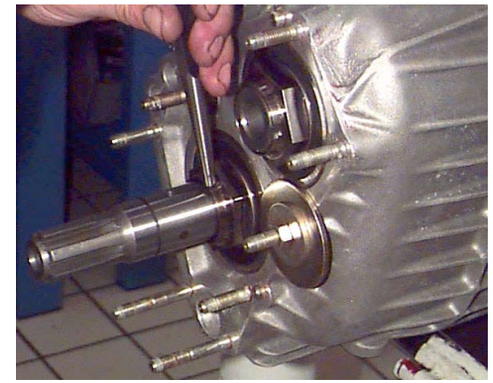

Fig.7

® Automobili Lamborghini S.p.A.
The information and procedures published below are strictly confidential and exclusively for the Lamborghini Dealer Network and Authorized Service Points. All copyrights are property of Automobili Lamborghini S.p.A based on copyright law. All of the PDF chapters in the WEB workshop manuals described below are based on information available at the time of publication. The company reserves the right to make updates and modifications. The following are prohibited: reprinting, reproduction, forwarding to unauthorized people and/or third parties, and translation, including partial, without written authorization from Automobili Lamborghini S.p.A.

25. Introduce the reverse gear transmission gear shaft in the gearbox with shims and gear.
26. Tighten the mounting nut and use Locktite 51A42 medium thread sealant.

- Assemble the gearbox **(030105)**.

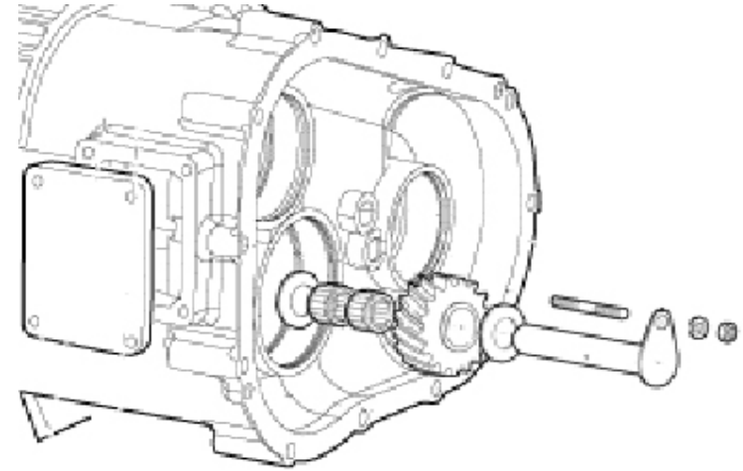

Fig.8

® Automobili Lamborghini S.p.A.
The information and procedures published below are strictly confidential and exclusively for the Lamborghini Dealer Network and Authorized Service Points. All copyrights are property of Automobili Lamborghini S.p.A based on copyright law. All of the PDF chapters in the WEB workshop manuals described below are based on information available at the time of publication. The company reserves the right to make updates and modifications. The following are prohibited: reprinting, reproduction, forwarding to unauthorized people and/or third parties, and translation, including partial, without written authorization from Automobili Lamborghini S.p.A.

Gears & shafts overhaul

- Clean all components thoroughly.

- Check:
  - that the gear tooth profile surfaces are not cracked, scored or scratched and that the side surfaces are not worn or grooved;
  - that the interlocking teeth of the sleeves and idle gears have no burrs, that sliding between hub and sleeves is without clearance or friction; check that springs, synchronizer shoes and relevant sliding surfaces are intact;
  - that the needle cages are in good conditions;
  - that the bearing races are not burnished or seized;
  - that the main shaft and countershaft threads and splined profiles have no dents or grooving;

  If faults are found, restore or replace the damaged parts.

STOP **If a gear is replaced (the whole shaft for the 1st gear or reverse gear as for the main shaft), the corresponding gear on the countershaft must also be replaced**.

- Assemble the synchronizers inserting in each of the three hub seats at the same time and in this sequence: the spring (**A-Fig.1**), the journal (**B-Fig.1**) and the shoe (**C-Fig.1**) and inserting the engagement sleeve in centered position to hold the components into place; position the toothed ring on each side.

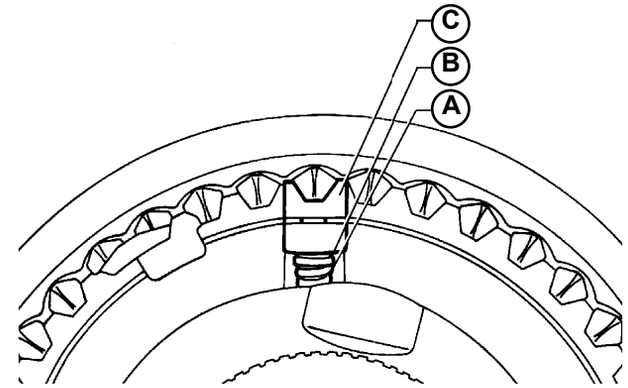

Fig.1

® Automobili Lamborghini S.p.A.
The information and procedures published below are strictly confidential and exclusively for the Lamborghini Dealer Network and Authorized Service Points. All copyrights are property of Automobili Lamborghini S.p.A based on copyright law. All of the PDF chapters in the WEB workshop manuals described below are based on information available at the time of publication. The company reserves the right to make updates and modifications. The following are prohibited: reprinting, reproduction, forwarding to unauthorized people and/or third parties, and translation, including partial, without written authorization from Automobili Lamborghini S.p.A.

Rods / Forks check

For each tooth

- With the tool fitted in the 5th/6th tooth race, position the tooth to be fastened on a previously fastened tooth (the 1st/2nd gear tooth on the 5th/6th one) inserting a suitable shim (**A-Fig.1**), keeping it in position by means of the tool's relative screw **(000200)**.

The tool (**B-Fig.1**) and the shims (**A-Fig.1**) differ for e-gears and manual gearboxes.

- Fit the tooth in position by means of the screw with washer, apply Locktite 52A42 medium strength thread stop and tighten to the prescribed torque:
  Tooth screws; **tightening torque (000800-10b).**
  and check that the rod head notches are aligned with the marks on the oil pump side gearbox.

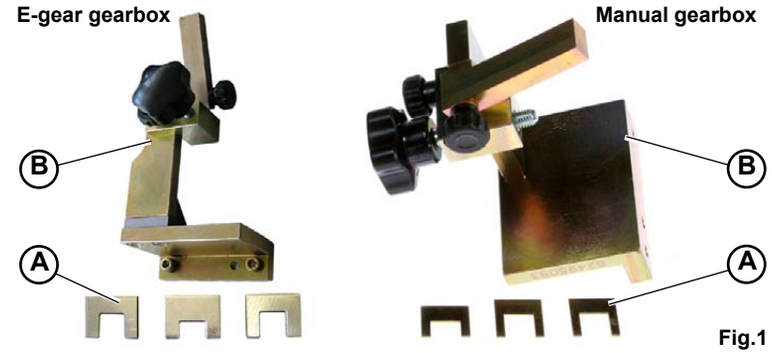

Fig.1

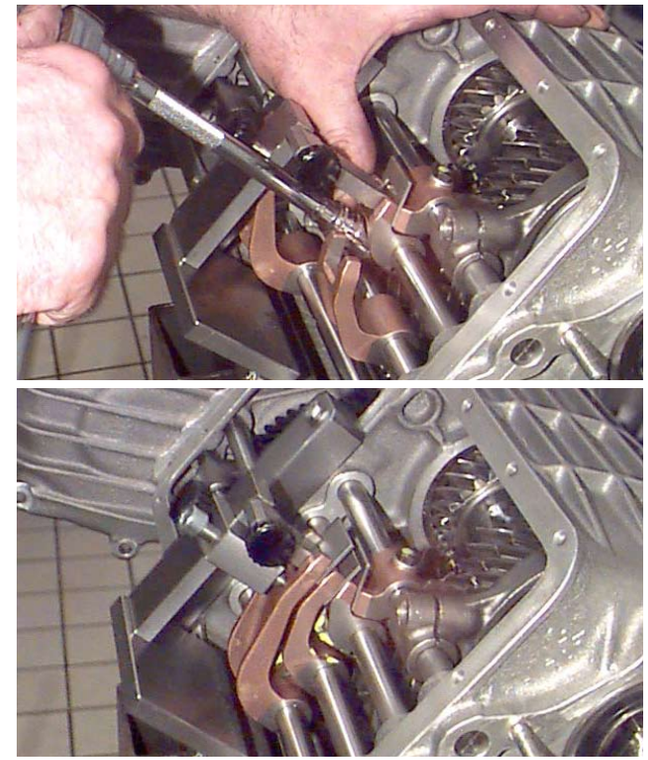
Fig.2

® Automobili Lamborghini S.p.A.
The information and procedures published below are strictly confidential and exclusively for the Lamborghini Dealer Network and Authorized Service Points. All copyrights are property of Automobili Lamborghini S.p.A based on copyright law. All of the PDF chapters in the WEB workshop manuals described below are based on information available at the time of publication. The company reserves the right to make updates and modifications. The following are prohibited: reprinting, reproduction, forwarding to unauthorized people and/or third parties, and translation, including partial, without written authorization from Automobili Lamborghini S.p.A.

For each fork

- Position the fork in the middle of its gear engagement sleeve by means of a dial gauge.
- Remove the tools at the end of the operations.
- Fit the fork in position by means of the screw with washer, apply Locktite 52A42 medium strength thread stop and tighten to the prescribed torque:
  Fork screws; **tightening torque (000800-10c).**
- Check the clearance on the sleeve and forks with engaged gears and idle gear; if the clearance (3-5 mm) is not checked, repeat the fork adjustment.
- Remove the tools at the end of the operations.
- Install the oil pump.
- Install the cover.
- Install the other assemblies (shift lever device, shift lever device support, front propeller shaft, clutch cover), if previously removed
- Adjust the gear engagement outer devices as necessary.

® Automobili Lamborghini S.p.A.
The information and procedures published below are strictly confidential and exclusively for the Lamborghini Dealer Network and Authorized Service Points. All copyrights are property of Automobili Lamborghini S.p.A based on copyright law. All of the PDF chapters in the WEB workshop manuals described below are based on information available at the time of publication. The company reserves the right to make updates and modifications. The following are prohibited: reprinting, reproduction, forwarding to unauthorized people and/or third parties, and translation, including partial, without written authorization from Automobili Lamborghini S.p.A.

Shift lever device support and shift lever device installed

Front propeller shaft pipe installed.
P/N 62495071 tool installed on propeller shaft pipe and bracket.

- Remove the gearbox cover central cap to see the control tooth.
- Remove the shift lever plate.
- Make the control rod joint boot of the shift lever device slide.
- Adjust the control rod so that, with the shift lever perfectly centered crosswise (motion A), the tooth control block is angularly centered to the teeth.
- Loosen the shift lever device screws and adjust the shift lever device position so that, with the shift lever perfectly centered lengthways (motion B), the tooth control block is axially centered to the teeth.
- Screw the shift lever device mounting screws and tighten them to the prescribed torque:
  Shift lever device screws; **tightening torque (000800-3a).**
- At the end of the operations, adjust the guard and close the gearbox cover cap and tighten manually as necessary.

® Automobili Lamborghini S.p.A.
The information and procedures published below are strictly confidential and exclusively for the Lamborghini Dealer Network and Authorized Service Points. All copyrights are property of Automobili Lamborghini S.p.A based on copyright law. All of the PDF chapters in the WEB workshop manuals described below are based on information available at the time of publication. The company reserves the right to make updates and modifications. The following are prohibited: reprinting, reproduction, forwarding to unauthorized people and/or third parties, and translation, including partial, without written authorization from Automobili Lamborghini S.p.A.

Adjusting the gearbox forks

Prerequisites

- Gearbox cover removed (**030103**).
- Oil pump removed (**011503**).

Adjustment

1. Install P/N 62495085 tool to compress the rod retaining springs (**Fig.1**).

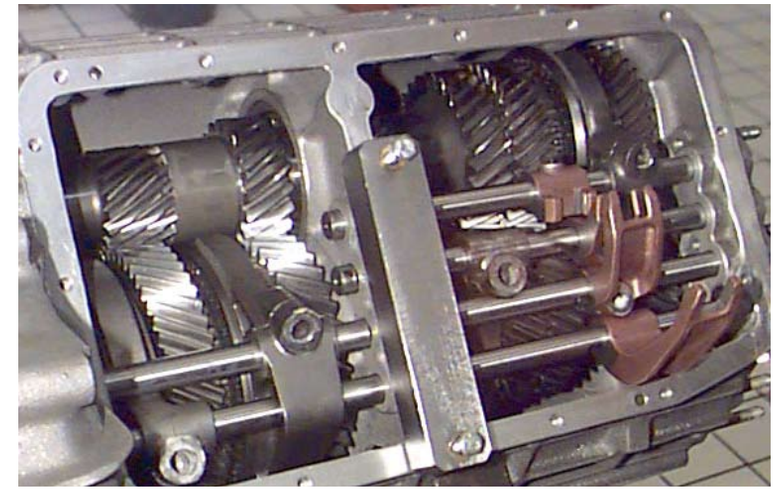

Fig.1

2. Install tool **(000200)** (**Fig.2**) for tooth adjustment; in case the introduction of the tool in the tooth race is difficult, loosen the fork and tooth screws, except the 5th/6th one (reference).

E-gear gearbox **Manual gearbox**

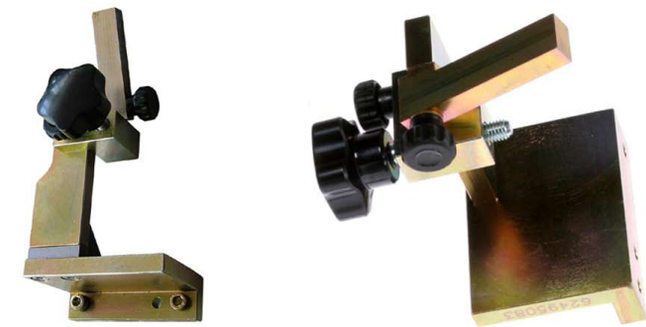

Fig.2

® Automobili Lamborghini S.p.A.
The information and procedures published below are strictly confidential and exclusively for the Lamborghini Dealer Network and Authorized Service Points. All copyrights are property of Automobili Lamborghini S.p.A based on copyright law. All of the PDF chapters in the WEB workshop manuals described below are based on information available at the time of publication. The company reserves the right to make updates and modifications. The following are prohibited: reprinting, reproduction, forwarding to unauthorized people and/or third parties, and translation, including partial, without written authorization from Automobili Lamborghini S.p.A.

3. Check that the rod head notches are aligned with the marks on the oil pump side gearbox (**Fig.3**).

Fig.3

4. Position the centering rods at zero and after securing the tooth **(A-Fig.4)**, assemble the tool for resetting the teeth **(B-Fig.4)**.
Tooth tightening torque (000800-10b).

5. After lowering the tool's flag (B-Fig.4), insert the shim **(1-Fig.4)** and hold it against the tooth **(A-Fig.4)** using the knob **(F-Fig.5)**. Then secure the tooth **(C-Fig.4)**.
Tooth tightening torque (000800-10b).

6. Insert the shim **(2-Fig.4)**, placing it against the tooth **(C-Fig.4)** using the knob **(F-Fig.5)** and secure the tooth **(D-Fig.4)**.
Tooth tightening torque (000800-10b).

7. Insert the shim **(3-Fig.4)**, placing it against the tooth **(D-Fig.4)** using the knob **(F-Fig.5)** and secure the tooth **(E-Fig.4)**.
Tooth tightening torque (000800-10b).

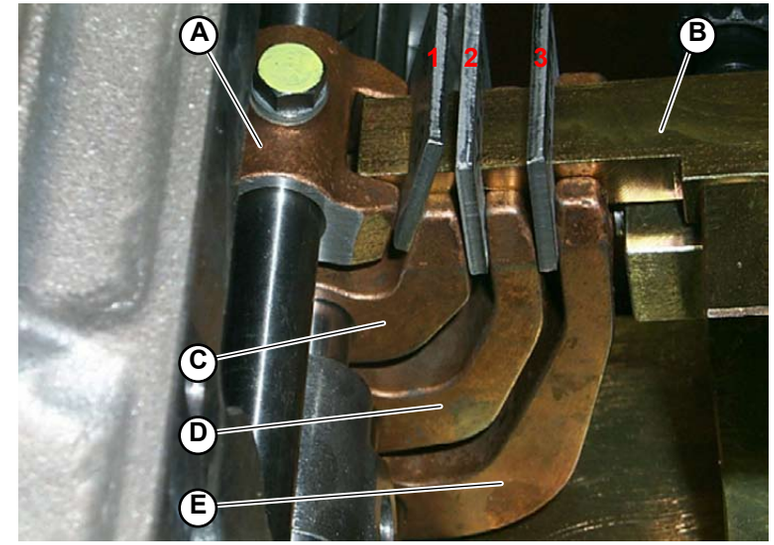

Fig.4

® Automobili Lamborghini S.p.A.
The information and procedures published below are strictly confidential and exclusively for the Lamborghini Dealer Network and Authorized Service Points. All copyrights are property of Automobili Lamborghini S.p.A based on copyright law. All of the PDF chapters in the WEB workshop manuals described below are based on information available at the time of publication. The company reserves the right to make updates and modifications. The following are prohibited: reprinting, reproduction, forwarding to unauthorized people and/or third parties, and translation, including partial, without written authorization from Automobili Lamborghini S.p.A.

8. After securing the screws onto the teeth, tighten the forks **(1/2/3-Fig.5)** as follows:
Using the tool, keep the teeth pressed down. Insert the screw in the fork but do not tighten. Using a marker, mark the stroke at one end first and then at the other end. Now tighten the fork in the middle of the two marks.
Fork tightening torque (000800-10c).

9. To tighten the fork **(4-Fig.5)**, keep it pressed in the direction of the arrow so the clearance at the base of the fork is eliminated, then tighten.
Fork tightening torque (000800-10c).

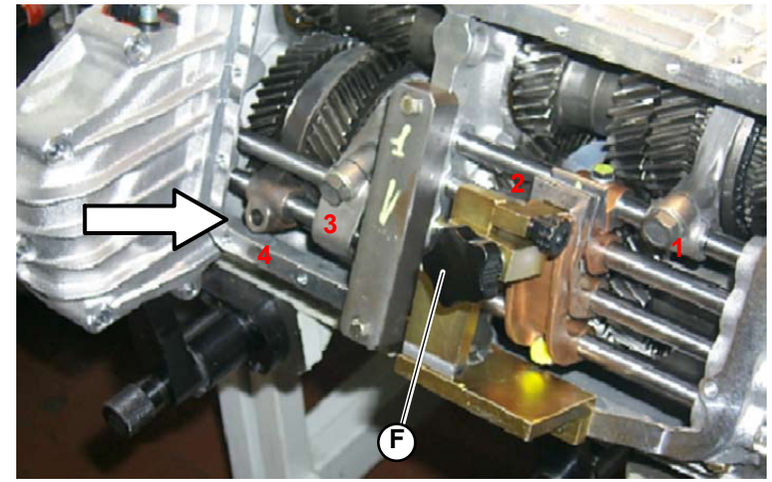

Fig.5

® Automobili Lamborghini S.p.A.
The information and procedures published below are strictly confidential and exclusively for the Lamborghini Dealer Network and Authorized Service Points. All copyrights are property of Automobili Lamborghini S.p.A based on copyright law. All of the PDF chapters in the WEB workshop manuals described below are based on information available at the time of publication. The company reserves the right to make updates and modifications. The following are prohibited: reprinting, reproduction, forwarding to unauthorized people and/or third parties, and translation, including partial, without written authorization from Automobili Lamborghini S.p.A.

Rods disassembly

Preliminary operations

- Disassemble the gearbox **(030103)**.

- **Disassemble the shift lever device:**
  1. Make the gear shift control rod joint boot slide towards the shift lever device (**Fig.1**).

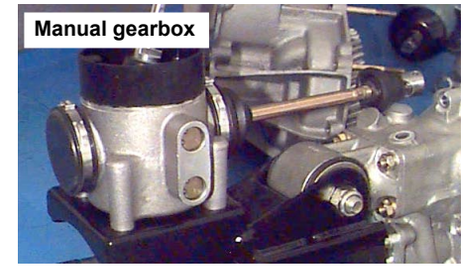

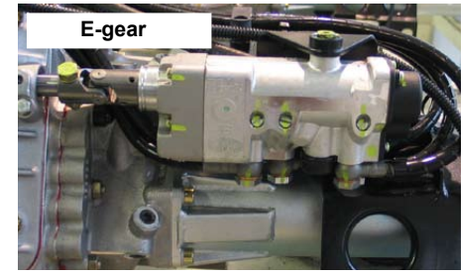

Fig.1

  2. Remove the connecting pin by means of a suitable punch (**A-Fig.2**) and then separate the shafts (Manual gearbox).
     Unscrew the screw (A-Fig.2) using a 13 mm wrench (e-gear).

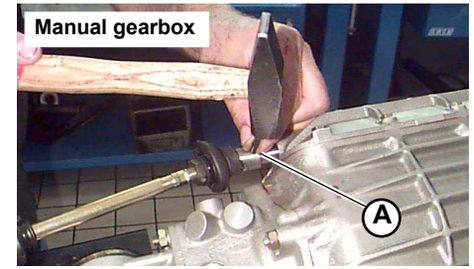

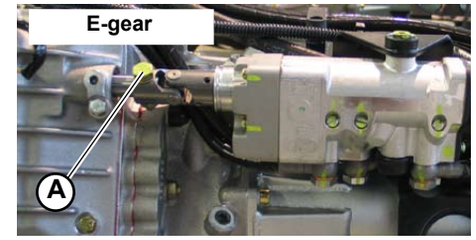

Fig.2

® Automobili Lamborghini S.p.A.
The information and procedures published below are strictly confidential and exclusively for the Lamborghini Dealer Network and Authorized Service Points. All copyrights are property of Automobili Lamborghini S.p.A based on copyright law. All of the PDF chapters in the WEB workshop manuals described below are based on information available at the time of publication. The company reserves the right to make updates and modifications. The following are prohibited: reprinting, reproduction, forwarding to unauthorized people and/or third parties, and translation, including partial, without written authorization from Automobili Lamborghini S.p.A.

3. Unscrew the mounting screws and remove the shift lever device from the support.
   Remove the shift lever device only if necessary; if necessary, separate only the gear shift control rod of the shift lever device from the shift lever (**B-Fig.3**).

4. Remove, if installed, the shift lever device mounting bracket on the propeller shaft pipe P/N 62495071.

5. Unscrew the silentblock mounting nut and remove the bolt.

6. Remove the shift lever device support from the gearbox oil pump silentblock.

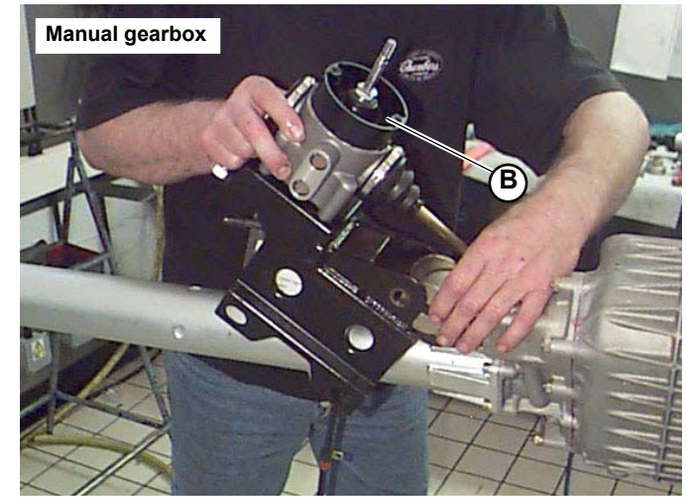

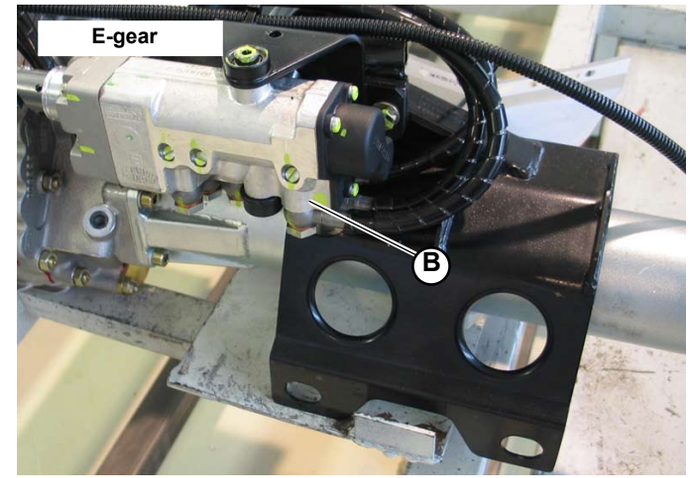

Fig.3

® Automobili Lamborghini S.p.A.
The information and procedures published below are strictly confidential and exclusively for the Lamborghini Dealer Network and Authorized Service Points. All copyrights are property of Automobili Lamborghini S.p.A based on copyright law. All of the PDF chapters in the WEB workshop manuals described below are based on information available at the time of publication. The company reserves the right to make updates and modifications. The following are prohibited: reprinting, reproduction, forwarding to unauthorized people and/or third parties, and translation, including partial, without written authorization from Automobili Lamborghini S.p.A.

- Gearbox cover removed **(030103)**.
- Oil pump removed **(031503)**.
- Pump side main shaft and countershaft bearings locked with a safety washer **(030103)**.

Disassembling the rods

1. Remove the rod retaining balls (**A-Fig.4**) and springs (**B-Fig.4**).

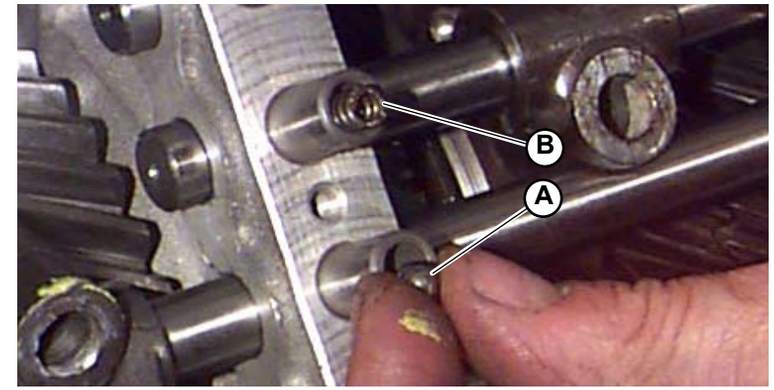

Fig.4

2. Loosen the gear shift fork screws.

3. Loosen the gear shift tooth screws (**C-Fig.5**).

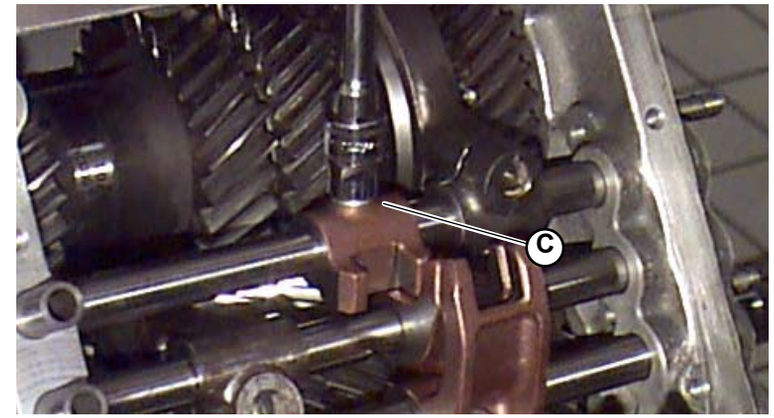

Fig.5

® Automobili Lamborghini S.p.A.
The information and procedures published below are strictly confidential and exclusively for the Lamborghini Dealer Network and Authorized Service Points. All copyrights are property of Automobili Lamborghini S.p.A based on copyright law. All of the PDF chapters in the WEB workshop manuals described below are based on information available at the time of publication. The company reserves the right to make updates and modifications. The following are prohibited: reprinting, reproduction, forwarding to unauthorized people and/or third parties, and translation, including partial, without written authorization from Automobili Lamborghini S.p.A.

4. Remove the reverse gear control rod.

5. Remove the dowel (**D-Fig.6**).

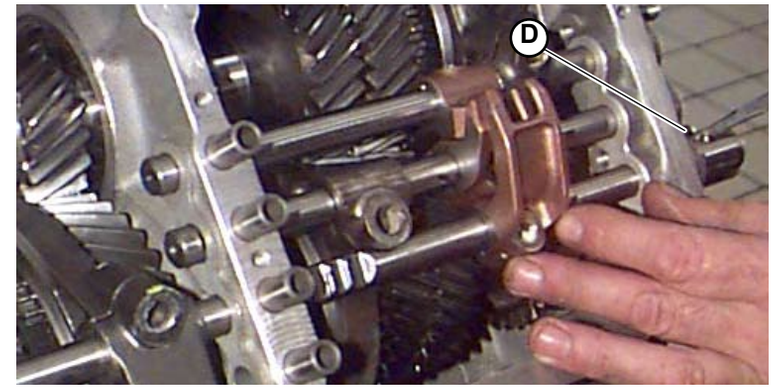

Fig.6

6. Remove the 1st/2nd control rod and remove the pin from the rod.

7. Remove the dowel (**E-Fig.7**).

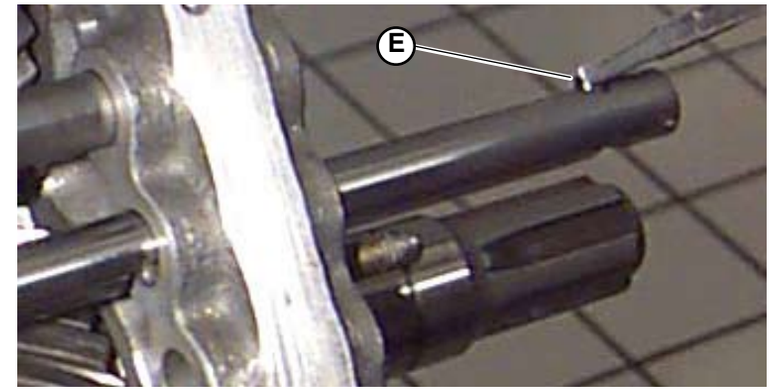

Fig.7

8. Remove the 3rd/4th control rod and remove the pin from the rod (**F-Fig.8**).

9. Remove the dowel (**G-Fig.8**).

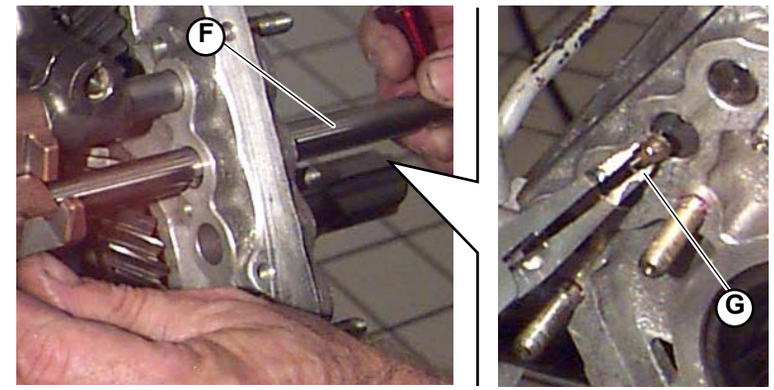

Fig.8

® Automobili Lamborghini S.p.A.
The information and procedures published below are strictly confidential and exclusively for the Lamborghini Dealer Network and Authorized Service Points. All copyrights are property of Automobili Lamborghini S.p.A based on copyright law. All of the PDF chapters in the WEB workshop manuals described below are based on information available at the time of publication. The company reserves the right to make updates and modifications. The following are prohibited: reprinting, reproduction, forwarding to unauthorized people and/or third parties, and translation, including partial, without written authorization from Automobili Lamborghini S.p.A.

10. Remove the 5th/6th control rod (**H-Fig.9**).

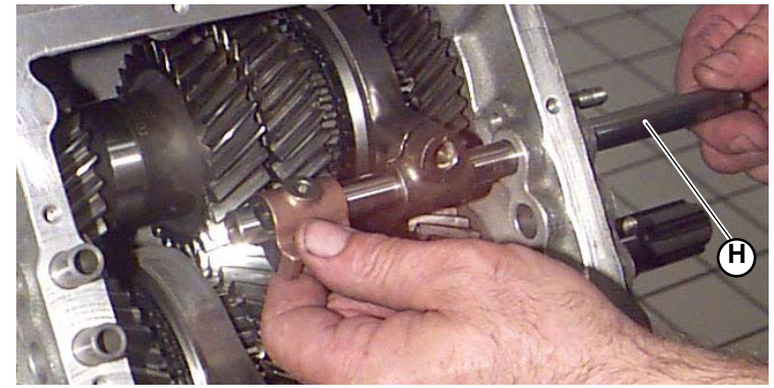

Fig.9

11. Remove the forks from their synchronizers (**Fig.10**).

12. Check for rod notches or burrs which can affect the correct slide; check for retaining spring integrity.

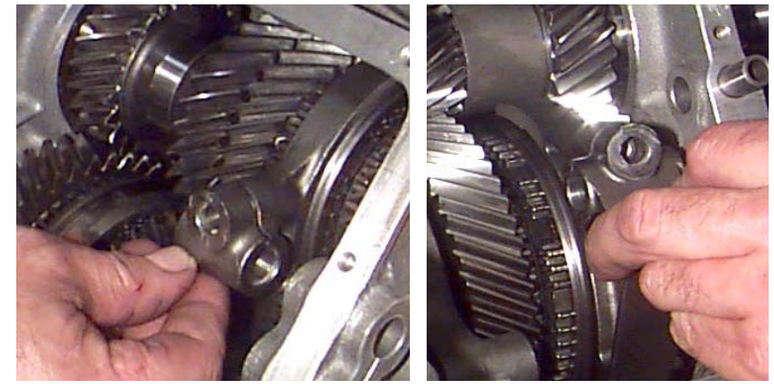

Fig.10

® Automobili Lamborghini S.p.A.
The information and procedures published below are strictly confidential and exclusively for the Lamborghini Dealer Network and Authorized Service Points. All copyrights are property of Automobili Lamborghini S.p.A based on copyright law. All of the PDF chapters in the WEB workshop manuals described below are based on information available at the time of publication. The company reserves the right to make updates and modifications. The following are prohibited: reprinting, reproduction, forwarding to unauthorized people and/or third parties, and translation, including partial, without written authorization from Automobili Lamborghini S.p.A.

Rods assembly

1. Introduce the forks in their synchronizers.(**Fig.1**).

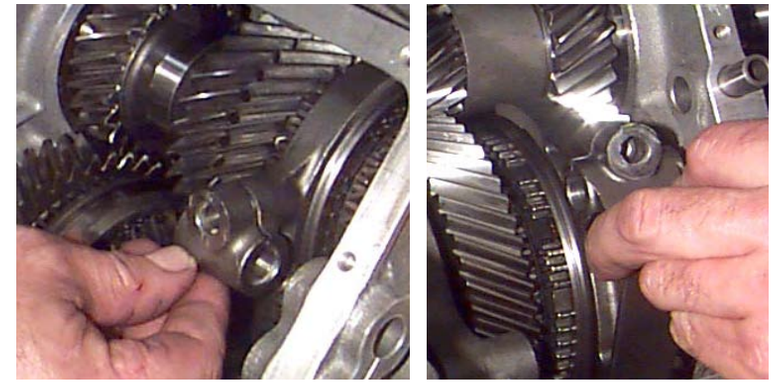

Fig.1

2. 5th/ 6th gear control rod:

- Introduce the 5th/6th rod in the gearbox and in the 5th/6th fork; introduce the 5th/6th tooth on the rod (this is the reference of all the gearbox) and then introduce the rod completely (**A-Fig.2**).

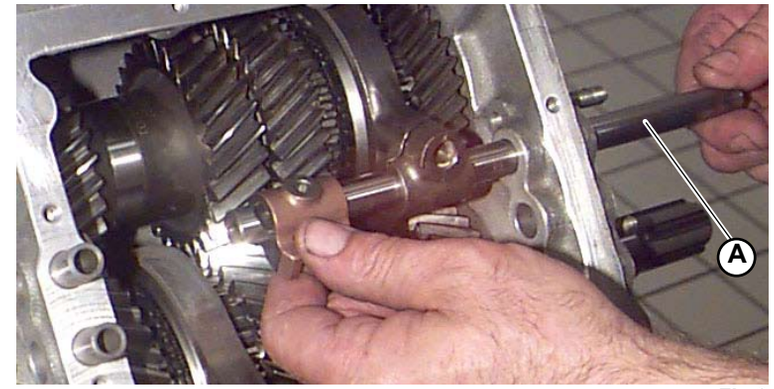

Fig.2

® Automobili Lamborghini S.p.A.
The information and procedures published below are strictly confidential and exclusively for the Lamborghini Dealer Network and Authorized Service Points. All copyrights are property of Automobili Lamborghini S.p.A based on copyright law. All of the PDF chapters in the WEB workshop manuals described below are based on information available at the time of publication. The company reserves the right to make updates and modifications. The following are prohibited: reprinting, reproduction, forwarding to unauthorized people and/or third parties, and translation, including partial, without written authorization from Automobili Lamborghini S.p.A.

3. Turn the 5th/6th rod until the notch on the rod right side is aligned with the notch on the gearbox right side (the two notches must be perfectly aligned).

WARNING
All the control rods must be positioned so that the notch on their right side is aligned with the notch on the gearbox right side;

4. 3rd/4th gear control rod:
- Introduce the dowel in the orthogonal hole towards the 5th/6th gear through the gearbox 3rd/4th control rod seat (**B-Fig.3**).

NOTE
Apply grease on the dowel to keep it in the correct position until the 3rd/4th rod is introduced.

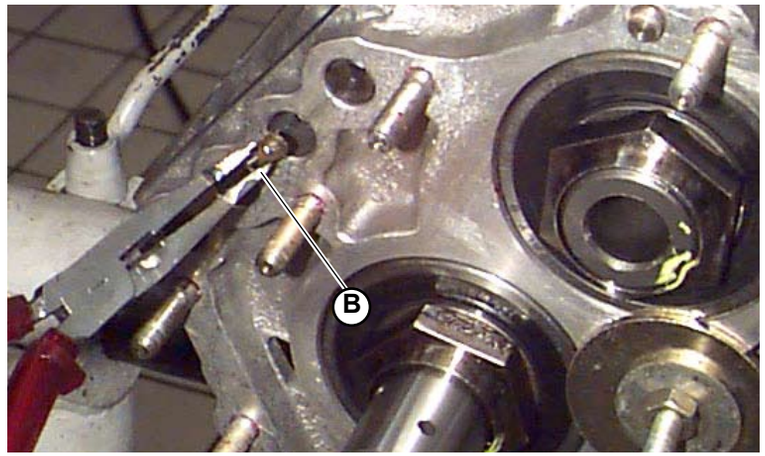

Fig.3

® Automobili Lamborghini S.p.A.
The information and procedures published below are strictly confidential and exclusively for the Lamborghini Dealer Network and Authorized Service Points. All copyrights are property of Automobili Lamborghini S.p.A based on copyright law. All of the PDF chapters in the WEB workshop manuals described below are based on information available at the time of publication. The company reserves the right to make updates and modifications. The following are prohibited: reprinting, reproduction, forwarding to unauthorized people and/or third parties, and translation, including partial, without written authorization from Automobili Lamborghini S.p.A.

5. Introduce the 3rd/4th control rod in the gearbox (**C-Fig.4**) installing its tooth and engaging its 3rd/4th gear shift fork.

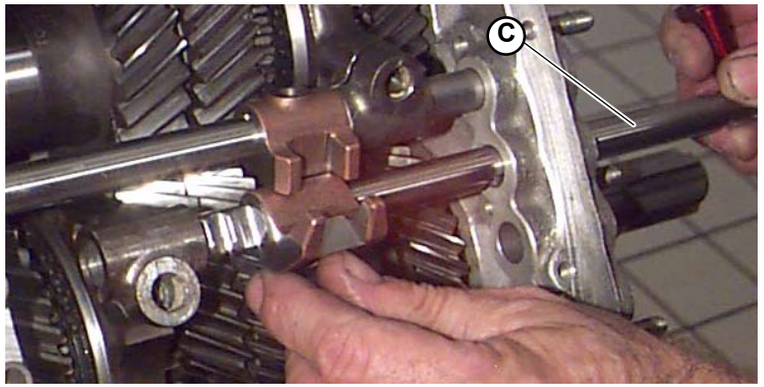

Fig.4

6. Install the pin in the 3rd/4th rod seat and then introduce the rod completely.

7. 1st/2nd gear control rod:
- Introduce the dowel in the orthogonal hole towards the 3rd/4th gear through the gearbox 1st/2nd control rod seat (**D-Fig.5**).

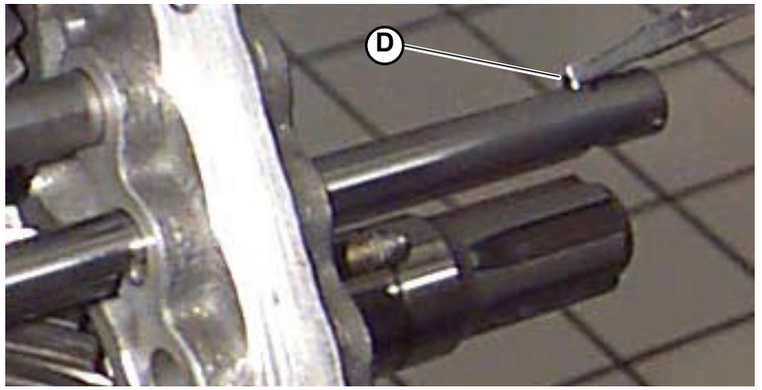

Fig.5

® Automobili Lamborghini S.p.A.
The information and procedures published below are strictly confidential and exclusively for the Lamborghini Dealer Network and Authorized Service Points. All copyrights are property of Automobili Lamborghini S.p.A based on copyright law. All of the PDF chapters in the WEB workshop manuals described below are based on information available at the time of publication. The company reserves the right to make updates and modifications. The following are prohibited: reprinting, reproduction, forwarding to unauthorized people and/or third parties, and translation, including partial, without written authorization from Automobili Lamborghini S.p.A.

NOTE
Apply grease on the dowel to keep it in the correct position until the 1st/2nd rod is introduced.

8. Introduce the 1st/2nd control rod in the gearbox installing its tooth and engaging its 1st/ 2nd gear shift fork
9. Install the pin in the 1st/2nd rod seat and then introduce the rod completely (**Fig.6**).

10. Reverse gear control rod
- Introduce the dowel in the orthogonal hole towards the 1st/2nd gear through the gearbox 1st/reverse gear control rod seat (**Fig.6**).

NOTE
Apply grease on the dowel to keep it in the correct position until the reverse gear rod is introduced.

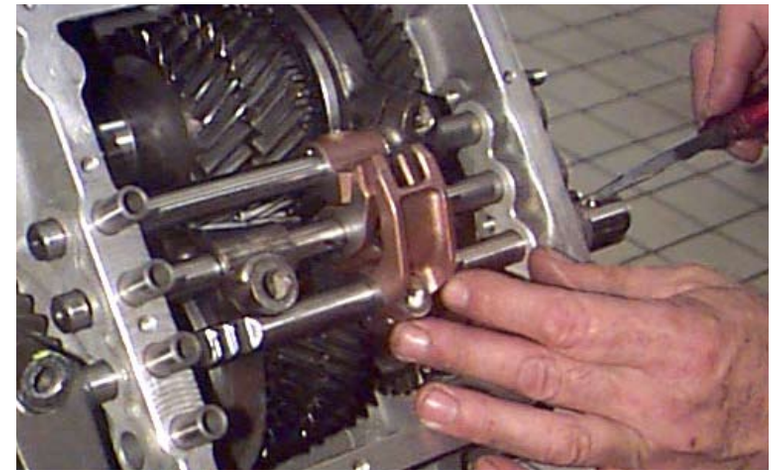

Fig.6

11. Introduce the reverse gear control rod in the gearbox installing its tooth and engaging its 1st/2nd gear shift fork.
12. Once the control rods have been introduced the gearbox is as shown in the figure (**Fig.7**).

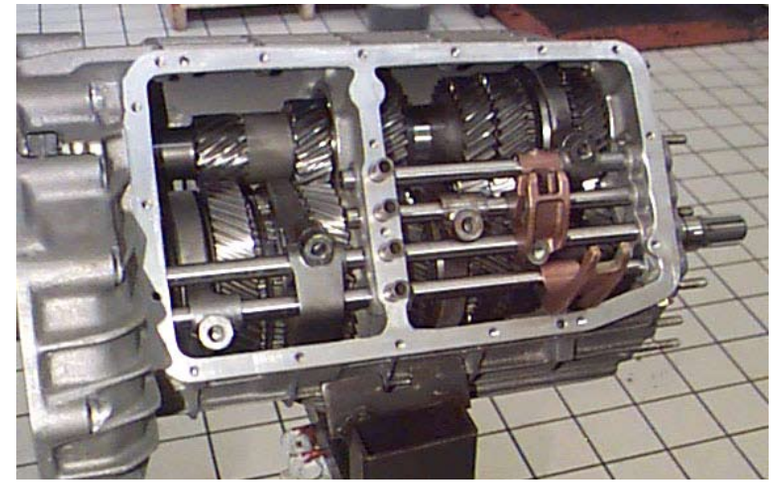

Fig.7

® Automobili Lamborghini S.p.A.
The information and procedures published below are strictly confidential and exclusively for the Lamborghini Dealer Network and Authorized Service Points. All copyrights are property of Automobili Lamborghini S.p.A based on copyright law. All of the PDF chapters in the WEB workshop manuals described below are based on information available at the time of publication. The company reserves the right to make updates and modifications. The following are prohibited: reprinting, reproduction, forwarding to unauthorized people and/or third parties, and translation, including partial, without written authorization from Automobili Lamborghini S.p.A.

13. Fasten the reverse gear control tooth (reference) by means of a screw applied with medium strength thread stop (**E-Fig.8**); tighten to the prescribed torque:
Tooth screws; **tightening torque (000800-3a)**

NOTE
The 5th/6th control tooth, being a reference, is fastened by means of a screw engaged in the control rod, too.

14. Introduce the rod retaining balls in the cover (**F-Fig.9**).
15. Introduce the rod retaining springs in the cover (**G-Fig.9**).
16. Adjust the gear shift inner devices **(030802)**.

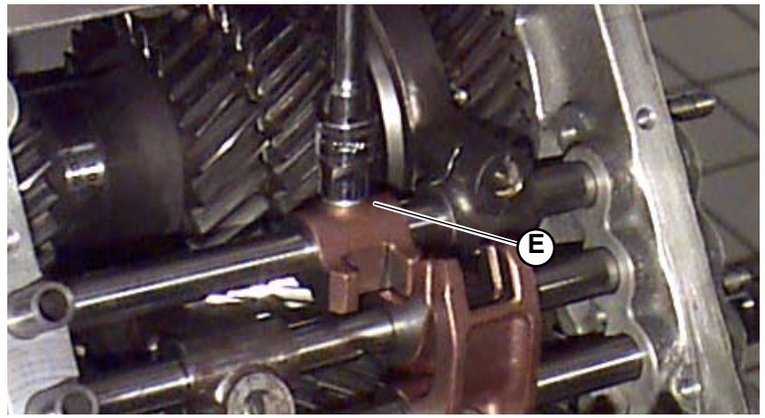

Fig.8

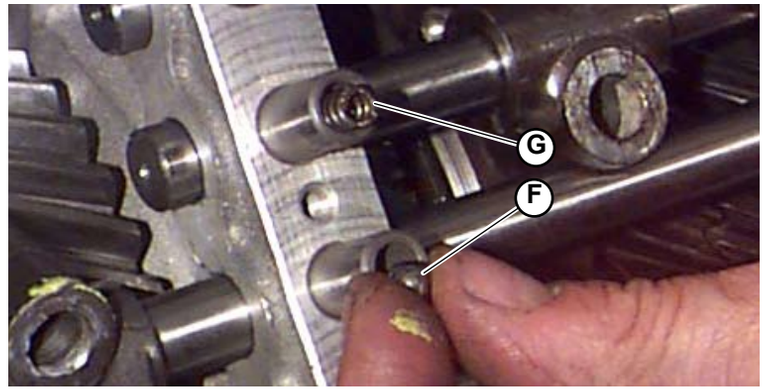

Fig.9

® Automobili Lamborghini S.p.A.
The information and procedures published below are strictly confidential and exclusively for the Lamborghini Dealer Network and Authorized Service Points. All copyrights are property of Automobili Lamborghini S.p.A based on copyright law. All of the PDF chapters in the WEB workshop manuals described below are based on information available at the time of publication. The company reserves the right to make updates and modifications. The following are prohibited: reprinting, reproduction, forwarding to unauthorized people and/or third parties, and translation, including partial, without written authorization from Automobili Lamborghini S.p.A.

- Position the shift lever device support on the gearbox oil pump silentblock inserting suitable washers (**Fig.10**).

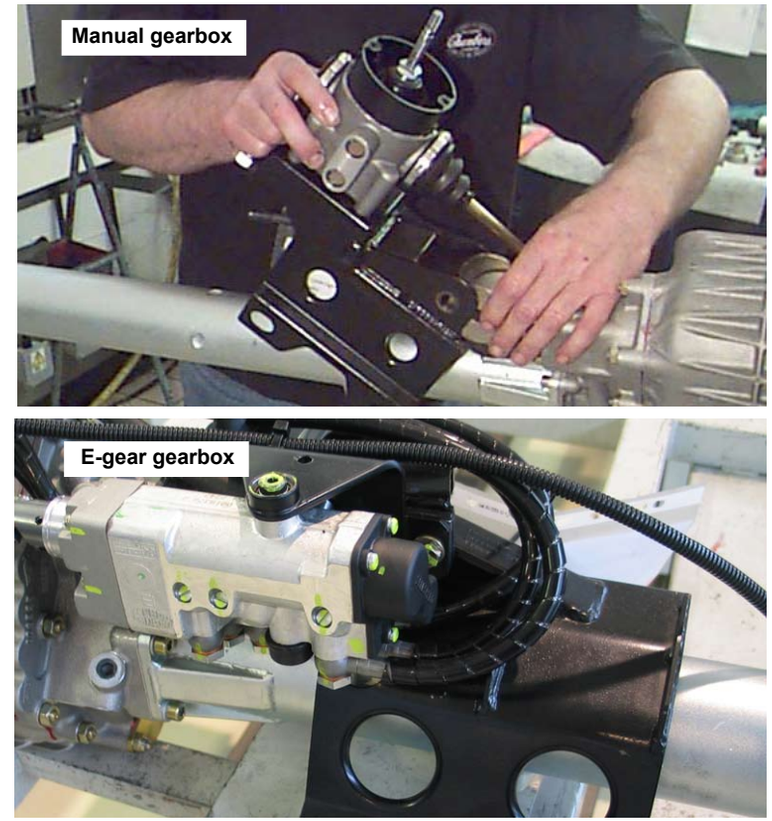

Fig.10

- Keeping the shift lever device support holes (**B-Fig.11**) aligned with the silentblock (**E-Fig.11**) and washer (**D-Fig.11**) central hole, introduce the bolt (**C-Fig.11**) and screw the selflocking nut (**A-Fig.11**); tighten to the prescribed torque:
  Shift lever device support mounting screws; **tightening torque (000800-3c)**

- Install, if necessary, the shift lever device mounting bracket P/N 62495071 on the propeller shaft pipe .

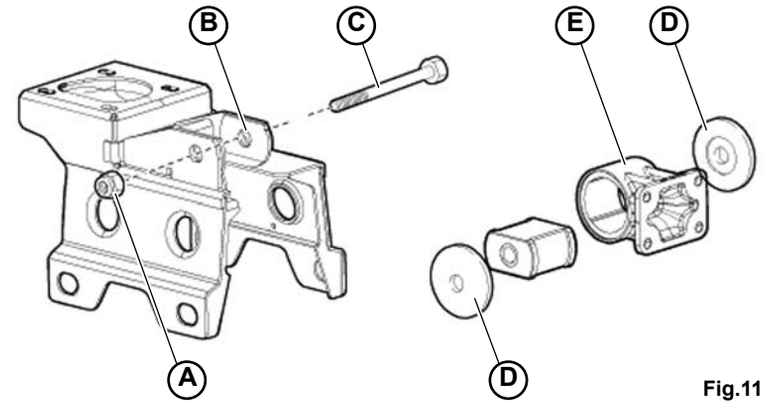

Fig.11

® Automobili Lamborghini S.p.A.
The information and procedures published below are strictly confidential and exclusively for the Lamborghini Dealer Network and Authorized Service Points. All copyrights are property of Automobili Lamborghini S.p.A based on copyright law. All of the PDF chapters in the WEB workshop manuals described below are based on information available at the time of publication. The company reserves the right to make updates and modifications. The following are prohibited: reprinting, reproduction, forwarding to unauthorized people and/or third parties, and translation, including partial, without written authorization from Automobili Lamborghini S.p.A.

- Fasten the shift lever device on the support by means of screws (**Fig.12**); tighten to the prescribed torque:
  Shift lever device mounting screws; **tightening torque (000800-8d)**

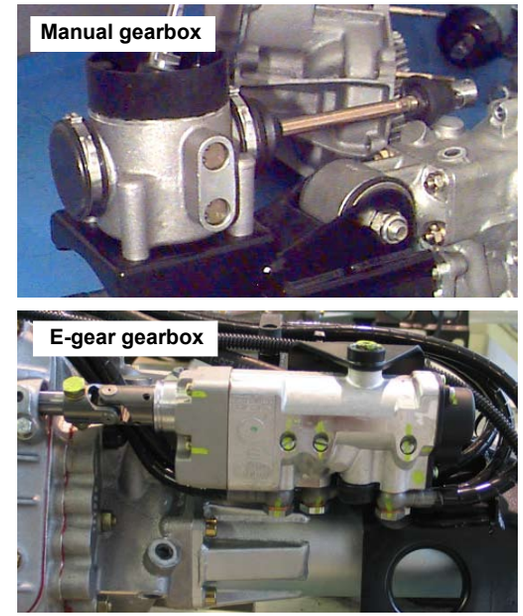

Fig.12

- Introduce the connecting pin between the gear control rod on the gearbox and the shift lever device output rod by tapping with a hammer (**A-Fig.13**).
- Make the gear shift control rod joint boot slide towards the gearbox.
- Calibrate the shift lever device position.

Only for E-gear version:

When the operation has been completed, externally connect the gear and run the software's measurement files:
- **Run the open solenoid file to bleed and reset the system.**
- **Run self-learning to automatically calibrate the system.**

CAUTION:
Before running the measurement files:
- **Disconnect the injection control units.**
- **Remove the fuel pump fuses.**
- **Check that there are no loose positives that could cause short circuits.**

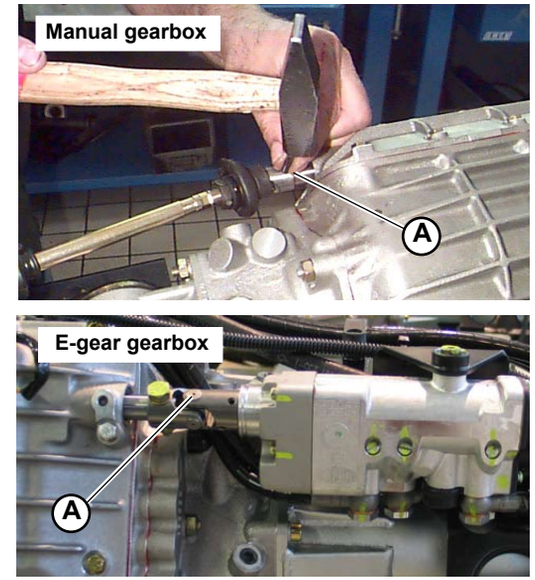

Fig.13

® Automobili Lamborghini S.p.A.
The information and procedures published below are strictly confidential and exclusively for the Lamborghini Dealer Network and Authorized Service Points. All copyrights are property of Automobili Lamborghini S.p.A based on copyright law. All of the PDF chapters in the WEB workshop manuals described below are based on information available at the time of publication. The company reserves the right to make updates and modifications. The following are prohibited: reprinting, reproduction, forwarding to unauthorized people and/or third parties, and translation, including partial, without written authorization from Automobili Lamborghini S.p.A.

Selespeed sensor disassembly

Preliminary operations

- Disassemble the gearbox **(030103)**.

Disassembling the selespeed sensor

1. Remove the Selespeed sensor guard, unscrewing the relative mounting screw.
2. Unscrew the 4 screws **(A-Fig.1)** securing the Selespeed sensors.
3. Rotate the sensors counter-clockwise **(Fig.1).**
4. Remove the sensor **(B-Fig.2)** from the respective housing **(C-Fig.2).**
5. Remove the sensor **(D-Fig.2)** from the respective housing **(E-Fig.2).**
6. Disconnect the wires **(F-Fig.2).**

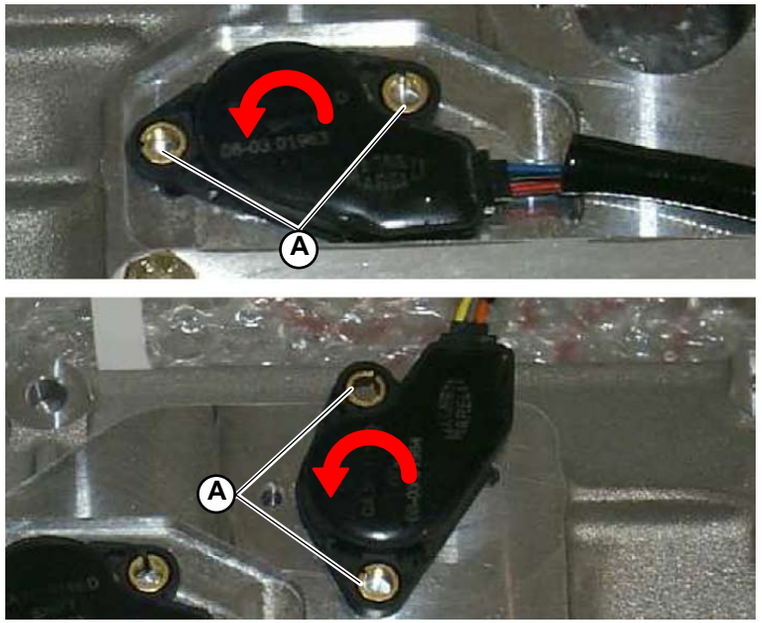

Fig.1

Fig.2

® Automobili Lamborghini S.p.A.
The information and procedures published below are strictly confidential and exclusively for the Lamborghini Dealer Network and Authorized Service Points. All copyrights are property of Automobili Lamborghini S.p.A based on copyright law. All of the PDF chapters in the WEB workshop manuals described below are based on information available at the time of publication. The company reserves the right to make updates and modifications. The following are prohibited: reprinting, reproduction, forwarding to unauthorized people and/or third parties, and translation, including partial, without written authorization from Automobili Lamborghini S.p.A.

Selespeed sensor disassembly

STOP The control rod (A-Fig.1) on the gearbox cover must remain rotated as shown in Fig.1.

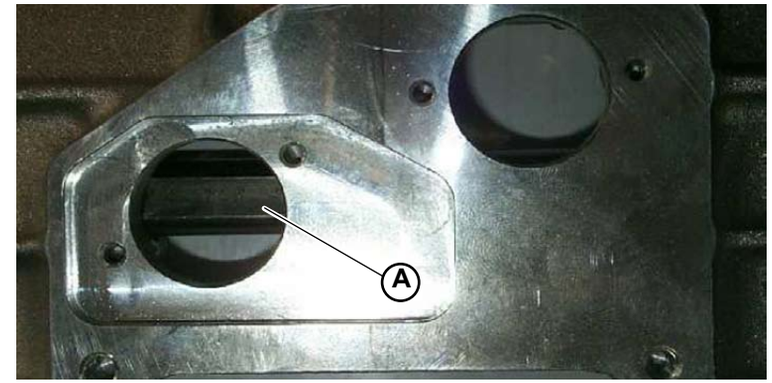

Fig.1

1. Assemble the sensor **(B-Fig.2)** in the respective housing **(C-Fig.2)**, keeping the control rod rotated as shown in Fig.1.
2. Remove the sensor **(D-Fig.2)** from the respective housing **(E-Fig.2).**
3. Connect the wires **(F-Fig.2).**

Fig.2

® Automobili Lamborghini S.p.A.
The information and procedures published below are strictly confidential and exclusively for the Lamborghini Dealer Network and Authorized Service Points. All copyrights are property of Automobili Lamborghini S.p.A based on copyright law. All of the PDF chapters in the WEB workshop manuals described below are based on information available at the time of publication. The company reserves the right to make updates and modifications. The following are prohibited: reprinting, reproduction, forwarding to unauthorized people and/or third parties, and translation, including partial, without written authorization from Automobili Lamborghini S.p.A.

4. Rotate the sensor clockwise **(Fig.3)** to secure the rod, aligning the sensors with the threaded mounting holes.

5. Secure the sensors with the screws **(G-Fig.3).**

6. Position the Selespeed sensor guard and lock it into place using the relative mounting screw.

- Assemble the gearbox **(030105)**.

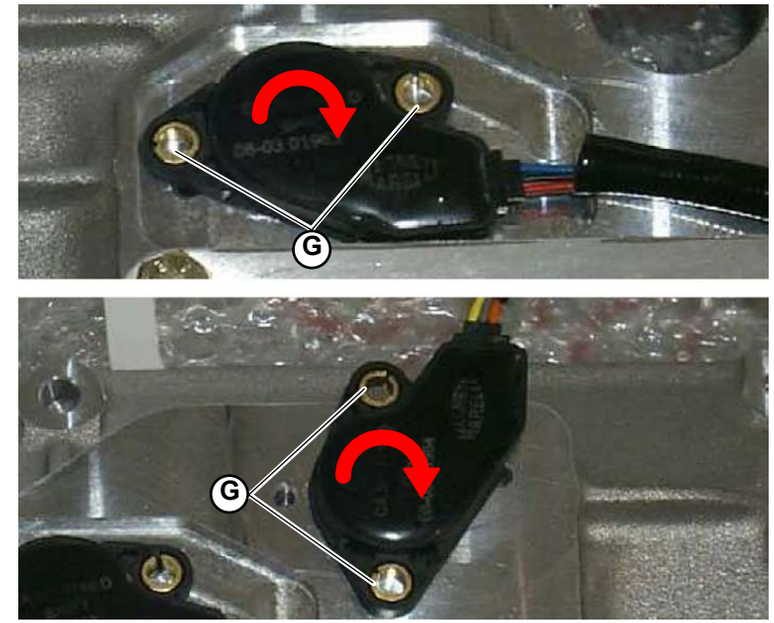

Fig.3

® Automobili Lamborghini S.p.A.
The information and procedures published below are strictly confidential and exclusively for the Lamborghini Dealer Network and Authorized Service Points. All copyrights are property of Automobili Lamborghini S.p.A based on copyright law. All of the PDF chapters in the WEB workshop manuals described below are based on information available at the time of publication. The company reserves the right to make updates and modifications. The following are prohibited: reprinting, reproduction, forwarding to unauthorized people and/or third parties, and translation, including partial, without written authorization from Automobili Lamborghini S.p.A.

This section explains how to disassemble:

A) Gearbox oil filter disassembly
B) Oil pump disassembly

A) Gearbox oil filter disassembly

Preliminary operations

- Lift the vehicle on the car lift **(000000)**.
- Drain the gearbox oil **(030107)**.

Filter disassembly

1. Unscrew the screws (**A-Fig.1**).

2. Remove the gearbox oil filter and visually check its condition.

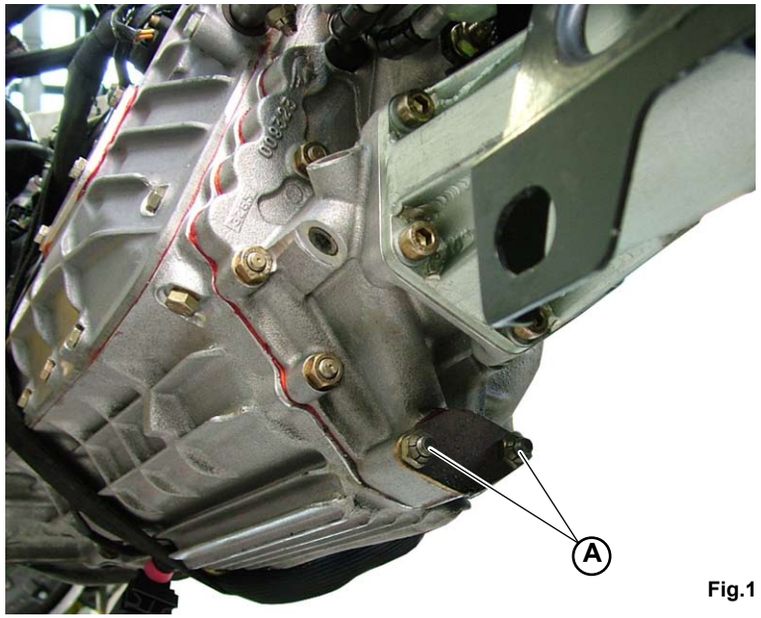

Fig.1

® Automobili Lamborghini S.p.A.
The information and procedures published below are strictly confidential and exclusively for the Lamborghini Dealer Network and Authorized Service Points. All copyrights are property of Automobili Lamborghini S.p.A based on copyright law. All of the PDF chapters in the WEB workshop manuals described below are based on information available at the time of publication. The company reserves the right to make updates and modifications. The following are prohibited: reprinting, reproduction, forwarding to unauthorized people and/or third parties, and translation, including partial, without written authorization from Automobili Lamborghini S.p.A.

B) Oil pump disassembly

NOTE
The oil pump disassemble does not require the front propeller shaft pipe and the shift lever device support removal; in this case, it is necessary to support the pump-bracket-pipe-shift lever device assembly suitably during disassemble.

Manual Gearbox

E-gear Gear-

Preliminary operations

- Remove the oil filter **(Point A)**.

Pump disassembly

1. Unscrew the oil pump mounting screws (**A-Fig.2**) to the gearbox.
2. Tap with a rubber hammer to loosen the pump from the gearbox.
3. In case the gearbox overhauling is not to be carried out, fasten a washer with a suitable diameter to one of the cover stud bolts to keep the pump side main shaft and countershaft roller bearing outer rings into position.
4. Remove the oil distributor sleeve mounting snap ring to the countershaft.

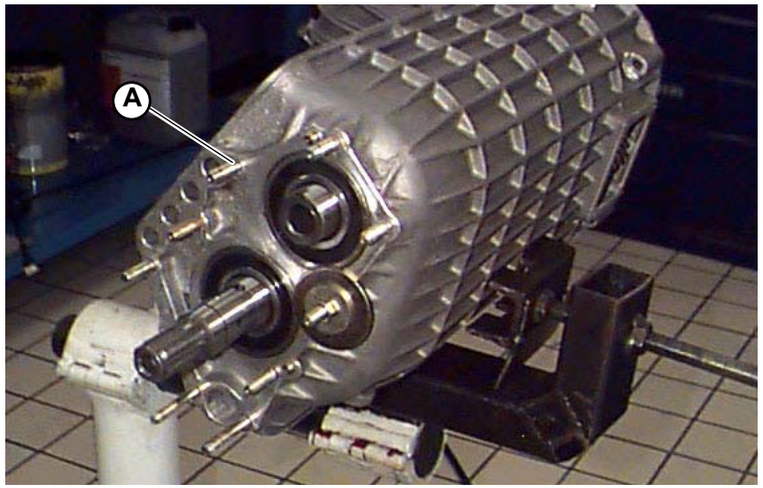

Fig.2

® Automobili Lamborghini S.p.A.
The information and procedures published below are strictly confidential and exclusively for the Lamborghini Dealer Network and Authorized Service Points. All copyrights are property of Automobili Lamborghini S.p.A based on copyright law. All of the PDF chapters in the WEB workshop manuals described below are based on information available at the time of publication. The company reserves the right to make updates and modifications. The following are prohibited: reprinting, reproduction, forwarding to unauthorized people and/or third parties, and translation, including partial, without written authorization from Automobili Lamborghini S.p.A.

How to clean and inspect the gearbox oil filter

NOTE
The gearbox oil filter cleaning procedure is the same for manual gearboxes and e-gears.

- Remove the gearbox oil filter **(031503)**.
- Visually check its condition.
  Clean using compressed air and a dry cloth. If the wire mesh is broken (**A-Fig.1**), replace.
- Once the oil filter has been repositioned in its housing, tighten the screws (**A-Fig. 1**).
  Fixing screws: tightening torque (000800-5d)
- Fill the gearbox oil **(030108)**.

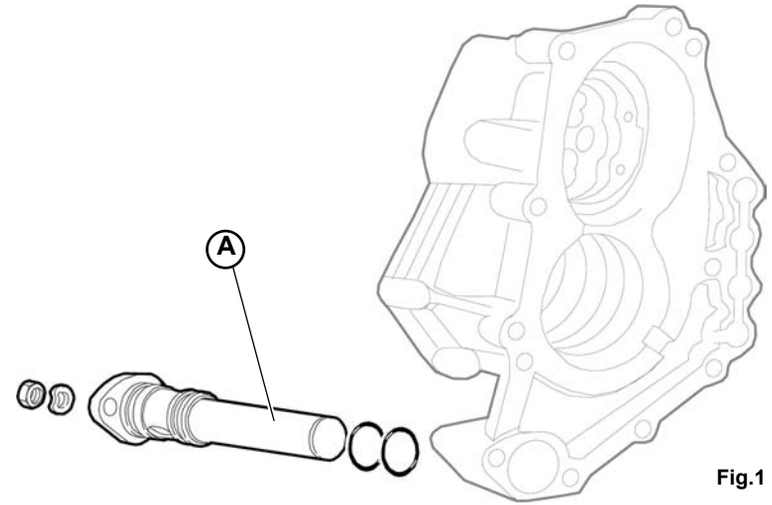

Fig.1

® Automobili Lamborghini S.p.A.
The information and procedures published below are strictly confidential and exclusively for the Lamborghini Dealer Network and Authorized Service Points. All copyrights are property of Automobili Lamborghini S.p.A based on copyright law. All of the PDF chapters in the WEB workshop manuals described below are based on information available at the time of publication. The company reserves the right to make updates and modifications. The following are prohibited: reprinting, reproduction, forwarding to unauthorized people and/or third parties, and translation, including partial, without written authorization from Automobili Lamborghini S.p.A.

This section explains how to assemble:

A) Gearbox oil filter assembly
B) Oil pump assembly

A) Gearbox oil filter assembly

1. Apply Locktite 518 to the oil filter bearing surfaces (**Fig.1**).
2. Install two new seals on the filter (**A-Fig.2**).
3. Introduce the oil filter in its seat, taking care that the notch faces upwards.
4. Once the oil filter has been repositioned in its housing, tighten the screws (**B-Fig.3**).
   Fixing screws: tightening torque (000800-5d)

- Fill the gearbox oil **(030108)**.

Fig.1

Fig.2

Fig.3

® Automobili Lamborghini S.p.A.
The information and procedures published below are strictly confidential and exclusively for the Lamborghini Dealer Network and Authorized Service Points. All copyrights are property of Automobili Lamborghini S.p.A based on copyright law. All of the PDF chapters in the WEB workshop manuals described below are based on information available at the time of publication. The company reserves the right to make updates and modifications. The following are prohibited: reprinting, reproduction, forwarding to unauthorized people and/or third parties, and translation, including partial, without written authorization from Automobili Lamborghini S.p.A.

B) Oil pump assembly

1. Clean and degrease thoroughly the bearing surfaces between the gearbox and the pump; apply Locktite 518 on the areas shown on the oil pump cover and on the gearbox bearing side (**Fig.4**).

Fig.4

2. Supporting the pump properly (in case it is already fastened to a propeller shaft pipe, shift lever device support and shift lever device) engage the pump slowly on the stud bolt actuating, if necessary, the gearbox main shaft in order to make the main shaft inner pin engage in the journal fork of the pump driving gear.

3. Introduce the washers and the nuts to the prescribed torque:
Pump mounting nuts; **tightening torque (000800-3a)**

- Install the oil filter **(Point A)**.

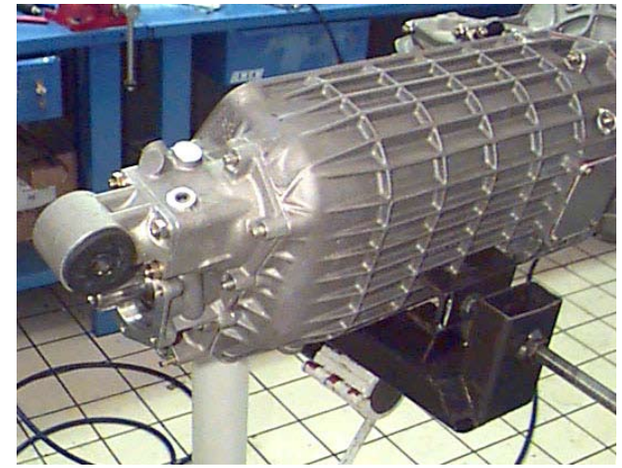

Fig.5

® Automobili Lamborghini S.p.A.
The information and procedures published below are strictly confidential and exclusively for the Lamborghini Dealer Network and Authorized Service Points. All copyrights are property of Automobili Lamborghini S.p.A based on copyright law. All of the PDF chapters in the WEB workshop manuals described below are based on information available at the time of publication. The company reserves the right to make updates and modifications. The following are prohibited: reprinting, reproduction, forwarding to unauthorized people and/or third parties, and translation, including partial, without written authorization from Automobili Lamborghini S.p.A.

OIL PUMP OVERHAUL

STOP **The following procedures can only be completely carried out after removing the pump (031503) from the vehicle.**

- Remove the sleeve by means of a puller and then remove the dowel (**A-Fig.1**) from the countershaft.

NOTE
Mark the dowel position on the countershaft ring nut so that the bushing correct reassemble is made easy.

- Remove the seal from the pump body driving gear journal.

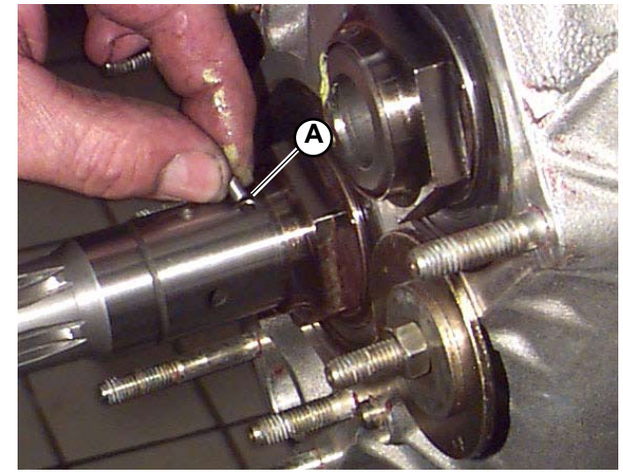

Fig.1

- Unscrew the 4 gear carrier cover mounting screws with washers.
- Remove the gears.
- Clean thoroughly and blow compressed air on all the parts.
- Check the gear conditions and replace if necessary.
- Check the bushing inner surface; if it is scored or excessively worn remove the snap ring and remove the bushing from the pump body by means of a puller.

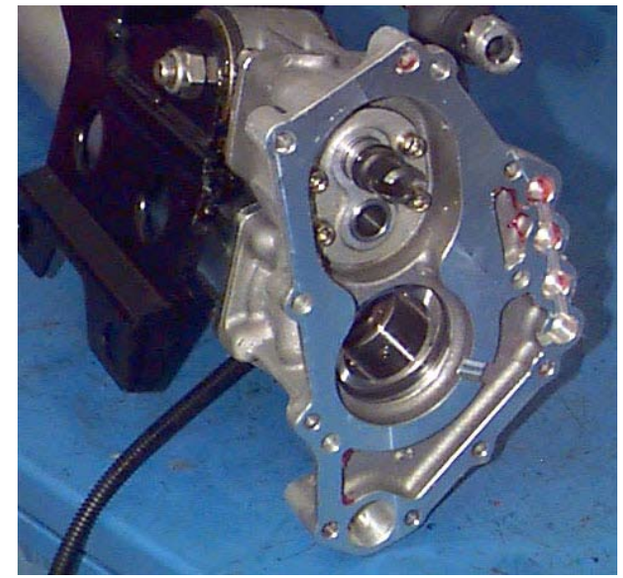

Fig.2

® Automobili Lamborghini S.p.A.
The information and procedures published below are strictly confidential and exclusively for the Lamborghini Dealer Network and Authorized Service Points. All copyrights are property of Automobili Lamborghini S.p.A based on copyright law. All of the PDF chapters in the WEB workshop manuals described below are based on information available at the time of publication. The company reserves the right to make updates and modifications. The following are prohibited: reprinting, reproduction, forwarding to unauthorized people and/or third parties, and translation, including partial, without written authorization from Automobili Lamborghini S.p.A.

- If the bushing has been removed, hot-install a new bushing to the pump cover by means of a suitable pad (**Fig.3**).

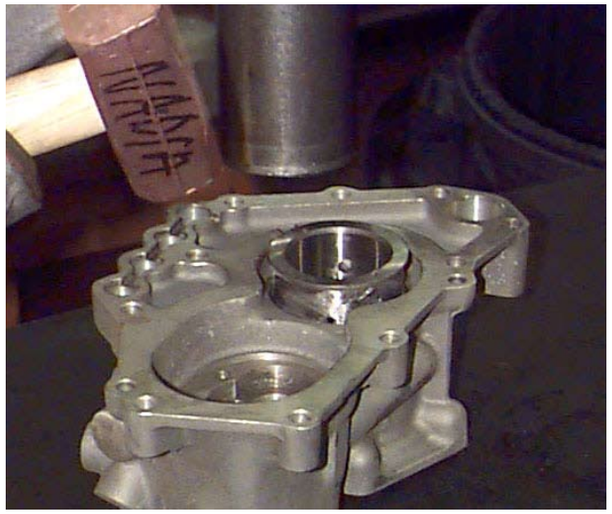

Fig.3

- Lock the bushing into place by means of a snap ring (**Fig.4**).

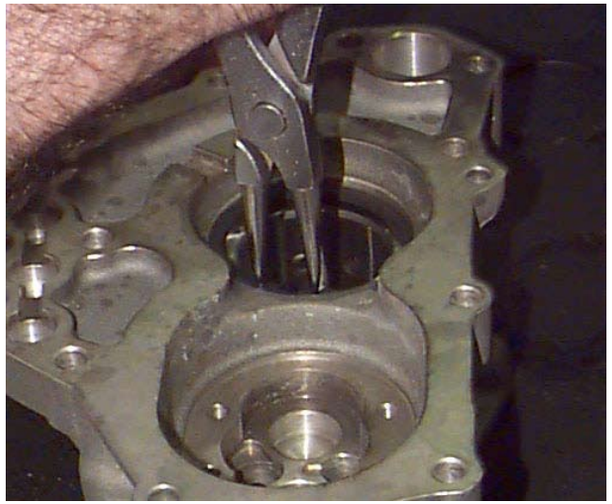

Fig.4

® Automobili Lamborghini S.p.A.
The information and procedures published below are strictly confidential and exclusively for the Lamborghini Dealer Network and Authorized Service Points. All copyrights are property of Automobili Lamborghini S.p.A based on copyright law. All of the PDF chapters in the WEB workshop manuals described below are based on information available at the time of publication. The company reserves the right to make updates and modifications. The following are prohibited: reprinting, reproduction, forwarding to unauthorized people and/or third parties, and translation, including partial, without written authorization from Automobili Lamborghini S.p.A.

- Remove the gears and its cover, tightening the 4 screws by hand as necessary.

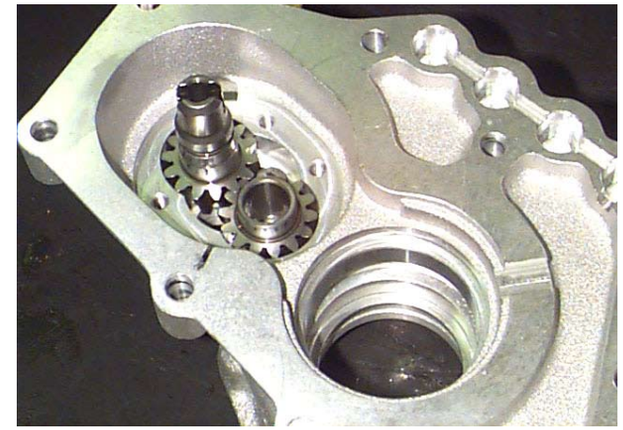

Fig.5

- Install a new seal on the driving gear shaft.

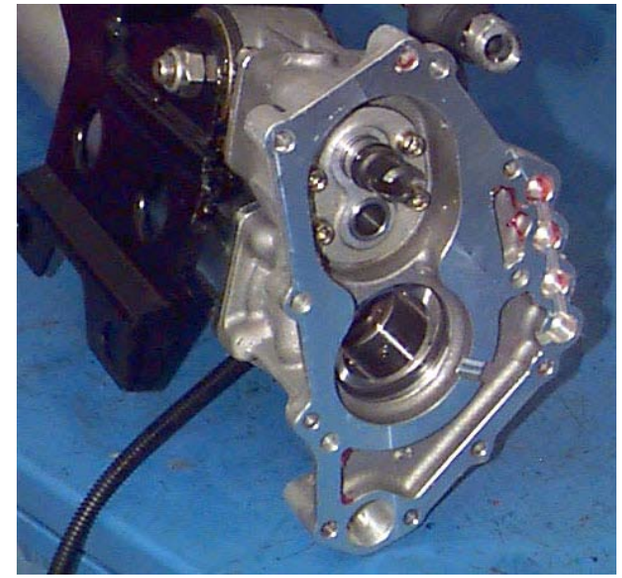

Fig.6

® Automobili Lamborghini S.p.A.
The information and procedures published below are strictly confidential and exclusively for the Lamborghini Dealer Network and Authorized Service Points. All copyrights are property of Automobili Lamborghini S.p.A based on copyright law. All of the PDF chapters in the WEB workshop manuals described below are based on information available at the time of publication. The company reserves the right to make updates and modifications. The following are prohibited: reprinting, reproduction, forwarding to unauthorized people and/or third parties, and translation, including partial, without written authorization from Automobili Lamborghini S.p.A.

- Install a new set of seals (**Fig.7**) on the countershaft bushing.
- After fitting the dowel into place (**Fig.8**), hot-install the bushing on the countershaft (**Fig.9**) taking care to position the notch at the dowel.
- Lock the bushing into place by means of a snap ring (**Fig.10**).

Fig.7

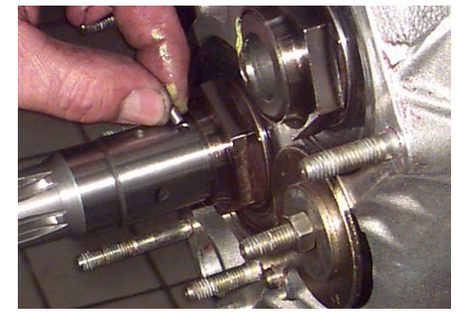

Fig.8

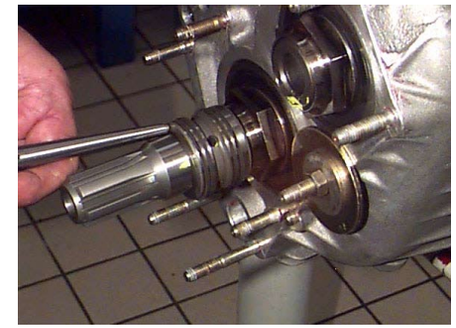

Fig.9

Fig.10

® Automobili Lamborghini S.p.A.
The information and procedures published below are strictly confidential and exclusively for the Lamborghini Dealer Network and Authorized Service Points. All copyrights are property of Automobili Lamborghini S.p.A based on copyright law. All of the PDF chapters in the WEB workshop manuals described below are based on information available at the time of publication. The company reserves the right to make updates and modifications. The following are prohibited: reprinting, reproduction, forwarding to unauthorized people and/or third parties, and translation, including partial, without written authorization from Automobili Lamborghini S.p.A.

Front suspension (Fig.1)	
A.	Hub
B.	Rim plastic cap
C.	Hub housing
D.	Bearing
E.	Articulated joint
F.	Upper arm
G.	Lower arm
H.	Anti-roll bar
I.	Anti-roll bar tie rod
L.	Shock absorber
M.	Height adjustment ring nut and counter ring nut
N.	Axle shaft

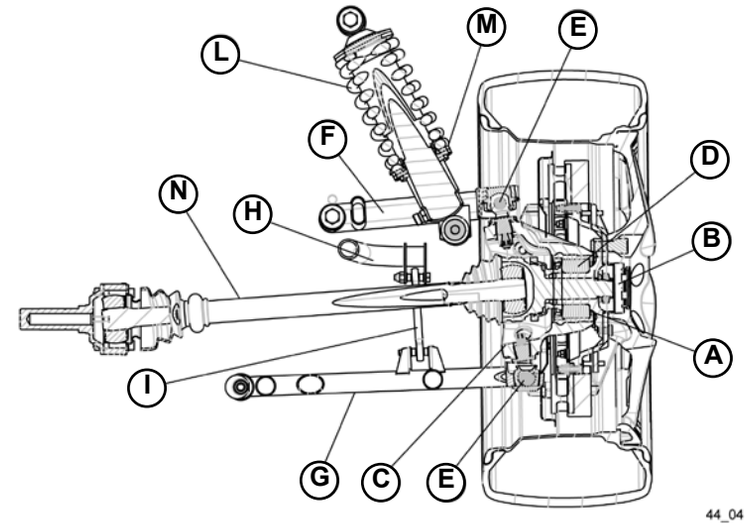

Fig.1

Front caster γ		6° 00’ ÷ 6° 30’
Camber Front α		- 0° 40’ ÷ - 0° 50’
Total toe-in Front t1		0° 0,8’ ÷ 0° 12’
Ride height (*)Front h1		152 ÷ 158
Adjustment shim SP:	005133170	1.0
	005133488	1.5
	005133489	2,0
	005133490	2,5
	005133169	3,0

(*)Measured on the lower surface of the chassis at the suspensions

® Automobili Lamborghini S.p.A.
The information and procedures published below are strictly confidential and exclusively for the Lamborghini Dealer Network and Authorized Service Points. All copyrights are property of Automobili Lamborghini S.p.A based on copyright law. All of the PDF chapters in the WEB workshop manuals described below are based on information available at the time of publication. The company reserves the right to make updates and modifications. The following are prohibited: reprinting, reproduction, forwarding to unauthorized people and/or third parties, and translation, including partial, without written authorization from Automobili Lamborghini S.p.A.

Independent wheel suspensions with tubular steel arms.
Four-link rear suspensions, double wishbone front suspensions.
The FSD shock absorbers vary their rigidity according to the frequency and extension.

“Antidive” configuration in the front due to the inclination of the upper arms to avoid pitching when braking. “Antisquat” in the rear to reduce pitching during acceleration.
Coaxial springs with the shock absorbers, two for each rear wheel and one for each front wheel.
Modular light alloy rims and low profile tires.
Front and rear anti-roll bars.
Front and rear bump stops built in the shock absorbers.

® Automobili Lamborghini S.p.A.
The information and procedures published below are strictly confidential and exclusively for the Lamborghini Dealer Network and Authorized Service Points. All copyrights are property of Automobili Lamborghini S.p.A based on copyright law. All of the PDF chapters in the WEB workshop manuals described below are based on information available at the time of publication. The company reserves the right to make updates and modifications. The following are prohibited: reprinting, reproduction, forwarding to unauthorized people and/or third parties, and translation, including partial, without written authorization from Automobili Lamborghini S.p.A.

Camber

This is the wheel's camber with respect to a plane perpendicular to the ground (**Fig.2**). The camber can be positive (the front view of the vehicle shows the wheels opened upwards) or negative (the wheels are opened downwards). The camber affects roadholding and driving comfort. The adjustment values were designed to obtain the best compromise between roadholding and comfort.

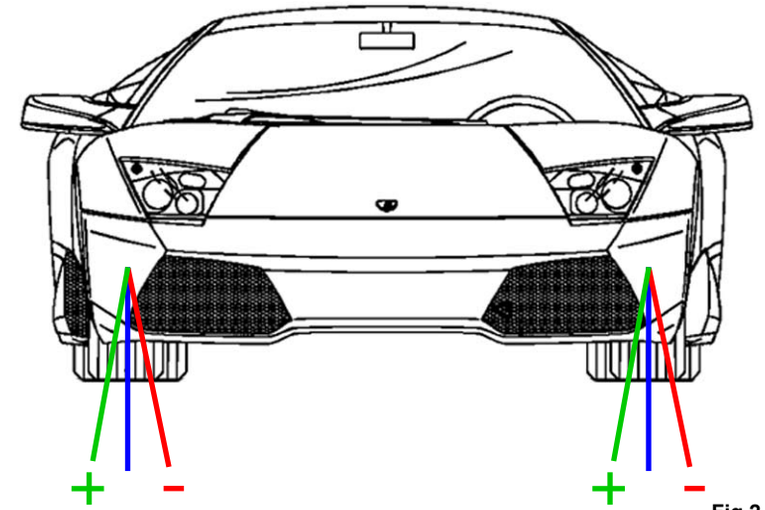

Fig.2

Caster

This is the angle that forms the steering axis of the wheel projected on the longitudinal vertical plane with respect to the transversal vertical plane passing through the wheel axle (**Fig.3**). When this angle is positive, the steering axis meets the ground in front of the vertical axis, thus creating momentum that tends to realign the wheels.

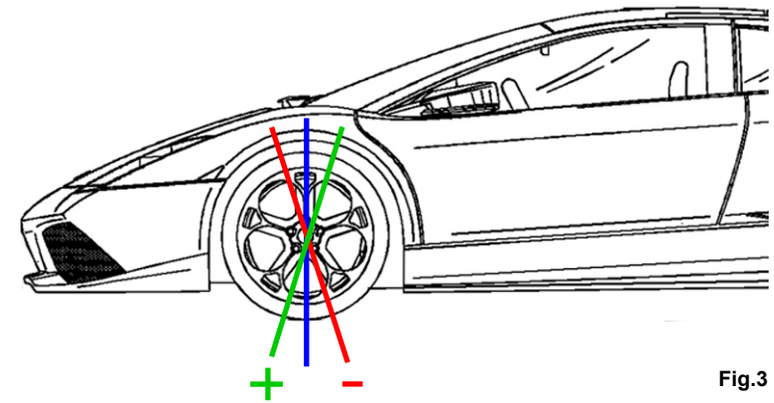

Fig.3

® Automobili Lamborghini S.p.A.
The information and procedures published below are strictly confidential and exclusively for the Lamborghini Dealer Network and Authorized Service Points. All copyrights are property of Automobili Lamborghini S.p.A based on copyright law. All of the PDF chapters in the WEB workshop manuals described below are based on information available at the time of publication. The company reserves the right to make updates and modifications. The following are prohibited: reprinting, reproduction, forwarding to unauthorized people and/or third parties, and translation, including partial, without written authorization from Automobili Lamborghini S.p.A.

Toe-in

This is the angle formed between the equatorial planes of the wheels of an axle and the vertical-longitudinal plane passing through the middle of the vehicle (**Fig.4**). The angle is positive when the directions of the two wheels converge at a point in front of the vehicle. It is negative when this point is behind the vehicle. To improve vehicle stability, wheel toe-in must be kept positive.

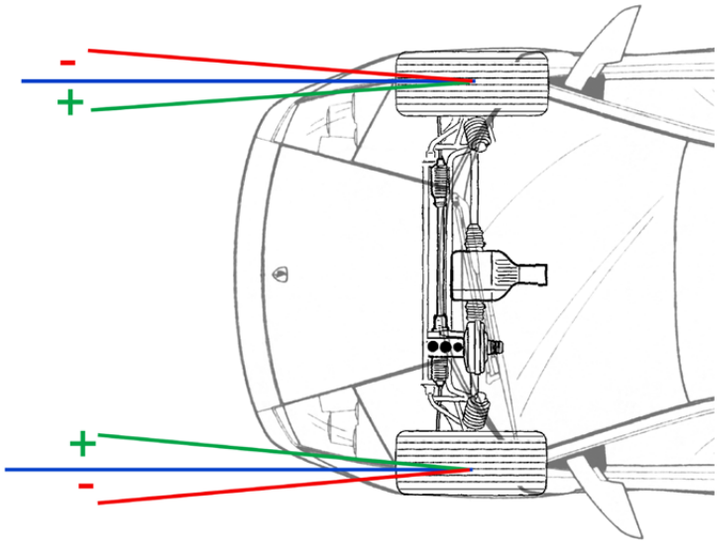

Fig.4

® Automobili Lamborghini S.p.A.
The information and procedures published below are strictly confidential and exclusively for the Lamborghini Dealer Network and Authorized Service Points. All copyrights are property of Automobili Lamborghini S.p.A based on copyright law. All of the PDF chapters in the WEB workshop manuals described below are based on information available at the time of publication. The company reserves the right to make updates and modifications. The following are prohibited: reprinting, reproduction, forwarding to unauthorized people and/or third parties, and translation, including partial, without written authorization from Automobili Lamborghini S.p.A.

Front axle shaft and front differential disassembly

Preliminary operations

- Lift the vehicle on the car lift **(000000)**.
- Disassemble the wheel **(060103)**.

Axle shaft and differential disassembly

1. Disassemble the center screw (**A-Fig.1**) in the center of the disk.
2. Disassemble the differential support plate (**B-Fig.2**) by unscrewing the four mounting screws.
3. Free both front axle shafts from the differential (**C-Fig.2**) by unscrewing the 12 mounting screws (5 socket head screws for each differential-axle shaft coupling).
4. Remove the temperature sensor wire (**D-Fig.2**) from the differential.
5. Using a socket wrench, unscrew the two screws (**E-Fig.2**) that secure the front differential support.
6. Remove the front differential.

CAUTION!

Due to the differential's weight, a spider lift should be used to lower the differential itself to the ground after it has been assembled.
In this case, position the spider lift under the front differential before unscrewing the two support screws (E-Fig.2).

7. Remove the axle shaft.

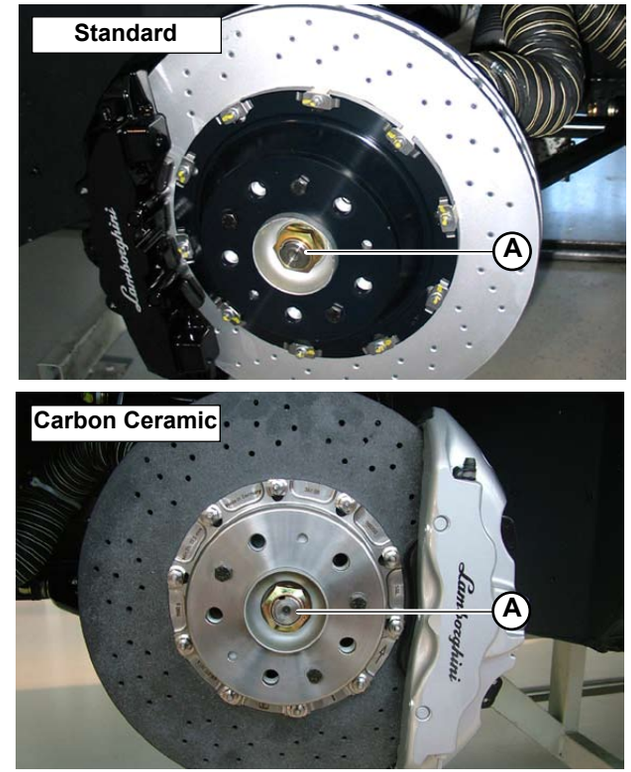

Fig.1

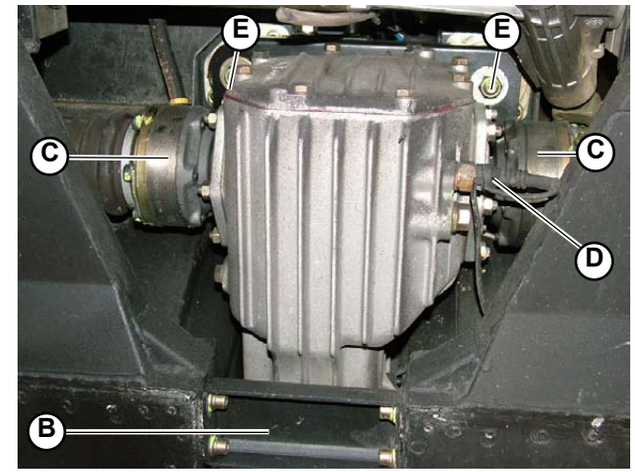

Fig.2

® Automobili Lamborghini S.p.A.
The information and procedures published below are strictly confidential and exclusively for the Lamborghini Dealer Network and Authorized Service Points. All copyrights are property of Automobili Lamborghini S.p.A based on copyright law. All of the PDF chapters in the WEB workshop manuals described below are based on information available at the time of publication. The company reserves the right to make updates and modifications. The following are prohibited: reprinting, reproduction, forwarding to unauthorized people and/or third parties, and translation, including partial, without written authorization from Automobili Lamborghini S.p.A.

Front axle shaft assembly and front differential

1. Position the axle shaft for the subsequent assembly operations.

2. Using a socket wrench, tighten the two screws (**A-Fig.1**) of the front differential support; **tightening torque (000800-26c)**

> **CAUTION!**
>
> **Due to the differential's weight, a spider lift should be used to raise the differential to where it must be anchored.**

3. Attach the temperature sensor wire (**B-Fig.1**) to the differential.

4. Secure both front axle shafts to the differential (**C-Fig.1**) by tightening the 12 mounting screws (6 socket head screws for each differential-axle shaft coupling); **tightening torque (000800-1a)**

5. Assemble the differential support plate (**D-Fig.1**), tightening the four mounting screws.

6. Tighten the screw (**E-Fig.2**) in the center of the disk; **tightening torque (000800-12b)**

- Assemble the wheel **(060105)**.

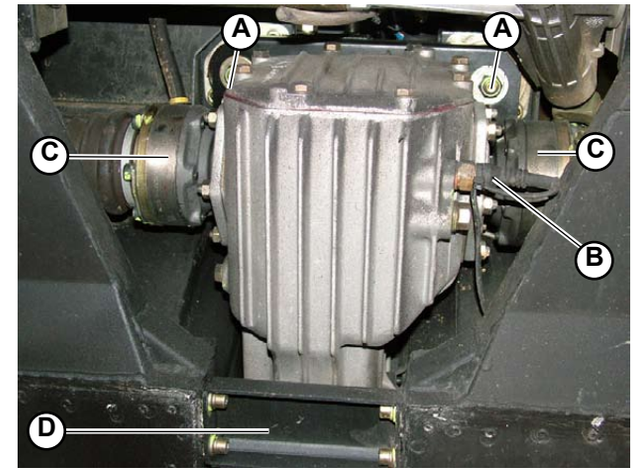

Fig.1

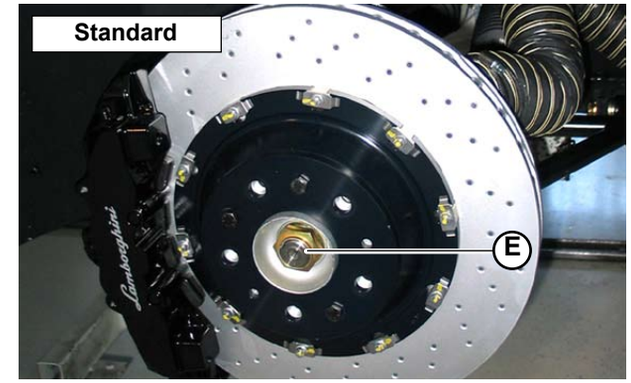

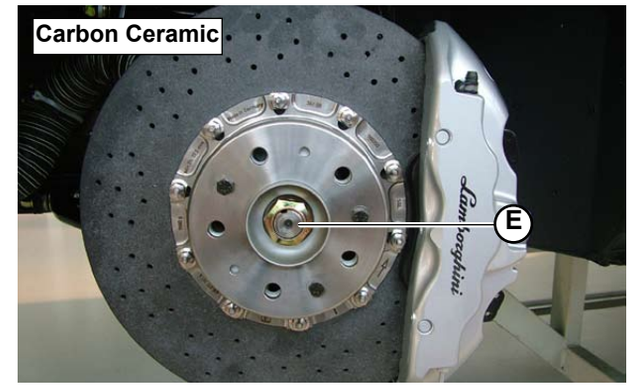

Fig.2

® Automobili Lamborghini S.p.A.
The information and procedures published below are strictly confidential and exclusively for the Lamborghini Dealer Network and Authorized Service Points. All copyrights are property of Automobili Lamborghini S.p.A based on copyright law. All of the PDF chapters in the WEB workshop manuals described below are based on information available at the time of publication. The company reserves the right to make updates and modifications. The following are prohibited: reprinting, reproduction, forwarding to unauthorized people and/or third parties, and translation, including partial, without written authorization from Automobili Lamborghini S.p.A.

Viscous coupling disassembly

Preliminary operations

- Lift the vehicle on the car lift **(000000)**.
- Disassemble the front differential **(040903)**.

Viscous coupling disassembly

1. Unscrew the mounting screws with washers and remove the flange - viscous coupling assembly (**A-Fig.1**).

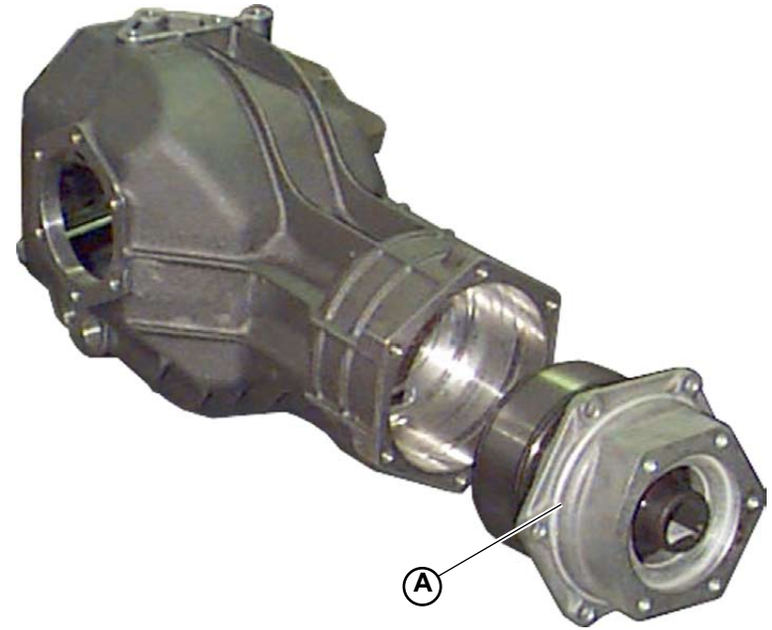

Fig.1

® Automobili Lamborghini S.p.A.
The information and procedures published below are strictly confidential and exclusively for the Lamborghini Dealer Network and Authorized Service Points. All copyrights are property of Automobili Lamborghini S.p.A based on copyright law. All of the PDF chapters in the WEB workshop manuals described below are based on information available at the time of publication. The company reserves the right to make updates and modifications. The following are prohibited: reprinting, reproduction, forwarding to unauthorized people and/or third parties, and translation, including partial, without written authorization from Automobili Lamborghini S.p.A.

Viscous coupling assembly

1. Attach the flange – viscous coupling assembly (**A-Fig.1**) using the relative mounting screws with washers.

- Assemble the front differential **(040905)**.

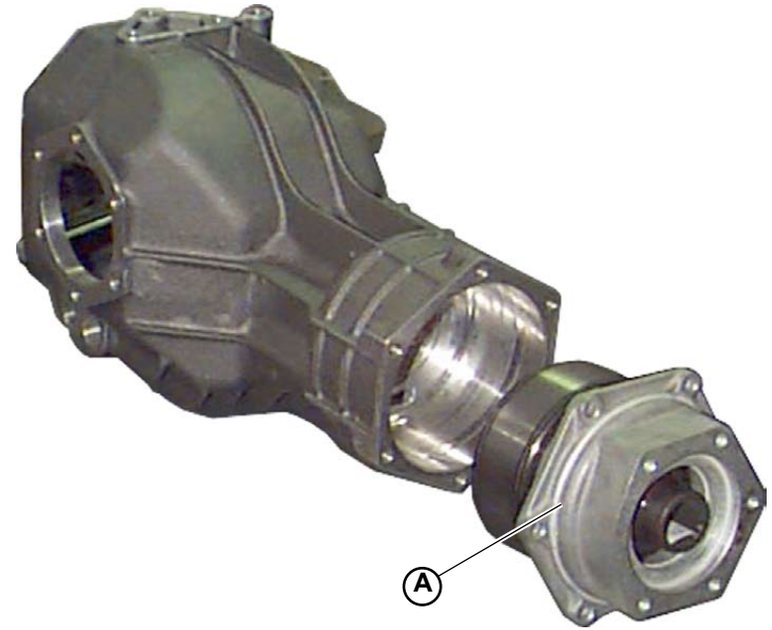

Fig.1

® Automobili Lamborghini S.p.A.
The information and procedures published below are strictly confidential and exclusively for the Lamborghini Dealer Network and Authorized Service Points. All copyrights are property of Automobili Lamborghini S.p.A based on copyright law. All of the PDF chapters in the WEB workshop manuals described below are based on information available at the time of publication. The company reserves the right to make updates and modifications. The following are prohibited: reprinting, reproduction, forwarding to unauthorized people and/or third parties, and translation, including partial, without written authorization from Automobili Lamborghini S.p.A.

Viscous coupling overhaul

- Lock the flange-viscous coupling assembly by means of P/N 62395070 tool and fasten it in a vice (**Fig.1**).
- Remove the oil seal from the flange.
- Straighten the locking ring nut caulking and, by means of P/N 62395059 special tool, remove it.
- Separate the viscous coupling from the flange.

Fig.1

® Automobili Lamborghini S.p.A.
The information and procedures published below are strictly confidential and exclusively for the Lamborghini Dealer Network and Authorized Service Points. All copyrights are property of Automobili Lamborghini S.p.A based on copyright law. All of the PDF chapters in the WEB workshop manuals described below are based on information available at the time of publication. The company reserves the right to make updates and modifications. The following are prohibited: reprinting, reproduction, forwarding to unauthorized people and/or third parties, and translation, including partial, without written authorization from Automobili Lamborghini S.p.A.

- Remove the snap ring (**A-Fig.2**) and, by means of a puller, remove the bearing inner ring (**B-Fig.2**).
- Remove the bearing (**E-Fig.2**) inner ring from the viscous coupling (**C-Fig.2**).
- Remove the snap ring (**D-Fig.2**) from the flange (**F-Fig.2**) and remove the bearing outer ring (**E-Fig.2**).
- Remove the snap ring (**I-Fig.2**) from the differential carrier (**L-Fig.2**); outer ring (**B-Fig.2**) can be removed only after the pinion disassembly.
- Clean accurately all components.
- Check that the bearings are in good conditions, without traces of overheating and that the races, the turning parts or the cages are not damaged.
- Check that the viscous coupling threading and the grooved profiles are not dented or scratched.
- Hot-install the bearing (**B-Fig.2**) inner race on the coupling shaft (**C-Fig.2**) and fasten it by means of the snap ring (**A-Fig.2**).
- Install the bearing (**B-Fig.2**) outer ring in the carrier (**L-Fig.2**) by means of a pad and lock it into its seat by means of a snap ring (**I-Fig.2**).
- Install the bearing (**E-Fig.2**) outer ring in the flange (**F-Fig.2**) by means of a suitable pad and lock it into its seat by means of a snap ring (**D-Fig.2**).
- Lock the flange by means of P/N 62395070 tool, install the flange (**F-Fig.2**) to the viscous coupling (**C-Fig.2**) and lock the ring nut (**H-Fig.2**) by means of P/N 62395059 special tool, tighten to the prescribed tightening torque and use Molycote 1000:
  viscous coupling ring nut; **tightening torque (000800-9b)**
- Caulk the ring nut (**H-Fig.2**).
- Replace the oil seal (**G-Fig.2**) anyway.

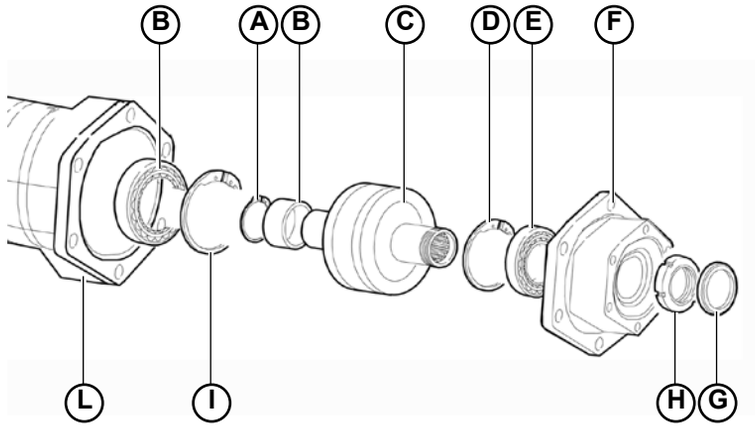

Fig.2

® Automobili Lamborghini S.p.A.
The information and procedures published below are strictly confidential and exclusively for the Lamborghini Dealer Network and Authorized Service Points. All copyrights are property of Automobili Lamborghini S.p.A based on copyright law. All of the PDF chapters in the WEB workshop manuals described below are based on information available at the time of publication. The company reserves the right to make updates and modifications. The following are prohibited: reprinting, reproduction, forwarding to unauthorized people and/or third parties, and translation, including partial, without written authorization from Automobili Lamborghini S.p.A.

Lifting System

This is an hydraulic device enabling to lift the front part of the vehicle when driving at low speed, to allow access to areas with uneven surfaces.
The system is composed of the following components:

- Front shock absorbers;
- Electronic control unit (GFA);
- Ascent or descent control button;
- Connecting hoses and electric wires;

Lifting system layout (Fig.1)	
A.	Front shock absorbers
B.	Electronic control unit (GFA)
C.	Ascent or descent control button
D.	Solenoid valves and pressure switches and flow separator
E.	Power steering fluid reservoir
F.	Hydraulic pump

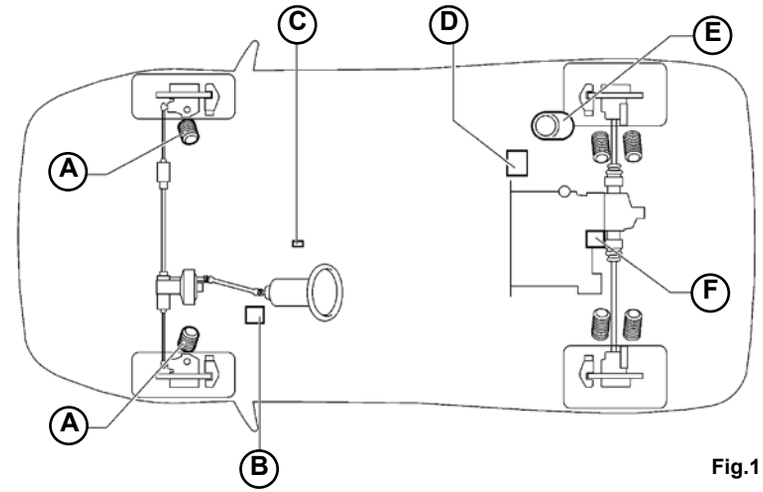

Fig.1

The system can be activated up to the maximum speed of 70 Km/h (30 Km/h for Japan); when it reaches this speed threshold the system will automatically go to the DOWN position.

Moreover the system can recognize the following lifting system errors:

- System pressure indicated simultaneously by two pressure switches as under 20 bars and over 70 bars (one or both pressure switches damaged or disconnected).
- Vehicle ascending or descending time greater than 120 seconds (hydraulic or solenoid valve problem).
- Wrong vehicle speed indication.

The warning light on the dashboard will blink quickly to signal errors (it blinks slowing during raising/lowering).
If problems occur the L.DAS software is used, which checks system errors and proceeds by resetting them.

Zeroing the data automatically resets the errors for diagnosing the lifting system and “Confirmed-Pending errors” (109114). Before resetting all of the parameters should therefore be saved.

® Automobili Lamborghini S.p.A.
The information and procedures published below are strictly confidential and exclusively for the Lamborghini Dealer Network and Authorized Service Points. All copyrights are property of Automobili Lamborghini S.p.A based on copyright law. All of the PDF chapters in the WEB workshop manuals described below are based on information available at the time of publication. The company reserves the right to make updates and modifications. The following are prohibited: reprinting, reproduction, forwarding to unauthorized people and/or third parties, and translation, including partial, without written authorization from Automobili Lamborghini S.p.A.

If an error occurs, the ECU places the system in the DOWN position and the warning light will simultaneously blink quickly on the dashboard.

Lifting system control diagram (Fig.2)	
A.	GFA control unit
B.	Vehicle speed signal
C.	Lifting system button
D.	Lifting system solenoid valves
E.	Lifting system pressure switches
F.	Lifting system warning light
G.	+12 V power supply

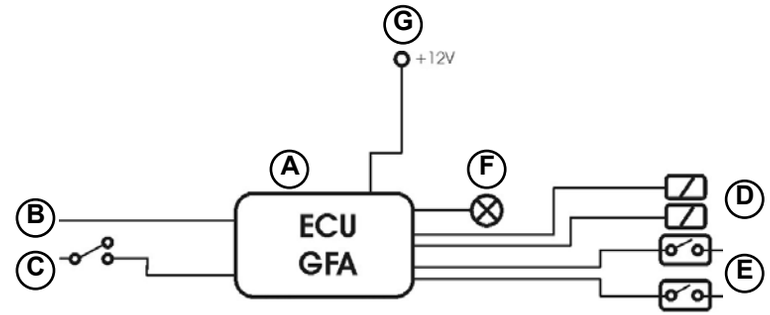

Fig.2

® Automobili Lamborghini S.p.A.
The information and procedures published below are strictly confidential and exclusively for the Lamborghini Dealer Network and Authorized Service Points. All copyrights are property of Automobili Lamborghini S.p.A based on copyright law. All of the PDF chapters in the WEB workshop manuals described below are based on information available at the time of publication. The company reserves the right to make updates and modifications. The following are prohibited: reprinting, reproduction, forwarding to unauthorized people and/or third parties, and translation, including partial, without written authorization from Automobili Lamborghini S.p.A.

- A flow separator that separates the fluid flow between the steering system and lifting system circuits;
- Increased capacity power steering fluid reservoir (1.3 liters);
- Hydraulic pump (it is the same used for power steering systems with capacity suited to the new system);
- Warning light on instrument panel;
- Vehicle speed signal.

Lifting system hydraulic connections (Fig.3)	
1.	Ascent solenoid valve
2.	Descent solenoid valve
3.	Pressure switch
4.	Solenoid valve assembly
5.	Flow separator
6.	Shock absorber lower chamber
P.	From power steering pump
A.	To power steering system
B.	To flow separator
R.	To power steering oil reservoir
O.	To front shock absorbers

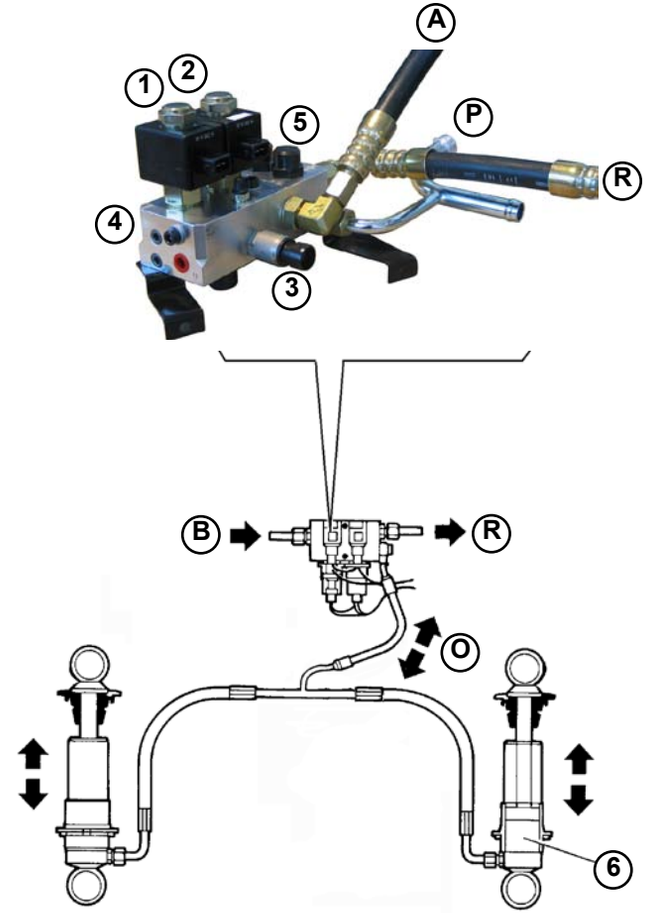

Fig.3

If a malfunction occurs, open the lifting diag window on LDAS32 (109114), and resolve the problem through diagnosis.
The GFA controls this system.

® Automobili Lamborghini S.p.A.
The information and procedures published below are strictly confidential and exclusively for the Lamborghini Dealer Network and Authorized Service Points. All copyrights are property of Automobili Lamborghini S.p.A based on copyright law. All of the PDF chapters in the WEB workshop manuals described below are based on information available at the time of publication. The company reserves the right to make updates and modifications. The following are prohibited: reprinting, reproduction, forwarding to unauthorized people and/or third parties, and translation, including partial, without written authorization from Automobili Lamborghini S.p.A.

Low position hold

The circuits has the following characteristics:
- Solenoid valve (**1-Fig.4**): open;
- Solenoid valve (**2-Fig.4**): open.

In normal conditions, the vehicle front part height is determined by the standard adjustment.
The fluid passes through the solenoid valve (**1-Fig.4**) and is sent to the reservoir.
The pressure inside the system reaches 20 bars and the minimum pressure switch (**3-Fig.4**) opens.
Following occasional pressure increases (e.g. rough road surface), the minimum pressure valve (**6-Fig.4**) opens.
The excess pressure is relieved by means of the solenoid valve (**2-Fig.4**).

Furthermore, the ECU cyclically closes the solenoid valves for short times during vehicle operation (raising condition, see next paragraph) to keep the hydraulic circuit pressure in the range of 20 bars.

Low position hold (Fig.4)	
1.	Ascent solenoid valve
2.	Descent solenoid valve
3.	Minimum pressure switch
4.	Maximum pressure switch
5.	Check valve
6.	Minimum pressure valve
P.	Power steering pump
R.	Reservoir
O.	Front shock absorbers

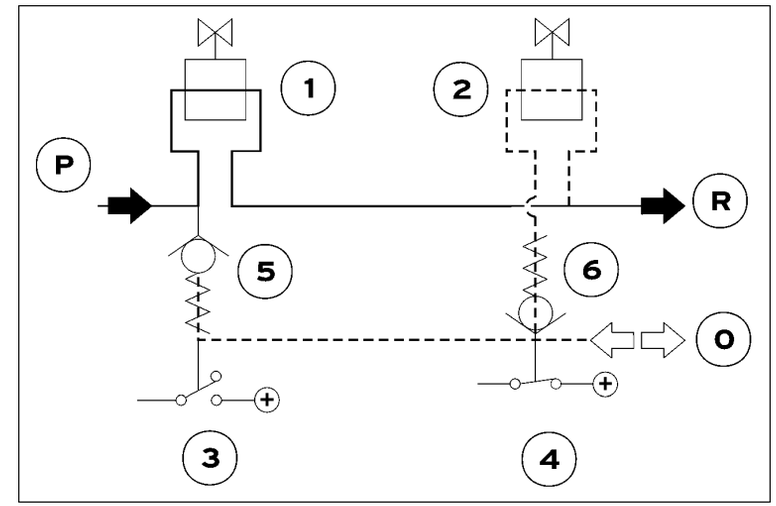

Fig.4

® Automobili Lamborghini S.p.A.
The information and procedures published below are strictly confidential and exclusively for the Lamborghini Dealer Network and Authorized Service Points. All copyrights are property of Automobili Lamborghini S.p.A based on copyright law. All of the PDF chapters in the WEB workshop manuals described below are based on information available at the time of publication. The company reserves the right to make updates and modifications. The following are prohibited: reprinting, reproduction, forwarding to unauthorized people and/or third parties, and translation, including partial, without written authorization from Automobili Lamborghini S.p.A.

Ascent

The circuits has the following characteristics:

- Solenoid valve (**1-Fig.5**): closed;
- Solenoid valve (**2-Fig.5**): closed.

The driver can press the “UP” button for longer than two seconds to lift the front axle.

STOP The ECU allows system operation as long as the vehicle is traveling at a speed lower than 70 km/h (Japan only lower than 30 Km/h).

The warning light on the dashboard flashes when the system is lifting the vehicle. The warning light stays on when UP position is reached.
The ascent solenoid valve (**1-Fig.5**) closes to allow the passage of pressurized fluid from the power steering pump to the pressure accumulator and to the two front shock absorbers. The descent solenoid valve (**2-Fig.5**) closes to prevent the fluid from reaching the reservoir. The fluid enters the lower shock absorber chamber and lifts the vehicle. The process is stopped when maximum height, i.e. approximately 40-50 mm more with respect to home position, is reached. This position is reached when the pressure in the system reaches 70 bars and the maximum pressure switch (**4-Fig.5**) opens.

Ascent (Fig.5)	
1.	Ascent solenoid valve
2.	Descent solenoid valve
3.	Minimum pressure switch
4.	Maximum pressure switch
5.	Check valve
6.	Minimum pressure valve
P.	Power steering pump
R.	Reservoir
O.	Front shock absorbers

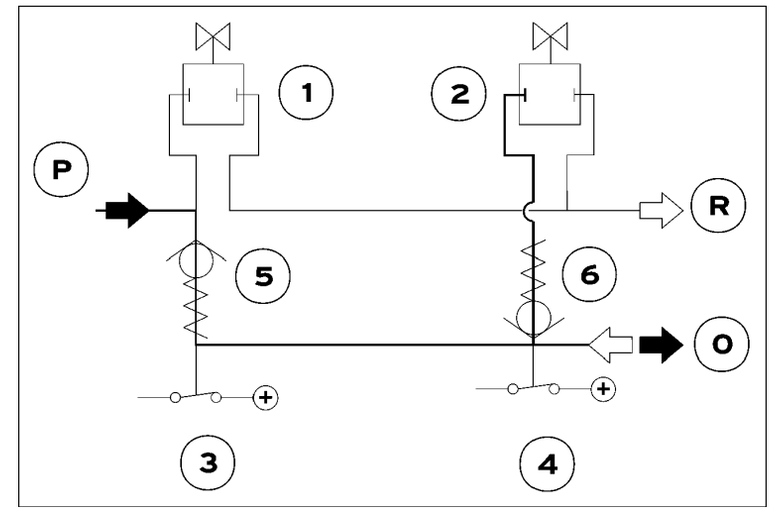

Fig.5

® Automobili Lamborghini S.p.A.
The information and procedures published below are strictly confidential and exclusively for the Lamborghini Dealer Network and Authorized Service Points. All copyrights are property of Automobili Lamborghini S.p.A based on copyright law. All of the PDF chapters in the WEB workshop manuals described below are based on information available at the time of publication. The company reserves the right to make updates and modifications. The following are prohibited: reprinting, reproduction, forwarding to unauthorized people and/or third parties, and translation, including partial, without written authorization from Automobili Lamborghini S.p.A.

High position hold

The circuits has the following characteristics:

- Solenoid valve (**1-Fig.6**): open;
- Solenoid valve (**2-Fig.6**): closed

The pressure in the system is kept at 70 bars. The maximum pressure switch (**4-Fig.6**) is open.
The fluid passes through the solenoid valve (**1-Fig.6**) and is conveyed to the reservoir. The descent solenoid valve (**2-Fig.6**) is closed and prevents the fluid from reaching the reservoir.

High position hold (Fig.6)	
1.	Ascent solenoid valve
2.	Descent solenoid valve
3.	Minimum pressure switch
4.	Maximum pressure switch
5.	Check valve
6.	Minimum pressure valve
P.	Power steering pump
R.	Reservoir
O.	Front shock absorbers

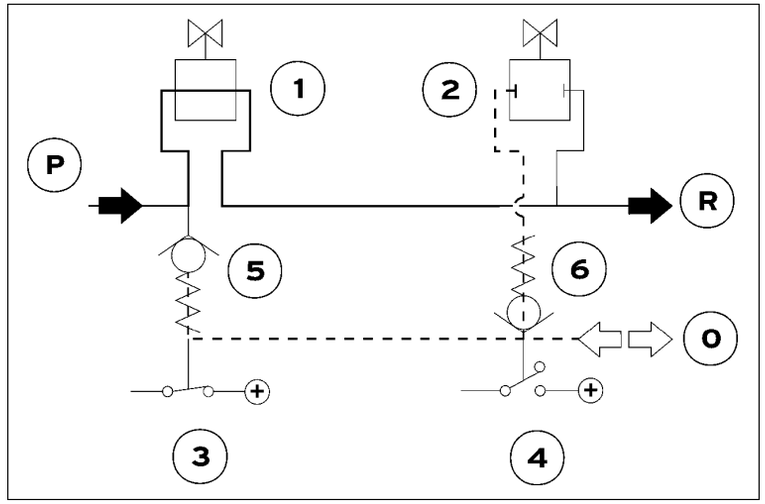

Fig.6

® Automobili Lamborghini S.p.A.
The information and procedures published below are strictly confidential and exclusively for the Lamborghini Dealer Network and Authorized Service Points. All copyrights are property of Automobili Lamborghini S.p.A based on copyright law. All of the PDF chapters in the WEB workshop manuals described below are based on information available at the time of publication. The company reserves the right to make updates and modifications. The following are prohibited: reprinting, reproduction, forwarding to unauthorized people and/or third parties, and translation, including partial, without written authorization from Automobili Lamborghini S.p.A.

Descent

The circuits has the following characteristics:
- Solenoid valve (**1-Fig.7**): open;
- Solenoid valve (**2-Fig.7**): open.

The vehicle can return to normal position either by driver's manual command (by pressing the DOWN button) or automatically when the vehicle exceeds a speed of 70 km/h (30 km/h for Japanese version.)
The fluid passes through the solenoid valve (**1-Fig.7**) and is conveyed to the reservoir. The descent solenoid valve (**2-Fig.7**) opens relieving the fluid from the shock absorbers. The warning light flashes also during the descent.

Descent (Fig.7)	
1.	Ascent solenoid valve
2.	Descent solenoid valve
3.	Minimum pressure switch
4.	Maximum pressure switch
5.	Check valve
6.	Minimum pressure valve
P.	Power steering pump
R.	Reservoir
O.	Front shock absorbers

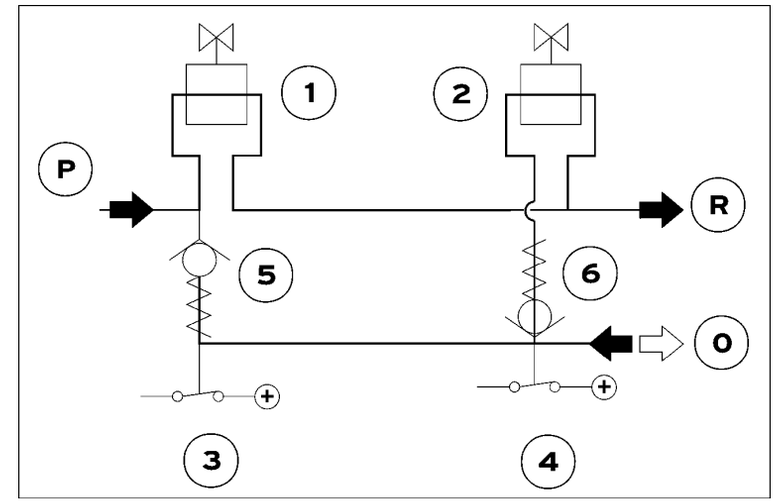

Fig.7

® Automobili Lamborghini S.p.A.
The information and procedures published below are strictly confidential and exclusively for the Lamborghini Dealer Network and Authorized Service Points. All copyrights are property of Automobili Lamborghini S.p.A based on copyright law. All of the PDF chapters in the WEB workshop manuals described below are based on information available at the time of publication. The company reserves the right to make updates and modifications. The following are prohibited: reprinting, reproduction, forwarding to unauthorized people and/or third parties, and translation, including partial, without written authorization from Automobili Lamborghini S.p.A.

The ascent and descent phases last for approximately 20 seconds.

STOP **Up position is held if the vehicle is lifted when the ignition key is turned to OFF. The system stays in UP position if the residual pressure is higher than the maximum pressure (70 bars) at the following start-up (engine running). The system returns to DOWN position if the residual pressure is within the maximum and minimum value (20 bars).**

® Automobili Lamborghini S.p.A.
The information and procedures published below are strictly confidential and exclusively for the Lamborghini Dealer Network and Authorized Service Points. All copyrights are property of Automobili Lamborghini S.p.A based on copyright law. All of the PDF chapters in the WEB workshop manuals described below are based on information available at the time of publication. The company reserves the right to make updates and modifications. The following are prohibited: reprinting, reproduction, forwarding to unauthorized people and/or third parties, and translation, including partial, without written authorization from Automobili Lamborghini S.p.A.

Lifting System oil level check

CAUTION
The oil level check must be performed with the lifting system deactivated.

The oil level must always be within “min” and “max.” notches on the float in the tank. Top up with the recommended oil if necessary (**000300**).

The oil tank is the same of the lifting system and power steering

® Automobili Lamborghini S.p.A.
The information and procedures published below are strictly confidential and exclusively for the Lamborghini Dealer Network and Authorized Service Points. All copyrights are property of Automobili Lamborghini S.p.A based on copyright law. All of the PDF chapters in the WEB workshop manuals described below are based on information available at the time of publication. The company reserves the right to make updates and modifications. The following are prohibited: reprinting, reproduction, forwarding to unauthorized people and/or third parties, and translation, including partial, without written authorization from Automobili Lamborghini S.p.A.

Lifting system disassembly

Preliminary operations

- Disassemble the right engine hood support piston **(082703)**.
- Disassemble the rear silencer safety grid **(025103)**.
- Disassemble the air filter guard **(013303)**.
- Disassemble the air filter unit **(013303)**.

Lifting system disassembly

1. Disconnect the four pipes (**A-Fig.1**) connected to the lifting system.
2. Disconnect the three wiring harnesses (**B-Fig.1**) connected to the lifting system.
3. Free the lifting system from the two brackets (**C-Fig.1**) to which it is anchored.

The lifting system's tank (D-Fig.2) is located on right rear part of the vehicle under the carbon bulkheads.
The tank is equipped with an internal level mark (E-Fig.2) that indicates the minimum oil level when the vehicle is cold and the maximum level when the vehicle is hot.
The oil absolutely must be maintained between the indicated levels.

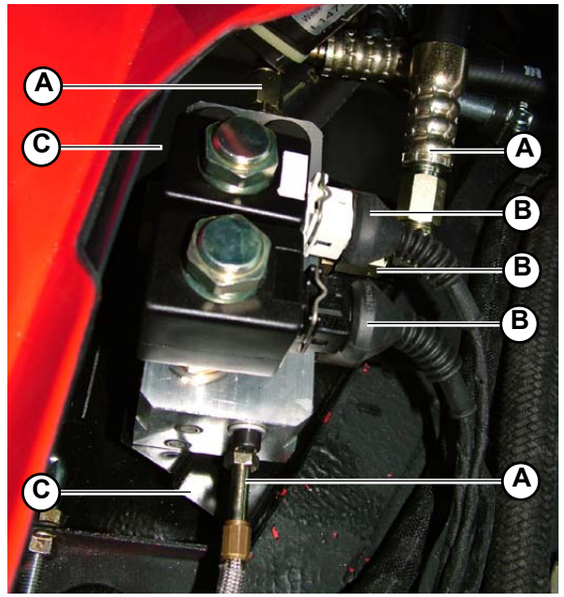

Fig.1

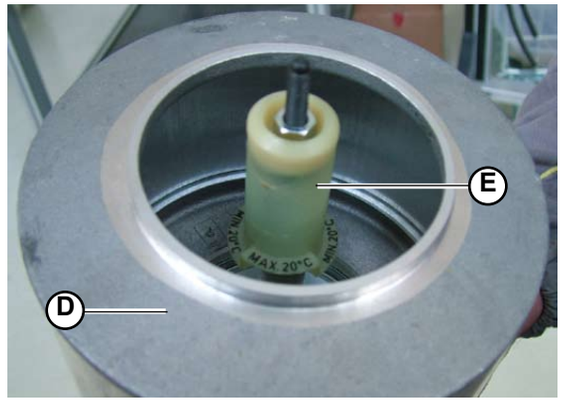

Fig.2

® Automobili Lamborghini S.p.A.
The information and procedures published below are strictly confidential and exclusively for the Lamborghini Dealer Network and Authorized Service Points. All copyrights are property of Automobili Lamborghini S.p.A based on copyright law. All of the PDF chapters in the WEB workshop manuals described below are based on information available at the time of publication. The company reserves the right to make updates and modifications. The following are prohibited: reprinting, reproduction, forwarding to unauthorized people and/or third parties, and translation, including partial, without written authorization from Automobili Lamborghini S.p.A.

Lifting system assembly

1. Attach the lifting system to the two brackets (**A-Fig.1**).

2. Connect the four pipes (**B-Fig.1**) to the lifting system; **tightening torque (000800-15a)**

3. Connect the three wiring harnesses (**C-Fig.1**) to the lifting system.

- Assemble the air filter unit **(013305)**.
- Assemble the air filter guard **(013305)**.
- Assemble the rear silencer safety grid **(025105)**.
- Assemble the right engine hood support piston **(082705)**.

STOP **The lifting system's tank** (**D-Fig.2**) **is located on right rear part of the vehicle under the carbon bulkheads.**
The tank is equipped with an internal level mark (**E-Fig.2**) **that indicates the minimum oil level when the vehicle is cold and the maximum level when the vehicle is hot.**
The oil absolutely must be maintained between the indicated levels.

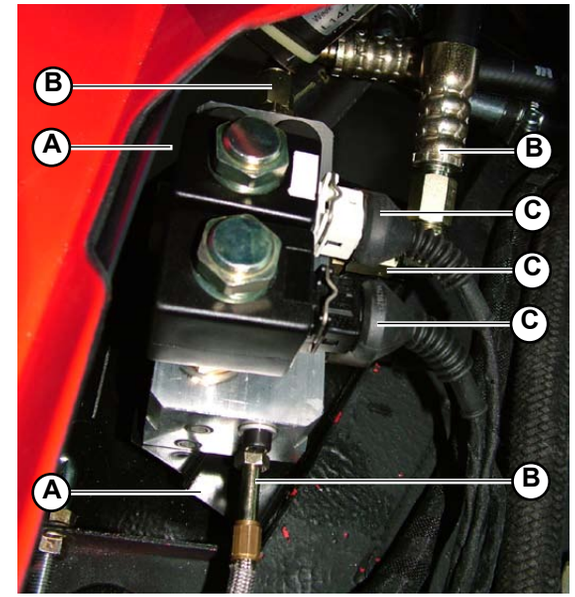

Fig.1

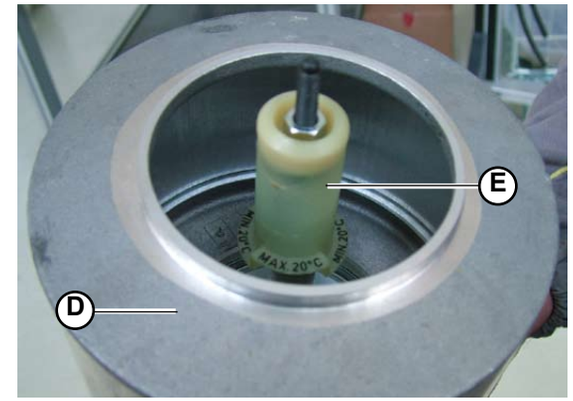

Fig.2

® Automobili Lamborghini S.p.A.
The information and procedures published below are strictly confidential and exclusively for the Lamborghini Dealer Network and Authorized Service Points. All copyrights are property of Automobili Lamborghini S.p.A based on copyright law. All of the PDF chapters in the WEB workshop manuals described below are based on information available at the time of publication. The company reserves the right to make updates and modifications. The following are prohibited: reprinting, reproduction, forwarding to unauthorized people and/or third parties, and translation, including partial, without written authorization from Automobili Lamborghini S.p.A.

Air bleeding from the system (Lifting System)

CAUTION

Warning – high pressure.
Always wear gloves and goggles.
Do not use your hands to find pressure leaks.
Fluids escaping under pressure can have sufficient force to cause skin injuries

The system is self-bleeding. Therefore after removal and installation of one or more hydraulic connections, actuate the system 10-15 times lifting and lowering the car.
If this is not sufficient, operate on the bleeding screw (**E-Fig.1**) taking care to carry out the operation when the car is lowered (Lifting System OFF).

Lifting system operation (Fig.1)	
A.	Lifting System chamber
B.	From power steering pump
C.	To power steering box
D.	To power steering reservoir
E.	Bleeding valve
F.	Power steering pump

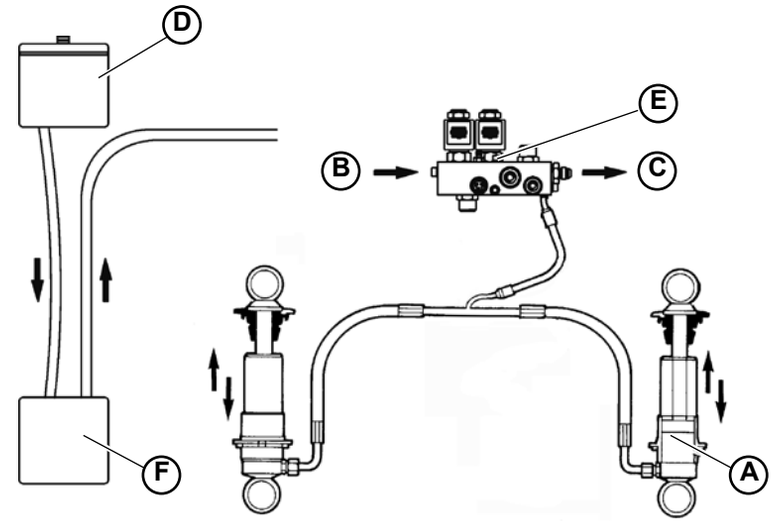

Fig.1

® Automobili Lamborghini S.p.A.
The information and procedures published below are strictly confidential and exclusively for the Lamborghini Dealer Network and Authorized Service Points. All copyrights are property of Automobili Lamborghini S.p.A based on copyright law. All of the PDF chapters in the WEB workshop manuals described below are based on information available at the time of publication. The company reserves the right to make updates and modifications. The following are prohibited: reprinting, reproduction, forwarding to unauthorized people and/or third parties, and translation, including partial, without written authorization from Automobili Lamborghini S.p.A.

Front height from ground

STOP Check the front tire proper inflation.

Adjust operating on the shock absorber ring nut and counter ring nut (**A-Fig.1**).

STOP Carry out the check and adjustment on both sides of the vehicle.

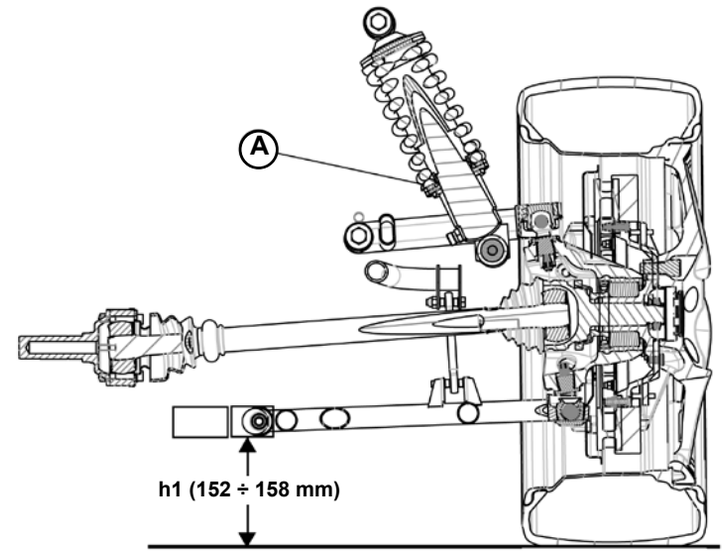

Fig.1

® Automobili Lamborghini S.p.A.
The information and procedures published below are strictly confidential and exclusively for the Lamborghini Dealer Network and Authorized Service Points. All copyrights are property of Automobili Lamborghini S.p.A based on copyright law. All of the PDF chapters in the WEB workshop manuals described below are based on information available at the time of publication. The company reserves the right to make updates and modifications. The following are prohibited: reprinting, reproduction, forwarding to unauthorized people and/or third parties, and translation, including partial, without written authorization from Automobili Lamborghini S.p.A.

Equipment assemble on the wheels

Use available commercial equipment; the one shown in the figure (**Fig.2**) has illustration purposes only.

Take care not to damage the vehicle rims.

Fig.2

® Automobili Lamborghini S.p.A.
The information and procedures published below are strictly confidential and exclusively for the Lamborghini Dealer Network and Authorized Service Points. All copyrights are property of Automobili Lamborghini S.p.A based on copyright law. All of the PDF chapters in the WEB workshop manuals described below are based on information available at the time of publication. The company reserves the right to make updates and modifications. The following are prohibited: reprinting, reproduction, forwarding to unauthorized people and/or third parties, and translation, including partial, without written authorization from Automobili Lamborghini S.p.A.

Front wheel caster angle

Adjust operating on the cam pins (**A-Fig.3**) to reach the specified γ measure.

STOP **Carry out the check and adjustment on both sides of the vehicle.**

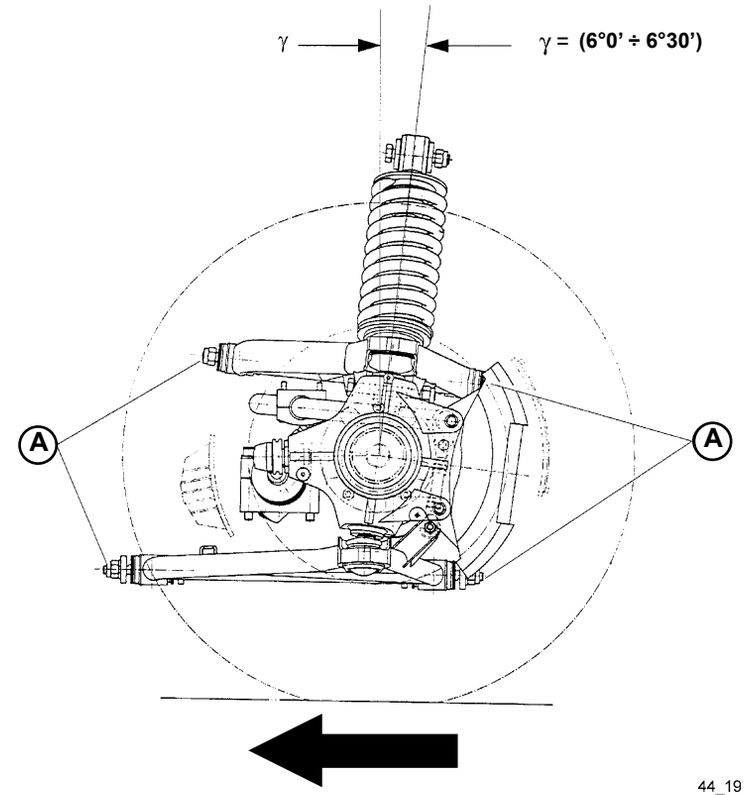

44_19

Fig.3

® Automobili Lamborghini S.p.A.
The information and procedures published below are strictly confidential and exclusively for the Lamborghini Dealer Network and Authorized Service Points. All copyrights are property of Automobili Lamborghini S.p.A based on copyright law. All of the PDF chapters in the WEB workshop manuals described below are based on information available at the time of publication. The company reserves the right to make updates and modifications. The following are prohibited: reprinting, reproduction, forwarding to unauthorized people and/or third parties, and translation, including partial, without written authorization from Automobili Lamborghini S.p.A.

Camber (front wheels)

Adjust operating on the cam pins (**A-Fig.4**)) to reach the specified α measure.

STOP **Carry out the check and adjustment on both sides of the vehicle.**

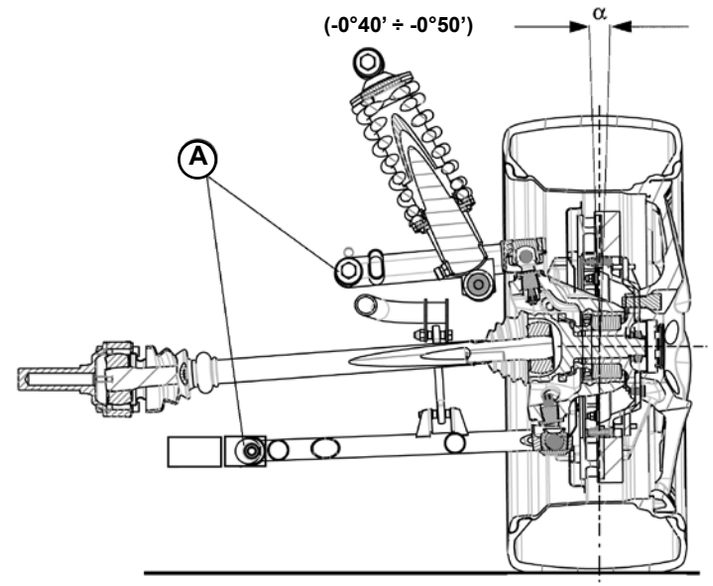

Fig.4

® Automobili Lamborghini S.p.A.
The information and procedures published below are strictly confidential and exclusively for the Lamborghini Dealer Network and Authorized Service Points. All copyrights are property of Automobili Lamborghini S.p.A based on copyright law. All of the PDF chapters in the WEB workshop manuals described below are based on information available at the time of publication. The company reserves the right to make updates and modifications. The following are prohibited: reprinting, reproduction, forwarding to unauthorized people and/or third parties, and translation, including partial, without written authorization from Automobili Lamborghini S.p.A.

Front wheel toe-in

Adjust operating on the steering tie rod after loosening the lock nut (**1-Fig.5**).

The indicated values are related to one wheel only.

STOP **Carry out the check and adjustment on both sides of the vehicle.**

The total value must be 0.08 ÷ 0.12 mm.

B = A + (0,04 ÷ 0,06) mm

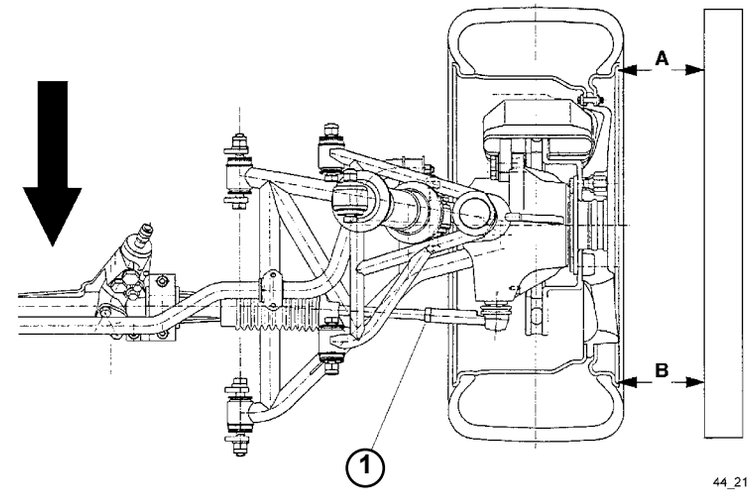

Fig.5

Front misalignment (Fig.6)	
A.	Adjustment shim SP

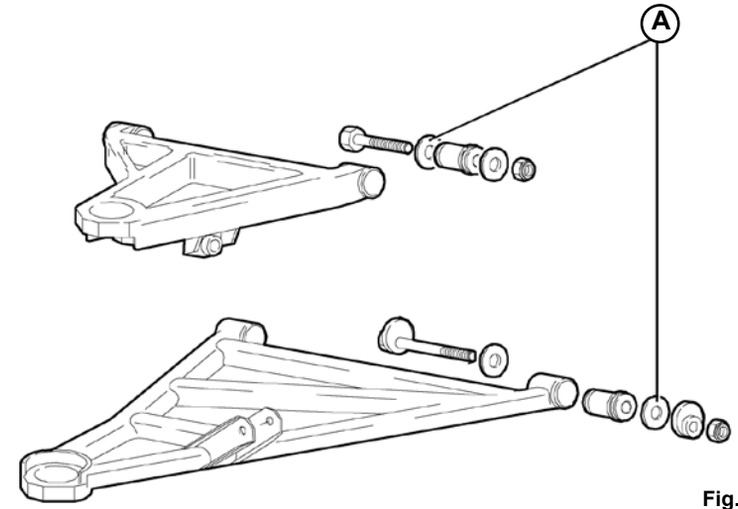

Fig.6

® Automobili Lamborghini S.p.A.
The information and procedures published below are strictly confidential and exclusively for the Lamborghini Dealer Network and Authorized Service Points. All copyrights are property of Automobili Lamborghini S.p.A based on copyright law. All of the PDF chapters in the WEB workshop manuals described below are based on information available at the time of publication. The company reserves the right to make updates and modifications. The following are prohibited: reprinting, reproduction, forwarding to unauthorized people and/or third parties, and translation, including partial, without written authorization from Automobili Lamborghini S.p.A.

This section explains how to disassemble:

A) Hub disassembly
B) Bearing disassembly

A) Hub disassembly

Preliminary operations

- Raise the car on the car lift **(000000)**.
- Remove the front wheel **(060103)**.
- Remove the brake caliper **(060703)**.
- Remove the brake disk **(061503)**.
- Release the axle shaft **(040103)**.
- Release the shock absorber **(041303)**.

Hub disassembly

1. Extract the phonic wheel (**A-Fig.1**).
2. Remove the 2 split pins **(B-Fig.1)** and unscrew the 2 nuts **(C-Fig.1)**.
3. Unscrew the nut **(D-Fig.2)** and extract the steering joint **(E-Fig.2)**.
4. Remove the hub.

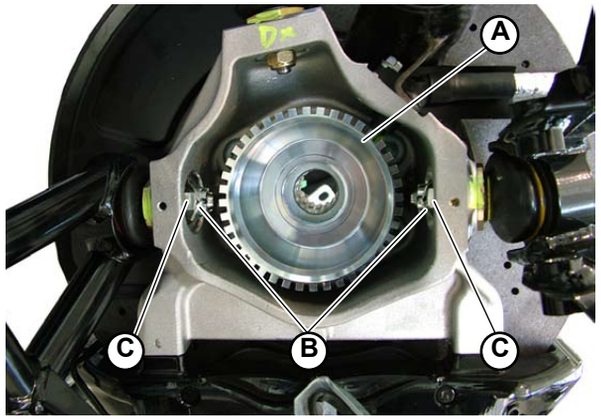

Fig.1

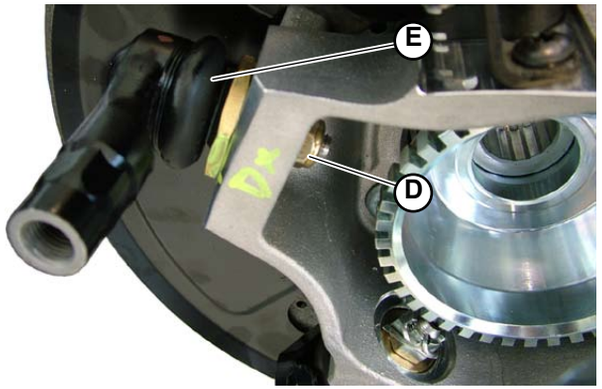

Fig.2

STOP Carefully remove the hub without damaging the joint's guard on the suspension arm.

® Automobili Lamborghini S.p.A.
The information and procedures published below are strictly confidential and exclusively for the Lamborghini Dealer Network and Authorized Service Points. All copyrights are property of Automobili Lamborghini S.p.A based on copyright law. All of the PDF chapters in the WEB workshop manuals described below are based on information available at the time of publication. The company reserves the right to make updates and modifications. The following are prohibited: reprinting, reproduction, forwarding to unauthorized people and/or third parties, and translation, including partial, without written authorization from Automobili Lamborghini S.p.A.

B) Bearing disassembly

Preliminary operations

- Raise the car on the car lift **(000000)**.
- Remove the front wheel **(060103)**.
- Remove the brake caliper **(060703)**.
- Remove the brake disk **(061503)**.
- Release the axle shaft **(040103)**.
- Release the shock absorber **(041303)**.
- Remove the springs **(041103)**.

Bearing disassembly

1. Remove the hub assembly + hub carrier.
2. Extract the phonic wheel (**A-Fig.3**).
3. Unscrew the 4 screws (**B-Fig.4**) securing the hub carrier to the bearing.
4. Remove the hub carrier (**C-Fig.4**).
5. Using a puller, extract the bearing (**D-Fig.5**) from the hub (**E-Fig.5**).

It is absolutely forbidden to reassemble the removed bearing during subsequent re-assembly procedures.

Fig.3

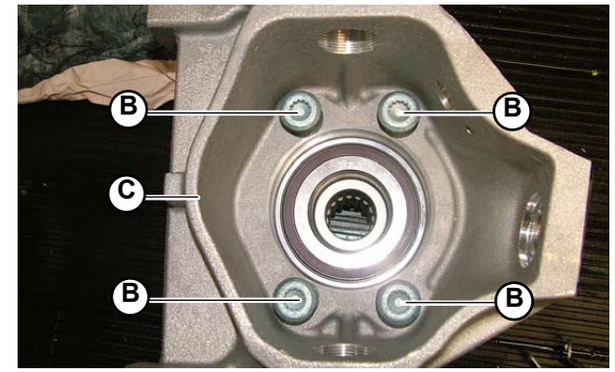

Fig.4

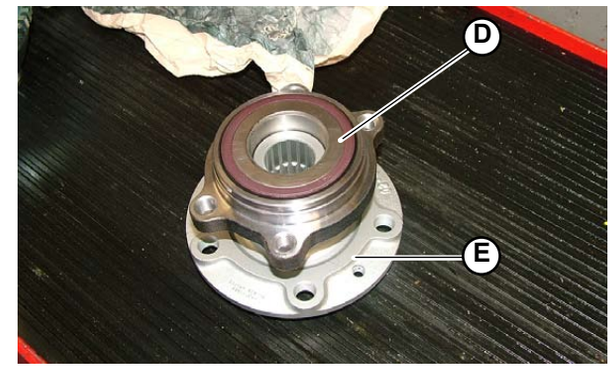

Fig.5

® Automobili Lamborghini S.p.A.
The information and procedures published below are strictly confidential and exclusively for the Lamborghini Dealer Network and Authorized Service Points. All copyrights are property of Automobili Lamborghini S.p.A based on copyright law. All of the PDF chapters in the WEB workshop manuals described below are based on information available at the time of publication. The company reserves the right to make updates and modifications. The following are prohibited: reprinting, reproduction, forwarding to unauthorized people and/or third parties, and translation, including partial, without written authorization from Automobili Lamborghini S.p.A.

This section explains how to assemble:

A) Hub assembly
B) Bearing assembly

A) Hub assembly

1. Position the steering joint **(A-Fig.1)** and tighten the nut **(B-Fig.1)**.
2. Tighten the 2 nuts **(C-Fig.2)** and insert the 2 split pins **(D-Fig.2)**..
3. Position the phonic wheel (**E-Fig.2**) inside the hub carrier.

- Secure the shock absorber **(041305)**.
- Secure the axle shaft **(040105)**.
- Assemble the brake disk **(061505)**.
- Assemble the brake caliper **(060705)**.
- Assemble the front wheel **(060105).**

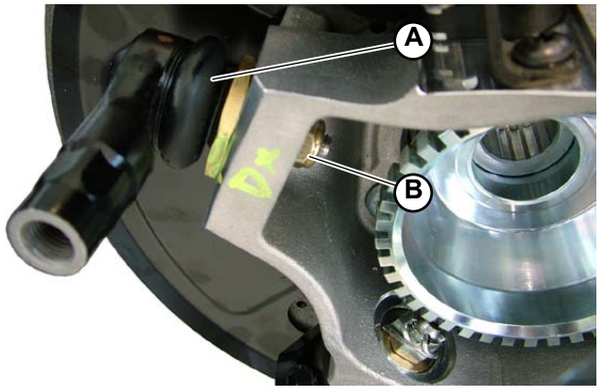

Fig.1

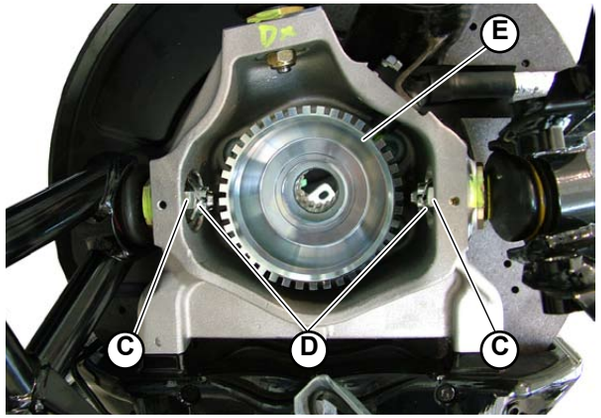

Fig.2

STOP **Carefully remove the hub without damaging the joint's guard on the suspension arm.**

® Automobili Lamborghini S.p.A.
The information and procedures published below are strictly confidential and exclusively for the Lamborghini Dealer Network and Authorized Service Points. All copyrights are property of Automobili Lamborghini S.p.A based on copyright law. All of the PDF chapters in the WEB workshop manuals described below are based on information available at the time of publication. The company reserves the right to make updates and modifications. The following are prohibited: reprinting, reproduction, forwarding to unauthorized people and/or third parties, and translation, including partial, without written authorization from Automobili Lamborghini S.p.A.

B) Bearing assembly

1. Using a press, assemble the bearing (**A-Fig.3**) on the hub (**B-Fig.3**).

STOP It is absolutely forbidden to reassemble the removed bearing; always use a new bearing.

2. Position the hub carrier (**C-Fig.4**) and secure to the bearing using the 4 screws (**D-Fig.4**).
3. Position the phonic wheel (**E-Fig.5**) inside the hub carrier.

- Assemble the springs **(041105)**.
- Secure the shock absorber **(041305)**.
- Secure the axle shaft **(040105)**.
- Assemble the brake disk **(061505)**.
- Assemble the brake caliper **(060705)**.
- Assemble the front wheel **(060105).**

The car must undergo a self-levelling test before returning to road use (001100).

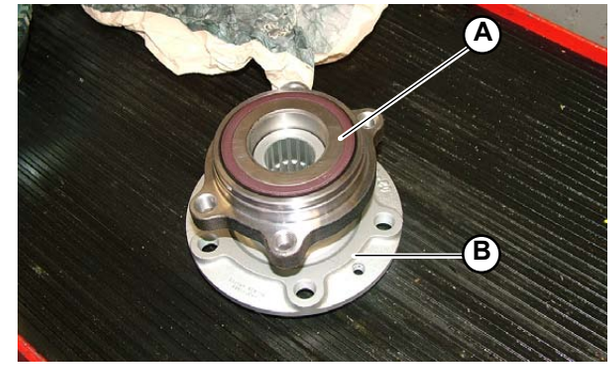

Fig.3

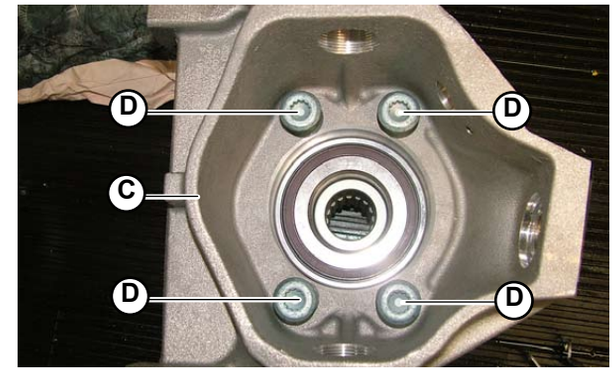

Fig.4

Fig.5

® Automobili Lamborghini S.p.A.
The information and procedures published below are strictly confidential and exclusively for the Lamborghini Dealer Network and Authorized Service Points. All copyrights are property of Automobili Lamborghini S.p.A based on copyright law. All of the PDF chapters in the WEB workshop manuals described below are based on information available at the time of publication. The company reserves the right to make updates and modifications. The following are prohibited: reprinting, reproduction, forwarding to unauthorized people and/or third parties, and translation, including partial, without written authorization from Automobili Lamborghini S.p.A.

Front differential

The front differential is driven directly by the gearbox countershaft by means of the propeller shaft. The front differential is partially self-locking and features a viscous coupling, that ensures the distribution of the torque between the forecarriage and the rear axle.

A.	Crown
B.	Differential
C.	Pinion
D.	Differential carrier
E.	Viscous coupling
F.	Viscous coupling ball bearing
G.	Viscous coupling roller bearing
H.	Pinion roller bearings
I.	Differential roller bearings
L.	Axle shaft flange
M.	Axle shaft flange bearing
N.	Differential bearing
O.	Cover

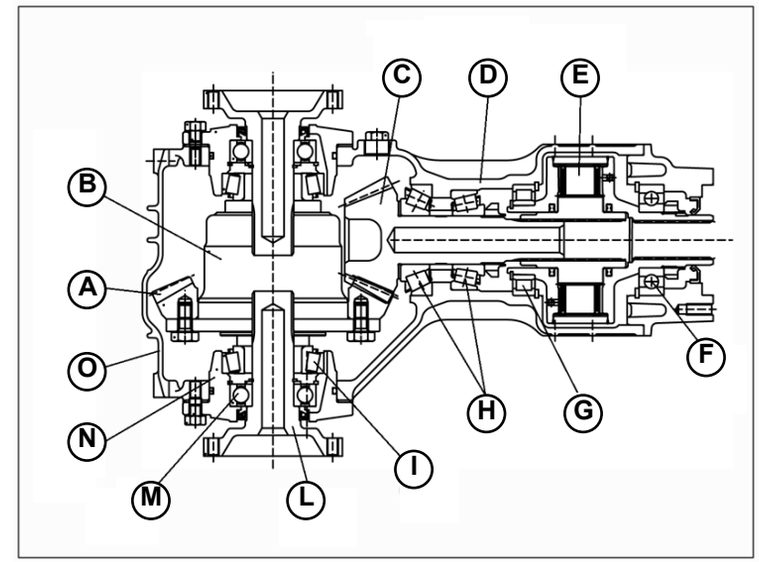

Fig.1

® Automobili Lamborghini S.p.A.
The information and procedures published below are strictly confidential and exclusively for the Lamborghini Dealer Network and Authorized Service Points. All copyrights are property of Automobili Lamborghini S.p.A based on copyright law. All of the PDF chapters in the WEB workshop manuals described below are based on information available at the time of publication. The company reserves the right to make updates and modifications. The following are prohibited: reprinting, reproduction, forwarding to unauthorized people and/or third parties, and translation, including partial, without written authorization from Automobili Lamborghini S.p.A.

Reduction crown wheel and pinion	Hypoid
Reduction ratio	1:2.9333
Self-locking percentage	25%
Bearing type	taper roller
Pre-load adjustment	with spacer washers
Pinion bearing pre-load: rolling torque	11 ± 1 daNm
Crown bearing pre-load: rolling torque	21 ± 1 daNm
Pinion-crown coupling clearance (mm)	0.09 ± 0.12

® Automobili Lamborghini S.p.A.
The information and procedures published below are strictly confidential and exclusively for the Lamborghini Dealer Network and Authorized Service Points. All copyrights are property of Automobili Lamborghini S.p.A based on copyright law. All of the PDF chapters in the WEB workshop manuals described below are based on information available at the time of publication. The company reserves the right to make updates and modifications. The following are prohibited: reprinting, reproduction, forwarding to unauthorized people and/or third parties, and translation, including partial, without written authorization from Automobili Lamborghini S.p.A.

Front differential adjustment

CAUTION

- All operations must be carried out with the utmost care to avoid injury to people.
- Specific tools are required for certain procedures. The use of these tools is essential to ensure safe operation.
- Follow the safety rules in force in the workshop. Specific warnings are provided in the Manual where specific precautions are required to prevent hazardous situations.
- When employing chemical products scrupulously follow the instructions shown on the safety data sheet that the supplier is required to hand over to the user

WARNING

- All operations must be carried out with the utmost care to avoid damage to components.
- Use a depth gauge with a minimum precision of 1/100 mm for measuring.
- During the disassembly Check that the elements have the correct reference marks as required.
- During the reassembly lubricate the required parts to prevent seizing during initial operation.
- During the reassembly respect the tightening torques and the adjustment data.
- Replace gaskets, seals, snap rings, safety plates, self-locking nuts, caulked edge nuts and all other worn out parts during each reassembly.

® Automobili Lamborghini S.p.A.
The information and procedures published below are strictly confidential and exclusively for the Lamborghini Dealer Network and Authorized Service Points. All copyrights are property of Automobili Lamborghini S.p.A based on copyright law. All of the PDF chapters in the WEB workshop manuals described below are based on information available at the time of publication. The company reserves the right to make updates and modifications. The following are prohibited: reprinting, reproduction, forwarding to unauthorized people and/or third parties, and translation, including partial, without written authorization from Automobili Lamborghini S.p.A.

STOP **The following procedures can only be completely carried out after removing the differential (030903) from the vehicle.**

Proceed as follows:

- Install the prescribed tentative adjusting shims (**A-Fig.1**) and (**B-Fig.1**):
  Tentative adjusting shim A: sA=1.75 mm
  Tentative adjusting shim B: sB=1.10 mm

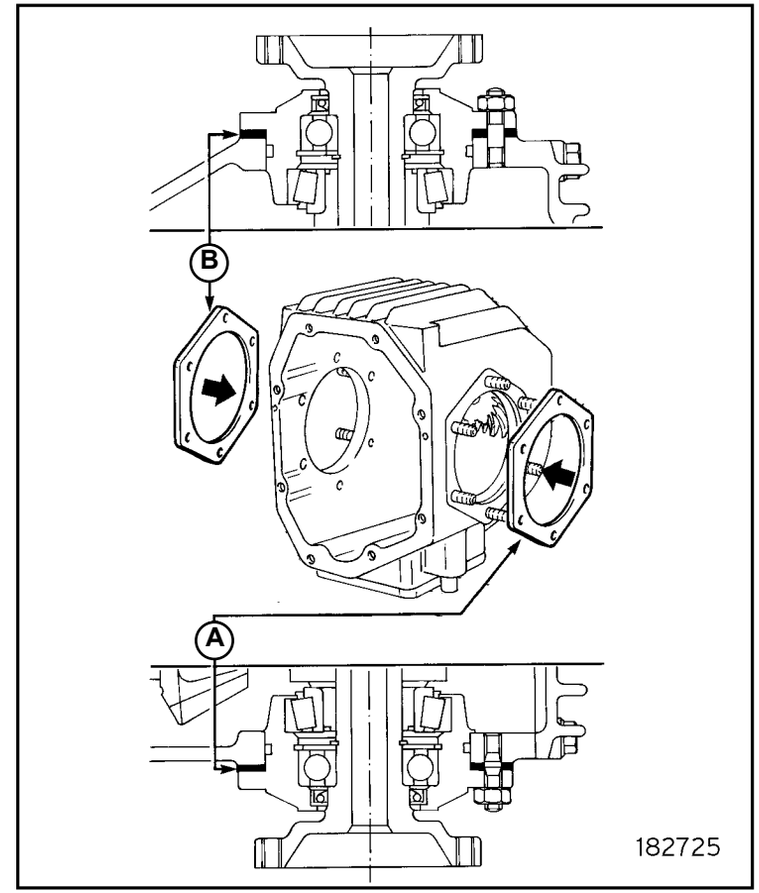

Fig.1

® Automobili Lamborghini S.p.A.
The information and procedures published below are strictly confidential and exclusively for the Lamborghini Dealer Network and Authorized Service Points. All copyrights are property of Automobili Lamborghini S.p.A based on copyright law. All of the PDF chapters in the WEB workshop manuals described below are based on information available at the time of publication. The company reserves the right to make updates and modifications. The following are prohibited: reprinting, reproduction, forwarding to unauthorized people and/or third parties, and translation, including partial, without written authorization from Automobili Lamborghini S.p.A.

- Check the correct bearing pre-load as follows:
  - install a suitable tool for measuring the rolling torque on a axle shaft flange.

STOP **The planetary gear set does not need to be fastened thanks to the intrinsic characteristics of this differential.**

- Check that the rolling torque (ignoring the pickup one) is within the prescribed values.

- Work on adjusting shim (**A-Fig.2**) if this is not so:
  - to increase torque → decrease the value of shim A;
  - to decrease torque → increase the value of shim A.

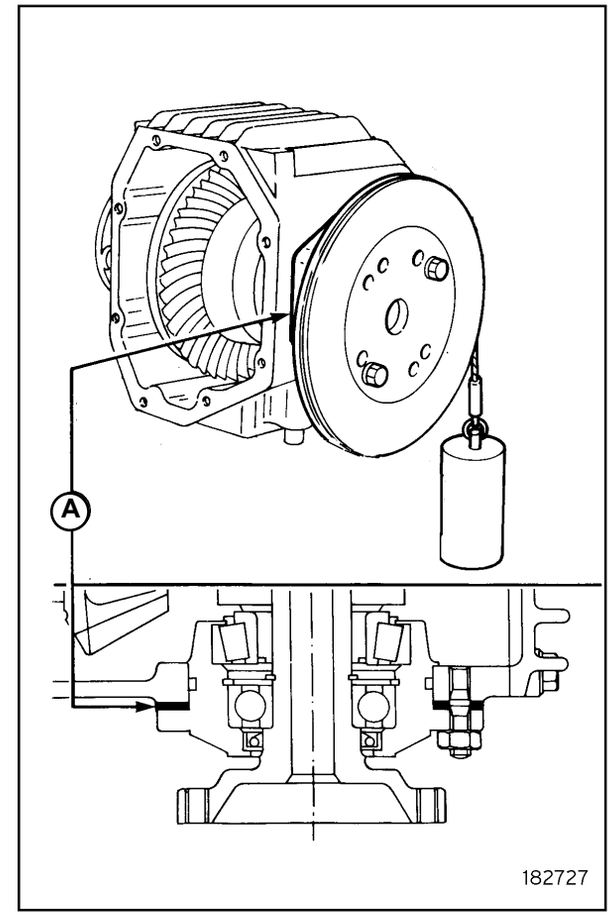

Fig.2

® Automobili Lamborghini S.p.A.
The information and procedures published below are strictly confidential and exclusively for the Lamborghini Dealer Network and Authorized Service Points. All copyrights are property of Automobili Lamborghini S.p.A based on copyright law. All of the PDF chapters in the WEB workshop manuals described below are based on information available at the time of publication. The company reserves the right to make updates and modifications. The following are prohibited: reprinting, reproduction, forwarding to unauthorized people and/or third parties, and translation, including partial, without written authorization from Automobili Lamborghini S.p.A.

NOTE
The pinion bearing pre-load and the pinion height are strictly related: in case of pre-load adjustment check and, if necessary, adjust the pinion height: in case of pinion height adjustment check and, if necessary, adjust the pinion pre-load: each operation is correctly carried out only if the pinion pre-load and the pinion height are within the prescribed values.

- Remove the hubs and the differential assembly.
- Install both the pinion roller bearing outer rings to the differential carrier.
- Install the tentative shim (**A-Fig.3**)to the pinion:
  sD=1.5 mm
- Install the taper roller bearing to the pinion (**B-Fig.3**).
- Install the tentative spacer (**C-Fig.3**) to the pinion:
  sC=16.85 mm

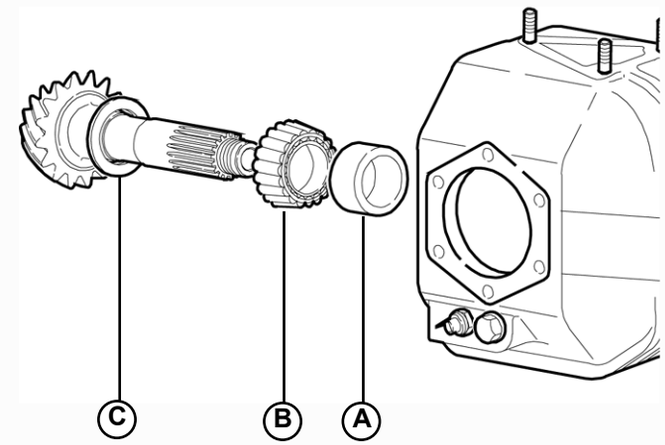

Fig.3

® Automobili Lamborghini S.p.A.
The information and procedures published below are strictly confidential and exclusively for the Lamborghini Dealer Network and Authorized Service Points. All copyrights are property of Automobili Lamborghini S.p.A based on copyright law. All of the PDF chapters in the WEB workshop manuals described below are based on information available at the time of publication. The company reserves the right to make updates and modifications. The following are prohibited: reprinting, reproduction, forwarding to unauthorized people and/or third parties, and translation, including partial, without written authorization from Automobili Lamborghini S.p.A.

- Check the correct bearing pre-load as follows:
  - install a suitable tool for measuring the rolling torque on the pinion splined shaft;
  - check that the rolling torque, ignoring the pickup one, is within the prescribed values.
  - if this is not so, operate on spacer (**C-Fig.4**) thickness as follows:
    - to increase torque → decrease the thickness of spacer C;
    - to decrease torque → increase the thickness of spacer C.

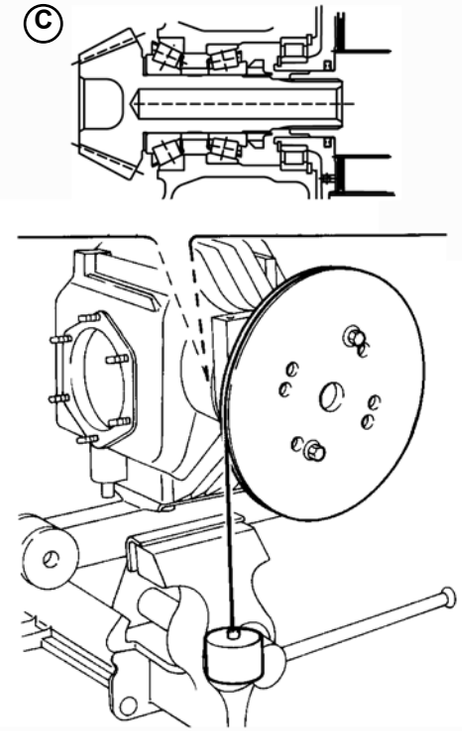

Fig.4

A torque value tending towards the upper tolerance limit should be preferred.

NOTE
The pinion bearing pre-load and the pinion height are strictly related: in case of pre-load adjustment check and, if necessary, adjust the pinion height: in case of pinion height adjustment check and, if necessary, adjust the pinion pre-load: each operation is correctly carried out only if the pinion pre-load and the pinion height are within the prescribed values.

® Automobili Lamborghini S.p.A.
The information and procedures published below are strictly confidential and exclusively for the Lamborghini Dealer Network and Authorized Service Points. All copyrights are property of Automobili Lamborghini S.p.A based on copyright law. All of the PDF chapters in the WEB workshop manuals described below are based on information available at the time of publication. The company reserves the right to make updates and modifications. The following are prohibited: reprinting, reproduction, forwarding to unauthorized people and/or third parties, and translation, including partial, without written authorization from Automobili Lamborghini S.p.A.

- Install **(000200-25b)** special tool in the hub seats and check that the dial gauge reading is within the prescribed values:
  dimension X: 51.69 ± 0.03 mm

- In case the value in not within the prescribed values, operate on the adjusting shims (**D-Fig.6**) as follows:
  - to increase dimension X → decrease shim D;
  - to decrease dimension X → increase shim D;
  - check dimension X again.

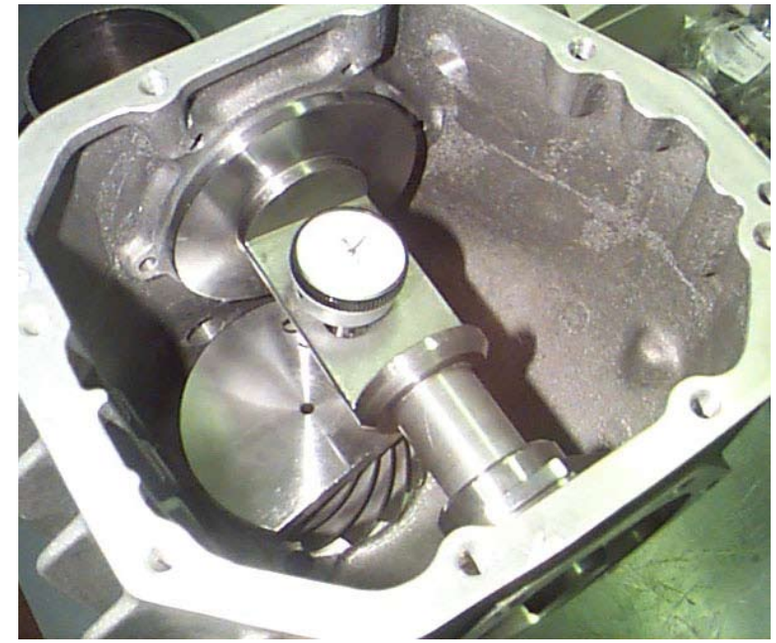

Fig.5

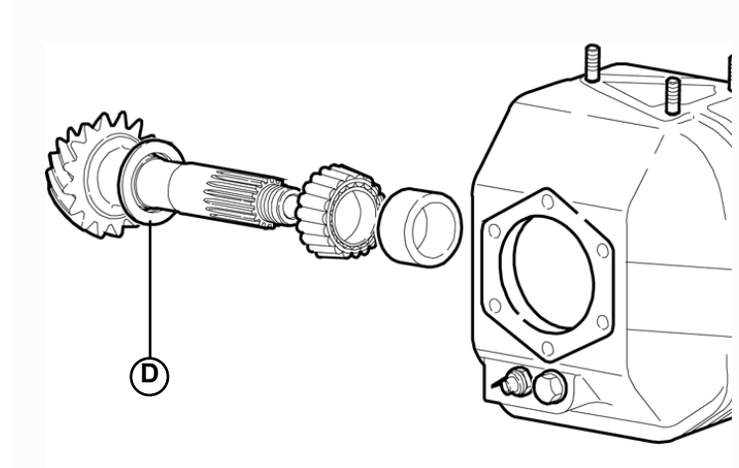

Fig.6

® Automobili Lamborghini S.p.A.
The information and procedures published below are strictly confidential and exclusively for the Lamborghini Dealer Network and Authorized Service Points. All copyrights are property of Automobili Lamborghini S.p.A based on copyright law. All of the PDF chapters in the WEB workshop manuals described below are based on information available at the time of publication. The company reserves the right to make updates and modifications. The following are prohibited: reprinting, reproduction, forwarding to unauthorized people and/or third parties, and translation, including partial, without written authorization from Automobili Lamborghini S.p.A.

STOP Tighten the pinion mounting ring nut to the prescribed tightening torque whenever dimension X is measured

- Install the hubs and the differential.
- Install the previously identified adjusting shims (**A/B-Fig.1**), position the differential assembly, install the hub on both sides and tighten the nuts to the prescribed tightening torque.
- Check the correct pinion-crown clearance as follows:
  - check that the value is within the prescribed values by means of a dial gauge:
    pinion-crown clearance: 0.09 – 0.12 mm

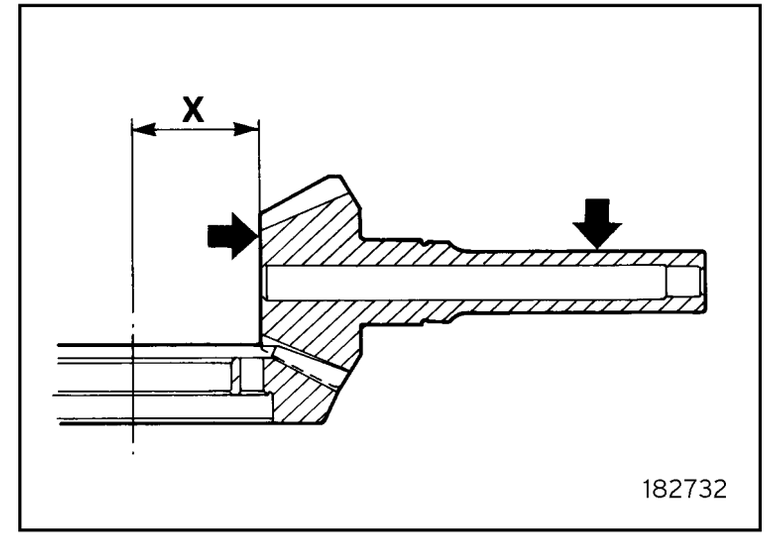

Fig.7

® Automobili Lamborghini S.p.A.
The information and procedures published below are strictly confidential and exclusively for the Lamborghini Dealer Network and Authorized Service Points. All copyrights are property of Automobili Lamborghini S.p.A based on copyright law. All of the PDF chapters in the WEB workshop manuals described below are based on information available at the time of publication. The company reserves the right to make updates and modifications. The following are prohibited: reprinting, reproduction, forwarding to unauthorized people and/or third parties, and translation, including partial, without written authorization from Automobili Lamborghini S.p.A.

- if it is not, without varying the crown bearing pre-load, operate on the adjusting shims as follows:
  - to decrease the clearance → decrease shim B and increase shim A accordingly;
  - to increase the clearance → increase shim B and decrease shim A accordingly;

- Remove the hubs at the end of the operation.

Fig.8

® Automobili Lamborghini S.p.A.
The information and procedures published below are strictly confidential and exclusively for the Lamborghini Dealer Network and Authorized Service Points. All copyrights are property of Automobili Lamborghini S.p.A based on copyright law. All of the PDF chapters in the WEB workshop manuals described below are based on information available at the time of publication. The company reserves the right to make updates and modifications. The following are prohibited: reprinting, reproduction, forwarding to unauthorized people and/or third parties, and translation, including partial, without written authorization from Automobili Lamborghini S.p.A.

Front differential disassembly

CAUTION

- All operations must be carried out with the utmost care to avoid injury to people.
- Specific tools are required for certain procedures. The use of these tools is essential to ensure safe operation.
- Follow the safety rules in force in the workshop. Specific warnings are provided in the Manual where specific precautions are required to prevent hazardous situations.
- When employing chemical products scrupulously follow the instructions shown on the safety data sheet that the supplier is required to hand over to the user.

WARNING

- All operations must be carried out with the utmost care to avoid damage to components.
- Use a depth gauge with a minimum precision of 1/100 mm for measuring.
- Loosen tight-fitting ferrous parts by tapping with an aluminium or lead hammer and loosen tight-fitting light alloy parts by tapping with a resin or a wooden hammer.

® Automobili Lamborghini S.p.A.
The information and procedures published below are strictly confidential and exclusively for the Lamborghini Dealer Network and Authorized Service Points. All copyrights are property of Automobili Lamborghini S.p.A based on copyright law. All of the PDF chapters in the WEB workshop manuals described below are based on information available at the time of publication. The company reserves the right to make updates and modifications. The following are prohibited: reprinting, reproduction, forwarding to unauthorized people and/or third parties, and translation, including partial, without written authorization from Automobili Lamborghini S.p.A.

Preliminary operations:

- Position the vehicle on a car lift **(000000)**.
- Remove the upper upholstery panel from the front boot **(080603)**.

Differential disassembly:

1. Disconnect the oil temperature sensor's plug (**A-Fig.1**).

2. Remove the axle shaft screws (**B-Fig.1**).

3. Unscrew propeller shaft/gearbox coupling (**C-Fig.2**).

4. Remove the 4 socket head screws and disassemble the chassis support cross member (**D-Fig.3**).

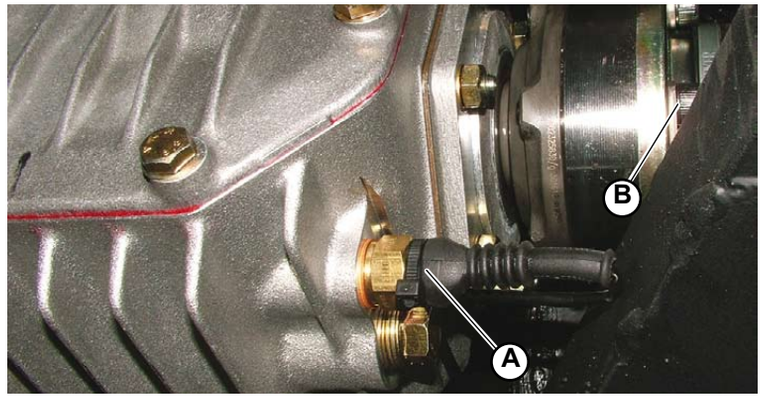

Fig.1

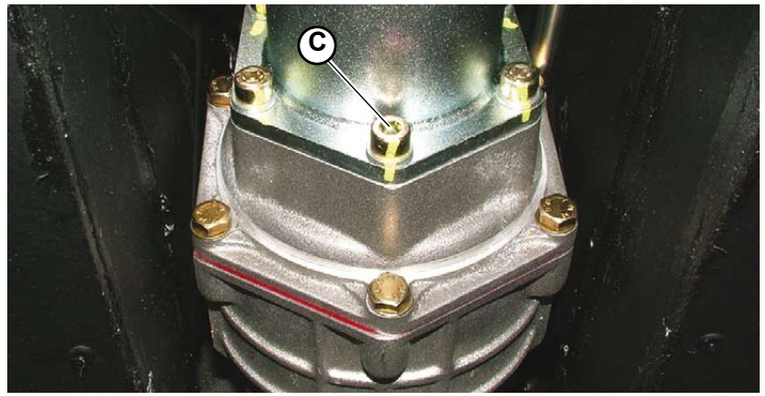

Fig.2

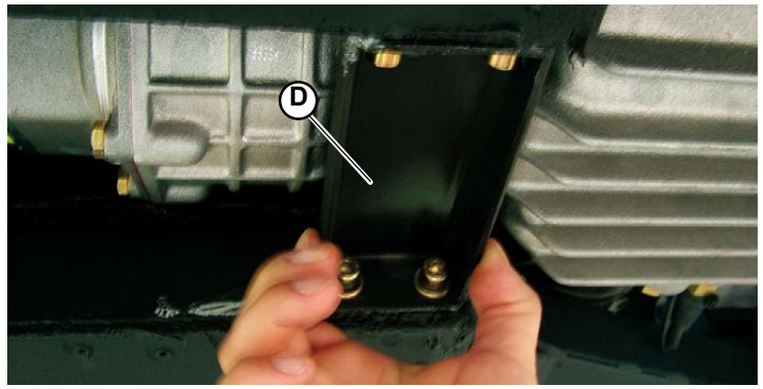

Fig.3

® Automobili Lamborghini S.p.A.
The information and procedures published below are strictly confidential and exclusively for the Lamborghini Dealer Network and Authorized Service Points. All copyrights are property of Automobili Lamborghini S.p.A based on copyright law. All of the PDF chapters in the WEB workshop manuals described below are based on information available at the time of publication. The company reserves the right to make updates and modifications. The following are prohibited: reprinting, reproduction, forwarding to unauthorized people and/or third parties, and translation, including partial, without written authorization from Automobili Lamborghini S.p.A.

5. Remove the 2 nuts (**E-Fig.4**) that secure the differential.

6. With the help of a support, remove the front differential (**F-Fig.5**).

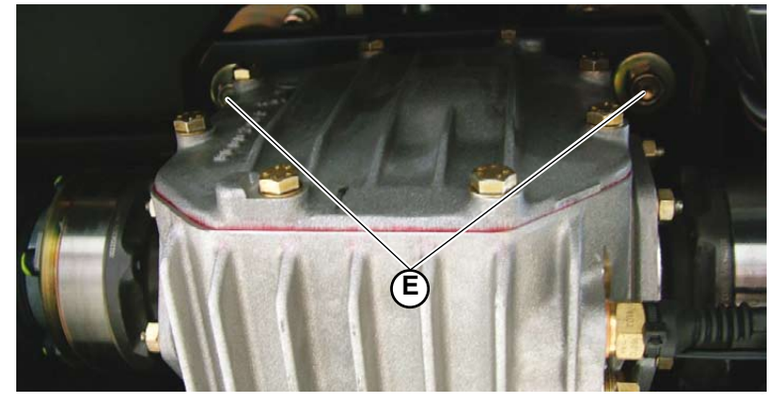

Fig.4

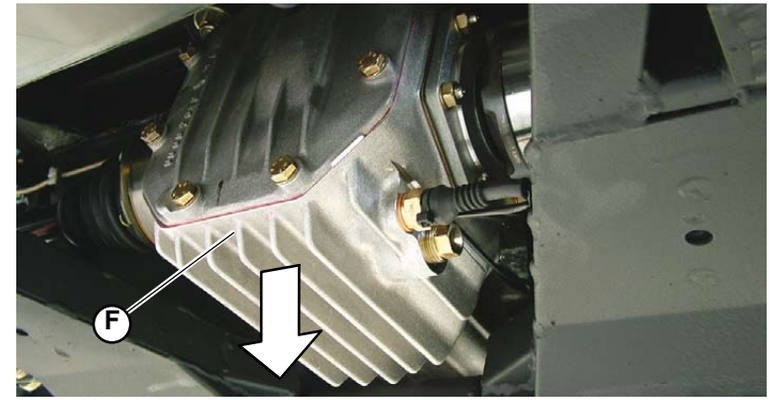

Fig.5

® Automobili Lamborghini S.p.A.
The information and procedures published below are strictly confidential and exclusively for the Lamborghini Dealer Network and Authorized Service Points. All copyrights are property of Automobili Lamborghini S.p.A based on copyright law. All of the PDF chapters in the WEB workshop manuals described below are based on information available at the time of publication. The company reserves the right to make updates and modifications. The following are prohibited: reprinting, reproduction, forwarding to unauthorized people and/or third parties, and translation, including partial, without written authorization from Automobili Lamborghini S.p.A.

Front differential assembly

CAUTION

- All operations must be carried out with the utmost care to avoid injury to people.
- Specific tools are required for certain procedures. The use of these tools is essential to ensure safe operation.
- Follow the safety rules in force in the workshop. Specific warnings are provided in the Manual where specific precautions are required to prevent hazardous situations.
- When employing chemical products scrupulously follow the instructions shown on the safety data sheet that the supplier is required to hand over to the user

WARNING

- All operations must be carried out with the utmost care to avoid damage to components.
- Use a depth gauge with a minimum precision of 1/100 mm for measuring.
- During the disassembly Check that the elements have the correct reference marks as required.
- During the reassembly lubricate the required parts to prevent seizing during initial operation.
- During the reassembly respect the tightening torques and the adjustment data.
- Replace gaskets, seals, snap rings, safety plates, self-locking nuts, caulked edge nuts and all other worn out parts during each reassembly.
- Use Loctite/Arexons 518 sealant or Loctite/Arexons 641 sealant as instructed during the reassembly.
- Use Loctite/Arexons medium thread sealant 52A42 or Loctite/Arexons strong thread sealant 52A70 during the reassembly.

® Automobili Lamborghini S.p.A.
The information and procedures published below are strictly confidential and exclusively for the Lamborghini Dealer Network and Authorized Service Points. All copyrights are property of Automobili Lamborghini S.p.A based on copyright law. All of the PDF chapters in the WEB workshop manuals described below are based on information available at the time of publication. The company reserves the right to make updates and modifications. The following are prohibited: reprinting, reproduction, forwarding to unauthorized people and/or third parties, and translation, including partial, without written authorization from Automobili Lamborghini S.p.A.

1. Lift the differential with its bracket (**A-Fig.1**) by means of a specific hydraulic lifting system and, keeping it into the correct position, introduce the front splined propeller shaft in the differential seat.

2. Fasten the bracket to the frame by means of two bolts (**B-Fig.2**); tighten as necessary.

3. Fasten the supporting cross member (**C-Fig.3**) to the frame by means of the four socket head screws; tighten as necessary.

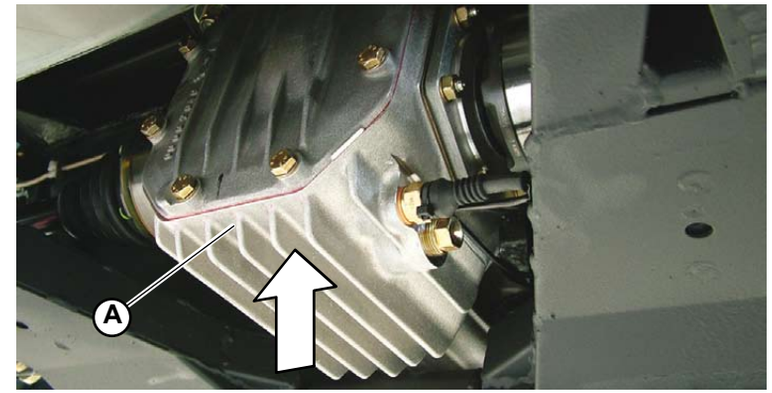

Fig.1

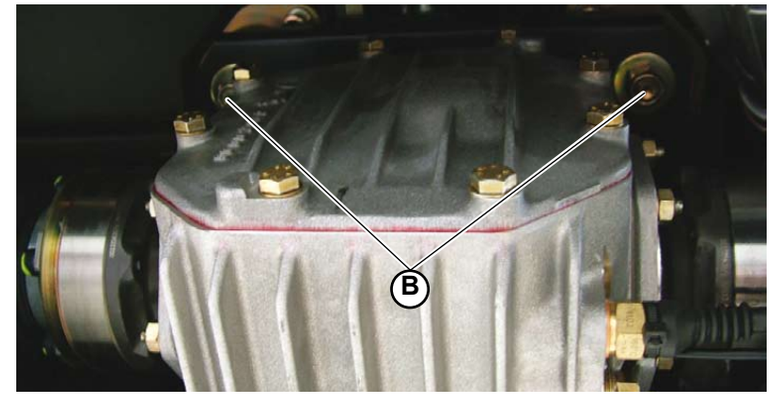

Fig.2

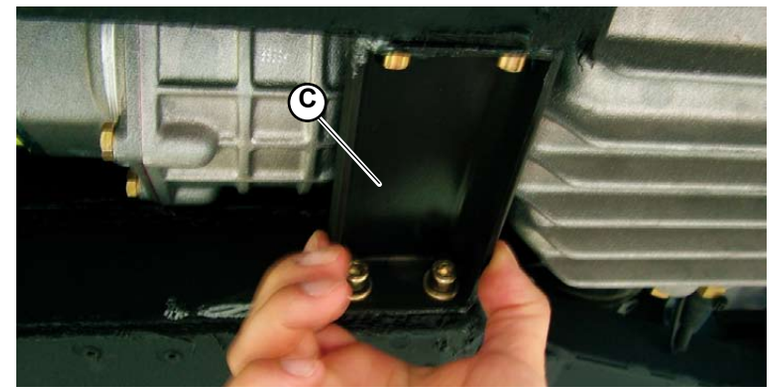

Fig.3

® Automobili Lamborghini S.p.A.
The information and procedures published below are strictly confidential and exclusively for the Lamborghini Dealer Network and Authorized Service Points. All copyrights are property of Automobili Lamborghini S.p.A based on copyright law. All of the PDF chapters in the WEB workshop manuals described below are based on information available at the time of publication. The company reserves the right to make updates and modifications. The following are prohibited: reprinting, reproduction, forwarding to unauthorized people and/or third parties, and translation, including partial, without written authorization from Automobili Lamborghini S.p.A.

4. Fasten the differential input flange to the propeller shaft pipe by means of the 6 socket head screws (**D-Fig.4**):
propeller shaft flange screws: **tightening torque (000800-28a)**

5. Install both axle shafts and tighten the mounting screws (**E-Fig.5**) to the prescribed tightening torque:
axle shaft screws: **tightening torque (000800-19a)**

6. Connect the oil temperature sensor cable (**F-Fig.5**).

- Install the upholstery panel, previously removed, to the front boot **(080605)**.

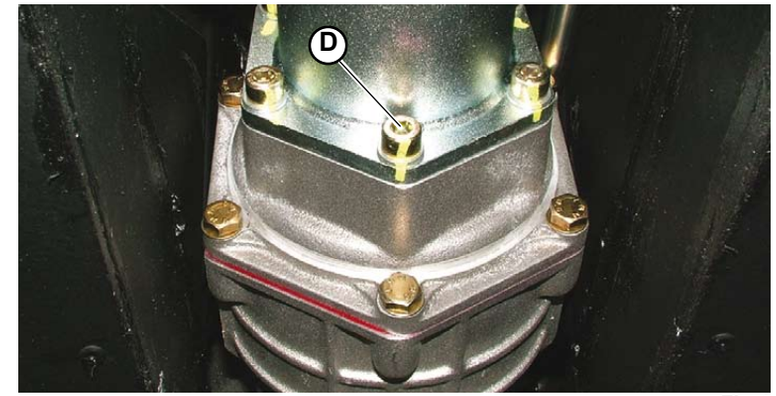

Fig.4

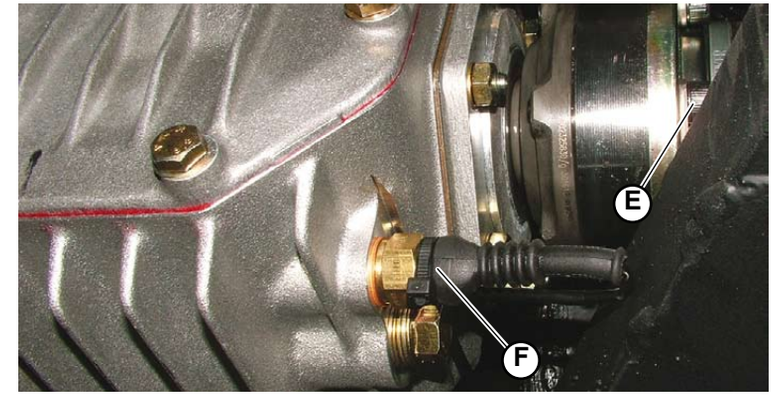

Fig.5

® Automobili Lamborghini S.p.A.
The information and procedures published below are strictly confidential and exclusively for the Lamborghini Dealer Network and Authorized Service Points. All copyrights are property of Automobili Lamborghini S.p.A based on copyright law. All of the PDF chapters in the WEB workshop manuals described below are based on information available at the time of publication. The company reserves the right to make updates and modifications. The following are prohibited: reprinting, reproduction, forwarding to unauthorized people and/or third parties, and translation, including partial, without written authorization from Automobili Lamborghini S.p.A.

Front differential oil substitution

- Remove the drain plug (**A-Fig.1**) and allow the differential oil to drain out; clean the plug and then tighten it.
- Pour in oil of the prescribed type through the filler until the oil level (**B-Fig.1**) reaches the lower edge of the filler.

Front differential oil Type	(000300)

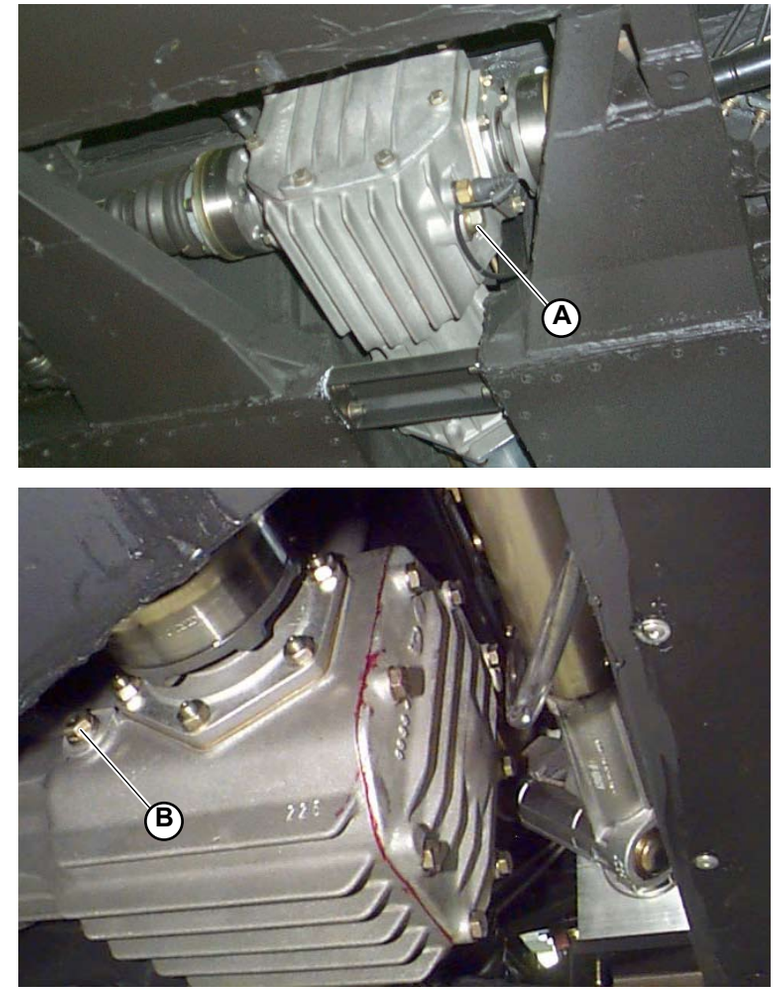

Fig.1

® Automobili Lamborghini S.p.A.
The information and procedures published below are strictly confidential and exclusively for the Lamborghini Dealer Network and Authorized Service Points. All copyrights are property of Automobili Lamborghini S.p.A based on copyright law. All of the PDF chapters in the WEB workshop manuals described below are based on information available at the time of publication. The company reserves the right to make updates and modifications. The following are prohibited: reprinting, reproduction, forwarding to unauthorized people and/or third parties, and translation, including partial, without written authorization from Automobili Lamborghini S.p.A.

Front differential overhaul

CAUTION

Use suitable tools for handling the assembly.
Make sure that the assembly is correctly fastened and stable to prevent it from tipping over or falling.

STOP **The assembly can be fastened to a vice using the mounting bracket removed with the assembly; otherwise, by means of suitable supports, the stud bolts in the carrier top part can be used.**

- Loosen the mounting screws and remove the differential carrier cover.
- Unscrew the mounting nuts and remove the hub with the adjustment shims (**A-Fig.1**); repeat the operation on the other side.

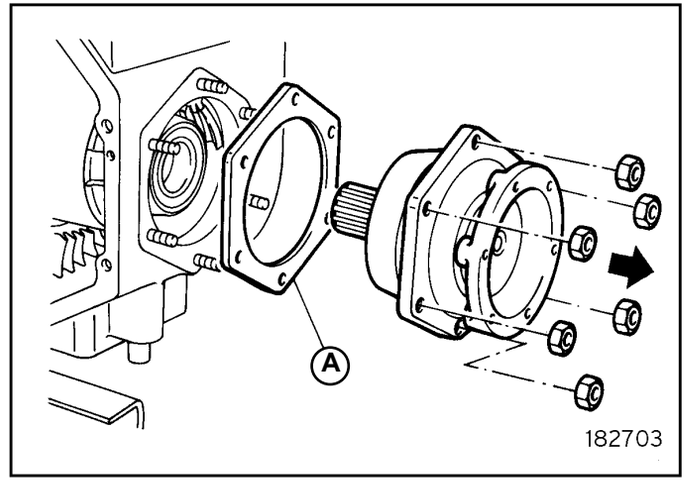

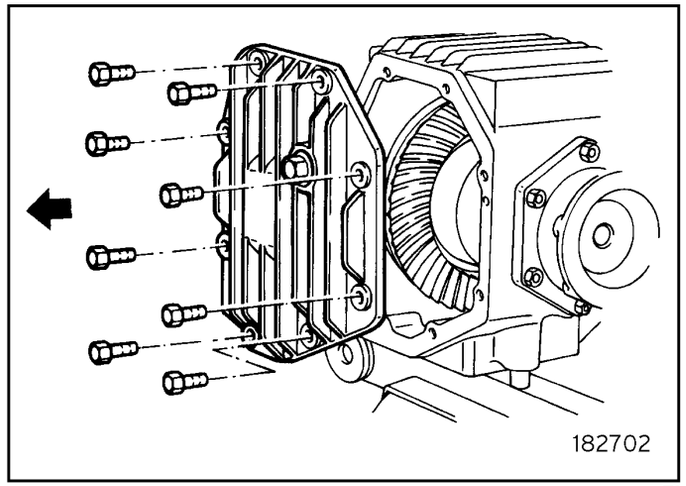

Fig.1

® Automobili Lamborghini S.p.A.
The information and procedures published below are strictly confidential and exclusively for the Lamborghini Dealer Network and Authorized Service Points. All copyrights are property of Automobili Lamborghini S.p.A based on copyright law. All of the PDF chapters in the WEB workshop manuals described below are based on information available at the time of publication. The company reserves the right to make updates and modifications. The following are prohibited: reprinting, reproduction, forwarding to unauthorized people and/or third parties, and translation, including partial, without written authorization from Automobili Lamborghini S.p.A.

- Remove the crown-planetary gear assembly from the differential carrier.

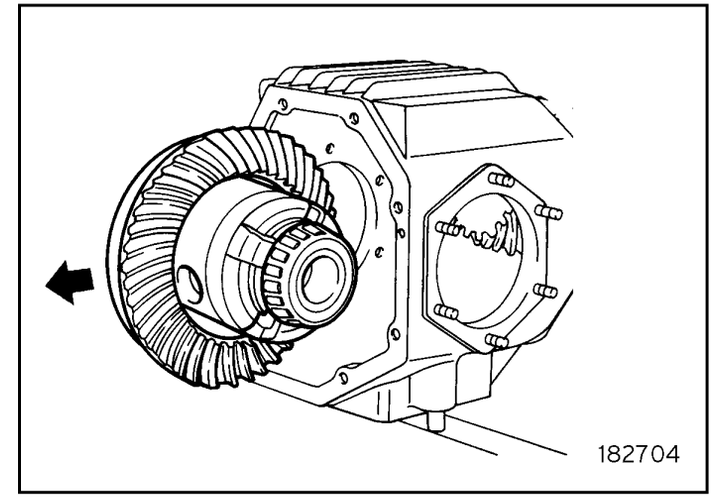

Fig.2

- Straighten the caulking of the ring nut and remove the ring nut (**E-Fig.3**).
- Remove the inner ring (**D-Fig.3**) of the transmission side bearing.
- Remove the pinion (**G-Fig.3**) with its inner bearing (**F-Fig.3**), spacer (**B-Fig.3**) and adjusting shim (**A-Fig.3**) from inside the differential carrier (**C-Fig.3**).
- Remove both the roller bearing rings by means of a punch.

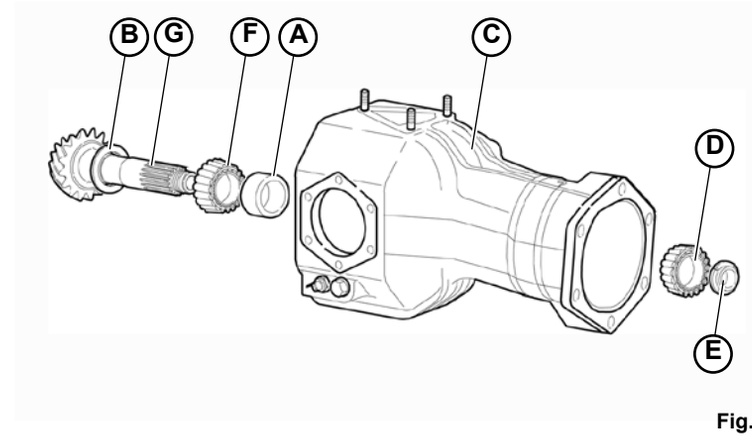

Fig.3

® Automobili Lamborghini S.p.A.
The information and procedures published below are strictly confidential and exclusively for the Lamborghini Dealer Network and Authorized Service Points. All copyrights are property of Automobili Lamborghini S.p.A based on copyright law. All of the PDF chapters in the WEB workshop manuals described below are based on information available at the time of publication. The company reserves the right to make updates and modifications. The following are prohibited: reprinting, reproduction, forwarding to unauthorized people and/or third parties, and translation, including partial, without written authorization from Automobili Lamborghini S.p.A.

- Remove the snap ring, the spacer ring and the axle shaft flange (**Fig.4**); repeat the operation on the other hub.

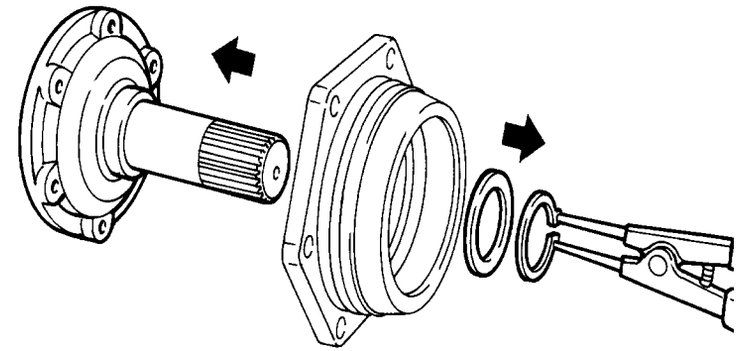

Fig.4

- Remove the seal (**Fig.5**); repeat the operation on the other hub.

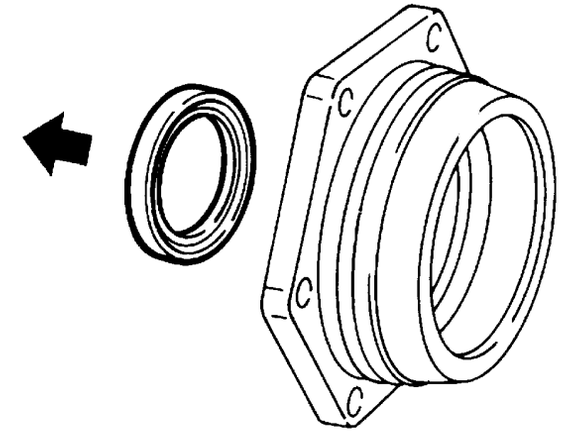

Fig.5

® Automobili Lamborghini S.p.A.
The information and procedures published below are strictly confidential and exclusively for the Lamborghini Dealer Network and Authorized Service Points. All copyrights are property of Automobili Lamborghini S.p.A based on copyright law. All of the PDF chapters in the WEB workshop manuals described below are based on information available at the time of publication. The company reserves the right to make updates and modifications. The following are prohibited: reprinting, reproduction, forwarding to unauthorized people and/or third parties, and translation, including partial, without written authorization from Automobili Lamborghini S.p.A.

- Remove the ball bearing snap ring (**Fig.6**); repeat the operation on the other hub.

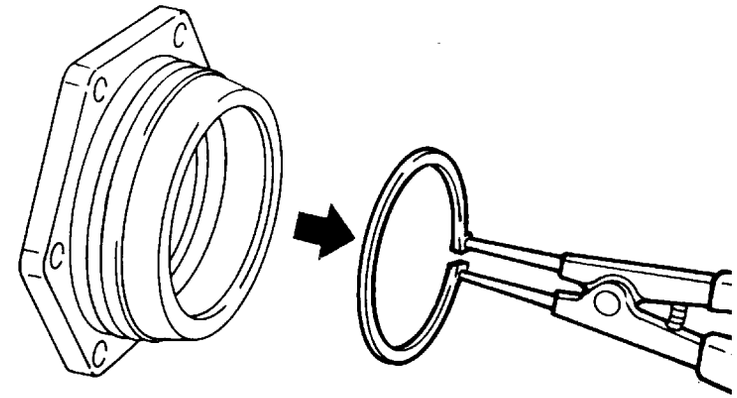

Fig.6

- Use a suitable pad on the ball bearing to remove the roller bearing outer ring and the ball bearing; remove the retaining O-ring (**Fig.7**); repeat the operation on the other hub.
- Clean accurately all components.

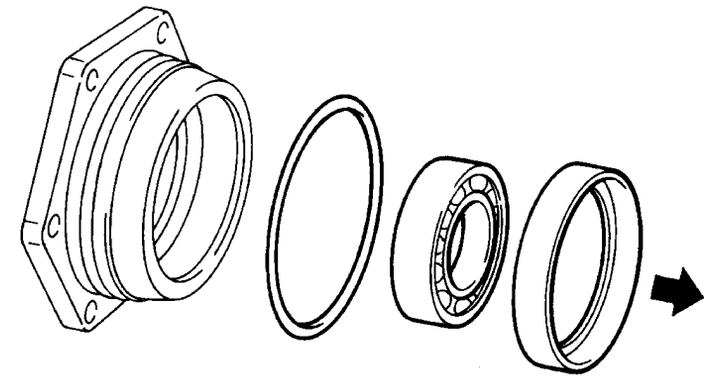

Fig.7

® Automobili Lamborghini S.p.A.
The information and procedures published below are strictly confidential and exclusively for the Lamborghini Dealer Network and Authorized Service Points. All copyrights are property of Automobili Lamborghini S.p.A based on copyright law. All of the PDF chapters in the WEB workshop manuals described below are based on information available at the time of publication. The company reserves the right to make updates and modifications. The following are prohibited: reprinting, reproduction, forwarding to unauthorized people and/or third parties, and translation, including partial, without written authorization from Automobili Lamborghini S.p.A.

- Check that the bearings are in good conditions, without traces of overheating and that the races, the turning parts or the cages are not damaged
- Check that the threading and the grooved profiles are not dented or scratched
- Install the O-ring, the ball bearing and then the roller bearing outer ring on the hub (**Fig.8**); repeat the operation on the other hub.
- Install the ball bearing snap ring; repeat the operation on the other hub.

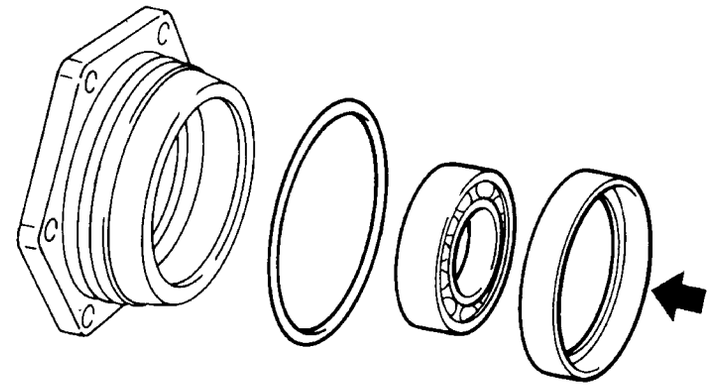

Fig.8

- Use a suitable pad to install the seal (**Fig.9**); repeat the operation on the other hub.

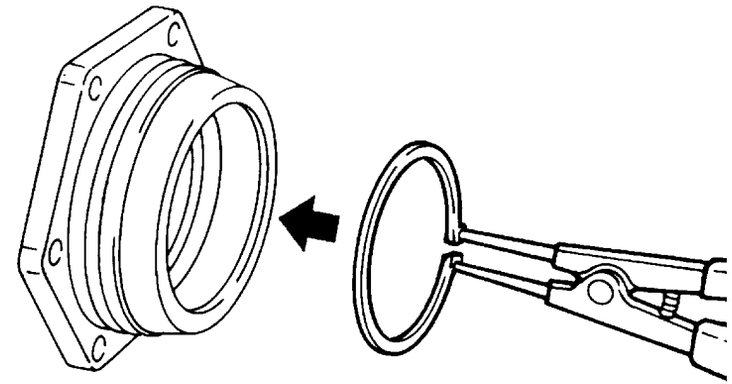

Fig.9

® Automobili Lamborghini S.p.A.
The information and procedures published below are strictly confidential and exclusively for the Lamborghini Dealer Network and Authorized Service Points. All copyrights are property of Automobili Lamborghini S.p.A based on copyright law. All of the PDF chapters in the WEB workshop manuals described below are based on information available at the time of publication. The company reserves the right to make updates and modifications. The following are prohibited: reprinting, reproduction, forwarding to unauthorized people and/or third parties, and translation, including partial, without written authorization from Automobili Lamborghini S.p.A.

STOP Respect the ring direction: A inner side, B outer side.

- Install the spacer ring and the axle shaft flange and fasten by means of the snap ring (**Fig.10**); repeat the operation on the other hub.

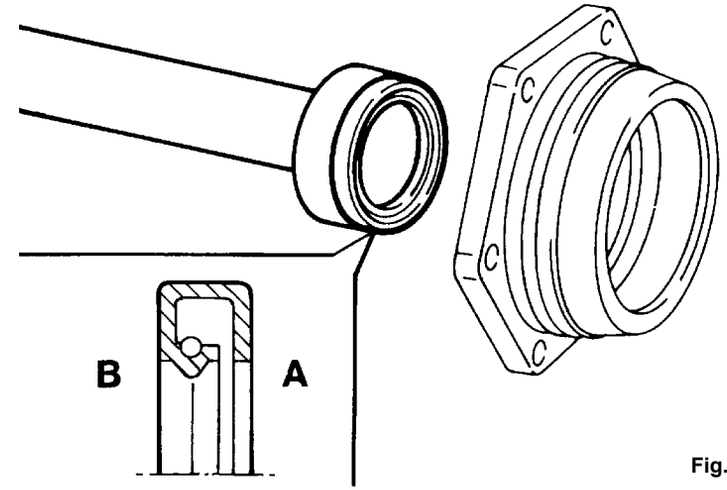

Fig.10

- Use a suitable puller and introduce a spacer to remove the roller bearing (**Fig.11**); repeat the operation on the other side.

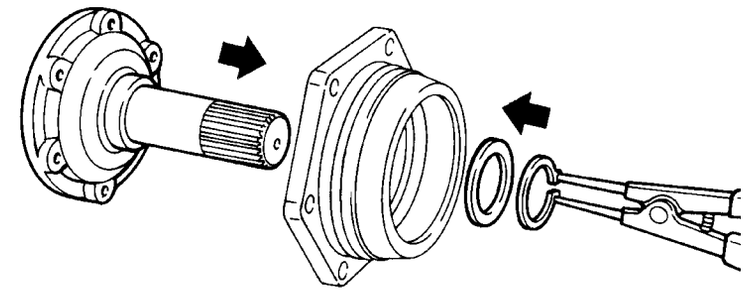

Fig.11

® Automobili Lamborghini S.p.A.
The information and procedures published below are strictly confidential and exclusively for the Lamborghini Dealer Network and Authorized Service Points. All copyrights are property of Automobili Lamborghini S.p.A based on copyright law. All of the PDF chapters in the WEB workshop manuals described below are based on information available at the time of publication. The company reserves the right to make updates and modifications. The following are prohibited: reprinting, reproduction, forwarding to unauthorized people and/or third parties, and translation, including partial, without written authorization from Automobili Lamborghini S.p.A.

- Unscrew the mounting screws and remove the crown from the planetary gear set.

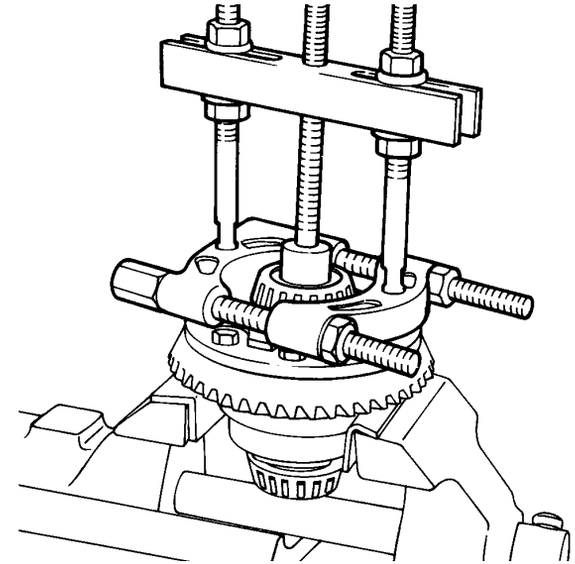

Fig.12

STOP **The planetary gear set cannot be disassembled.**
In case of failure, replace the whole set.

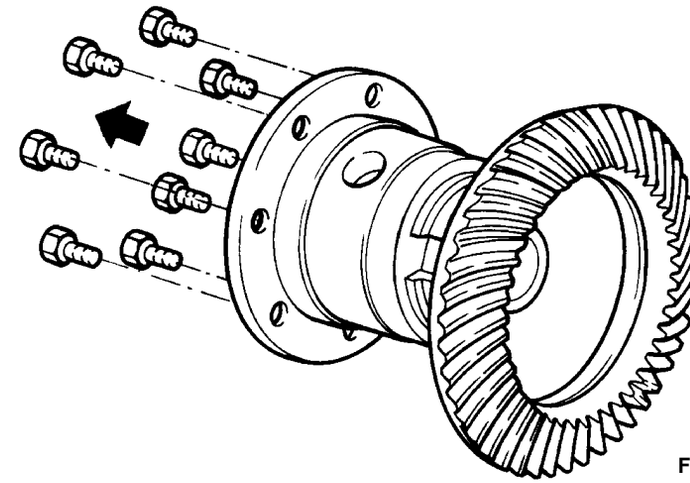

Fig.13

® Automobili Lamborghini S.p.A.
The information and procedures published below are strictly confidential and exclusively for the Lamborghini Dealer Network and Authorized Service Points. All copyrights are property of Automobili Lamborghini S.p.A based on copyright law. All of the PDF chapters in the WEB workshop manuals described below are based on information available at the time of publication. The company reserves the right to make updates and modifications. The following are prohibited: reprinting, reproduction, forwarding to unauthorized people and/or third parties, and translation, including partial, without written authorization from Automobili Lamborghini S.p.A.

- Clean accurately all components.
- Check that the crown tooth profile surfaces are not cracked or scratched.
- Check that the bearings are in good conditions, without traces of overheating and that the races, the turning parts or the cages are not damaged.
- Check that the threading and the grooved profiles are not dented or scratched.

STOP **Always replace the corresponding crown or the pinion after replacing the pinion or the crown.**

- Introduce the crown on the planetary gear set and apply medium strength thread stop Loctite 52A43 and fasten the mounting screws in a crossed order to the prescribed tightening torque:
  crown screws: **tightening torque (000800-6a)**
- Use a suitable pad to install the roller bearing; repeat the operation on the other side.

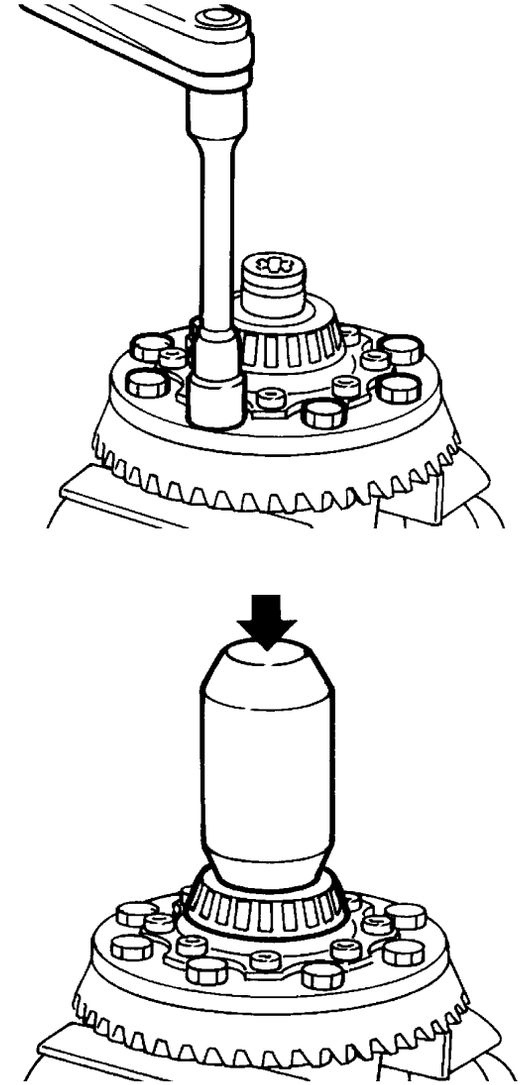

Fig.14

® Automobili Lamborghini S.p.A.
The information and procedures published below are strictly confidential and exclusively for the Lamborghini Dealer Network and Authorized Service Points. All copyrights are property of Automobili Lamborghini S.p.A based on copyright law. All of the PDF chapters in the WEB workshop manuals described below are based on information available at the time of publication. The company reserves the right to make updates and modifications. The following are prohibited: reprinting, reproduction, forwarding to unauthorized people and/or third parties, and translation, including partial, without written authorization from Automobili Lamborghini S.p.A.

- Use a suitable puller to remove the inner bearing from the pinion. (**Fig.15**).
- Clean accurately all components.
- Check that the pinion tooth profile surfaces are not cracked or scratched.
- Check that the pinion bearings are in good conditions, without traces of overheating and that the races, the turning parts or the cages are not damaged.

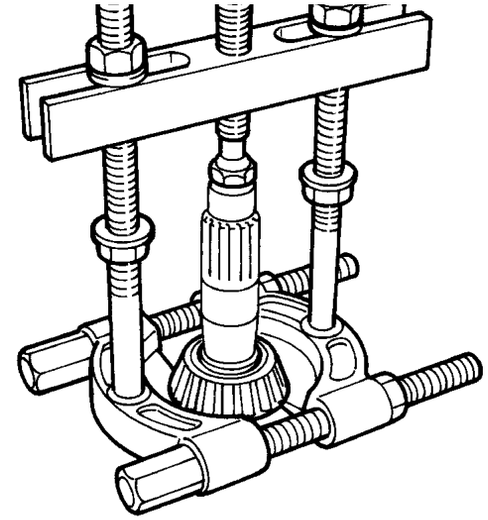

Fig.15

- Use a suitable pad to install the adjusting shim and the inner bearing on the pinion (**Fig.16**).

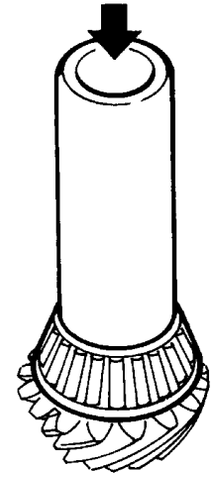

Fig.16

® Automobili Lamborghini S.p.A.
The information and procedures published below are strictly confidential and exclusively for the Lamborghini Dealer Network and Authorized Service Points. All copyrights are property of Automobili Lamborghini S.p.A based on copyright law. All of the PDF chapters in the WEB workshop manuals described below are based on information available at the time of publication. The company reserves the right to make updates and modifications. The following are prohibited: reprinting, reproduction, forwarding to unauthorized people and/or third parties, and translation, including partial, without written authorization from Automobili Lamborghini S.p.A.

Disassembling the front anti-roll bar

Preliminary operations

- Lift the vehicle on the car lift **(000000)**.
- Remove both front wheels **(060103).**

Disassembling the anti-roll bar

1. Remove the two mounting bolts (**A-Fig.1**).
2. Remove the bolt (**B-Fig.1**) and disassemble the connecting rod.

Repeat the two steps above on both sides (right/left) of the anti-roll bar.

3. Remove the anti-roll bar.

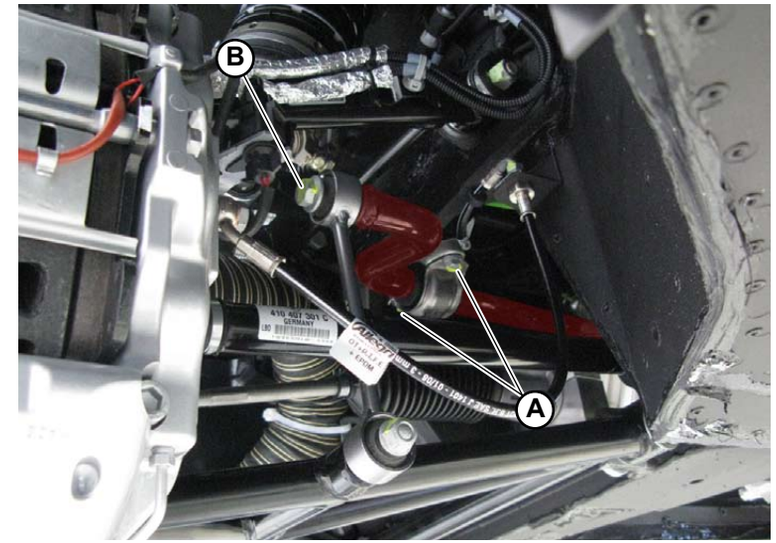

Fig.1

® Automobili Lamborghini S.p.A.
The information and procedures published below are strictly confidential and exclusively for the Lamborghini Dealer Network and Authorized Service Points. All copyrights are property of Automobili Lamborghini S.p.A based on copyright law. All of the PDF chapters in the WEB workshop manuals described below are based on information available at the time of publication. The company reserves the right to make updates and modifications. The following are prohibited: reprinting, reproduction, forwarding to unauthorized people and/or third parties, and translation, including partial, without written authorization from Automobili Lamborghini S.p.A.

Assembling the front anti-roll bar

1. Position the anti-roll bar and tighten the two mounting bolts (**A-Fig.1**).
   Bolt attachment: **tightening torque (000800).**
2. Assemble the connecting rod and tighten the bolt (**B-Fig.1**).

Repeat the two steps above on both sides (right/left) of the anti-roll bar.

- Assemble the front wheels **(060105)**.

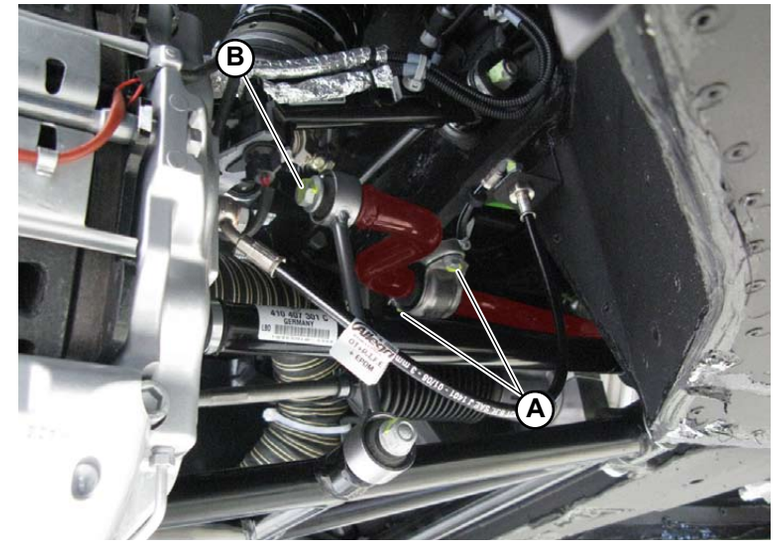

Fig.1

® Automobili Lamborghini S.p.A.
The information and procedures published below are strictly confidential and exclusively for the Lamborghini Dealer Network and Authorized Service Points. All copyrights are property of Automobili Lamborghini S.p.A based on copyright law. All of the PDF chapters in the WEB workshop manuals described below are based on information available at the time of publication. The company reserves the right to make updates and modifications. The following are prohibited: reprinting, reproduction, forwarding to unauthorized people and/or third parties, and translation, including partial, without written authorization from Automobili Lamborghini S.p.A.

Front springs check

STOP **Check the tightening torques (000800) and the integrity of the suspension arms regularly.**

® Automobili Lamborghini S.p.A.
The information and procedures published below are strictly confidential and exclusively for the Lamborghini Dealer Network and Authorized Service Points. All copyrights are property of Automobili Lamborghini S.p.A based on copyright law. All of the PDF chapters in the WEB workshop manuals described below are based on information available at the time of publication. The company reserves the right to make updates and modifications. The following are prohibited: reprinting, reproduction, forwarding to unauthorized people and/or third parties, and translation, including partial, without written authorization from Automobili Lamborghini S.p.A.

Front suspension disassembly

Preliminary operations

- Lift the vehicle on the car lift **(000000)**.
- Disassemble the wheel **(060103)**.
- Disassemble the wheel arch **(082103)**.
- Remove the ABS caliper connectors and the pad thickness sensor.
- Disassemble the caliper (do not remove the oil connection since the caliper can be set laterally to the block) **(060703)**.
- Remove the lifting system's pipe.
- Disassemble the shock absorber **(041303)**.

Suspension disassembly

1. Disassemble the connecting rod of the stabilizer bar (A-**Fig.1**).
2. Disassemble the air pipe (B-**Fig.1**).

- Disconnect the axle shaft from the front differential **(040103)**.
- Unscrew the head of the power steering arm.

STOP **Before disassembling the suspension arms, the position of the shims in the arms must be marked so that they may be repositioned in the same place during reassembly.**

3. Unscrew the two upper bolts and the two lower bolts that secure the suspension arms (**C-Fig.1/2**).

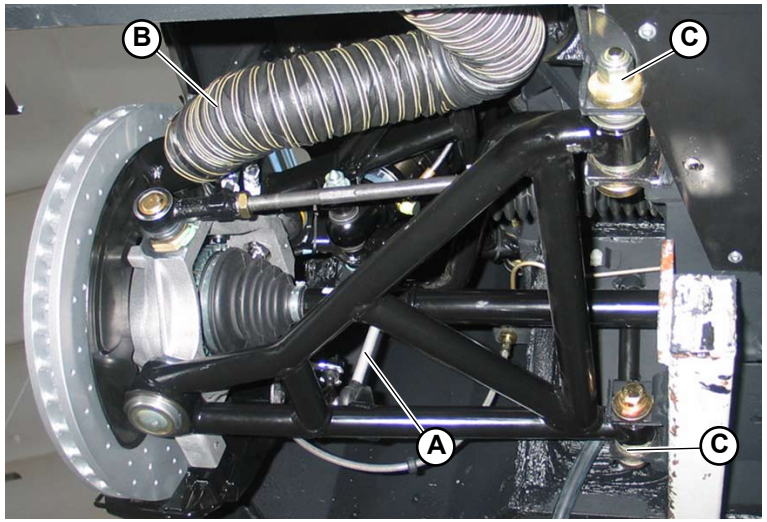

Fig.1

Fig.2

® Automobili Lamborghini S.p.A.
The information and procedures published below are strictly confidential and exclusively for the Lamborghini Dealer Network and Authorized Service Points. All copyrights are property of Automobili Lamborghini S.p.A based on copyright law. All of the PDF chapters in the WEB workshop manuals described below are based on information available at the time of publication. The company reserves the right to make updates and modifications. The following are prohibited: reprinting, reproduction, forwarding to unauthorized people and/or third parties, and translation, including partial, without written authorization from Automobili Lamborghini S.p.A.

Front suspension assembly

1. Tighten the two upper bolts and the two lower bolts that secure the suspension arms (**A-Fig.1/2**).

STOP **Reassemble the arms, positioning the shims in the same place prior to disassembly.**

- Tighten the head of the power steering arm.
- Connect the axle shaft to the front differential **(040105)**.

2. Assemble the air pipe (**B-Fig.1**).
3. Assemble the connecting rod of the stabilizer bar (**C-Fig.1**).

- Assemble the shock absorber **(041305)**.
- Attach the lifting system's pipe.
- Assemble the caliper **(060705)**.
- Attach the ABS caliper connectors and the pad thickness sensor.
- Assemble the wheel arch **(082105)**.
- Assemble the wheel **(060105)**.

STOP **After assembling the suspensions, the wheels must be aligned (cam position modification) so that the correct toe-in and caster is restored.**

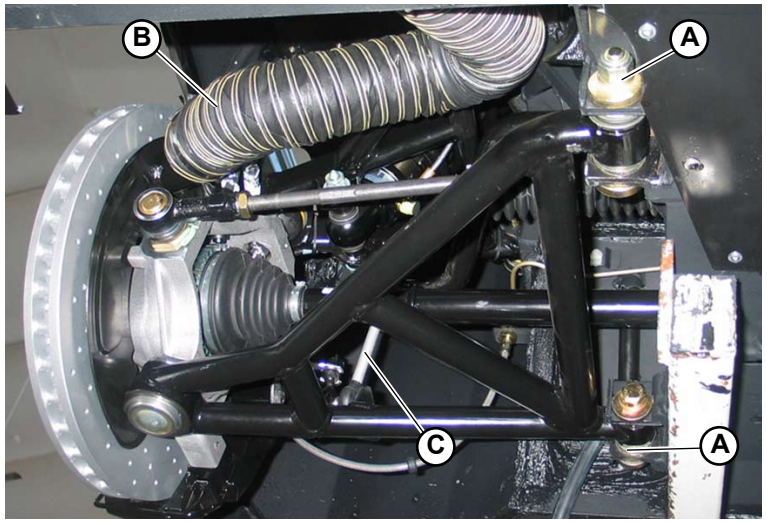

Fig.1

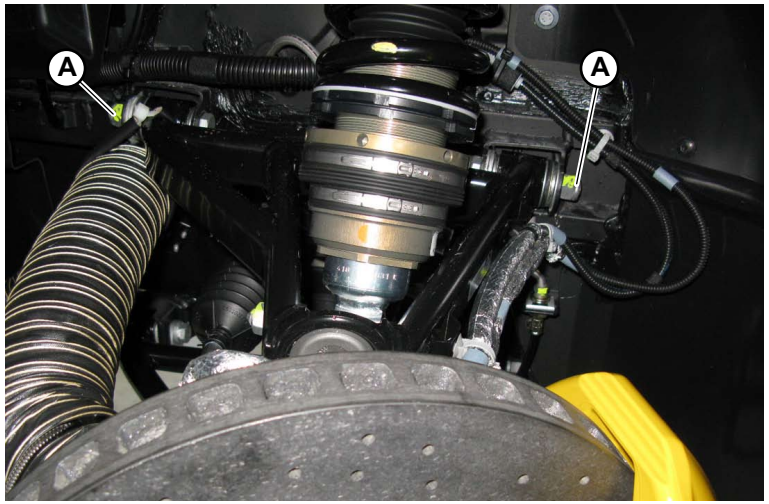

Fig.2

® Automobili Lamborghini S.p.A.
The information and procedures published below are strictly confidential and exclusively for the Lamborghini Dealer Network and Authorized Service Points. All copyrights are property of Automobili Lamborghini S.p.A based on copyright law. All of the PDF chapters in the WEB workshop manuals described below are based on information available at the time of publication. The company reserves the right to make updates and modifications. The following are prohibited: reprinting, reproduction, forwarding to unauthorized people and/or third parties, and translation, including partial, without written authorization from Automobili Lamborghini S.p.A.

Shock absorber disassembly

Preliminary operations

- Lift the vehicle on the car lift **(000000)**.
- Disassemble the wheel **(060103)**.

Shock absorber disassembly

1. Disconnect the lifting system's pipe (**A-Fig.1**) from the shock absorber.
2. Free the shock absorber (**B-Fig.1**) on the wheel by unscrewing the two bolts (**C-Fig.1**) (one upper and one lower).
3. Remove the shock absorber.

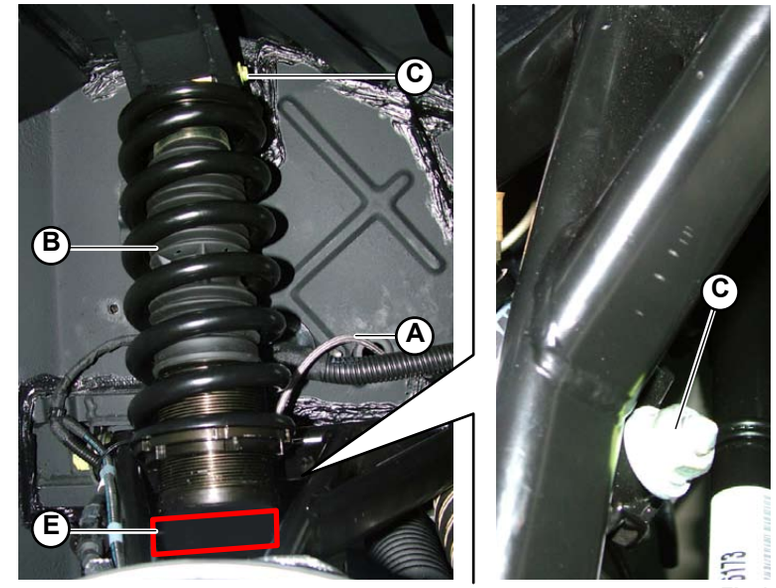

Fig.1

The vehicle is equipped with two shock absorbers for each rear wheel and one shock absorber for each front wheel.

Once the shock absorber has been disassembled, free it from the spring:

4. Place the shock absorber on the special tool for freeing it from the spring.
5. Compress the spring.
6. Remove the stops (**D-Fig.2**) on the shock absorber.
7. Extract the spring.

Fig.2

There are three types of Blistein shock absorbers:
- **Standard**
- **Comfort**
- **Sport**

To identify the type, check the part number printed on the shock absorber (E-Fig.1).

® Automobili Lamborghini S.p.A.
The information and procedures published below are strictly confidential and exclusively for the Lamborghini Dealer Network and Authorized Service Points. All copyrights are property of Automobili Lamborghini S.p.A based on copyright law. All of the PDF chapters in the WEB workshop manuals described below are based on information available at the time of publication. The company reserves the right to make updates and modifications. The following are prohibited: reprinting, reproduction, forwarding to unauthorized people and/or third parties, and translation, including partial, without written authorization from Automobili Lamborghini S.p.A.

Shock absorber assembly

To assemble the spring on the shock absorber:

1. Place the shock absorber on the special tool for inserting the spring.
2. Insert the spring.
3. Compress the spring until it can be secured onto the shock absorber with the provided stop (**A-Fig.1**).
4. Adjust the spring's rigidity using the threaded ring nut (**B-Fig.1**).

Fig.1

STOP

- **When the spring is assembled the ring nut must be placed in the same position as the spring at the time of disassembly.**
- **If the shock absorbers of both front wheels are disassembled, always reassemble the springs onto the same shock absorbers that they were on before disassembly.**

Assemble the shock absorber with the vehicle raised on the car lift, using the following procedure:

1. Assemble the shock absorber (**C-Fig.2**), locking it into place with the two special bolts (**D-Fig.2/3**) (one upper and one lower).
2. Connect the lifting system's pipe (**E-Fig.2**) onto the shock absorber.

- Assemble the wheel **(060105)**.

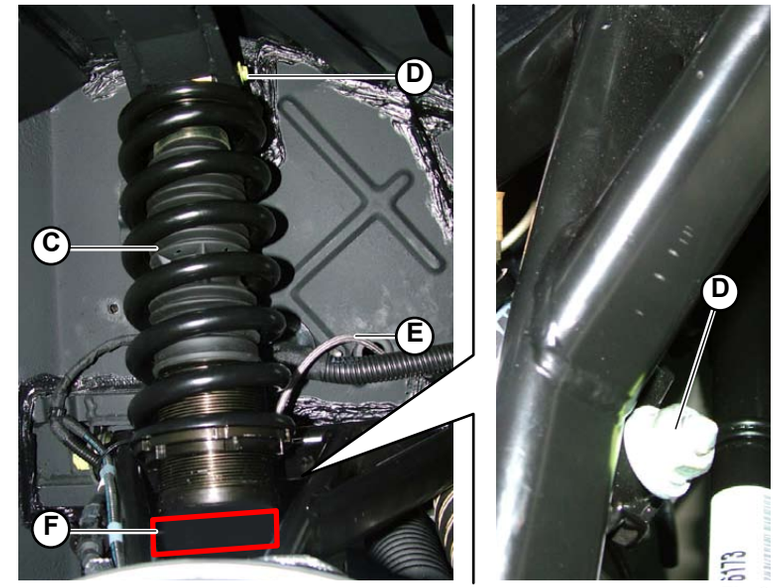

Fig.2

The vehicle is equipped with two shock absorbers for each rear wheel and one shock absorber for each front wheel.

There are three types of Blistein shock absorbers:
- **Standard**
- **Comfort**
- **Sport**

To identify the type, check the part number printed on the shock absorber (F-Fig.2).

® Automobili Lamborghini S.p.A.
The information and procedures published below are strictly confidential and exclusively for the Lamborghini Dealer Network and Authorized Service Points. All copyrights are property of Automobili Lamborghini S.p.A based on copyright law. All of the PDF chapters in the WEB workshop manuals described below are based on information available at the time of publication. The company reserves the right to make updates and modifications. The following are prohibited: reprinting, reproduction, forwarding to unauthorized people and/or third parties, and translation, including partial, without written authorization from Automobili Lamborghini S.p.A.

Steering check

Check regularly the tightening torques (000800), the integrity of the steering parts, joint guards, steering rack boots, steering lever boots and axle shaft boots.

® Automobili Lamborghini S.p.A.
The information and procedures published below are strictly confidential and exclusively for the Lamborghini Dealer Network and Authorized Service Points. All copyrights are property of Automobili Lamborghini S.p.A based on copyright law. All of the PDF chapters in the WEB workshop manuals described below are based on information available at the time of publication. The company reserves the right to make updates and modifications. The following are prohibited: reprinting, reproduction, forwarding to unauthorized people and/or third parties, and translation, including partial, without written authorization from Automobili Lamborghini S.p.A.

Steering wheel position (Fig.1)

STEP 1:

$$\frac{\text{right side rotation + left side rotation}}{2}$$

STEP 2:

Check that the steering wheel is in central position;
if it is not, remove and refit in the correct position.

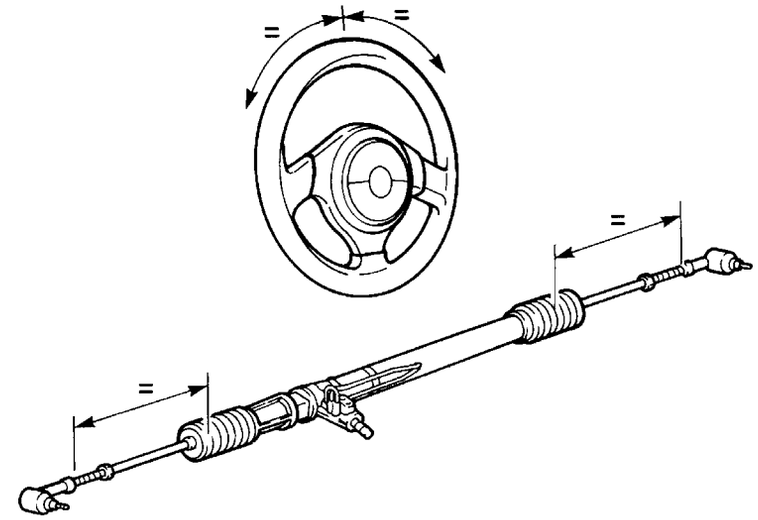

44_18

Fig.1

® Automobili Lamborghini S.p.A.
The information and procedures published below are strictly confidential and exclusively for the Lamborghini Dealer Network and Authorized Service Points. All copyrights are property of Automobili Lamborghini S.p.A based on copyright law. All of the PDF chapters in the WEB workshop manuals described below are based on information available at the time of publication. The company reserves the right to make updates and modifications. The following are prohibited: reprinting, reproduction, forwarding to unauthorized people and/or third parties, and translation, including partial, without written authorization from Automobili Lamborghini S.p.A.

This section explains how to disassemble:
A) Disassembling the steering rack
B) Disassembling the steering column

A) Disassembling the steering rack

Preliminary operations

- Raise the car on the car lift **(000000).**
- Remove the front wheels **(060103).**

Steering rack disassembly

1. Unscrew the ball joints (**A-Fig.1**) on both front wheels (one ball joint for each wheel).
2. Disconnect the oil delivery pipe (**B-Fig.2**) and the oil return pipe (**C-Fig.2**).
3. To disassemble the two U-bolts (**D-Fig.3**) securing the steering rack, unscrew the 4 screws securing them (2 screws for each U-bolt).
4. Turn on the screw (**E-Fig.4**) to disconnect the connection between the steering box and steering wheel (or cross member).
5. Extract the steering rack on the same side as the disassembled wheel.

Fig.1

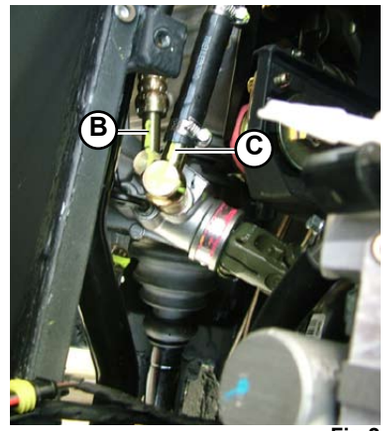

Fig.2

Fig.3

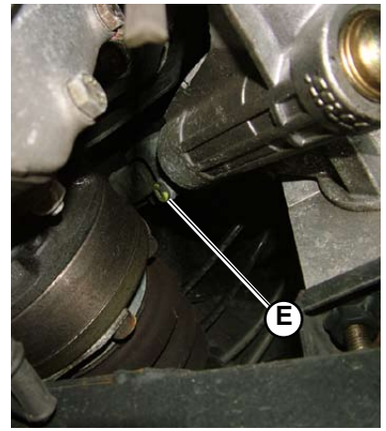

Fig.4

® Automobili Lamborghini S.p.A.
The information and procedures published below are strictly confidential and exclusively for the Lamborghini Dealer Network and Authorized Service Points. All copyrights are property of Automobili Lamborghini S.p.A based on copyright law. All of the PDF chapters in the WEB workshop manuals described below are based on information available at the time of publication. The company reserves the right to make updates and modifications. The following are prohibited: reprinting, reproduction, forwarding to unauthorized people and/or third parties, and translation, including partial, without written authorization from Automobili Lamborghini S.p.A.

B) Disassembling the steering column

Preliminary operations

- Disassemble the steering wheel cover **(087503)**.
- Disassemble the driver airbag module **(087503)**.
- Disassemble the steering wheel **(087503)**.

Steering column disassembly

1. Unscrew the screw (**A-Fig.5**) under the steering column plate (**B-Fig.5**).
2. Push the cross element inwards.
3. Disconnect all connections (**C-Fig.6/7**) (7 connections + earth).
4. Unscrew the relative screws to disconnect the steering column bracket (**D-Fig.5**).
5. Unscrew the 2 screws (**E-Fig.5**) securing the steering column to the chassis.
6. Cut the clamps (**F-Fig.7**) on the various wiring harnesses.
7. Extract the steering column.

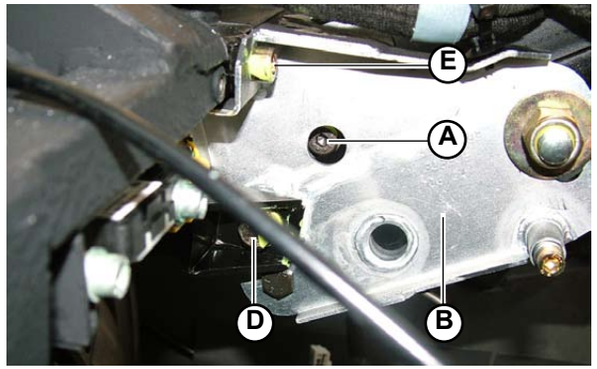

Fig.5

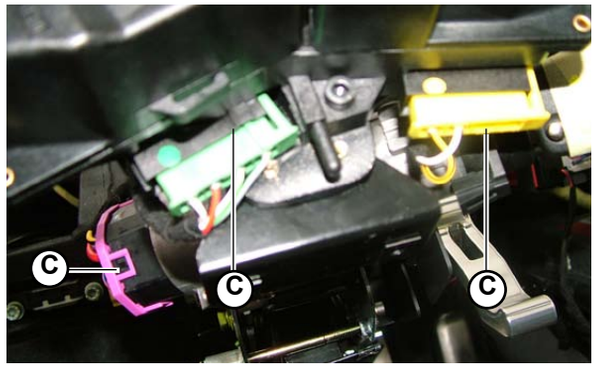

Fig.6

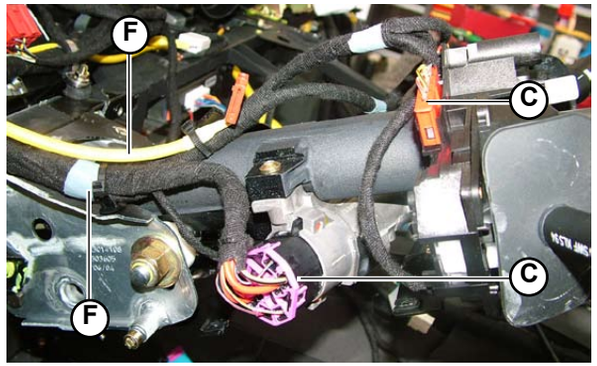

Fig.7

® Automobili Lamborghini S.p.A.
The information and procedures published below are strictly confidential and exclusively for the Lamborghini Dealer Network and Authorized Service Points. All copyrights are property of Automobili Lamborghini S.p.A based on copyright law. All of the PDF chapters in the WEB workshop manuals described below are based on information available at the time of publication. The company reserves the right to make updates and modifications. The following are prohibited: reprinting, reproduction, forwarding to unauthorized people and/or third parties, and translation, including partial, without written authorization from Automobili Lamborghini S.p.A.

This section explains how to assemble:
A) Assembling the steering rack
B) Assembling the steering column

A) Assembling the steering rack

1. Insert the steering rack on the same side as the wheel disassembled beforehand.
2. Tighten the fixing screw (**A-Fig. 1**) between the steering box and steering wheel (or cross member): **tightening torque (000800-17b)**
3. Turn on the 4 screws (2 screws for each U-bolt) to secure the two U-bolts (**B-Fig.2**): **tightening torque (000800-16c)**
4. Connect the oil delivery pipe (**C-Fig.3**) and the oil return pipe (**D-Fig.3**).
5. Screw the ball joints (**E-Fig.4**) onto both front wheels (one ball joint for each wheel).

- Assemble the front wheels **(060105).**

The car must undergo a toe-in test before returning to road use (040002).

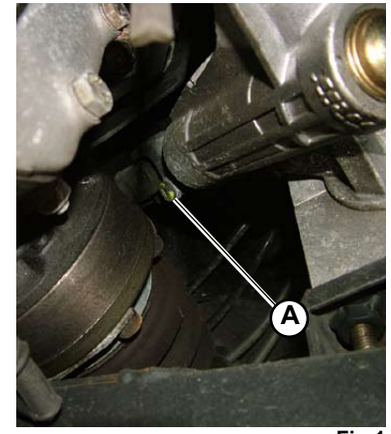

Fig.1

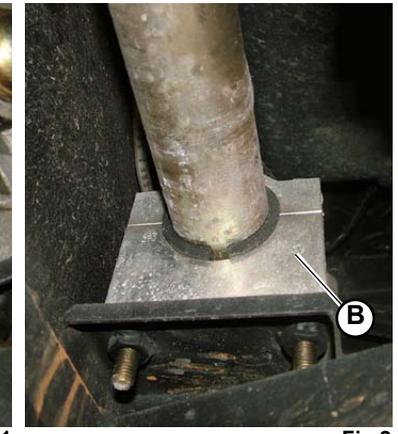

Fig.2

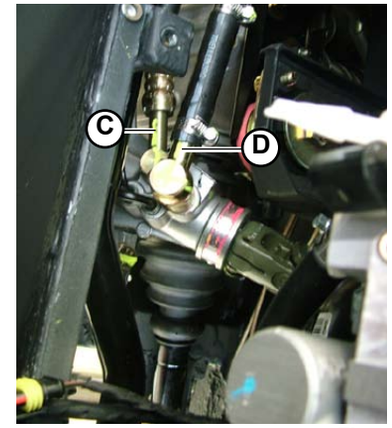

Fig.3

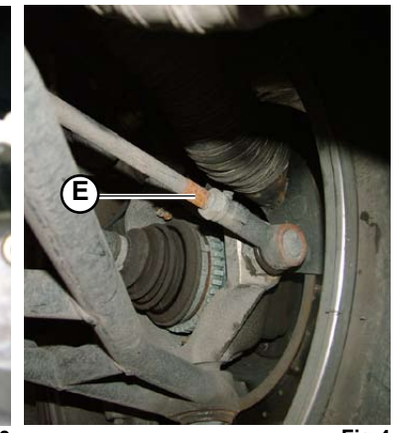

Fig.4

® Automobili Lamborghini S.p.A.
The information and procedures published below are strictly confidential and exclusively for the Lamborghini Dealer Network and Authorized Service Points. All copyrights are property of Automobili Lamborghini S.p.A based on copyright law. All of the PDF chapters in the WEB workshop manuals described below are based on information available at the time of publication. The company reserves the right to make updates and modifications. The following are prohibited: reprinting, reproduction, forwarding to unauthorized people and/or third parties, and translation, including partial, without written authorization from Automobili Lamborghini S.p.A.

B) Assembling the steering column

1. Act on the 2 relative screws **(A-Fig.5)** to fix the steering column to the chassis: **tightening torque (000800-16a)**
2. Connect all connections **(B-Fig.6/7)** (7 connections + earth).
3. Extract the cross element.
4. Act on the relative screws to secure the steering column bracket **(C-Fig.5)**.
5. Secure the screw **(D-Fig.5)** under the steering column plate **(E-Fig.5)**.
6. Use the clamps to secure the various wiring harnesses **(F-Fig.7)**.

- Assemble the steering wheel **(087505)**.
- Assemble the driver airbag module **(087505)**.
- Assemble the steering wheel cover **(087505)**.

The steering wheel needs to be centred before the car can return to road use (041902).

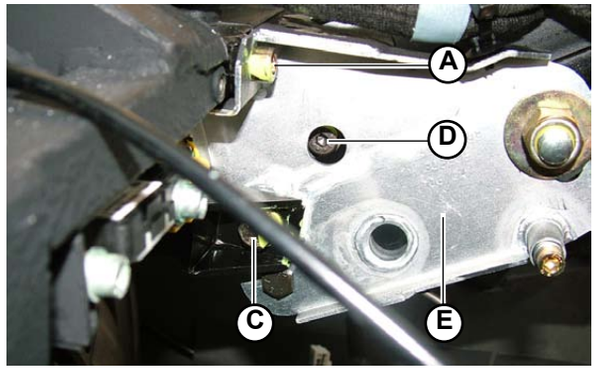

Fig.5

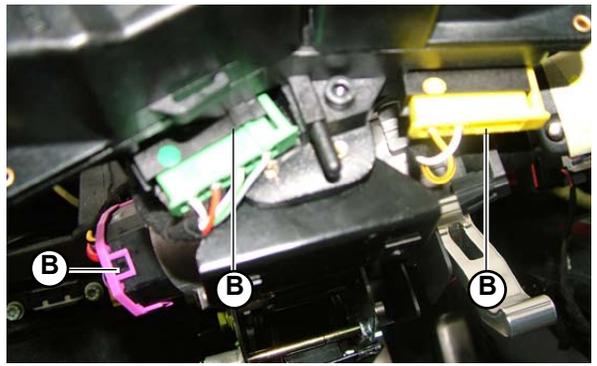

Fig.6

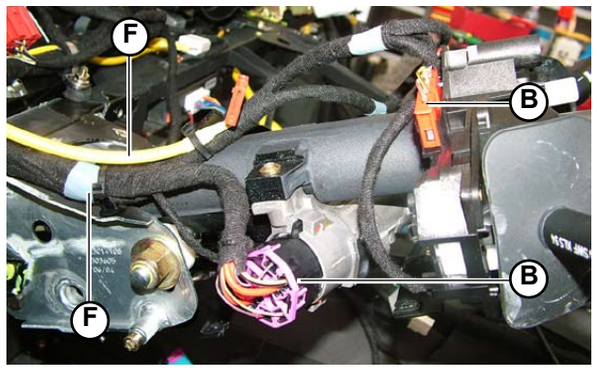

Fig.7

® Automobili Lamborghini S.p.A.
The information and procedures published below are strictly confidential and exclusively for the Lamborghini Dealer Network and Authorized Service Points. All copyrights are property of Automobili Lamborghini S.p.A based on copyright law. All of the PDF chapters in the WEB workshop manuals described below are based on information available at the time of publication. The company reserves the right to make updates and modifications. The following are prohibited: reprinting, reproduction, forwarding to unauthorized people and/or third parties, and translation, including partial, without written authorization from Automobili Lamborghini S.p.A.

Power steering oil level check

The oil level check must be performed with the lifting system deactivated.

The oil level must always be within “min” and “max.” notches on the float in the tank. Top up with the recommended oil if necessary.

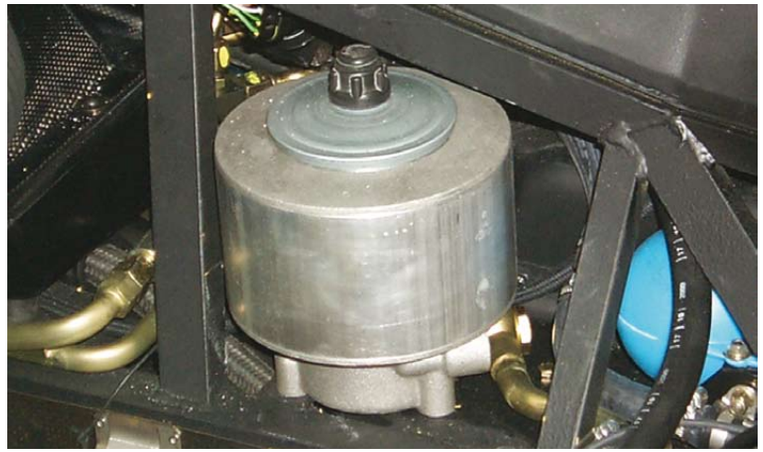

Fig.1

® Automobili Lamborghini S.p.A.
The information and procedures published below are strictly confidential and exclusively for the Lamborghini Dealer Network and Authorized Service Points. All copyrights are property of Automobili Lamborghini S.p.A based on copyright law. All of the PDF chapters in the WEB workshop manuals described below are based on information available at the time of publication. The company reserves the right to make updates and modifications. The following are prohibited: reprinting, reproduction, forwarding to unauthorized people and/or third parties, and translation, including partial, without written authorization from Automobili Lamborghini S.p.A.

Power steering disassembly

Preliminary operations

- Disassemble the silencer safety grid **(025103)**.

Power steering disassembly

1. Remove the delivery (**A-Fig.1**) and intake pipe mounting clamps on the water pump and remove the pipes (**B-Fig.1**).

NOTE
Position a container under the vehicle to collect the coolant.

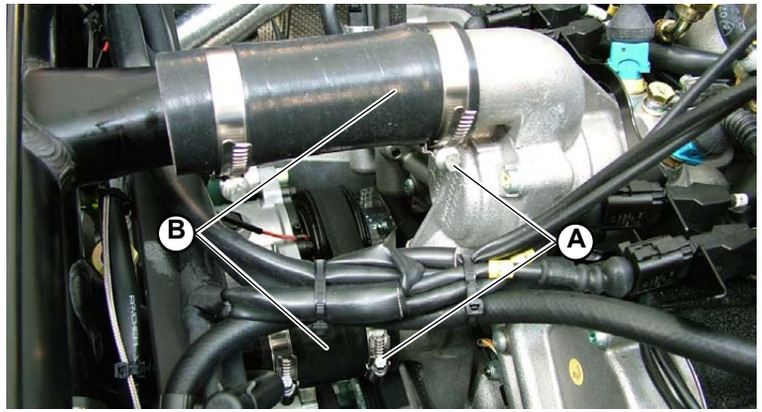

Fig.1

2. Remove the rear cross member, unscrewing the 4 screws (**C-Fig.2**) of the two inner sides.

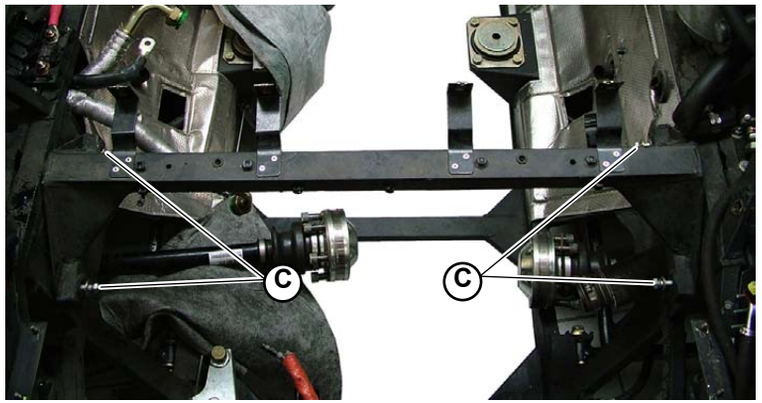

Fig.2

® Automobili Lamborghini S.p.A.
The information and procedures published below are strictly confidential and exclusively for the Lamborghini Dealer Network and Authorized Service Points. All copyrights are property of Automobili Lamborghini S.p.A based on copyright law. All of the PDF chapters in the WEB workshop manuals described below are based on information available at the time of publication. The company reserves the right to make updates and modifications. The following are prohibited: reprinting, reproduction, forwarding to unauthorized people and/or third parties, and translation, including partial, without written authorization from Automobili Lamborghini S.p.A.

3. Remove the hydraulic fluid pipes from the pump and plug them (**D-Fig.3**).

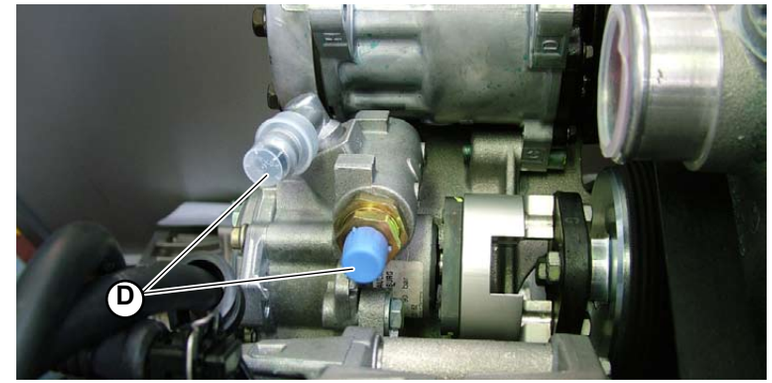

Fig.3

4. Remove the 2 screws (**E1-Fig.4**).

5. Remove the 4 pump mounting screws (**E-Fig.4**) to the support frame and remove the pump and its pulley.

NOTA
Remove the pulley by removing the 3 screws.

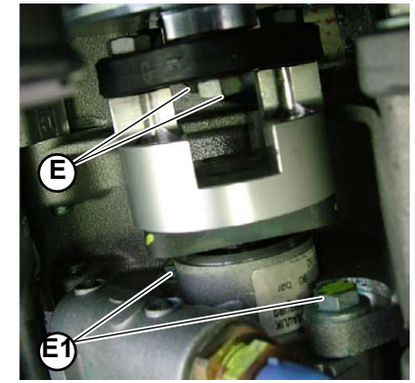

Fig.4

® Automobili Lamborghini S.p.A.
The information and procedures published below are strictly confidential and exclusively for the Lamborghini Dealer Network and Authorized Service Points. All copyrights are property of Automobili Lamborghini S.p.A based on copyright law. All of the PDF chapters in the WEB workshop manuals described below are based on information available at the time of publication. The company reserves the right to make updates and modifications. The following are prohibited: reprinting, reproduction, forwarding to unauthorized people and/or third parties, and translation, including partial, without written authorization from Automobili Lamborghini S.p.A.

Power steering assembly

1. Install the pulley on the power steering pump by means of the 3 screws.
Tighten the screws by means of medium strength Loctite.

2. Tighten the two engine side screws (**A1-Fig.1**).

3. Fasten the pump to the frame by means of the 4 screws (**A-Fig.1**).

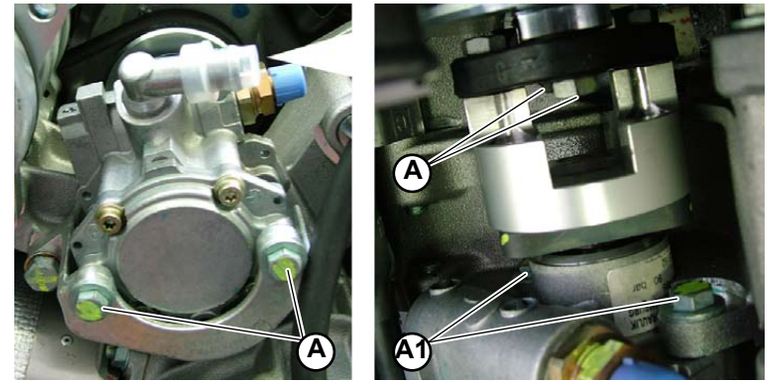

Fig.1

4. Reconnect the hydraulic fluid pipes to the pump (**B-Fig.2**); the circuit is self-bleeding; activate the Lifting System or turn the steering wheel twice to carry out the bleeding.
Tightening torque of unions; **tightening torque (000800-24a)**.

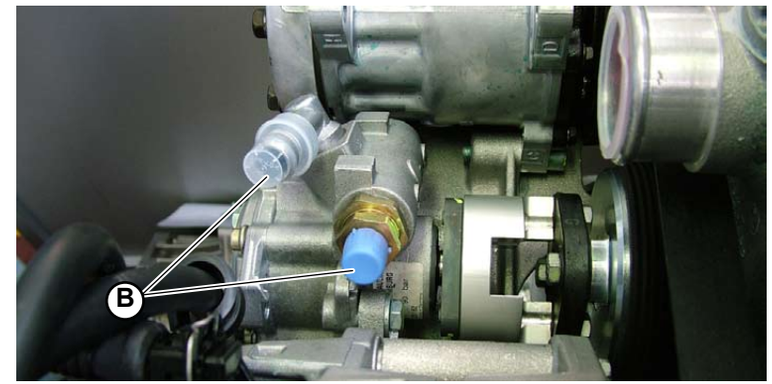

Fig.2

® Automobili Lamborghini S.p.A.
The information and procedures published below are strictly confidential and exclusively for the Lamborghini Dealer Network and Authorized Service Points. All copyrights are property of Automobili Lamborghini S.p.A based on copyright law. All of the PDF chapters in the WEB workshop manuals described below are based on information available at the time of publication. The company reserves the right to make updates and modifications. The following are prohibited: reprinting, reproduction, forwarding to unauthorized people and/or third parties, and translation, including partial, without written authorization from Automobili Lamborghini S.p.A.

5. Assemble the rear cross member, tightening the 4 screws (**C-Fig.4**) onto the two inner sides.

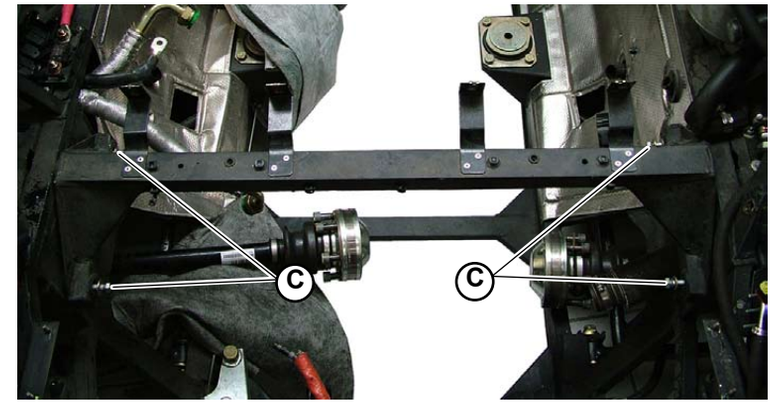

Fig.3

6. Reconnect the water pump delivery and intake pipes (**D-Fig.5**), securing them with the clamps (**E-Fig.5**).

NOTE
Top up the engine coolant **(022107)**.

- Install the silencer safety grid **(025105)**.

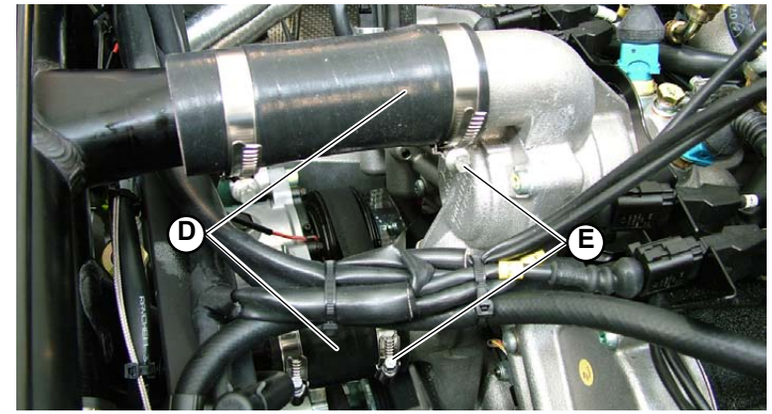

Fig.4

® Automobili Lamborghini S.p.A.
The information and procedures published below are strictly confidential and exclusively for the Lamborghini Dealer Network and Authorized Service Points. All copyrights are property of Automobili Lamborghini S.p.A based on copyright law. All of the PDF chapters in the WEB workshop manuals described below are based on information available at the time of publication. The company reserves the right to make updates and modifications. The following are prohibited: reprinting, reproduction, forwarding to unauthorized people and/or third parties, and translation, including partial, without written authorization from Automobili Lamborghini S.p.A.

Filling or topping up the power steering oil

Preliminary operations

- Disassemble the right bulkhead inside the engine compartment to access the power steering oil tank **(081303)**.

Filling or topping up the power steering oil

- Remove the cap on the power steering oil tank.
- Top up the oil level.

The oil level must always be between the MIN (A-Fig.1) and MAX (B-Fig.1) marks located inside the oil tank, while the lifting system is switched off.

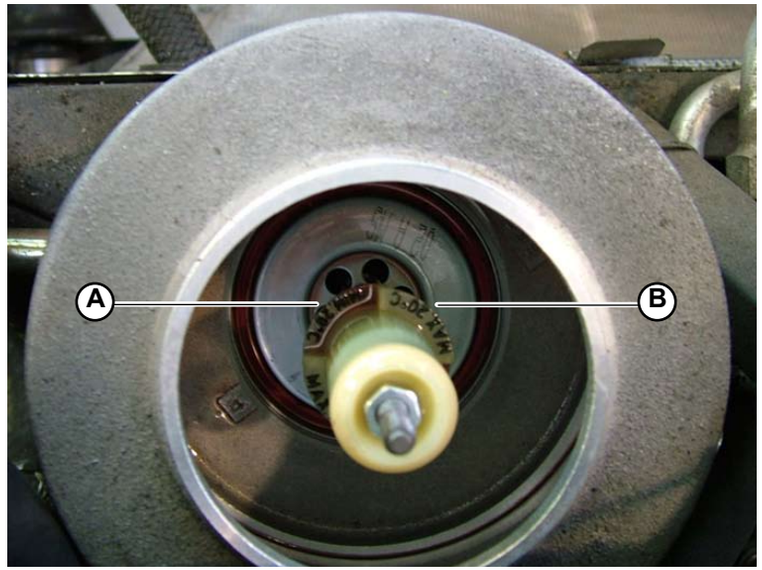

Fig.1

® Automobili Lamborghini S.p.A.
The information and procedures published below are strictly confidential and exclusively for the Lamborghini Dealer Network and Authorized Service Points. All copyrights are property of Automobili Lamborghini S.p.A based on copyright law. All of the PDF chapters in the WEB workshop manuals described below are based on information available at the time of publication. The company reserves the right to make updates and modifications. The following are prohibited: reprinting, reproduction, forwarding to unauthorized people and/or third parties, and translation, including partial, without written authorization from Automobili Lamborghini S.p.A.

Rear suspension	
Camber Rear α	- 0° 40’ ÷ - 0° 50’
Total toe-in Rear t1	0° 20’ ÷ 0° 28’
Ride height (*) Rear h1	142 ÷ 148

(*) Measured on the lower surface of the chassis at the suspensions

Independent suspensions with tubular steel arms.
Four-link rear suspensions, double wishbone front suspensions.

“Antisquat” configuration on the rear to reduce pitching during acceleration “Antidive” on the front thanks to the tilted upper arms, to prevent pitching during braking .
Coaxial springs with shock absorbers, two for each rear wheel and one for each front wheel.
Modular light alloy rims and low profile tires.
Front and rear anti-roll bars.
Front and rear bump stops built in the shock absorbers.

® Automobili Lamborghini S.p.A.
The information and procedures published below are strictly confidential and exclusively for the Lamborghini Dealer Network and Authorized Service Points. All copyrights are property of Automobili Lamborghini S.p.A based on copyright law. All of the PDF chapters in the WEB workshop manuals described below are based on information available at the time of publication. The company reserves the right to make updates and modifications. The following are prohibited: reprinting, reproduction, forwarding to unauthorized people and/or third parties, and translation, including partial, without written authorization from Automobili Lamborghini S.p.A.

Camber

This is the wheel's camber with respect to a plane perpendicular to the ground (**Fig.1**). The camber may be positive (the vehicle's wheels are "open" toward the top) or negative (the wheels appear open toward the bottom). The camber affects roadholding and driving comfort. The adjustment values were designed to obtain the best compromise between roadholding and comfort.

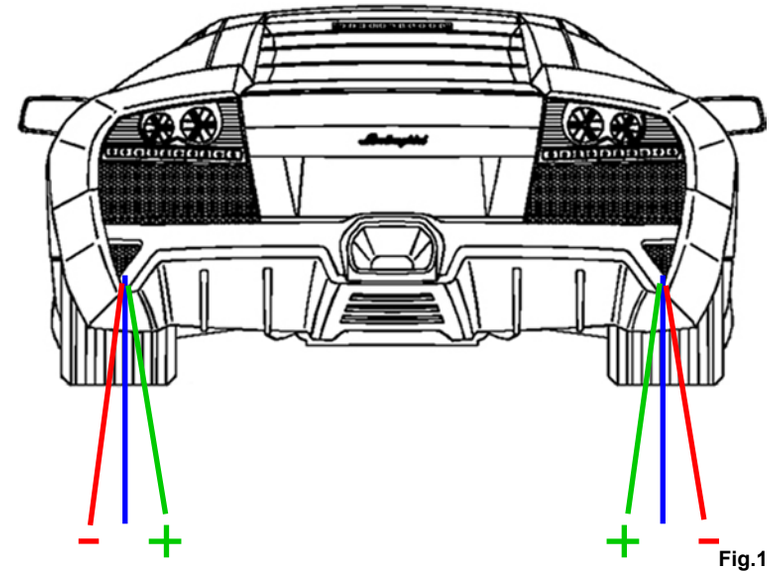

Fig.1

Strut caster

This is the angle that forms the steering axis of the wheel projected on the longitudinal vertical plane with respect to the transversal vertical plane passing through the wheel axle (**Fig.2**). When this angle is positive the steering axis meets the ground in front of the vertical axis; momentum is therefore created that tends to realign the wheels.

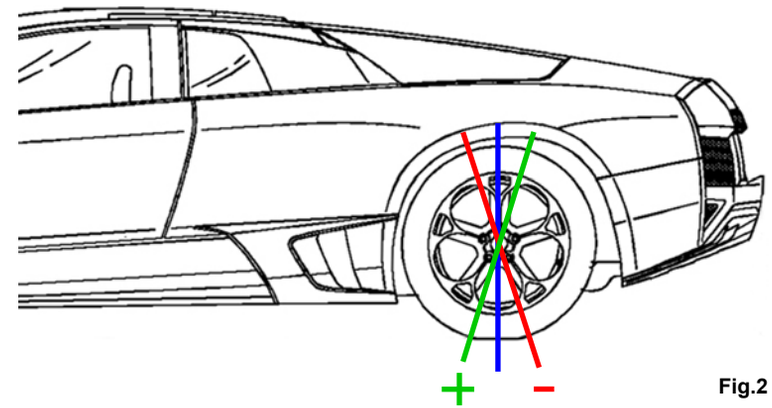

Fig.2

® Automobili Lamborghini S.p.A.
The information and procedures published below are strictly confidential and exclusively for the Lamborghini Dealer Network and Authorized Service Points. All copyrights are property of Automobili Lamborghini S.p.A based on copyright law. All of the PDF chapters in the WEB workshop manuals described below are based on information available at the time of publication. The company reserves the right to make updates and modifications. The following are prohibited: reprinting, reproduction, forwarding to unauthorized people and/or third parties, and translation, including partial, without written authorization from Automobili Lamborghini S.p.A.

Toe-in

This is the angle formed between the equatorial planes of the wheels of an axle and the vertical-longitudinal plane passing through the middle of the vehicle (Fig.3). The angle is positive when the directions of the two wheels converge at a point in front of the vehicle. It is negative when the point of convergence is behind the vehicle. In order to improve vehicle stability, the toe-in of the wheels is kept positive.

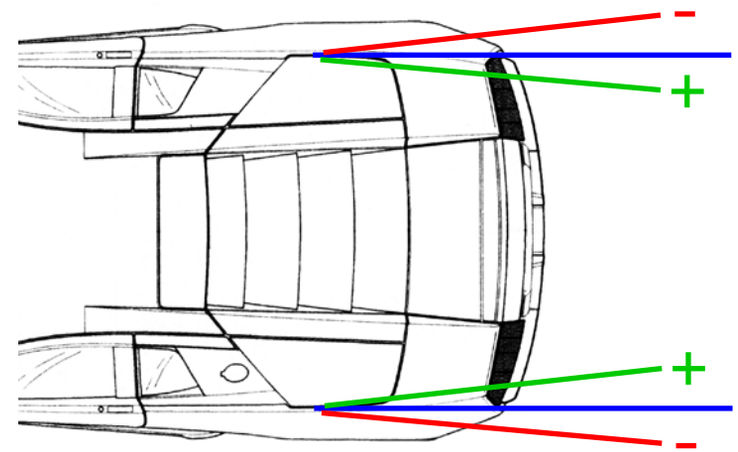

Fig.3

® Automobili Lamborghini S.p.A.
The information and procedures published below are strictly confidential and exclusively for the Lamborghini Dealer Network and Authorized Service Points. All copyrights are property of Automobili Lamborghini S.p.A based on copyright law. All of the PDF chapters in the WEB workshop manuals described below are based on information available at the time of publication. The company reserves the right to make updates and modifications. The following are prohibited: reprinting, reproduction, forwarding to unauthorized people and/or third parties, and translation, including partial, without written authorization from Automobili Lamborghini S.p.A.

Disassemble the rear propeller shaft

Preliminary operations

- Remove the car engine **(010003)**.
- Disassemble the gearbox **(030103)**.

Disassemble the shaft

1. Open the gearbox housing.
2. Remove the snap ring positioned between the engine housing and the bearing.
3. Remove the rear propeller shaft (**A-Fig.1**) using an extractor.

Fig.1

® Automobili Lamborghini S.p.A.
The information and procedures published below are strictly confidential and exclusively for the Lamborghini Dealer Network and Authorized Service Points. All copyrights are property of Automobili Lamborghini S.p.A based on copyright law. All of the PDF chapters in the WEB workshop manuals described below are based on information available at the time of publication. The company reserves the right to make updates and modifications. The following are prohibited: reprinting, reproduction, forwarding to unauthorized people and/or third parties, and translation, including partial, without written authorization from Automobili Lamborghini S.p.A.

Assembling the rear propeller shaft

1. Insert the propeller shaft (**A-Fig.1**).
2. Position the snap ring between the engine housing and the bearing.
3. Close the gearbox housing.

- Assemble the gearbox **(030105)**.
- Assemble the car engine **(010005)**.

Fig.1

® Automobili Lamborghini S.p.A.
The information and procedures published below are strictly confidential and exclusively for the Lamborghini Dealer Network and Authorized Service Points. All copyrights are property of Automobili Lamborghini S.p.A based on copyright law. All of the PDF chapters in the WEB workshop manuals described below are based on information available at the time of publication. The company reserves the right to make updates and modifications. The following are prohibited: reprinting, reproduction, forwarding to unauthorized people and/or third parties, and translation, including partial, without written authorization from Automobili Lamborghini S.p.A.

Rear ride height

STOP **Check the rear tire proper inflation.**

Adjust operating on the shock absorber ring nut and counter ring nut (**A-Fig.1**).

STOP **Carry out the check and adjustment on both sides of the vehicle.**

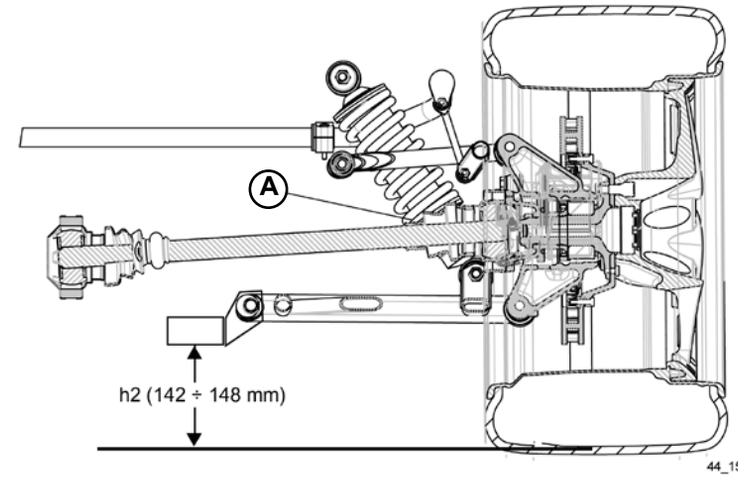

Fig.1

® Automobili Lamborghini S.p.A.
The information and procedures published below are strictly confidential and exclusively for the Lamborghini Dealer Network and Authorized Service Points. All copyrights are property of Automobili Lamborghini S.p.A based on copyright law. All of the PDF chapters in the WEB workshop manuals described below are based on information available at the time of publication. The company reserves the right to make updates and modifications. The following are prohibited: reprinting, reproduction, forwarding to unauthorized people and/or third parties, and translation, including partial, without written authorization from Automobili Lamborghini S.p.A.

Equipment assembly on the wheels

Use equipment available on the market (the one shown in the figure has illustration purposes only).

STOP Take care not to damage the vehicle rims.

Fig.2

® Automobili Lamborghini S.p.A.
The information and procedures published below are strictly confidential and exclusively for the Lamborghini Dealer Network and Authorized Service Points. All copyrights are property of Automobili Lamborghini S.p.A based on copyright law. All of the PDF chapters in the WEB workshop manuals described below are based on information available at the time of publication. The company reserves the right to make updates and modifications. The following are prohibited: reprinting, reproduction, forwarding to unauthorized people and/or third parties, and translation, including partial, without written authorization from Automobili Lamborghini S.p.A.

Camber (rear)

STOP **Measure must be taken after the check (and adjustment, if necessary) from the rear ride height (H-Fig.3).**

Adjust operating on cam pins (**A-Fig.3**).

STOP **Carry out the check and adjustment on both sides of the vehicle.**

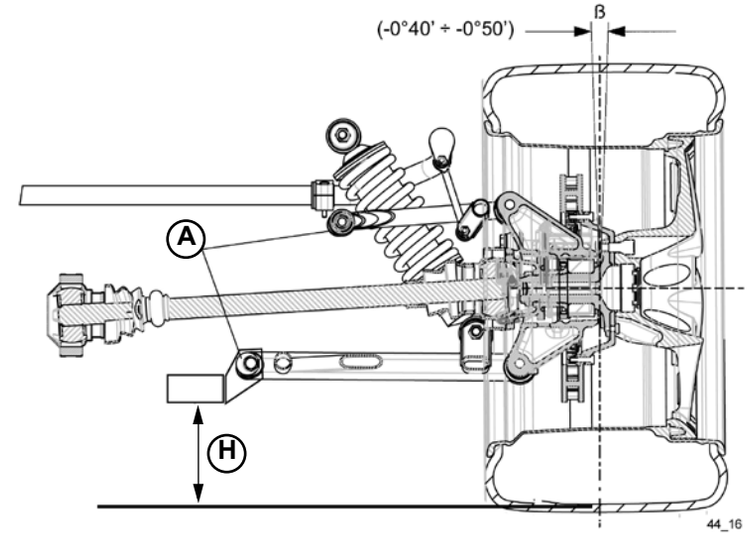

Fig.3

® Automobili Lamborghini S.p.A.
The information and procedures published below are strictly confidential and exclusively for the Lamborghini Dealer Network and Authorized Service Points. All copyrights are property of Automobili Lamborghini S.p.A based on copyright law. All of the PDF chapters in the WEB workshop manuals described below are based on information available at the time of publication. The company reserves the right to make updates and modifications. The following are prohibited: reprinting, reproduction, forwarding to unauthorized people and/or third parties, and translation, including partial, without written authorization from Automobili Lamborghini S.p.A.

Rear wheel toe-in

Adjust operating on the cam pins (**A-Fig.4**) to reach the specified D measure.

The indicated values are related to one wheel only.

STOP Carry out the check and adjustment on both sides of the vehicle.

The total value must be 0°20’ ÷ 0°28’.

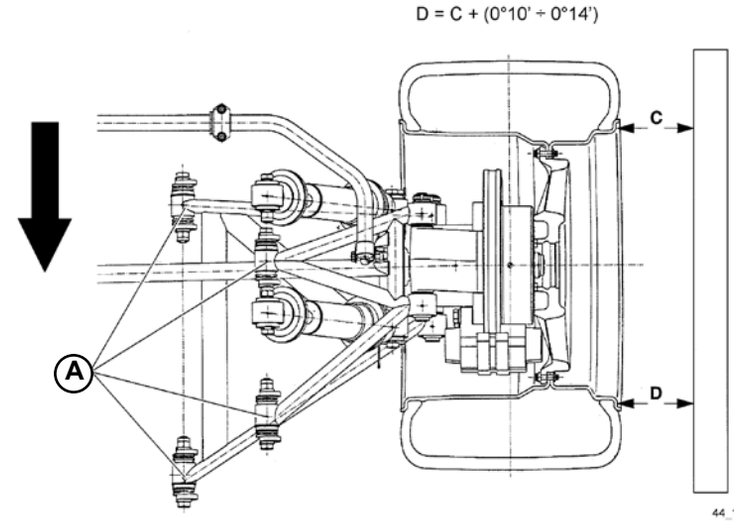

Fig.4

® Automobili Lamborghini S.p.A.
The information and procedures published below are strictly confidential and exclusively for the Lamborghini Dealer Network and Authorized Service Points. All copyrights are property of Automobili Lamborghini S.p.A based on copyright law. All of the PDF chapters in the WEB workshop manuals described below are based on information available at the time of publication. The company reserves the right to make updates and modifications. The following are prohibited: reprinting, reproduction, forwarding to unauthorized people and/or third parties, and translation, including partial, without written authorization from Automobili Lamborghini S.p.A.

Rear misalignment (Fig.5)	
A.	Adjustment shim SP

STOP **The adjustment shims SP are only to be used to adjust the caster.**

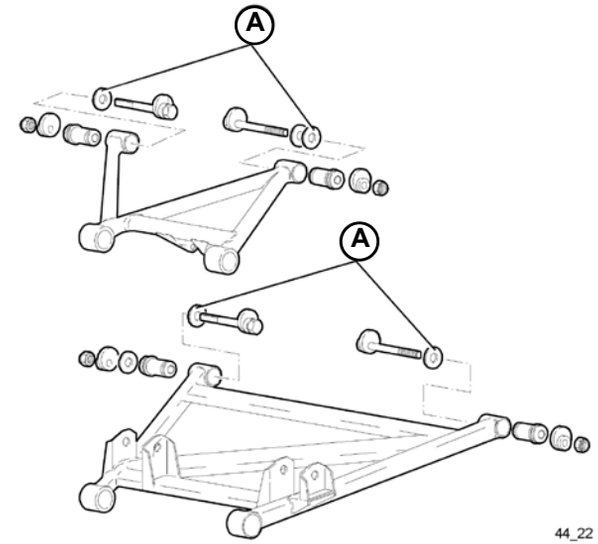

44_22 **Fig.5**

® Automobili Lamborghini S.p.A.
The information and procedures published below are strictly confidential and exclusively for the Lamborghini Dealer Network and Authorized Service Points. All copyrights are property of Automobili Lamborghini S.p.A based on copyright law. All of the PDF chapters in the WEB workshop manuals described below are based on information available at the time of publication. The company reserves the right to make updates and modifications. The following are prohibited: reprinting, reproduction, forwarding to unauthorized people and/or third parties, and translation, including partial, without written authorization from Automobili Lamborghini S.p.A.

Rear axle shaft disassembly

Preliminary operations

- Position the vehicle on the car lift **(000000)**.
- Disassemble the wheel **(060103)**.

Axle shaft disassembly

1. Free the axle shaft from the flange of the rear differential (**A-Fig.1**) by unscrewing the six mounting screws.
2. Free the axle shaft from the flange of the hub (**B-Fig.2**) by unscrewing the six mounting screws.
3. Free the hub housing (**C-Fig.3**) from the upper wishbone.
4. Disassemble the rear shock absorber furthest toward the outside **(051303)**.
5. Tilt the hub toward the ground (pulling the upper part toward yourself).
6. Extract the axle shaft.

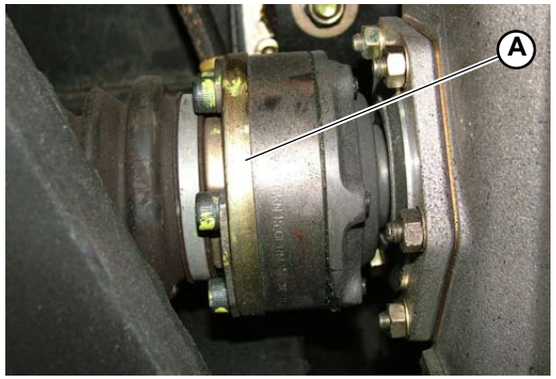

Fig.1

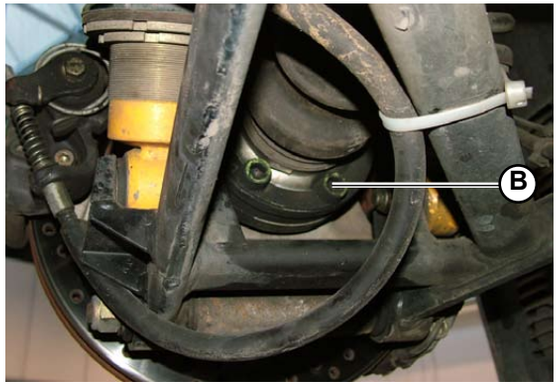

Fig.2

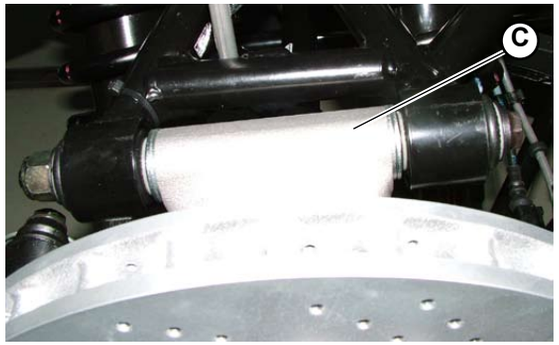

Fig.3

® Automobili Lamborghini S.p.A.
The information and procedures published below are strictly confidential and exclusively for the Lamborghini Dealer Network and Authorized Service Points. All copyrights are property of Automobili Lamborghini S.p.A based on copyright law. All of the PDF chapters in the WEB workshop manuals described below are based on information available at the time of publication. The company reserves the right to make updates and modifications. The following are prohibited: reprinting, reproduction, forwarding to unauthorized people and/or third parties, and translation, including partial, without written authorization from Automobili Lamborghini S.p.A.

Rear axle shaft assembly

1. Tilting the hub toward the ground (pulling the upper part toward yourself), position the axle shaft so that the mounting operations can be carried out.

2. Assemble the rear shock absorber furthest toward the outside **(051305)**.

3. Attach the hub housing (**A-Fig.1**) to the upper wishbone.

4. Secure the axle shaft onto the flange of the hub (**B-Fig.2**) by tightening the six mounting screws.
   Screw attachment; **tightening torque (000800-26d).**

5. Secure the axle shaft to the flange of the rear differential (**C-Fig.3**) by tightening the six mounting screws.
   Screw attachment; **tightening torque (000800-26d).**

- Assemble the wheel **(060105)**.

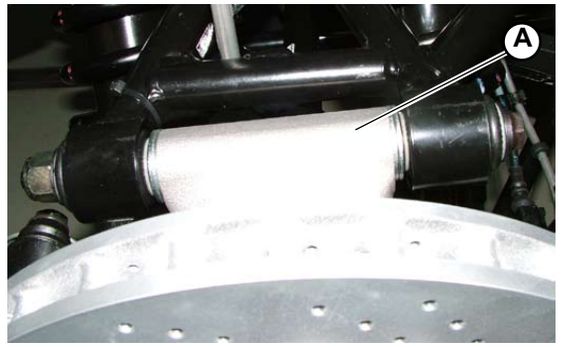

Fig.1

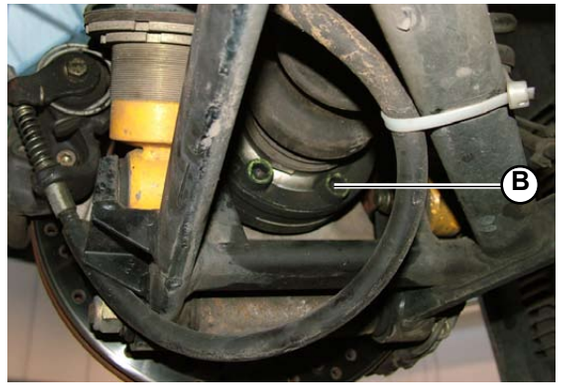

Fig.2

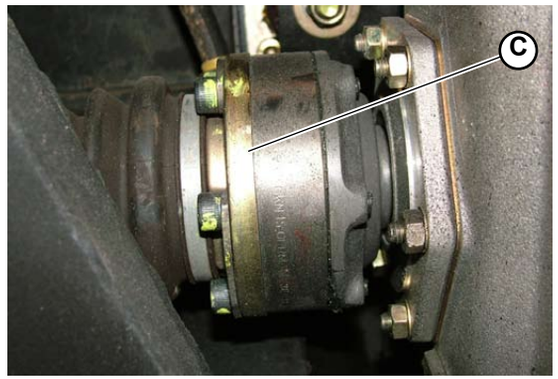

Fig.3

® Automobili Lamborghini S.p.A.
The information and procedures published below are strictly confidential and exclusively for the Lamborghini Dealer Network and Authorized Service Points. All copyrights are property of Automobili Lamborghini S.p.A based on copyright law. All of the PDF chapters in the WEB workshop manuals described below are based on information available at the time of publication. The company reserves the right to make updates and modifications. The following are prohibited: reprinting, reproduction, forwarding to unauthorized people and/or third parties, and translation, including partial, without written authorization from Automobili Lamborghini S.p.A.

Rear wheel and rear hubs

A.	Brake disk
B.	Hub
C.	Rim plastic cap
D.	Hub housing
E.	Bearing
F.	Upper arm
G.	Lower arm
H.	Anti-roll bar tie rod
I.	Anti-roll bar
L.	Axle shaft
M.	Shock absorber
N.	Counter ring nut to adjust vehicle height

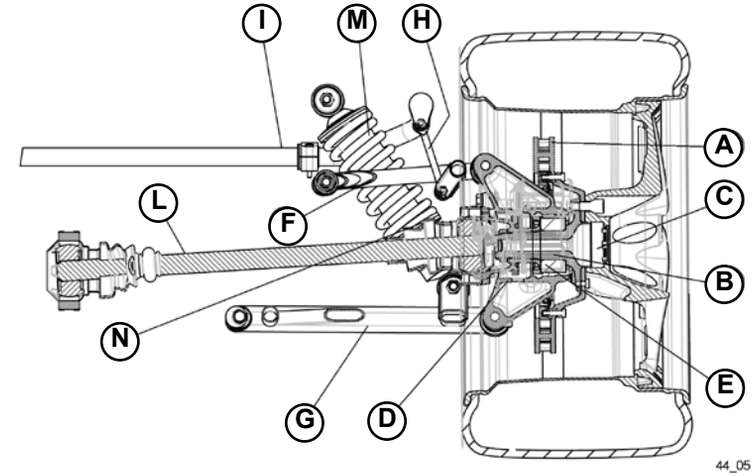

Fig.1

® Automobili Lamborghini S.p.A.
The information and procedures published below are strictly confidential and exclusively for the Lamborghini Dealer Network and Authorized Service Points. All copyrights are property of Automobili Lamborghini S.p.A based on copyright law. All of the PDF chapters in the WEB workshop manuals described below are based on information available at the time of publication. The company reserves the right to make updates and modifications. The following are prohibited: reprinting, reproduction, forwarding to unauthorized people and/or third parties, and translation, including partial, without written authorization from Automobili Lamborghini S.p.A.

Camber Rear β		- 0° 40’ ÷ - 0° 50’
Total toe-in Rear t2		0°20’ ÷ 0°28’
Ride height (*) Rear h2		142 ÷ 148
Adjustment shim SP:	005133170	1.0
	005133488	1.5
	005133489	2.0
	005133490	2.5
	005133169	3.0

(*)Measured on the lower surface of the chassis at the suspensions

® Automobili Lamborghini S.p.A.
The information and procedures published below are strictly confidential and exclusively for the Lamborghini Dealer Network and Authorized Service Points. All copyrights are property of Automobili Lamborghini S.p.A based on copyright law. All of the PDF chapters in the WEB workshop manuals described below are based on information available at the time of publication. The company reserves the right to make updates and modifications. The following are prohibited: reprinting, reproduction, forwarding to unauthorized people and/or third parties, and translation, including partial, without written authorization from Automobili Lamborghini S.p.A.

This section explains how to disassemble:

A) Hub disassembly
B) Bearing disassembly

A) Hub disassembly

Preliminary operations

- Raise the car on the car lift **(000000).**
- Remove the rear wheel **(060103).**
- Remove the brake caliper **(060703)**.
- Remove the parking brake **(060203)**.
- Remove the brake disk **(061503)**.
- Release the axle shaft **(050503)**.
- Release the 2 shock absorbers **(051303)**.

Hub disassembly

1. Unscrew the 4 screws **(A-Fig.1)** securing the suspensions.
2. Remove the hub.

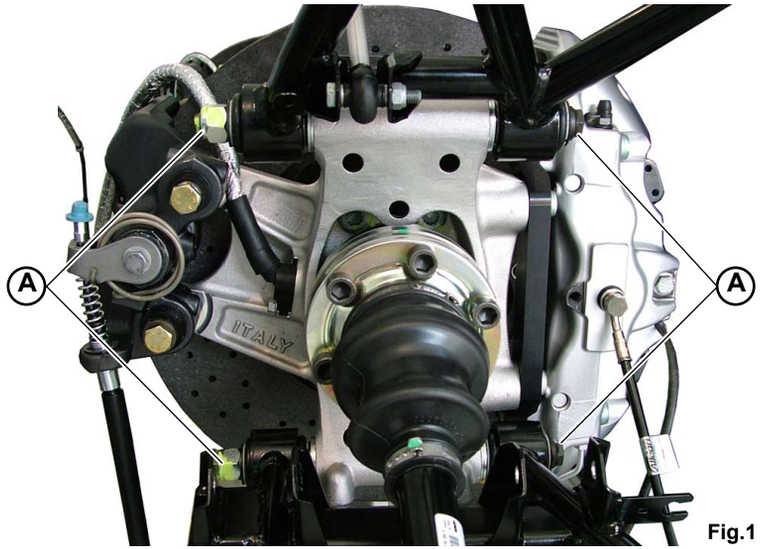

Fig.1

® Automobili Lamborghini S.p.A.
The information and procedures published below are strictly confidential and exclusively for the Lamborghini Dealer Network and Authorized Service Points. All copyrights are property of Automobili Lamborghini S.p.A based on copyright law. All of the PDF chapters in the WEB workshop manuals described below are based on information available at the time of publication. The company reserves the right to make updates and modifications. The following are prohibited: reprinting, reproduction, forwarding to unauthorized people and/or third parties, and translation, including partial, without written authorization from Automobili Lamborghini S.p.A.

B) Bearing disassembly

Preliminary operations

- Raise the car on the car lift **(000000).**
- Remove the rear wheel **(060103).**
- Remove the brake caliper **(060703)**.
- Remove the parking brake **(060203)**.
- Remove the brake disk **(061503)**.
- Release the axle shaft **(050503)**.
- Release the 2 shock absorbers **(051303)**.
- Remove the springs **(051103)**.

Bearing disassembly

1. Remove the hub assembly + hub carrier.
2. Unscrew the ring nut (**A-Fig.2**) and extract the washer (**B-Fig.2**).
3. Extract the phonic wheel (**C-Fig.2**).
4. Unscrew the 4 screws (**D-Fig.3**) securing the hub carrier to the bearing.
5. Remove the hub carrier (**E-Fig.3**).
6. Using a puller, extract the bearing (**F-Fig.4**) from the hub (**G-Fig.4**).

It is absolutely forbidden to reassemble the removed bearing during subsequent re-assembly procedures.

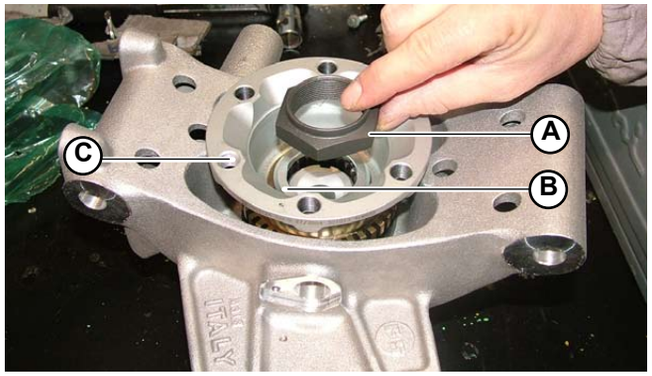

Fig.2

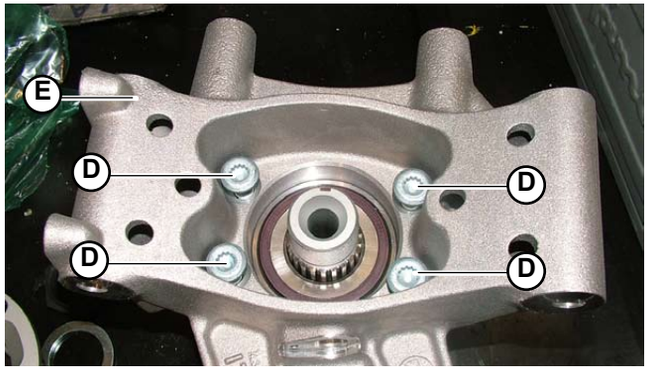

Fig.3

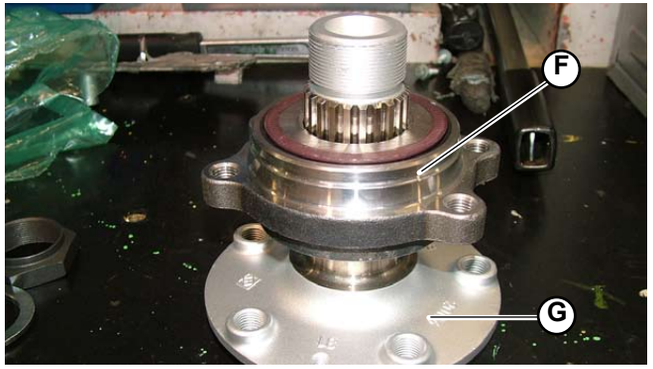

Fig.4

® Automobili Lamborghini S.p.A.
The information and procedures published below are strictly confidential and exclusively for the Lamborghini Dealer Network and Authorized Service Points. All copyrights are property of Automobili Lamborghini S.p.A based on copyright law. All of the PDF chapters in the WEB workshop manuals described below are based on information available at the time of publication. The company reserves the right to make updates and modifications. The following are prohibited: reprinting, reproduction, forwarding to unauthorized people and/or third parties, and translation, including partial, without written authorization from Automobili Lamborghini S.p.A.

This section explains how to assemble:

A) Hub assembly
B) Bearing assembly

A) Hub assembly

1. Tighten the 4 screws **(A-Fig.1)** to secure the suspensions.

- Fix the 2 shock absorbers **(051305)**.
- Secure the axle shaft **(050505)**.
- Assemble the brake disk **(061505)**.
- Assemble the brake caliper **(060705)**.
- Assemble the parking brake **(060205)**.
- Assemble the rear wheel **(060105).**

Check that the shims were repositioned as prior to disassembly.

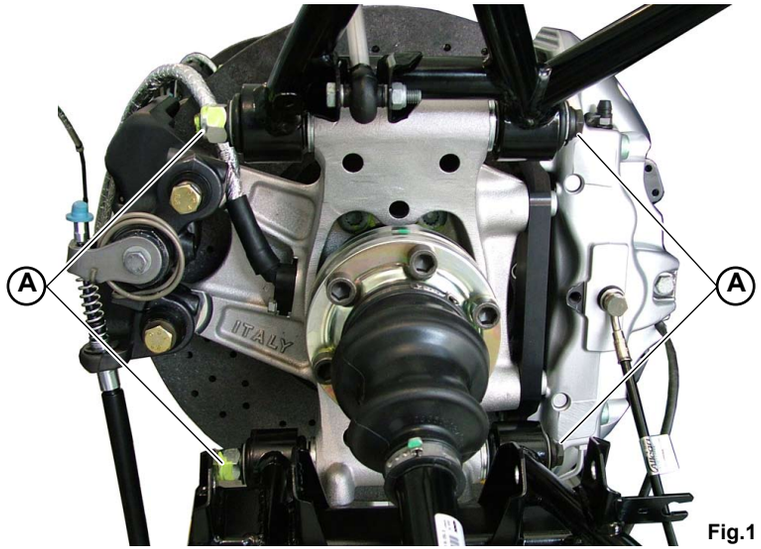

Fig.1

® Automobili Lamborghini S.p.A.
The information and procedures published below are strictly confidential and exclusively for the Lamborghini Dealer Network and Authorized Service Points. All copyrights are property of Automobili Lamborghini S.p.A based on copyright law. All of the PDF chapters in the WEB workshop manuals described below are based on information available at the time of publication. The company reserves the right to make updates and modifications. The following are prohibited: reprinting, reproduction, forwarding to unauthorized people and/or third parties, and translation, including partial, without written authorization from Automobili Lamborghini S.p.A.

B) Bearing assembly

1. Using a press, assemble the bearing (**A-Fig.2**) on the hub (**B-Fig.2**).

STOP It is absolutely forbidden to reassemble the removed bearing; always use a new bearing.

2. Position the hub carrier (**C-Fig.3**) and secure to the bearing using the 4 screws (**D-Fig.3**).
3. Position the phonic wheel (**E-Fig.4**) inside the hub carrier.
4. Position the washer (**F-Fig.4**) (chamfered side up).
5. Act on the ring nut (**G-Fig.4**) to secure the phonic wheel and the washer.
6. Once the ring nut has been tightened, rivet the ring nut inside the slot on the shaft.

- Assemble the springs **(051105)**.
- Fix the 2 shock absorbers **(051305)**.
- Secure the axle shaft **(050505)**.
- Assemble the brake disk **(061505)**.
- Assemble the brake caliper **(060705)**.
- Assemble the parking brake **(060205)**.
- Assemble the rear wheel **(060105).**

The car must undergo a self-levelling test before returning to road use (001100).

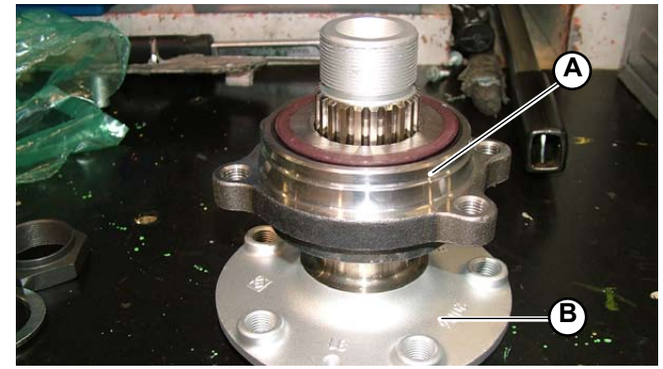

Fig.2

Fig.3

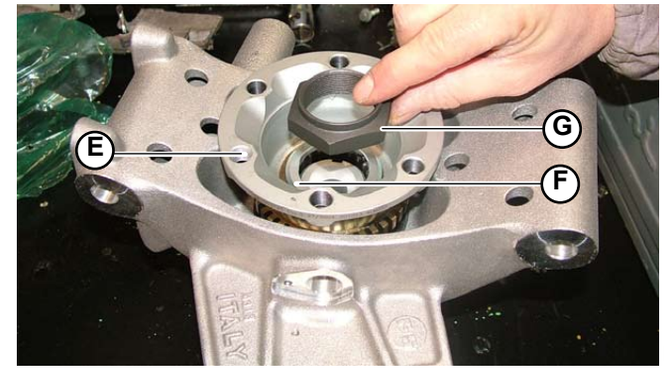

Fig.4

® Automobili Lamborghini S.p.A.
The information and procedures published below are strictly confidential and exclusively for the Lamborghini Dealer Network and Authorized Service Points. All copyrights are property of Automobili Lamborghini S.p.A based on copyright law. All of the PDF chapters in the WEB workshop manuals described below are based on information available at the time of publication. The company reserves the right to make updates and modifications. The following are prohibited: reprinting, reproduction, forwarding to unauthorized people and/or third parties, and translation, including partial, without written authorization from Automobili Lamborghini S.p.A.

Rear differential

The rear differential is driven directly by the gearbox transmission gear and the shaft by the engine crankcase side.
The rear differential is partially self-locking.

A.	Rear drive flange
B.	Pinion ring nut
C.	Pinion taper bearings
D.	Pinion
E.	Differential
F.	Differential carrier cover
G.	Silentblock
H.	Crown
I.	Differential roller bearings
L.	Differential flange
M.	Differential flange shims
N.	Axle shaft flange bearing
O.	Axle shaft flange
P.	Differential carrier
Q.	Pinion height shim
R.	Pinion taper bearing spacer
S.	Oil seal
T.	Rear propeller shaft

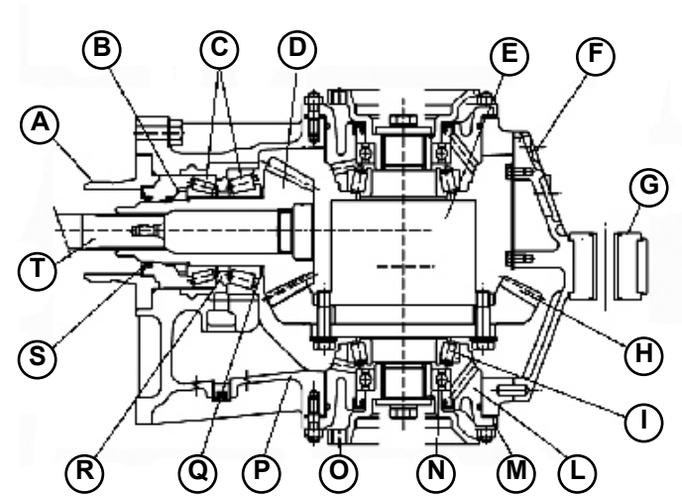

Fig.1

® Automobili Lamborghini S.p.A.
The information and procedures published below are strictly confidential and exclusively for the Lamborghini Dealer Network and Authorized Service Points. All copyrights are property of Automobili Lamborghini S.p.A based on copyright law. All of the PDF chapters in the WEB workshop manuals described below are based on information available at the time of publication. The company reserves the right to make updates and modifications. The following are prohibited: reprinting, reproduction, forwarding to unauthorized people and/or third parties, and translation, including partial, without written authorization from Automobili Lamborghini S.p.A.

Reduction crown wheel and pinion	Hypoid
Reduction ratio	1:2.9333
Self-locking percentage	50%
Bearing type	taper roller
Pre-load adjustment	with spacer washers
Pinion bearing pre-load: rolling torque	3 ÷ 5 Nm
Crown bearing pre-load: rolling torque	3 ÷ 5 Nm
Pinion-crown coupling clearance (mm)	0.18 ± 0.21

® Automobili Lamborghini S.p.A.
The information and procedures published below are strictly confidential and exclusively for the Lamborghini Dealer Network and Authorized Service Points. All copyrights are property of Automobili Lamborghini S.p.A based on copyright law. All of the PDF chapters in the WEB workshop manuals described below are based on information available at the time of publication. The company reserves the right to make updates and modifications. The following are prohibited: reprinting, reproduction, forwarding to unauthorized people and/or third parties, and translation, including partial, without written authorization from Automobili Lamborghini S.p.A.

Adjustment rear differential

CAUTION

- All operations must be carried out with the utmost care to avoid injury to people.
- Specific tools are required for certain procedures. The use of these tools is essential to ensure safe operation.
- Follow the safety rules in force in the workshop. Specific warnings are provided in the Manual where specific precautions are required to prevent hazardous situations..
- When employing chemical products scrupulously follow the instructions shown on the safety data sheet that the supplier is required to hand over to the user.

WARNING

- All operations must be carried out with the utmost care to avoid damage to components.
- Use a depth gauge with a minimum precision of 1/100 mm for measuring.
- During the disassembly check that the elements have the correct reference marks as required.
- During the reassembly lubricate the required parts to prevent seizing during initial operation.
- During the reassembly respect the tightening torques and the adjustment data.
- Replace gaskets, seals, snap rings, safety plates, self-locking nuts, caulked edge nuts and all other worn out parts during each reassembly.
- Use Loctite/Arexons 518 sealant or Loctite/Arexons 641 sealant as instructed during the ressembly;
- Use Loctite/Arexons medium thread sealant 52A42 or Loctite/Arexons strong thread sealant 52A70 during the ressembly.

® Automobili Lamborghini S.p.A.
The information and procedures published below are strictly confidential and exclusively for the Lamborghini Dealer Network and Authorized Service Points. All copyrights are property of Automobili Lamborghini S.p.A based on copyright law. All of the PDF chapters in the WEB workshop manuals described below are based on information available at the time of publication. The company reserves the right to make updates and modifications. The following are prohibited: reprinting, reproduction, forwarding to unauthorized people and/or third parties, and translation, including partial, without written authorization from Automobili Lamborghini S.p.A.

- Check the correct bearing pre-load as follows:
  - install a suitable tool for measuring the rolling torque on an axle shaft flange.

STOP **The planetary gear set does not need to be fastened thanks to the intrinsic characteristics of this differential.**

- Check that the rolling torque (ignoring the pickup one) is within the prescribed values **(050900)**.

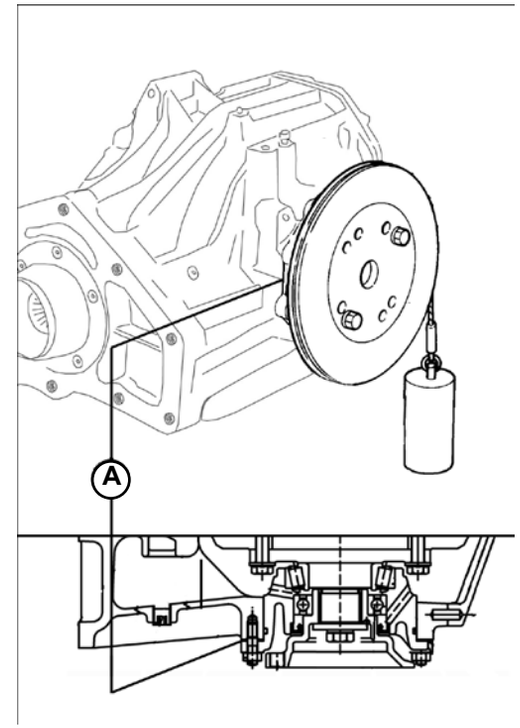

Fig.1

® Automobili Lamborghini S.p.A.
The information and procedures published below are strictly confidential and exclusively for the Lamborghini Dealer Network and Authorized Service Points. All copyrights are property of Automobili Lamborghini S.p.A based on copyright law. All of the PDF chapters in the WEB workshop manuals described below are based on information available at the time of publication. The company reserves the right to make updates and modifications. The following are prohibited: reprinting, reproduction, forwarding to unauthorized people and/or third parties, and translation, including partial, without written authorization from Automobili Lamborghini S.p.A.

- If this is not so operate on adjusting shim (**A-Fig.2**) as follows:
  - to increase torque → decrease the value of shim A;
  - to decrease torque → increase the value of shim A.

- Remove the differential flanges and the differential assembly at the end of these operations.

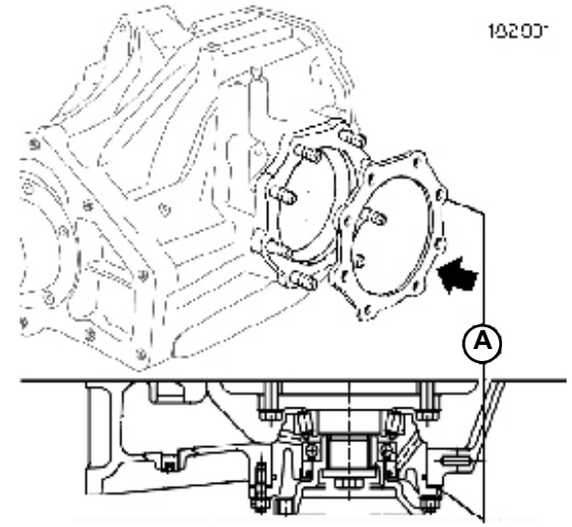

Fig.2

® Automobili Lamborghini S.p.A.
The information and procedures published below are strictly confidential and exclusively for the Lamborghini Dealer Network and Authorized Service Points. All copyrights are property of Automobili Lamborghini S.p.A based on copyright law. All of the PDF chapters in the WEB workshop manuals described below are based on information available at the time of publication. The company reserves the right to make updates and modifications. The following are prohibited: reprinting, reproduction, forwarding to unauthorized people and/or third parties, and translation, including partial, without written authorization from Automobili Lamborghini S.p.A.

- **Install both pinion roller bearing outer rings to the differential carrier by means of a suitable pad.**

- Install on the pinion:
  - tentative adjustment shim (**D-Fig.3**): sD=1,5 mm;
  - the taper roller bearing (**A-Fig.3**) by means of a suitable pad;
  - the tentative spacer (**C-Fig.3**): sC=16.85 mm (total).

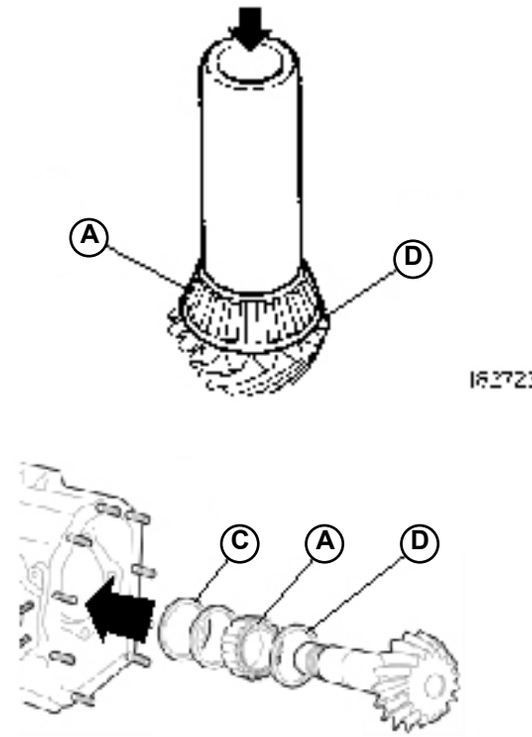

Fig.3

® Automobili Lamborghini S.p.A.
The information and procedures published below are strictly confidential and exclusively for the Lamborghini Dealer Network and Authorized Service Points. All copyrights are property of Automobili Lamborghini S.p.A based on copyright law. All of the PDF chapters in the WEB workshop manuals described below are based on information available at the time of publication. The company reserves the right to make updates and modifications. The following are prohibited: reprinting, reproduction, forwarding to unauthorized people and/or third parties, and translation, including partial, without written authorization from Automobili Lamborghini S.p.A.

Check the correct bearing pre-load as follows:

- Install a suitable tool for measuring the rolling torque on the pinion splined shaft.

STOP **The planetary gear set does not need to be fastened thanks to the intrinsic characteristics of this differential.**

- Check that the rolling torque, ignoring the pickup one, is within the prescribed values.

STOP **A rolling torque value tending towards the upper tolerance limit should be preferred.**

- If necessary, adjust the spacer (**C-Fig.4**) as follows:
  - to increase torque → decrease the thickness of spacer C;
  - to decrease torque → increase the thickness of spacer C.

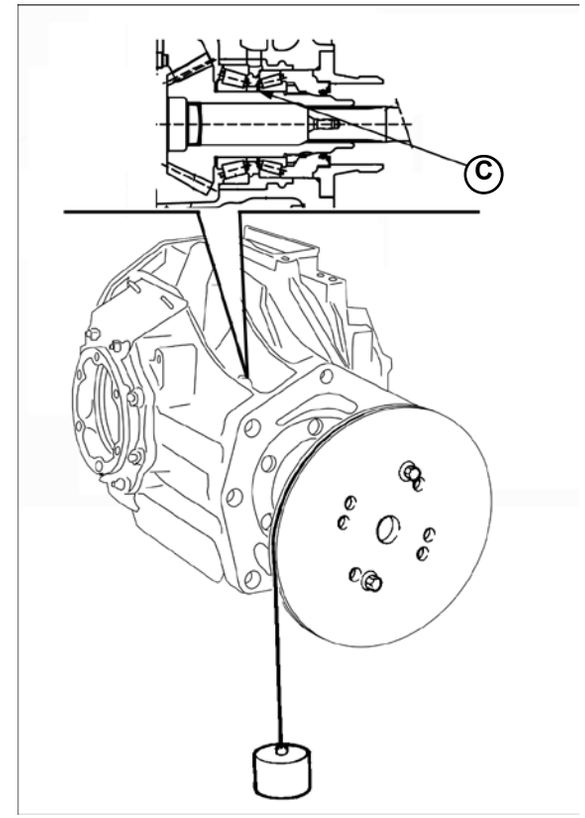

Fig.4

® Automobili Lamborghini S.p.A.
The information and procedures published below are strictly confidential and exclusively for the Lamborghini Dealer Network and Authorized Service Points. All copyrights are property of Automobili Lamborghini S.p.A based on copyright law. All of the PDF chapters in the WEB workshop manuals described below are based on information available at the time of publication. The company reserves the right to make updates and modifications. The following are prohibited: reprinting, reproduction, forwarding to unauthorized people and/or third parties, and translation, including partial, without written authorization from Automobili Lamborghini S.p.A.

NOTE
The pinion bearing pre-load and the pinion height are strictly related: in case of pre-load adjustment check and, if necessary, adjust the pinion height: in case of pinion height adjustment check and, if necessary, adjust the pinion pre-load: each operation is correctly carried out only if the pinion pre-load and the pinion height are within the prescribed values.

- Install P/N 62395054 special tool in the hub seats and check that the measure is within the prescribed values:
  dimension X: 51.69 ± 0.03 mm

Fig.5

® Automobili Lamborghini S.p.A.
The information and procedures published below are strictly confidential and exclusively for the Lamborghini Dealer Network and Authorized Service Points. All copyrights are property of Automobili Lamborghini S.p.A based on copyright law. All of the PDF chapters in the WEB workshop manuals described below are based on information available at the time of publication. The company reserves the right to make updates and modifications. The following are prohibited: reprinting, reproduction, forwarding to unauthorized people and/or third parties, and translation, including partial, without written authorization from Automobili Lamborghini S.p.A.

- In case the value in not within the prescribed values, adjust the adjusting shim (**D-Fig.6**) as follows:
  - to increase dimension X → decrease the value of shim D;
  - to decrease dimension X → increase the value of shim D;
  - check dimension X again.

STOP **Tighten the pinion mounting ring nut to the prescribed tightening torque (490 Nm with Molycote 1000) whenever dimension X is measured.**

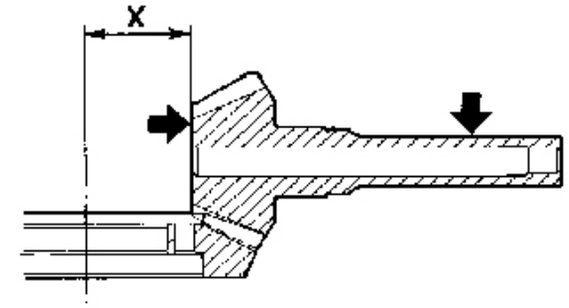

182 732

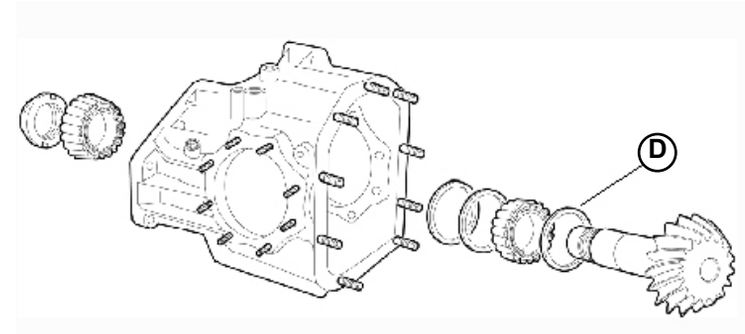

Fig.6

® Automobili Lamborghini S.p.A.
The information and procedures published below are strictly confidential and exclusively for the Lamborghini Dealer Network and Authorized Service Points. All copyrights are property of Automobili Lamborghini S.p.A based on copyright law. All of the PDF chapters in the WEB workshop manuals described below are based on information available at the time of publication. The company reserves the right to make updates and modifications. The following are prohibited: reprinting, reproduction, forwarding to unauthorized people and/or third parties, and translation, including partial, without written authorization from Automobili Lamborghini S.p.A.

- Install the hubs and the differential.

- Install the previously identified adjusting shims A and B, position the differential assembly, install the hub on both sides and tighten the nuts to the prescribed tightening torque.

- Check the correct pinion-crown clearance as follows:
  - check that the value is within the prescribed values by means of a dial gauge:
    pinion-crown clearance: 0.18 – 0.21 mm

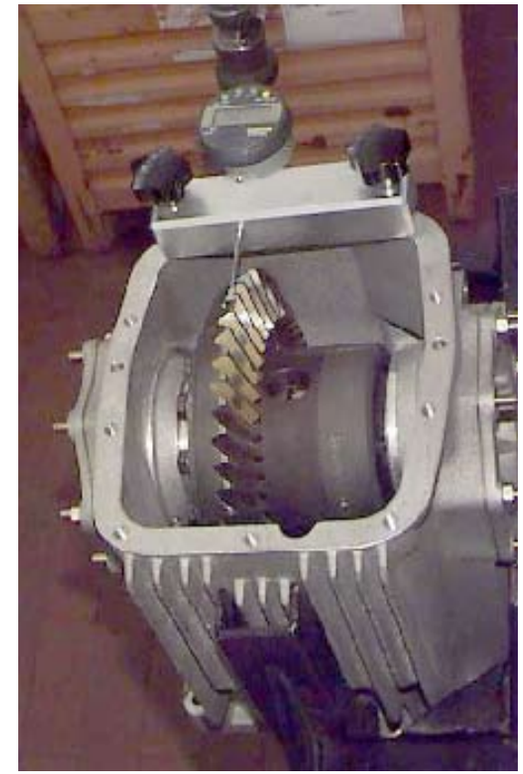

Fig.7

® Automobili Lamborghini S.p.A.
The information and procedures published below are strictly confidential and exclusively for the Lamborghini Dealer Network and Authorized Service Points. All copyrights are property of Automobili Lamborghini S.p.A based on copyright law. All of the PDF chapters in the WEB workshop manuals described below are based on information available at the time of publication. The company reserves the right to make updates and modifications. The following are prohibited: reprinting, reproduction, forwarding to unauthorized people and/or third parties, and translation, including partial, without written authorization from Automobili Lamborghini S.p.A.

If this is not so, operate on adjusting shims as follows:

- to decrease the clearance → decrease shim (**B-Fig.8**) and increase shim (**A-Fig.8**) accordingly;
- to increase the clearance → increase shim (**B-Fig.8**) and decrease shim (**A-Fig.8**) accordingly.

- Remove the flanges at the end of the operation.

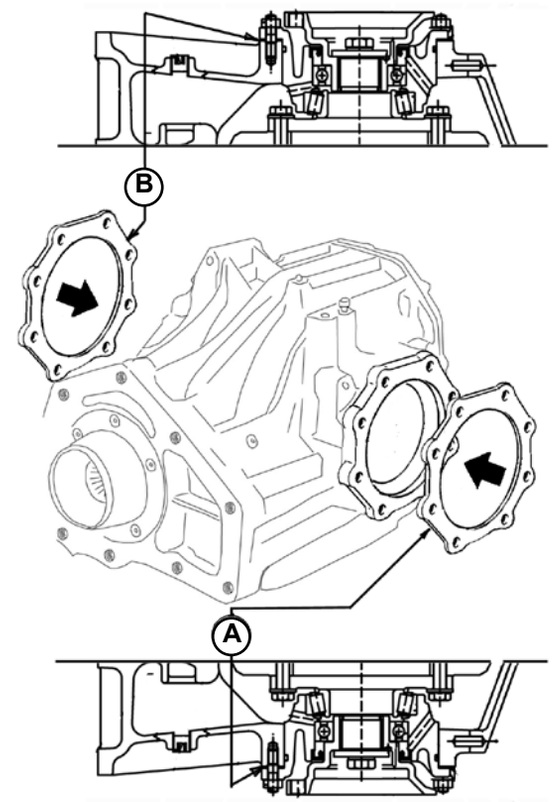

Fig.8

® Automobili Lamborghini S.p.A.
The information and procedures published below are strictly confidential and exclusively for the Lamborghini Dealer Network and Authorized Service Points. All copyrights are property of Automobili Lamborghini S.p.A based on copyright law. All of the PDF chapters in the WEB workshop manuals described below are based on information available at the time of publication. The company reserves the right to make updates and modifications. The following are prohibited: reprinting, reproduction, forwarding to unauthorized people and/or third parties, and translation, including partial, without written authorization from Automobili Lamborghini S.p.A.

Rear differential disassembly

CAUTION

- All operations must be carried out with the utmost care to avoid injury to people.
- Specific tools are required for certain procedures. The use of these tools is essential to ensure safe operation.
- Follow the safety rules in force in the workshop. Specific warnings are provided in the Manual where specific precautions are required to prevent hazardous situations.
- When employing chemical products scrupulously follow the instructions shown on the safety data sheet that the supplier is required to hand over to the user.

WARNING

- All operations must be carried out with the utmost care to avoid damage to components.
- Use a depth gauge with a minimum precision of 1/100 mm for measuring.
- Loosen tight-fitting ferrous parts by tapping with an aluminum or lead hammer and loosen tight-fitting light alloy parts by tapping with a resin or a wooden hammer.

® Automobili Lamborghini S.p.A.
The information and procedures published below are strictly confidential and exclusively for the Lamborghini Dealer Network and Authorized Service Points. All copyrights are property of Automobili Lamborghini S.p.A based on copyright law. All of the PDF chapters in the WEB workshop manuals described below are based on information available at the time of publication. The company reserves the right to make updates and modifications. The following are prohibited: reprinting, reproduction, forwarding to unauthorized people and/or third parties, and translation, including partial, without written authorization from Automobili Lamborghini S.p.A.

STOP **The following overhauling procedures can only be completely carried out after removing the power train assembly from the vehicle (010003);**

- Remove the alternator **(090303)** and its auxiliary belt adjuster **(010103)**.
- Remove the power steering pump support frame, A/C compressor and alternator (Unscrew the 4 screws).
- Remove the axle shaft heat-proof protections.
- Remove the rear differential mounting screws from the power train assembly.
- Remove the alternator heat-proof protection.
- Unscrew the rear differential mounting nuts and remove the rear differential from the engine.

® Automobili Lamborghini S.p.A.
The information and procedures published below are strictly confidential and exclusively for the Lamborghini Dealer Network and Authorized Service Points. All copyrights are property of Automobili Lamborghini S.p.A based on copyright law. All of the PDF chapters in the WEB workshop manuals described below are based on information available at the time of publication. The company reserves the right to make updates and modifications. The following are prohibited: reprinting, reproduction, forwarding to unauthorized people and/or third parties, and translation, including partial, without written authorization from Automobili Lamborghini S.p.A.

CAUTION

Use suitable tools to handle the assembly.
Make sure that the assembly is correctly fastened and stable to prevent it from tipping over or falling.

STOP **The assembly can be fastened to a bracket using the differential cover mounting holes to the engine.**

Fig.1

® Automobili Lamborghini S.p.A.
The information and procedures published below are strictly confidential and exclusively for the Lamborghini Dealer Network and Authorized Service Points. All copyrights are property of Automobili Lamborghini S.p.A based on copyright law. All of the PDF chapters in the WEB workshop manuals described below are based on information available at the time of publication. The company reserves the right to make updates and modifications. The following are prohibited: reprinting, reproduction, forwarding to unauthorized people and/or third parties, and translation, including partial, without written authorization from Automobili Lamborghini S.p.A.

- Loosen the mounting screws and remove the differential carrier cover.

Fig.2

- Unscrew the axle shaft flange mounting screw, keeping the washer; repeat the operation on the other side.

STOP **The washer and the mounting bolt belong to the differential Set and they are not supplied separately**.

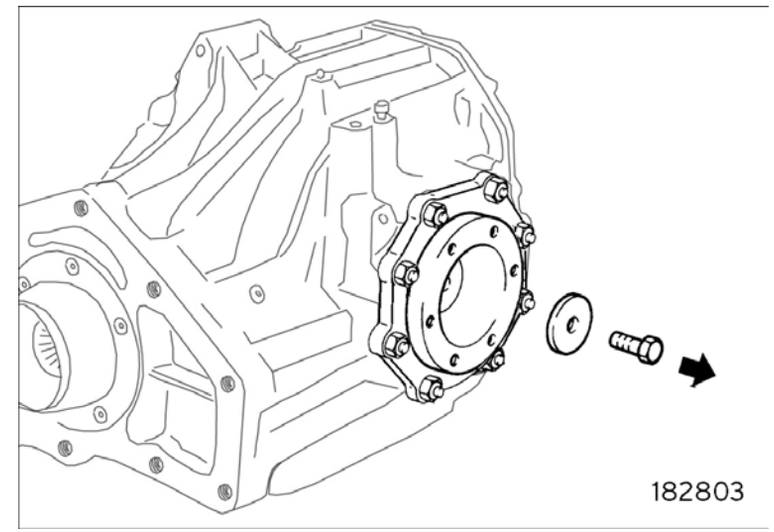

Fig.3

® Automobili Lamborghini S.p.A.
The information and procedures published below are strictly confidential and exclusively for the Lamborghini Dealer Network and Authorized Service Points. All copyrights are property of Automobili Lamborghini S.p.A based on copyright law. All of the PDF chapters in the WEB workshop manuals described below are based on information available at the time of publication. The company reserves the right to make updates and modifications. The following are prohibited: reprinting, reproduction, forwarding to unauthorized people and/or third parties, and translation, including partial, without written authorization from Automobili Lamborghini S.p.A.

- Use a suitable puller and introduce a shim to remove the axle shaft flange; repeat the operation on the other side.

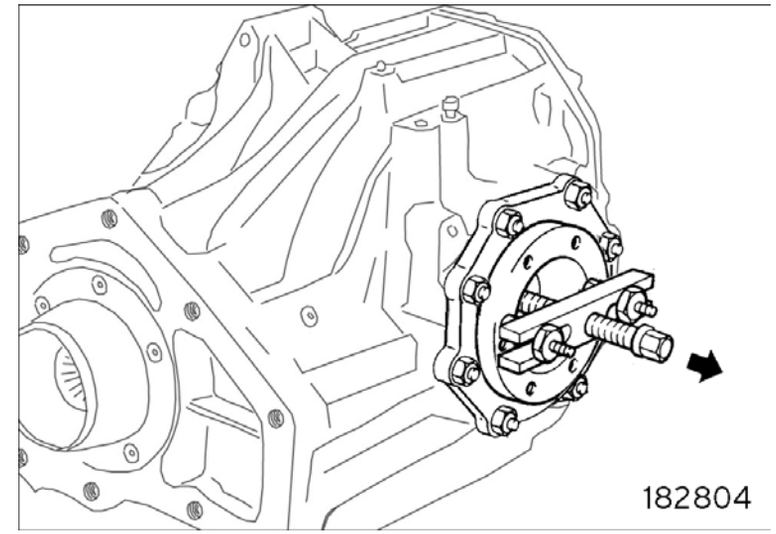

Fig.4

® Automobili Lamborghini S.p.A.
The information and procedures published below are strictly confidential and exclusively for the Lamborghini Dealer Network and Authorized Service Points. All copyrights are property of Automobili Lamborghini S.p.A based on copyright law. All of the PDF chapters in the WEB workshop manuals described below are based on information available at the time of publication. The company reserves the right to make updates and modifications. The following are prohibited: reprinting, reproduction, forwarding to unauthorized people and/or third parties, and translation, including partial, without written authorization from Automobili Lamborghini S.p.A.

- Unscrew the mounting nuts and remove the differential flange with its adjusting shims A; repeat the operation on the other side.

STOP The differential flange has two threaded holes which allow an easy removal of the flange from the carrier by introducing two 6-mm screws.

Fig.5

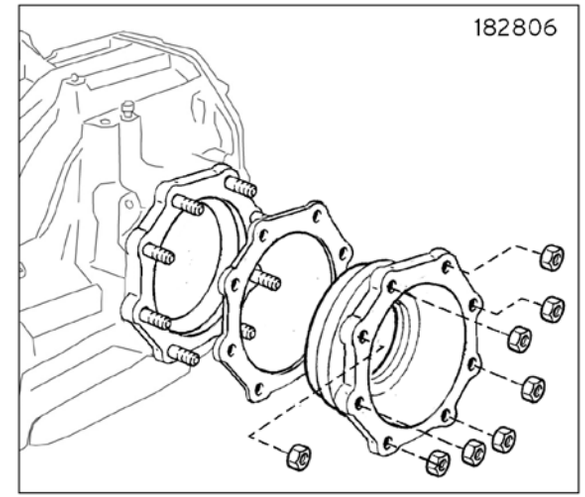

Fig.6

® Automobili Lamborghini S.p.A.
The information and procedures published below are strictly confidential and exclusively for the Lamborghini Dealer Network and Authorized Service Points. All copyrights are property of Automobili Lamborghini S.p.A based on copyright law. All of the PDF chapters in the WEB workshop manuals described below are based on information available at the time of publication. The company reserves the right to make updates and modifications. The following are prohibited: reprinting, reproduction, forwarding to unauthorized people and/or third parties, and translation, including partial, without written authorization from Automobili Lamborghini S.p.A.

- Remove the differential unit from the differential carrier.

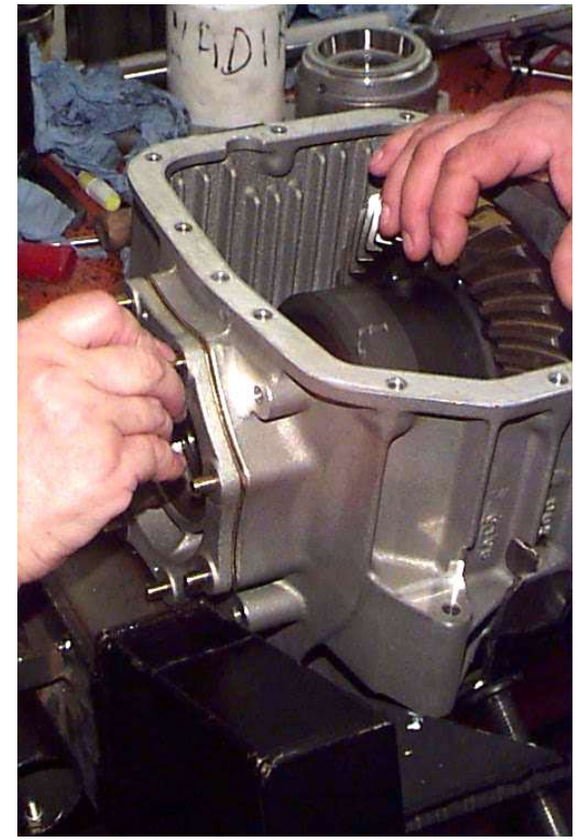

Fig.7

® Automobili Lamborghini S.p.A.
The information and procedures published below are strictly confidential and exclusively for the Lamborghini Dealer Network and Authorized Service Points. All copyrights are property of Automobili Lamborghini S.p.A based on copyright law. All of the PDF chapters in the WEB workshop manuals described below are based on information available at the time of publication. The company reserves the right to make updates and modifications. The following are prohibited: reprinting, reproduction, forwarding to unauthorized people and/or third parties, and translation, including partial, without written authorization from Automobili Lamborghini S.p.A.

- Remove the flange (**C-Fig.8**) unscrewing the 6 socket head screws.
- Take care of the seal (**B-Fig.8**).
- Remove the oil seal (**A-Fig.8**).

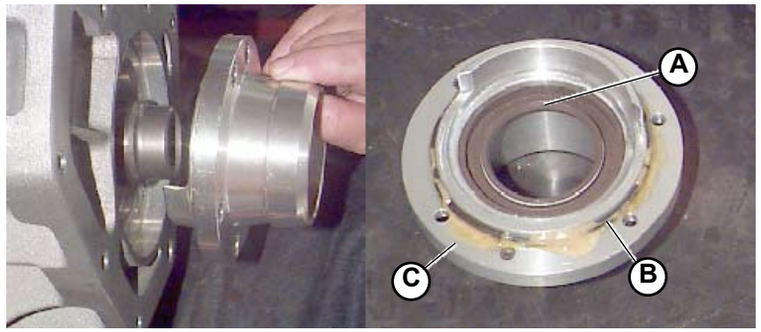

Fig.8

- Straighten the ring nut caulking and remove the ring nut by means of P/N 62395079 special wrench and hold the pinion correctly (e.g. with a splined shaft in a vice).

Fig.9

® Automobili Lamborghini S.p.A.
The information and procedures published below are strictly confidential and exclusively for the Lamborghini Dealer Network and Authorized Service Points. All copyrights are property of Automobili Lamborghini S.p.A based on copyright law. All of the PDF chapters in the WEB workshop manuals described below are based on information available at the time of publication. The company reserves the right to make updates and modifications. The following are prohibited: reprinting, reproduction, forwarding to unauthorized people and/or third parties, and translation, including partial, without written authorization from Automobili Lamborghini S.p.A.

- Remove the drive side pinion bearing (**E-Fig.10**).
- Remove the pinion (**A-Fig.10**) with its inner bearing (**C-Fig.10**), spacer (**D-Fig.10**) and pre-load adjusting shims (**B-Fig.10**) from inside the differential carrier (cover side).
- Remove both pinion roller bearing rings from the gearbox by means of a punch.

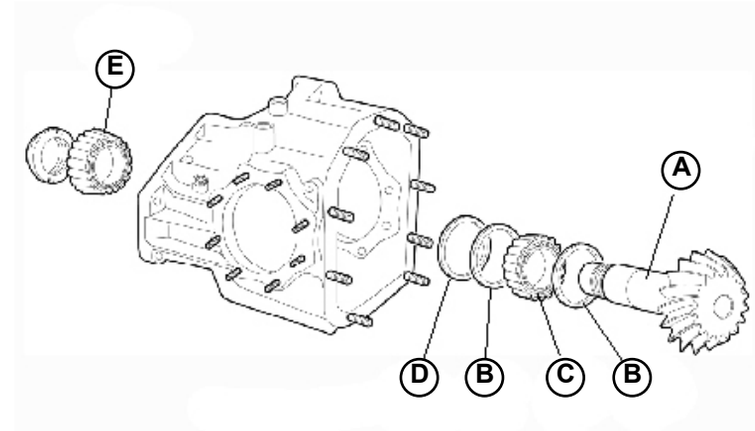

Fig.10

® Automobili Lamborghini S.p.A.
The information and procedures published below are strictly confidential and exclusively for the Lamborghini Dealer Network and Authorized Service Points. All copyrights are property of Automobili Lamborghini S.p.A based on copyright law. All of the PDF chapters in the WEB workshop manuals described below are based on information available at the time of publication. The company reserves the right to make updates and modifications. The following are prohibited: reprinting, reproduction, forwarding to unauthorized people and/or third parties, and translation, including partial, without written authorization from Automobili Lamborghini S.p.A.

Rear differential assembly

CAUTION

- All operations must be carried out with the utmost care to avoid injury to people.
- Specific tools are required for certain procedures. The use of these tools is essential to ensure safe operation.
- Follow the safety rules in force in the workshop. Specific warnings are provided in the Manual where specific precautions are required to prevent hazardous situations..
- When employing chemical products scrupulously follow the instructions shown on the safety data sheet that the supplier is required to hand over to the user.

WARNING

- All operations must be carried out with the utmost care to avoid damage to components.
- Use a depth gauge with a minimum precision of 1/100 mm for measuring.
- During the disassembly check that the elements have the correct reference marks as required.
- During the reassembly lubricate the required parts to prevent seizing during initial operation.
- During the reassembly respect the tightening torques and the adjustment data.
- Replace gaskets, seals, snap rings, safety plates, self-locking nuts, caulked edge nuts and all other worn out parts during each reassembly.
- Use Loctite/Arexons 518 sealant or Loctite/Arexons 641 sealant as instructed during the ressembly;
- Use Loctite/Arexons medium thread sealant 52A42 or Loctite/Arexons strong thread sealant 52A70 during the ressembly.

® Automobili Lamborghini S.p.A.
The information and procedures published below are strictly confidential and exclusively for the Lamborghini Dealer Network and Authorized Service Points. All copyrights are property of Automobili Lamborghini S.p.A based on copyright law. All of the PDF chapters in the WEB workshop manuals described below are based on information available at the time of publication. The company reserves the right to make updates and modifications. The following are prohibited: reprinting, reproduction, forwarding to unauthorized people and/or third parties, and translation, including partial, without written authorization from Automobili Lamborghini S.p.A.

Follow the removal procedure in reverse order, and in particular:

- Install the rear differential on the engine tightening the nuts to the prescribed tightening torque;
  differential mounting nuts: **tightening torque (000800-5a)**

- Pour the correct quantity of prescribed oil in the rear differential and check for leaks.

- Install the power steering pump support frame, A/C compressor and alternator (4 screws).

- Install the alternator and its heat-proof screen to the differential side plate.

- Fasten the axle shaft heat-proof screens.

- Once the train power assembly has been installed, connect the rear axle shafts to the differential tightening the screws to the prescribed tightening torque;
  axle shaft mounting screws: **tightening torque (000800-26d)**

- Install the silentblock and fasten it by means of a bolt; tighten as necessary.

® Automobili Lamborghini S.p.A.
The information and procedures published below are strictly confidential and exclusively for the Lamborghini Dealer Network and Authorized Service Points. All copyrights are property of Automobili Lamborghini S.p.A based on copyright law. All of the PDF chapters in the WEB workshop manuals described below are based on information available at the time of publication. The company reserves the right to make updates and modifications. The following are prohibited: reprinting, reproduction, forwarding to unauthorized people and/or third parties, and translation, including partial, without written authorization from Automobili Lamborghini S.p.A.

CAUTION

Use suitable tools for handling the assembly.
Make sure that the assembly is correctly fastened and stable to prevent it from tipping over or falling.

STOP **The assembly can be fastened to a bracket using the differential mounting holes on the cover to the engine.**

Fig.1

® Automobili Lamborghini S.p.A.
The information and procedures published below are strictly confidential and exclusively for the Lamborghini Dealer Network and Authorized Service Points. All copyrights are property of Automobili Lamborghini S.p.A based on copyright law. All of the PDF chapters in the WEB workshop manuals described below are based on information available at the time of publication. The company reserves the right to make updates and modifications. The following are prohibited: reprinting, reproduction, forwarding to unauthorized people and/or third parties, and translation, including partial, without written authorization from Automobili Lamborghini S.p.A.

Proceed as follows:

- Install the prescribed tentative adjusting shims A and B:
  tentative adjusting shim A: sA=1.75 mm
  tentative adjusting shim B: sB=1.10 mm

- Position the differential assembly in the carrier, then install the differential flanges on both sides and tighten to the prescribed tightening torque:
  differential flange nuts: **tightening torque (000800-3b)**

STOP **The support bracket assembly is not necessary.**

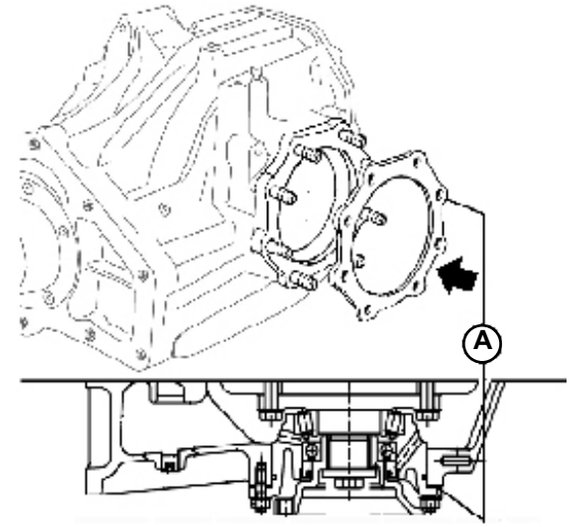

Fig.2

® Automobili Lamborghini S.p.A.
The information and procedures published below are strictly confidential and exclusively for the Lamborghini Dealer Network and Authorized Service Points. All copyrights are property of Automobili Lamborghini S.p.A based on copyright law. All of the PDF chapters in the WEB workshop manuals described below are based on information available at the time of publication. The company reserves the right to make updates and modifications. The following are prohibited: reprinting, reproduction, forwarding to unauthorized people and/or third parties, and translation, including partial, without written authorization from Automobili Lamborghini S.p.A.

- Introduce the pinion in the carrier and lock it into place
- Remove the axle side bearing (**A-Fig.3**).
- Install the locking ring nut (**B-Fig.3**) and lock it by means of P/N 62395079 special wrench and using Molycote 1000.

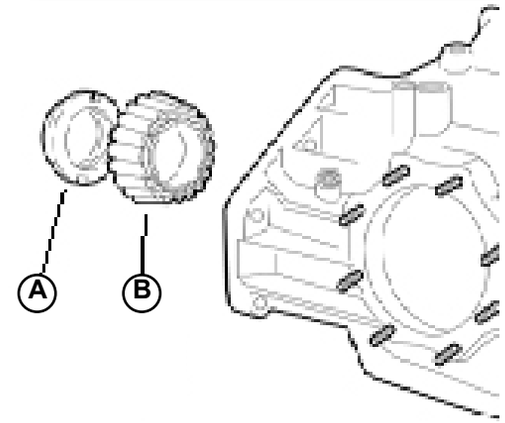

Fig.3

® Automobili Lamborghini S.p.A.
The information and procedures published below are strictly confidential and exclusively for the Lamborghini Dealer Network and Authorized Service Points. All copyrights are property of Automobili Lamborghini S.p.A based on copyright law. All of the PDF chapters in the WEB workshop manuals described below are based on information available at the time of publication. The company reserves the right to make updates and modifications. The following are prohibited: reprinting, reproduction, forwarding to unauthorized people and/or third parties, and translation, including partial, without written authorization from Automobili Lamborghini S.p.A.

- Use a suitable pad to install the oil seal (**A-Fig.4**) on the input flange (**C-Fig.4**).
- Install a new seal (**B-Fig.4**) on the input flange (**C-Fig.4**).
- Apply Molycote 1000 on the seal and on the input flange bearing surface.
- Position the input flange so that the lubrication hole on the differential carrier is free.
- Fasten the flange by means of the 6 socket head screws.

Fig.4

® Automobili Lamborghini S.p.A.
The information and procedures published below are strictly confidential and exclusively for the Lamborghini Dealer Network and Authorized Service Points. All copyrights are property of Automobili Lamborghini S.p.A based on copyright law. All of the PDF chapters in the WEB workshop manuals described below are based on information available at the time of publication. The company reserves the right to make updates and modifications. The following are prohibited: reprinting, reproduction, forwarding to unauthorized people and/or third parties, and translation, including partial, without written authorization from Automobili Lamborghini S.p.A.

- Apply Loctite 518 sealant on the union surface between carrier and differential flanges. Install the flanges tightening the nuts to the prescribed tightening torque:
  differential flange nuts: **tightening torque (000800-3b)**

STOP **The strip of sealant must be seamless. The sealant must get inside the screw and centering pin holes (see detail).**

- install the supporting plate unscrewing and then tightening the two nuts to the prescribed tightening torque.

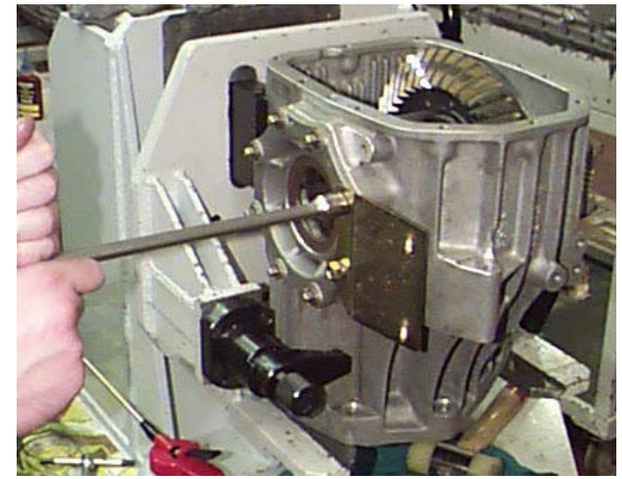

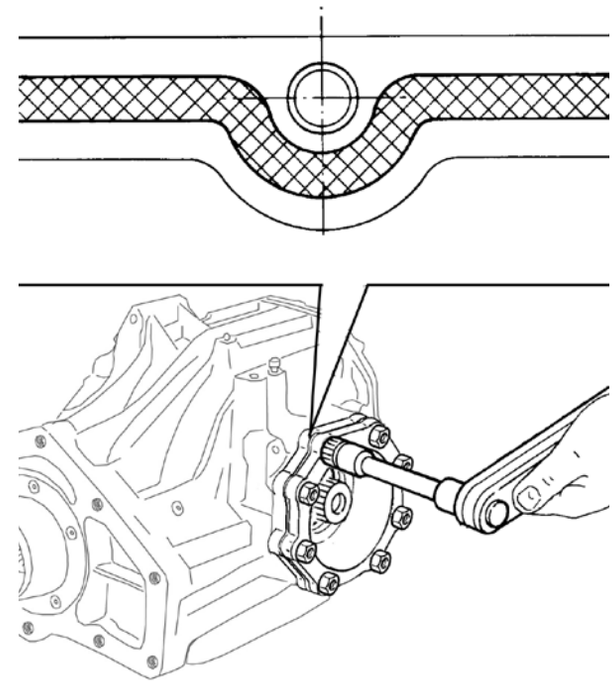

Fig.5

® Automobili Lamborghini S.p.A.
The information and procedures published below are strictly confidential and exclusively for the Lamborghini Dealer Network and Authorized Service Points. All copyrights are property of Automobili Lamborghini S.p.A based on copyright law. All of the PDF chapters in the WEB workshop manuals described below are based on information available at the time of publication. The company reserves the right to make updates and modifications. The following are prohibited: reprinting, reproduction, forwarding to unauthorized people and/or third parties, and translation, including partial, without written authorization from Automobili Lamborghini S.p.A.

- **Use a suitable pad to install the bearing and the seal; repeat the operation on the other side.**

STOP **Respect the ring direction: (A-Fig.6) inner side, (B-Fig.6) outer side.**

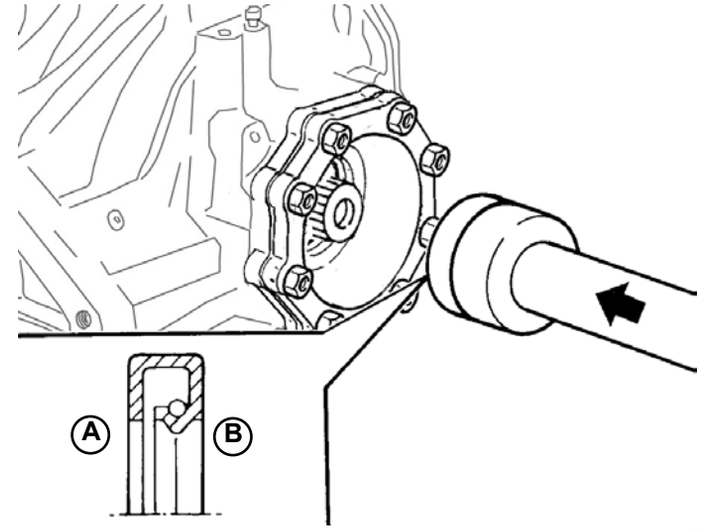

Fig.6

® Automobili Lamborghini S.p.A.
The information and procedures published below are strictly confidential and exclusively for the Lamborghini Dealer Network and Authorized Service Points. All copyrights are property of Automobili Lamborghini S.p.A based on copyright law. All of the PDF chapters in the WEB workshop manuals described below are based on information available at the time of publication. The company reserves the right to make updates and modifications. The following are prohibited: reprinting, reproduction, forwarding to unauthorized people and/or third parties, and translation, including partial, without written authorization from Automobili Lamborghini S.p.A.

- Apply Loctite 641 sealant on the shaft groove, apply sealing paste on the innerside of the washer, install the axle shaft flange, lubricate with Molycote 1000 and tighten the screw to the prescribed tightening torque.
  axle shaft flange screw: **tightening torque (000800-3b/c)**

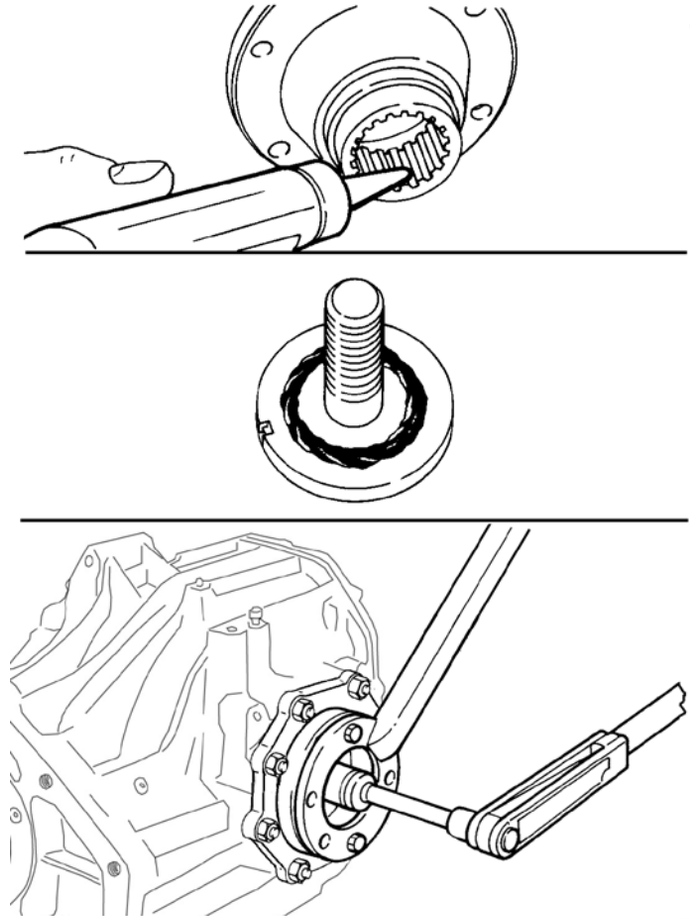

Fig.7

® Automobili Lamborghini S.p.A.
The information and procedures published below are strictly confidential and exclusively for the Lamborghini Dealer Network and Authorized Service Points. All copyrights are property of Automobili Lamborghini S.p.A based on copyright law. All of the PDF chapters in the WEB workshop manuals described below are based on information available at the time of publication. The company reserves the right to make updates and modifications. The following are prohibited: reprinting, reproduction, forwarding to unauthorized people and/or third parties, and translation, including partial, without written authorization from Automobili Lamborghini S.p.A.

- Apply Loctite 518 sealant on the union surface between carrier and carrier cover. Install the differential carrier cover tightening the screws to the prescribed tightening torque:
  carrier cover screws: **tightening torque (000800-6a/b)**

STOP **The strip of sealant must be seamless. The sealant must get inside the screw and centering pin holes.**

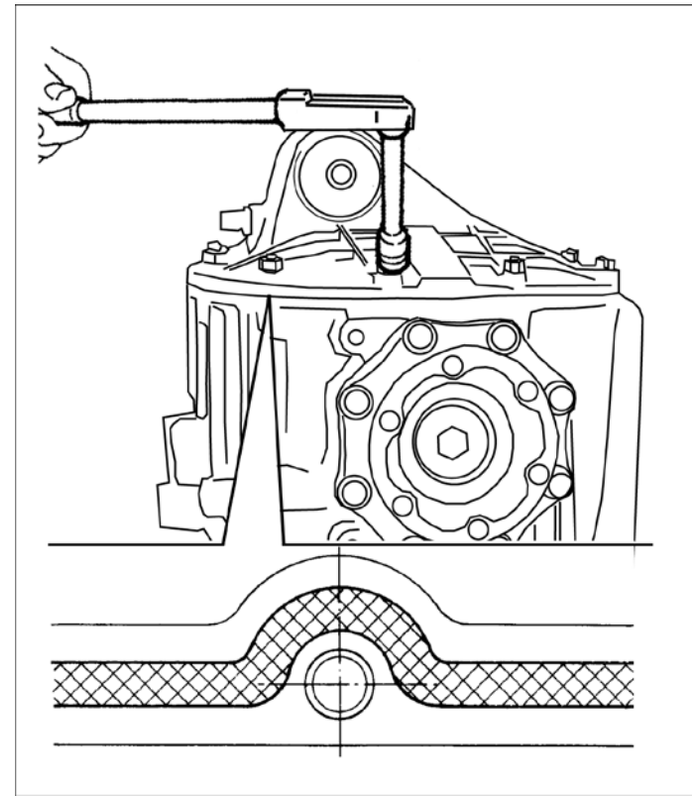

Fig.8

® Automobili Lamborghini S.p.A.
The information and procedures published below are strictly confidential and exclusively for the Lamborghini Dealer Network and Authorized Service Points. All copyrights are property of Automobili Lamborghini S.p.A based on copyright law. All of the PDF chapters in the WEB workshop manuals described below are based on information available at the time of publication. The company reserves the right to make updates and modifications. The following are prohibited: reprinting, reproduction, forwarding to unauthorized people and/or third parties, and translation, including partial, without written authorization from Automobili Lamborghini S.p.A.

Rear differential oil substitution

- Remove the draining plug (**A-Fig.1)** and allow the differential oil to drain out; clean the plug and then tighten it to the prescribed tightening torque:
  Oil drain plug: **tightening torque (000800-4a/b)**

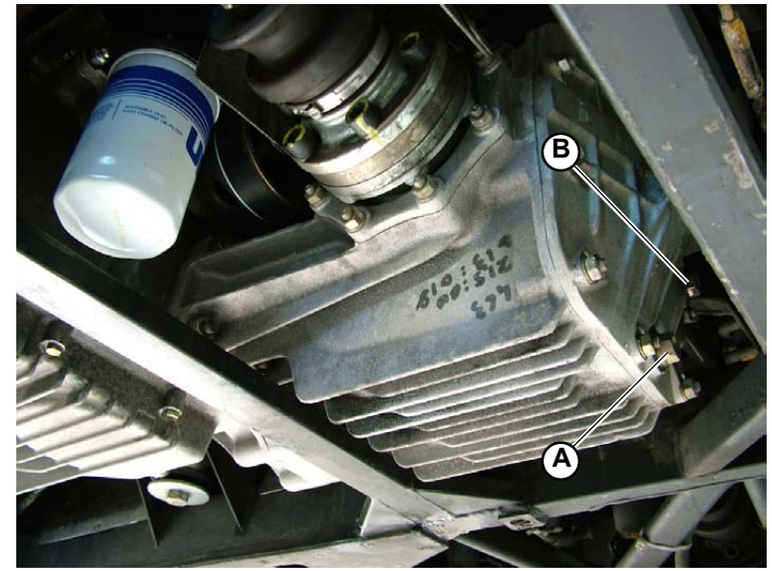

Fig.1

- Pour in oil of the prescribed type through the filler (**B-Fig.1**) until the oil level reaches the lower edge of the filler; clean the plug and then tighten it to the prescribed tightening torque:
  Oil filling plug: **tightening torque (000800-4a/b)**

Rear differential oil type	**(000300)**

® Automobili Lamborghini S.p.A.
The information and procedures published below are strictly confidential and exclusively for the Lamborghini Dealer Network and Authorized Service Points. All copyrights are property of Automobili Lamborghini S.p.A based on copyright law. All of the PDF chapters in the WEB workshop manuals described below are based on information available at the time of publication. The company reserves the right to make updates and modifications. The following are prohibited: reprinting, reproduction, forwarding to unauthorized people and/or third parties, and translation, including partial, without written authorization from Automobili Lamborghini S.p.A.

Rear differential overhaul

STOP The following procedures can only be completely carried out after removing the rear differential (050903) from the vehicle.

- Remove the oil seal (**A-Fig.1**).
- Remove the bearing (**B-Fig.1**) by means of a pad; check for seizing and noise.

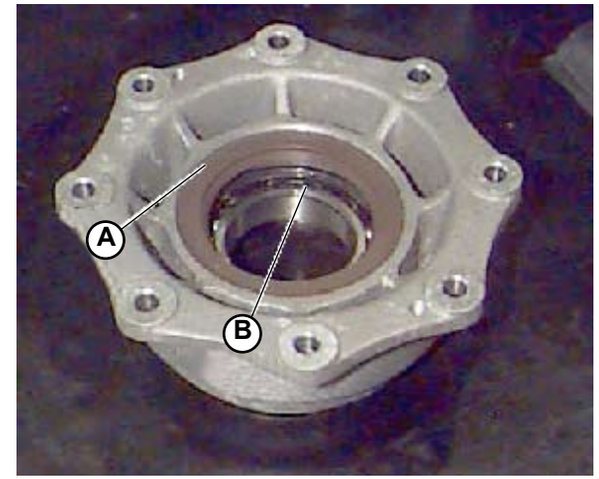

Fig.1

- Check the conditions of differential roller bearing outer ring (**C-Fig.2**) without any traces of overheating or damage; in case the bearing requires replacement, warm the flange and remove the outer ring by means of a suitable puller.

Fig.2

® Automobili Lamborghini S.p.A.
The information and procedures published below are strictly confidential and exclusively for the Lamborghini Dealer Network and Authorized Service Points. All copyrights are property of Automobili Lamborghini S.p.A based on copyright law. All of the PDF chapters in the WEB workshop manuals described below are based on information available at the time of publication. The company reserves the right to make updates and modifications. The following are prohibited: reprinting, reproduction, forwarding to unauthorized people and/or third parties, and translation, including partial, without written authorization from Automobili Lamborghini S.p.A.

During the reassembly for each differential flange:

- Introduce the roller bearing outer ring (**A-Fig.3**) if previously removed, by means of a suitable pad.
- Then, from the other side of the flange, introduce the ball bearing (**B-Fig.3**) and the oil seal (**C-Fig.3**) respecting its direction.
- Install the O-ring (**D-Fig.3**).

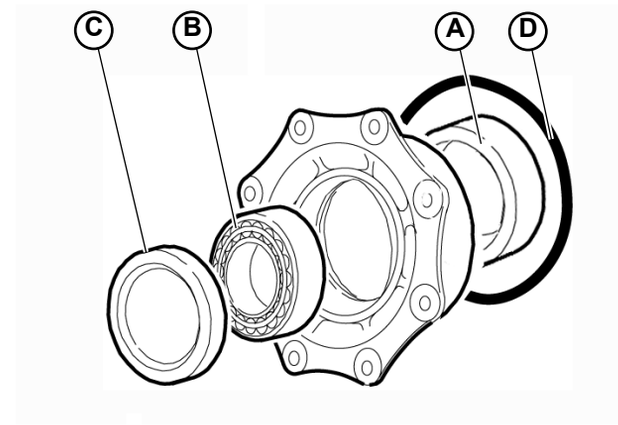

Fig.3

- Use a suitable puller and introduce a spacer to remove the roller bearing (**Fig.4**); repeat the operation on the other side.

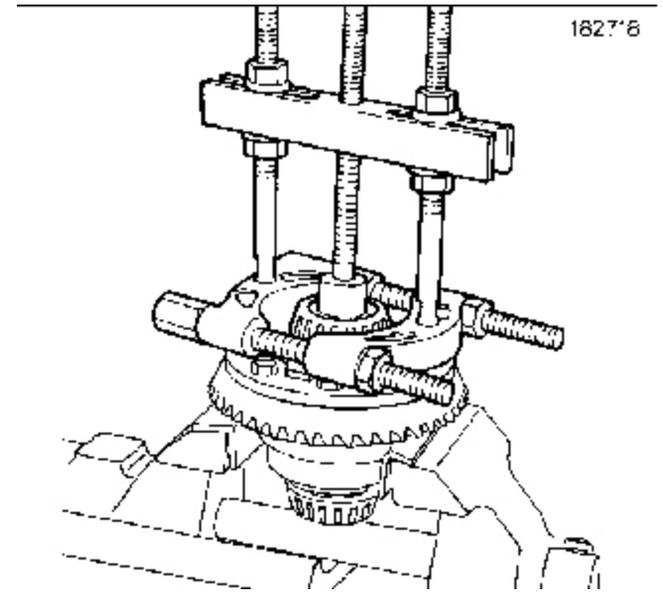

Fig.4

® Automobili Lamborghini S.p.A.
The information and procedures published below are strictly confidential and exclusively for the Lamborghini Dealer Network and Authorized Service Points. All copyrights are property of Automobili Lamborghini S.p.A based on copyright law. All of the PDF chapters in the WEB workshop manuals described below are based on information available at the time of publication. The company reserves the right to make updates and modifications. The following are prohibited: reprinting, reproduction, forwarding to unauthorized people and/or third parties, and translation, including partial, without written authorization from Automobili Lamborghini S.p.A.

- Unscrew the mounting screws and remove the crown from the planetary gear set (**Fig.5**).

STOP **The planetary gear set cannot be disassembled.**
In case of failure, replace the entire carrier.

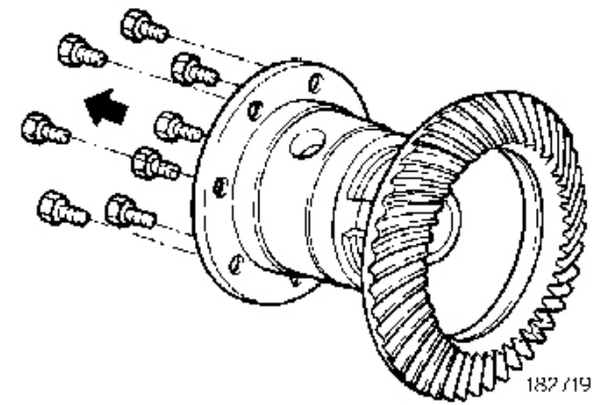

Fig.5

- Clean accurately all components.
- Check that the crown tooth profile surfaces are not cracked or scratched.
- Check that the bearings are in good conditions, without traces of overheating and that the races, the turning parts or the cages are not damaged.
- Check that the threading and the grooved profiles are not dented or scratched.

STOP **Always replace the corresponding crown or the pinion after replacing the pinion or the crown.**

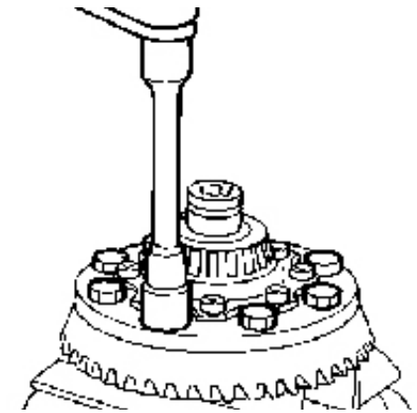
Fig.6

- Introduce the crown on the planetary gear set and apply strong thread stop Loctite 52A70 and tighten the mounting screws in a crossed order to the prescribed tightening torque (**Fig.6**):
  crown screws: **tightening torque (000800-3a/b)**
- Use a suitable pad to install the roller bearing (**Fig.7**); repeat the operation on the other side.

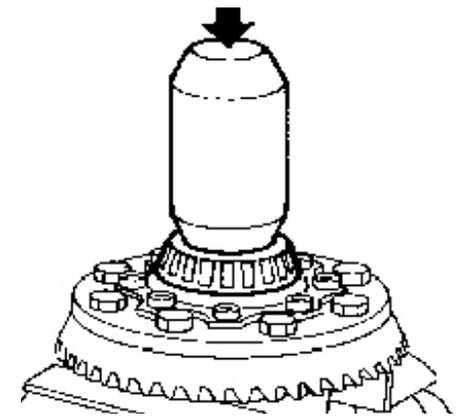
Fig.7

® Automobili Lamborghini S.p.A.
The information and procedures published below are strictly confidential and exclusively for the Lamborghini Dealer Network and Authorized Service Points. All copyrights are property of Automobili Lamborghini S.p.A based on copyright law. All of the PDF chapters in the WEB workshop manuals described below are based on information available at the time of publication. The company reserves the right to make updates and modifications. The following are prohibited: reprinting, reproduction, forwarding to unauthorized people and/or third parties, and translation, including partial, without written authorization from Automobili Lamborghini S.p.A.

- Use a suitable puller to remove the inner bearing from the pinion (**Fig.8**).
- Clean accurately all components.
- Check that the pinion tooth profile surfaces are not cracked or scratched.
- Check that the pinion bearings are in good conditions, without traces of overheating and that the races, the turning parts or the cages are not damaged.

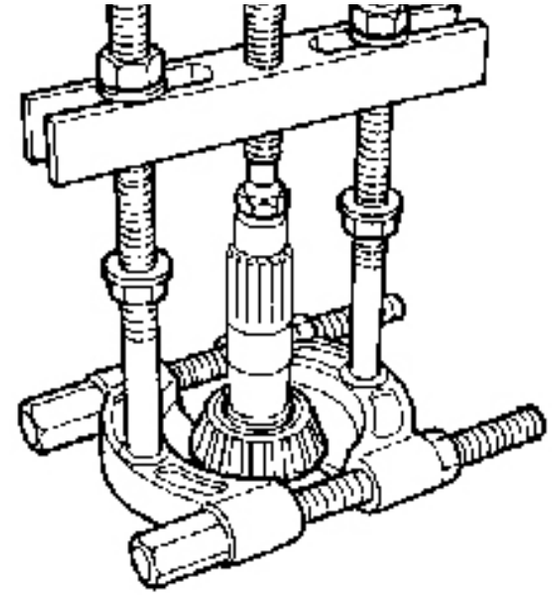

Fig.8

® Automobili Lamborghini S.p.A.
The information and procedures published below are strictly confidential and exclusively for the Lamborghini Dealer Network and Authorized Service Points. All copyrights are property of Automobili Lamborghini S.p.A based on copyright law. All of the PDF chapters in the WEB workshop manuals described below are based on information available at the time of publication. The company reserves the right to make updates and modifications. The following are prohibited: reprinting, reproduction, forwarding to unauthorized people and/or third parties, and translation, including partial, without written authorization from Automobili Lamborghini S.p.A.

Disassembling the rear anti-roll bar

Preliminary operations

- Lift the vehicle on the car lift **(000000)**.
- Remove both rear wheels **(060103)**.

Disassembling the anti-roll bar

1. Remove the two mounting bolts (**A-Fig.1**).
2. Remove the bolt (**B-Fig.1**) and disassemble the connecting rod.

Repeat the two steps above on both sides (right/left) of the anti-roll bar.

3. Remove the anti-roll bar.

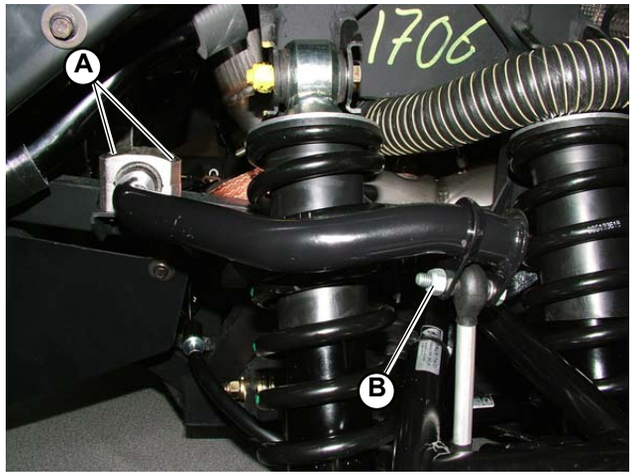

Fig.1

® Automobili Lamborghini S.p.A.
The information and procedures published below are strictly confidential and exclusively for the Lamborghini Dealer Network and Authorized Service Points. All copyrights are property of Automobili Lamborghini S.p.A based on copyright law. All of the PDF chapters in the WEB workshop manuals described below are based on information available at the time of publication. The company reserves the right to make updates and modifications. The following are prohibited: reprinting, reproduction, forwarding to unauthorized people and/or third parties, and translation, including partial, without written authorization from Automobili Lamborghini S.p.A.

Assembling the rear anti-roll bar

1. Position the anti-roll bar and tighten the two mounting bolts (**A-Fig.1**).
   Bolt attachment: **tightening torque (000800).**
2. Assemble the connecting rod and tighten the bolt (**B-Fig.1**).

Repeat the two steps above on both sides (right/left) of the anti-roll bar.

- Assemble the rear wheels **(060105)**.

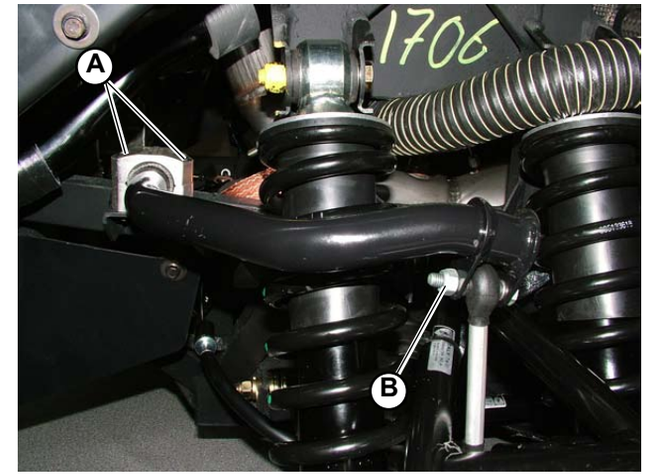

Fig.1

® Automobili Lamborghini S.p.A.
The information and procedures published below are strictly confidential and exclusively for the Lamborghini Dealer Network and Authorized Service Points. All copyrights are property of Automobili Lamborghini S.p.A based on copyright law. All of the PDF chapters in the WEB workshop manuals described below are based on information available at the time of publication. The company reserves the right to make updates and modifications. The following are prohibited: reprinting, reproduction, forwarding to unauthorized people and/or third parties, and translation, including partial, without written authorization from Automobili Lamborghini S.p.A.

Rear springs check

Check the tightening torques (000800) and the integrity of the suspension arms regularly.

® Automobili Lamborghini S.p.A.
The information and procedures published below are strictly confidential and exclusively for the Lamborghini Dealer Network and Authorized Service Points. All copyrights are property of Automobili Lamborghini S.p.A based on copyright law. All of the PDF chapters in the WEB workshop manuals described below are based on information available at the time of publication. The company reserves the right to make updates and modifications. The following are prohibited: reprinting, reproduction, forwarding to unauthorized people and/or third parties, and translation, including partial, without written authorization from Automobili Lamborghini S.p.A.

Rear suspension disassembly

Preliminary operations

- Lift the vehicle on the car lift **(000000)**.
- Disassemble the wheel **(060103)**.
- Disassemble the wheel arch **(082103)**.
- Remove the ABS sensors connectors and the pad thickness sensor.
- Disassemble the brake caliper (do not remove the oil connection since the caliper can be set laterally to the block) **(060703)**.
- Disassemble the parking brake (the caliper can be set laterally to the block) **(060203)**.
- Disassemble the two shock absorbers **(051303)**.

Suspension disassembly

1. Disassemble the connecting rod of the stabilizer bar (**A-Fig.1**).

- Disconnect the axle shaft from the rear differential **(050103)**.

STOP **Before disassembling the suspension arms, the position of the shims in the arms must be marked so that they may be repositioned in the same place during reassembly.**

2. Unscrew the two upper bolts and the two lower bolts (**B-Fig.1/2/3**) that secure the suspension arms.
3. Remove the suspensions.

Fig.1

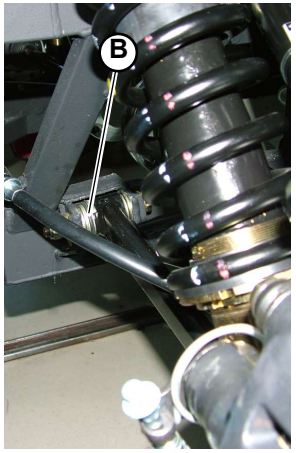

Fig.2

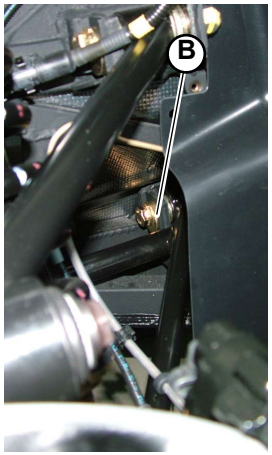

Fig.3

® Automobili Lamborghini S.p.A.
The information and procedures published below are strictly confidential and exclusively for the Lamborghini Dealer Network and Authorized Service Points. All copyrights are property of Automobili Lamborghini S.p.A based on copyright law. All of the PDF chapters in the WEB workshop manuals described below are based on information available at the time of publication. The company reserves the right to make updates and modifications. The following are prohibited: reprinting, reproduction, forwarding to unauthorized people and/or third parties, and translation, including partial, without written authorization from Automobili Lamborghini S.p.A.

Rear suspension assembly

1. Tighten the two upper bolts and the two lower bolts that secure the suspension arms (**A-Fig.1/2/3**).

STOP **Reassemble the arms, positioning the shims in the same place prior to disassembly.**

- Connect the axle shaft to the rear differential **(050105)**.

2. Assemble the connecting rod of the stabilizer bar (**B-Fig.1**).

- Assemble the shock absorbers **(051305)**.
- Assemble the brake caliper **(060705)**.
- Assemble the parking brake caliper **(060205)**.
- Attach the ABS sensors connectors and the pad thickness sensor.
- Assemble the wheel arch **(082105)**.
- Assemble the wheel **(060105)**.

STOP **After assembling the suspensions, the wheels must be aligned (cam position modification) so that the correct toe-in and caster is restored.**

Fig.1

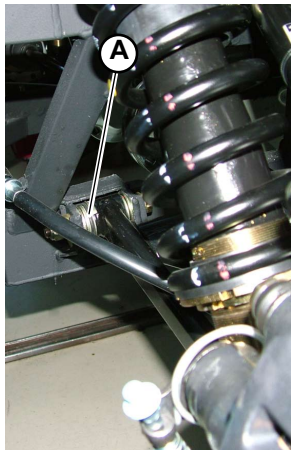

Fig.2

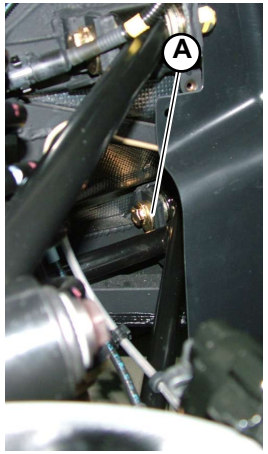

Fig.3

® Automobili Lamborghini S.p.A.
The information and procedures published below are strictly confidential and exclusively for the Lamborghini Dealer Network and Authorized Service Points. All copyrights are property of Automobili Lamborghini S.p.A based on copyright law. All of the PDF chapters in the WEB workshop manuals described below are based on information available at the time of publication. The company reserves the right to make updates and modifications. The following are prohibited: reprinting, reproduction, forwarding to unauthorized people and/or third parties, and translation, including partial, without written authorization from Automobili Lamborghini S.p.A.

Shock absorber

The FSD shock absorbers were expressly designed for use on sports cars and combine comfort and roadholding without compromises.

To guarantee excellent roadholding in sports cars, high-damping shock absorbers (very rigid) are necessary that cannot, however, compensate for the quick movements caused by the road surface; as a result driving comfort is compromised.

The FSD shock absorbers automatically consider the frequency of the movements caused to the vehicle by the road surface and reduce, through a special internal control valve, the damping force for high frequencies (high-speed movement).

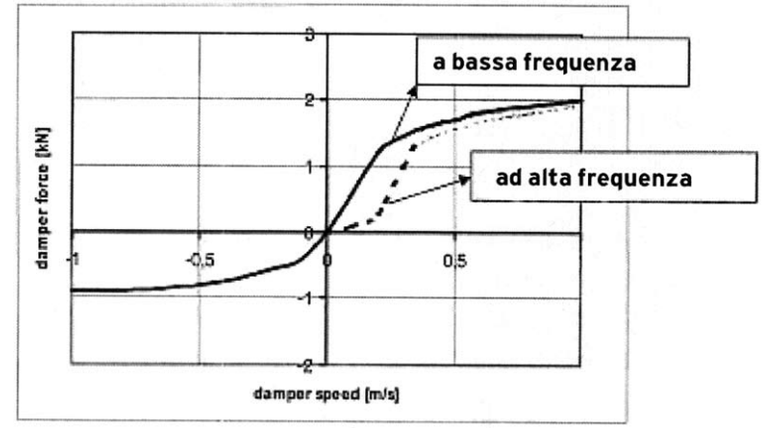

® Automobili Lamborghini S.p.A.
The information and procedures published below are strictly confidential and exclusively for the Lamborghini Dealer Network and Authorized Service Points. All copyrights are property of Automobili Lamborghini S.p.A based on copyright law. All of the PDF chapters in the WEB workshop manuals described below are based on information available at the time of publication. The company reserves the right to make updates and modifications. The following are prohibited: reprinting, reproduction, forwarding to unauthorized people and/or third parties, and translation, including partial, without written authorization from Automobili Lamborghini S.p.A.

Rear shock absorbers disassembly

Preliminary operations

- Lift the vehicle on the car lift **(000000)**.
- Disassemble the wheel **(060103)**.

Shock absorbers disassembly

1. Free the two shock absorbers (**A-Fig.1**) on the wheel by unscrewing the four bolts (**B-Fig.1/2/3**) (two bolts per shock absorber: one upper and one lower).
2. Remove the two shock absorbers.

The vehicle has two shock absorbers for each rear wheel and one for each front wheel.

After the shock absorbers have been disassembled and free them from the springs:

1. Position the shock absorbers on the special tool to remove the springs.
2. Compress the springs.
3. Remove the stops (**C-Fig.4**) on the shock absorbers.
4. Extract the springs.

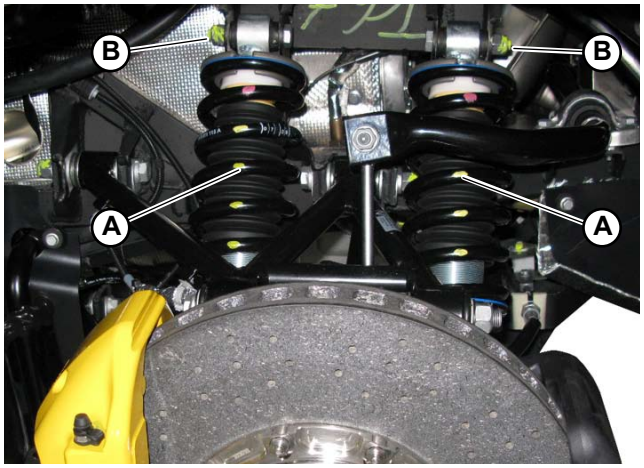

Fig.1

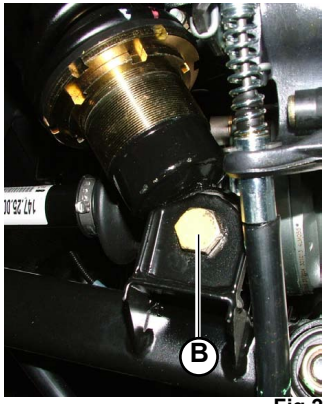

Fig.2

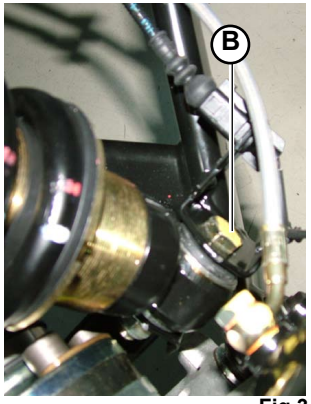

Fig.3

Fig.4

® Automobili Lamborghini S.p.A.
The information and procedures published below are strictly confidential and exclusively for the Lamborghini Dealer Network and Authorized Service Points. All copyrights are property of Automobili Lamborghini S.p.A based on copyright law. All of the PDF chapters in the WEB workshop manuals described below are based on information available at the time of publication. The company reserves the right to make updates and modifications. The following are prohibited: reprinting, reproduction, forwarding to unauthorized people and/or third parties, and translation, including partial, without written authorization from Automobili Lamborghini S.p.A.

Rear shock absorbers assembly

To assemble the springs on the shock absorbers:

1. Position the shock absorbers on the special tool for inserting the springs.
2. Insert the springs.
3. Compress the springs until they can be secured on the shock absorbers with the stop (**A-Fig.1**).
4. Adjust the spring's rigidity using the threaded ring nut (**B-Fig.1**).

Fig.1

STOP

- **When the spring is assembled the ring nut must be placed in the same position as the spring at the time of disassembly.**
- **Always reassemble the springs on the same shock absorbers where they were located prior to disassembly.**

Proceed by assembling the shock absorbers with the vehicle raised on the car lift, using the following procedure:

1. Assemble the two shock absorbers (**C-Fig.2**) by securing them with the four special bolts (**D-Fig.2/3/4**) (two bolts per shock absorber: one upper and one lower).

- Assemble the wheel **(060105)**.

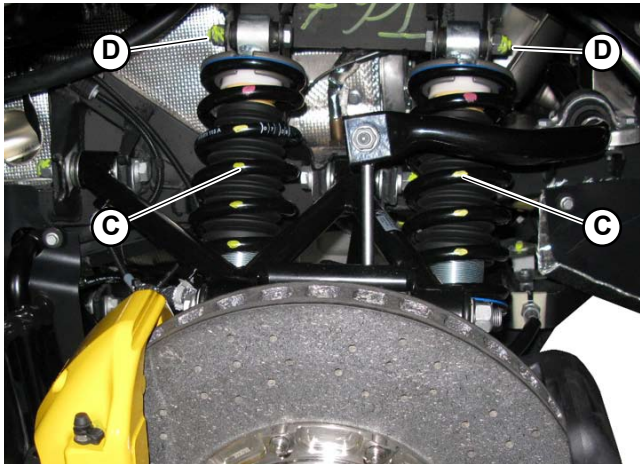

Fig.2

The vehicle has two shock absorbers for each rear wheel and one for each front wheel.

STOP

After assembly, always check the vehicle's height above the ground. The front and rear must have different heights from the ground:

- **142÷147 mm from the ground at the front of the chassis**
- **129÷134 mm from the ground at the rear of the chassis**

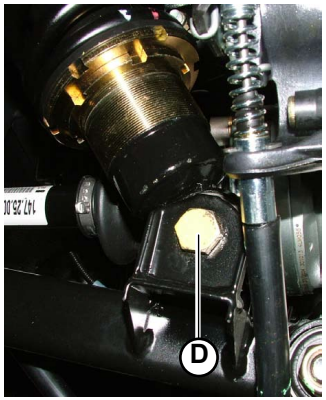

Fig.3

Fig.4

® Automobili Lamborghini S.p.A.
The information and procedures published below are strictly confidential and exclusively for the Lamborghini Dealer Network and Authorized Service Points. All copyrights are property of Automobili Lamborghini S.p.A based on copyright law. All of the PDF chapters in the WEB workshop manuals described below are based on information available at the time of publication. The company reserves the right to make updates and modifications. The following are prohibited: reprinting, reproduction, forwarding to unauthorized people and/or third parties, and translation, including partial, without written authorization from Automobili Lamborghini S.p.A.

Propeller shaft disassembly

STOP The following procedures can only be completely carried out after removing the gearbox (030103) from the vehicle.

- Unscrew the 6 propeller shaft pipe mounting screws to the oil pump and remove the pipe with the propeller shaft.

NOTE
The bracket removal and the gearbox pump disassemble are not necessary.

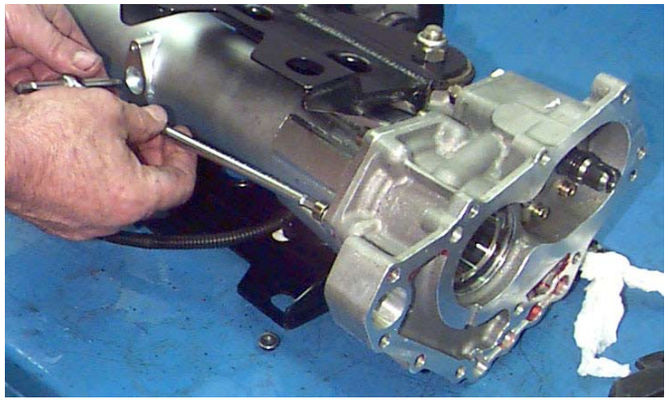

Fig.1

® Automobili Lamborghini S.p.A.
The information and procedures published below are strictly confidential and exclusively for the Lamborghini Dealer Network and Authorized Service Points. All copyrights are property of Automobili Lamborghini S.p.A based on copyright law. All of the PDF chapters in the WEB workshop manuals described below are based on information available at the time of publication. The company reserves the right to make updates and modifications. The following are prohibited: reprinting, reproduction, forwarding to unauthorized people and/or third parties, and translation, including partial, without written authorization from Automobili Lamborghini S.p.A.

Propeller shaft assembly

1. Insert the front propeller shaft with the bearing retaining snap ring facing forward on the pump side of the pipe.

2. Position the shaft's flange against the gearbox oil pump's housing inserting Locktite 518 and securing it with screws, tightening them as needed.

- Install the gearbox **(030105)**.

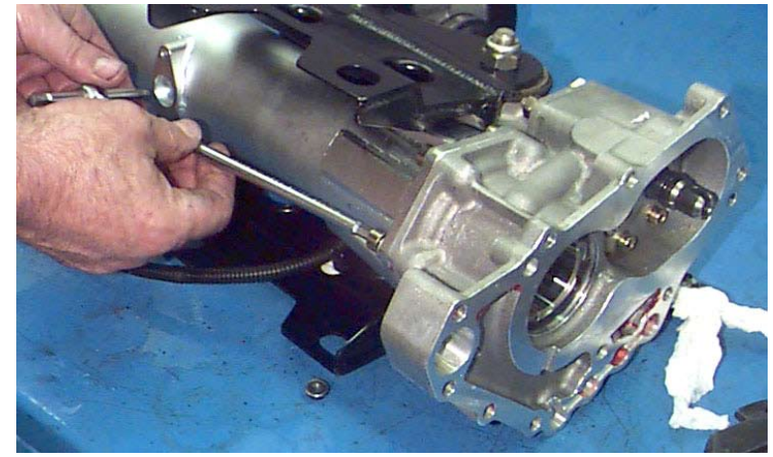

Fig.1

® Automobili Lamborghini S.p.A.
The information and procedures published below are strictly confidential and exclusively for the Lamborghini Dealer Network and Authorized Service Points. All copyrights are property of Automobili Lamborghini S.p.A based on copyright law. All of the PDF chapters in the WEB workshop manuals described below are based on information available at the time of publication. The company reserves the right to make updates and modifications. The following are prohibited: reprinting, reproduction, forwarding to unauthorized people and/or third parties, and translation, including partial, without written authorization from Automobili Lamborghini S.p.A.

Wheels, Brakes

The brake system is hydraulically controlled with brake booster and ABS. The system components are:

- four disk brakes;
- hydraulic pump with brake booster;
- ABS electro-hydraulic control unit;
- brake liquid reservoir with " low level " indicator;
- vacuum tank.

Brake system layout (Fig.1)	
A.	Brake pump with brake booster
B.	Brake and clutch fluid reservoir
C.	ABS electro-hydraulic control unit
D.	Vacuum tank
E.	Rear brake calipers
F.	Front brake calipers
G.	Wheel speed sensors (pick-up)

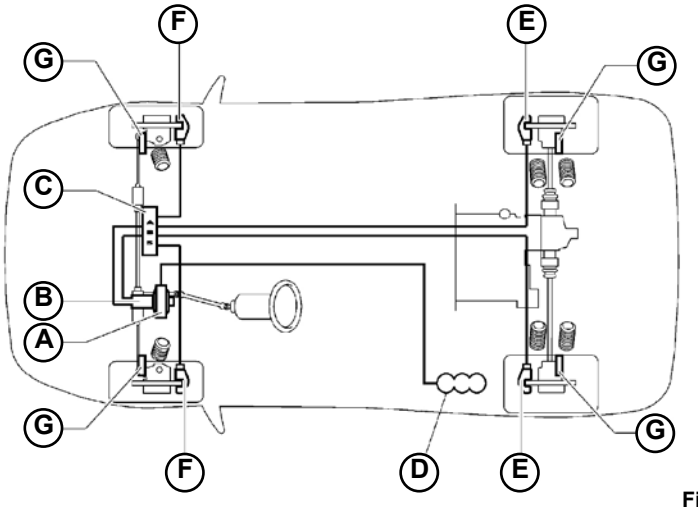

Fig.1

The electro-hydraulic control unit monitors brake fluid pressure on each wheel. The control unit corrects the braking action detected by the pick-up sensors according to the speed of each wheel.
To ensure the quality of the signal the distance between the pick-up sensor and the phonic wheel must be within 0.9 ÷ 1.0 mm.

The electro-hydraulic control unit performs braking corrections by means of 4 ISO valves and 4 DUMP valves. When an ISO valve is closed, the related caliper is disconnected from the hydraulic pump. The DUMP valve discharges the hydraulic circuit pressure from the related brake caliper.

If the ABS warning light on the dashboard turns on and the buzzer activates during normal driving, then the ABS control unit has detected a fault. When the warning light is on, the ABS system is inhibited, i.e. the brake system operates normally but the electronic braking control is deactivated.

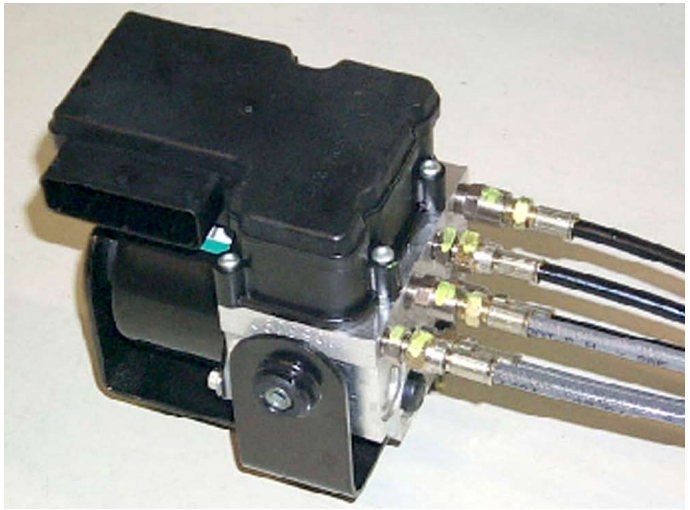
Fig.2

® Automobili Lamborghini S.p.A.
The information and procedures published below are strictly confidential and exclusively for the Lamborghini Dealer Network and Authorized Service Points. All copyrights are property of Automobili Lamborghini S.p.A based on copyright law. All of the PDF chapters in the WEB workshop manuals described below are based on information available at the time of publication. The company reserves the right to make updates and modifications. The following are prohibited: reprinting, reproduction, forwarding to unauthorized people and/or third parties, and translation, including partial, without written authorization from Automobili Lamborghini S.p.A.

Brake disks *(Carbon Ceramic)*	**Front**	**Rear**
Diameter	380	380
Nominal thickness	38	38
Minimum allowed thickness after grinding	32	30
Parallelism tolerance of the two disk faces	0.020	
Max. surface roughness	RK 4,0 RpK 2,0 max	

Brembo brake calipers	**6 wheel cylinders**	**6 wheel cylinders**
Wheel cylinder bore	32 / 36 / 38 mm	32 / 36 / 38 mm

Brake pads Pagid type	**Lining**	**HP 1000/1**
Thickness when new *(Carbon Ceramic)*	17.75	17.75
Minimum allowed thickness *(Carbon Ceramic)*	7	7

Brake booster	
Type	vacuum
Wheel cylinder bore	246 mm

Pump	
Type	Tandem
Wheel cylinder bore	26.99 mm
Front wheel cylinder stroke	18 + 18

® Automobili Lamborghini S.p.A.
The information and procedures published below are strictly confidential and exclusively for the Lamborghini Dealer Network and Authorized Service Points. All copyrights are property of Automobili Lamborghini S.p.A based on copyright law. All of the PDF chapters in the WEB workshop manuals described below are based on information available at the time of publication. The company reserves the right to make updates and modifications. The following are prohibited: reprinting, reproduction, forwarding to unauthorized people and/or third parties, and translation, including partial, without written authorization from Automobili Lamborghini S.p.A.

Parking brake	
Type	disk brake on rear wheels Mechanically-operated by hand lever
Caliper cylinder bore	36
Pads	MD 558
Thickness when new	9
Minimum thickness allowed	4.5

ABS System	
Type	TRW EBC 430-EHCU ABS UNIT
Channels	Four

Aluminium alloy wheels	
Front	8,5” x 18”
Rear	13” x 18”

PIRELLI tyres with radial structure, tubeless, asymmetrical	
Front	P Zero 245/35 ZR 18 “ROSSO” or “CORSA”
Rear	P Zero 335/30 ZR 18 “ROSSO” or “CORSA”

PIRELLI Winter 240 Sottozero tyres	
Front	245/35 V 18
Rear	335/30 V 18
Max speed	240 Km/h

® Automobili Lamborghini S.p.A.
The information and procedures published below are strictly confidential and exclusively for the Lamborghini Dealer Network and Authorized Service Points. All copyrights are property of Automobili Lamborghini S.p.A based on copyright law. All of the PDF chapters in the WEB workshop manuals described below are based on information available at the time of publication. The company reserves the right to make updates and modifications. The following are prohibited: reprinting, reproduction, forwarding to unauthorized people and/or third parties, and translation, including partial, without written authorization from Automobili Lamborghini S.p.A.

Standing pressure	
Front	2.4 bar
Rear	2.4 bar

Running pressure, speed >290 Km/h	
Front	2.8 bar
Rear	2.8 bar

® Automobili Lamborghini S.p.A.
The information and procedures published below are strictly confidential and exclusively for the Lamborghini Dealer Network and Authorized Service Points. All copyrights are property of Automobili Lamborghini S.p.A based on copyright law. All of the PDF chapters in the WEB workshop manuals described below are based on information available at the time of publication. The company reserves the right to make updates and modifications. The following are prohibited: reprinting, reproduction, forwarding to unauthorized people and/or third parties, and translation, including partial, without written authorization from Automobili Lamborghini S.p.A.

Tyres check

STOP Thoroughly check the cold inflation pressure at least every two weeks (060000).

Wear indicators

Even if there is no obvious treadwear, a number of tyre specifications can change due to chemical ageing. Therefore, after a few years, resistance at high speeds and traction can diminish.

The treadwear indicator on the tyres (**A-Fig.1**) acts as a signal to warn when the tyres need replacing. Ensure the degree of wear is the same over the entire perimeter.

STOP Take the utmost care not to dent or damage the wheel rim while disassembling the wheel (060103).

CAUTION!

- **Regularly check the tyres to ensure they do not feature any signs of damage and that foreign bodies have not caused any structural damage (this type of damage can only be diagnosed following disassembly).**
- **PIRELLI P ZERO “ROSSO” or “CORSA” tyres are asymmetric and cannot be reversed on the wheel rim. To ensure they are correctly assembled, the word “ESTERNO” must appear on the externally visible side of the tyre.**
- **Any non-original tyres and/or wheel rims shall be detrimental to the warranty.**
- **Do not change the tyres on just one axle. Always change all 4 tyres at the same time.**

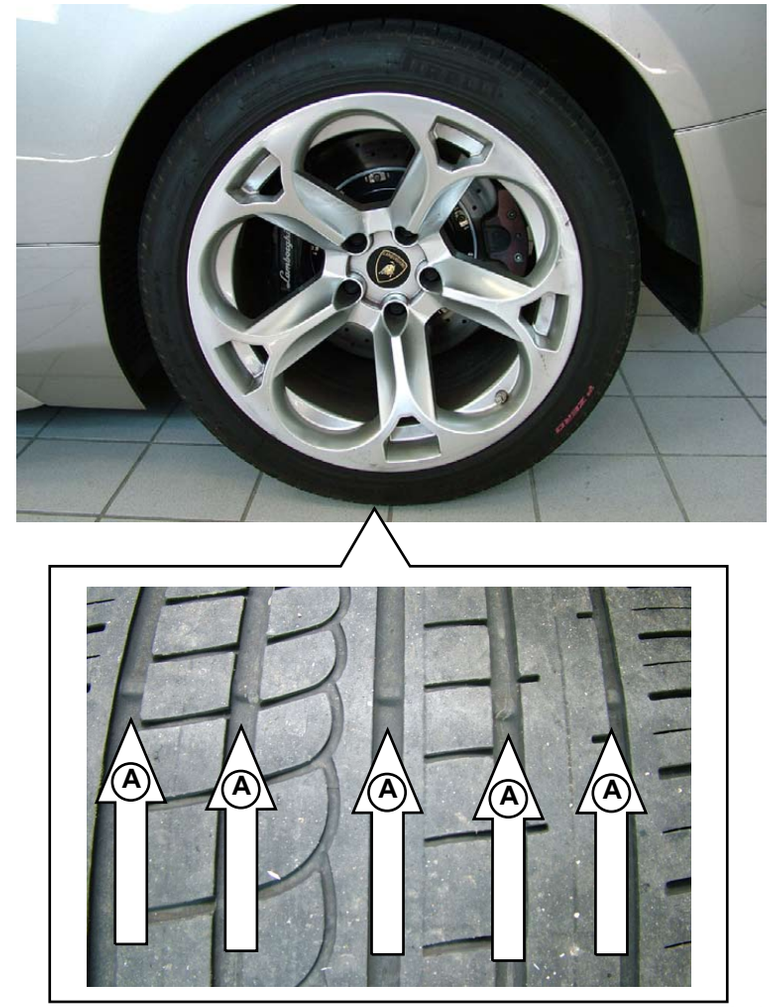

Fig.1

® Automobili Lamborghini S.p.A.
The information and procedures published below are strictly confidential and exclusively for the Lamborghini Dealer Network and Authorized Service Points. All copyrights are property of Automobili Lamborghini S.p.A based on copyright law. All of the PDF chapters in the WEB workshop manuals described below are based on information available at the time of publication. The company reserves the right to make updates and modifications. The following are prohibited: reprinting, reproduction, forwarding to unauthorized people and/or third parties, and translation, including partial, without written authorization from Automobili Lamborghini S.p.A.

This section explains how to disassemble:

A) Wheel rims
B) Tires
C) Tire pressure sensors

A) Disassembling the wheel rims

Preliminary operations

- Lift the vehicle on the car lift **(000000)**.

Disassembling the wheel rims

1. Disconnect the wheel from the hub by unscrewing the 5 screws (**A-Fig.1**) that secure it.

Be very careful with the wheel during disassembly to prevent denting or damaging the wheel rim.

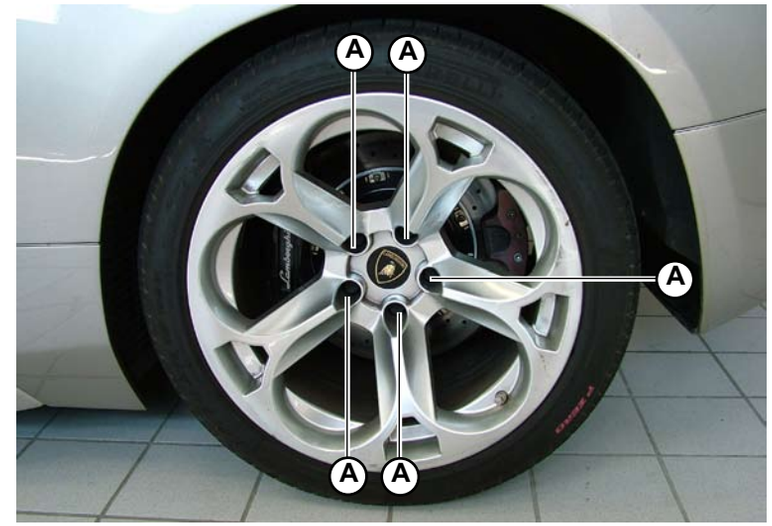

Fig.1

® Automobili Lamborghini S.p.A.
The information and procedures published below are strictly confidential and exclusively for the Lamborghini Dealer Network and Authorized Service Points. All copyrights are property of Automobili Lamborghini S.p.A based on copyright law. All of the PDF chapters in the WEB workshop manuals described below are based on information available at the time of publication. The company reserves the right to make updates and modifications. The following are prohibited: reprinting, reproduction, forwarding to unauthorized people and/or third parties, and translation, including partial, without written authorization from Automobili Lamborghini S.p.A.

B) Disassembling the tires without TPMS sensor

Preliminary operations

- Disassemble the car's wheel **(Point A)**.
- Deflate the tire.

Disassembling the tires

1. Position the wheel on the special tire changer.
2. To disassemble the tire from the rest of the wheel rim, follow the operations described in the tire changer's user and maintenance manual.

Note
Three types of tires can be installed on the car (**Fig.2**):
A. PZERO CORSA
B. PZERO PUNTO
C. PZERO ROSSO

Fig.2

® Automobili Lamborghini S.p.A.
The information and procedures published below are strictly confidential and exclusively for the Lamborghini Dealer Network and Authorized Service Points. All copyrights are property of Automobili Lamborghini S.p.A based on copyright law. All of the PDF chapters in the WEB workshop manuals described below are based on information available at the time of publication. The company reserves the right to make updates and modifications. The following are prohibited: reprinting, reproduction, forwarding to unauthorized people and/or third parties, and translation, including partial, without written authorization from Automobili Lamborghini S.p.A.

B) Disassembling the tires with TPMS sensor

Preliminary operations

- Disassemble the car's wheel **(Point A)**.
- Deflate the tire.

Disassembling the tires

1. Place the wheel next to the bead breaking arm (**A-Fig.3**), verifying that the TPMS sensor (**B-Fig.3**) is located on the side opposite the pressure area.

If the TPMS sensor's position is not observed during bead breaking, it could be irreparably damaged.

2. Rotate the wheel and repeat the bead breaking operation on the other side; again, make sure that the TPMS sensor (**B-Fig.4**) is positioned on the side opposite the bead breaking arm (**A-Fig.4**).

If the TPMS sensor's position is not observed during bead breaking, it could be irreparably damaged.

Fig.3

Fig.4

® Automobili Lamborghini S.p.A.
The information and procedures published below are strictly confidential and exclusively for the Lamborghini Dealer Network and Authorized Service Points. All copyrights are property of Automobili Lamborghini S.p.A based on copyright law. All of the PDF chapters in the WEB workshop manuals described below are based on information available at the time of publication. The company reserves the right to make updates and modifications. The following are prohibited: reprinting, reproduction, forwarding to unauthorized people and/or third parties, and translation, including partial, without written authorization from Automobili Lamborghini S.p.A.

3. Position the wheel on the tire changer, locking it into place using the column (**C-Fig.5**). Soften the tire to make disassembly easier by using the sliding support (**D-Fig.5**) and rotating the wheel (clockwise) several times.

Fig.5

4. Insert the lever (**E-Fig.6**) between the rim and the tire, careful that the TPMS sensor (**B-Fig.6**) is positioned approximately 10 cm away from where the lever is inserted.

STOP **If the TPMS sensor's position is not observed during removal of the upper part of the tire, it could be irreparably damaged.**

5. Press the lever downward (**Fig.6**) and activate the tire changer, rotating the wheel slightly more than 180°.

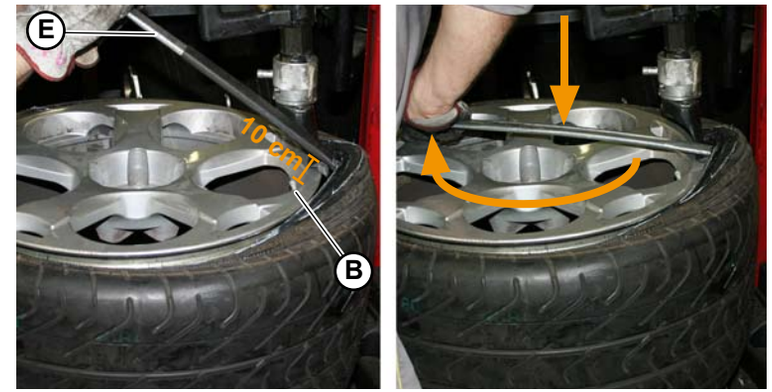

Fig.6

6. After this half rotation, the lever's pressure will release the upper part of the tire from the rim (**Fig.7**).

Fig.7

® Automobili Lamborghini S.p.A.
The information and procedures published below are strictly confidential and exclusively for the Lamborghini Dealer Network and Authorized Service Points. All copyrights are property of Automobili Lamborghini S.p.A based on copyright law. All of the PDF chapters in the WEB workshop manuals described below are based on information available at the time of publication. The company reserves the right to make updates and modifications. The following are prohibited: reprinting, reproduction, forwarding to unauthorized people and/or third parties, and translation, including partial, without written authorization from Automobili Lamborghini S.p.A.

7. Insert the lever (**E-Fig.8**) between the rim and the lower part of the tire, careful that the TPMS sensor (**B-Fig.8**) is positioned approximately 10 cm away from where the lever is inserted.

STOP **If the TPMS sensor's position is not observed during removal of the lower part of the tire, it could be irreparably damaged.**

5. Press the lever downward and activate the tire changer, rotating the wheel slightly more than 180° (**Fig.8**).

6. After this half rotation, the lever's pressure will completely release the tire from the rim.

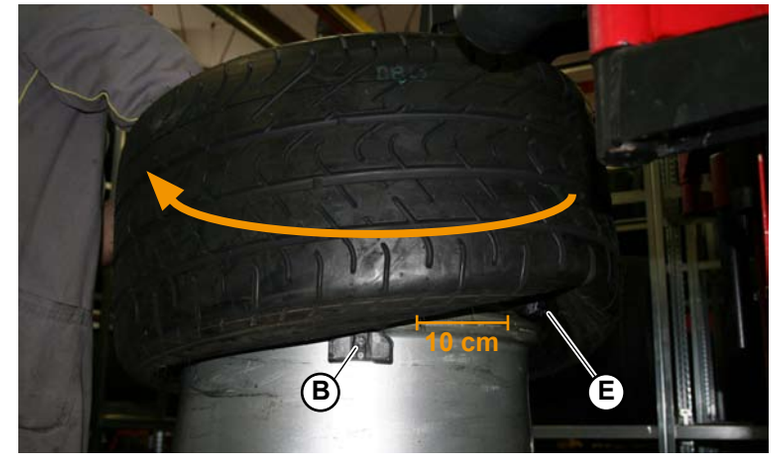

Fig.8

Note
Three types of tires can be installed on the car (**Fig.9**):
A. PZERO CORSA
B. PZERO PUNTO
C. PZERO ROSSO

Fig.9

® Automobili Lamborghini S.p.A.
The information and procedures published below are strictly confidential and exclusively for the Lamborghini Dealer Network and Authorized Service Points. All copyrights are property of Automobili Lamborghini S.p.A based on copyright law. All of the PDF chapters in the WEB workshop manuals described below are based on information available at the time of publication. The company reserves the right to make updates and modifications. The following are prohibited: reprinting, reproduction, forwarding to unauthorized people and/or third parties, and translation, including partial, without written authorization from Automobili Lamborghini S.p.A.

C) Disassembling the tire pressure sensors

Preliminary operations

- Disassemble the tire **(Point B)** of the sensor that must be replaced.

Disassembling the sensor

1. Insert the torsion bar (**A-Fig.9**) in the valve's hole (**B-Fig.9**).
2. Unscrew the TPMS bolt and remove the sensor (**C-Fig.9**) using the torque wrench.

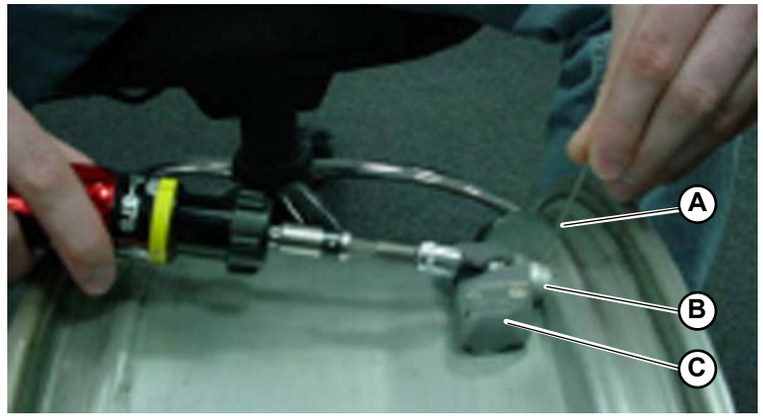

Fig.9

3. After removing the sensor, insert the torsion bar again (**A-Fig.10**) in the valve's hole (**B-Fig.10**).
4. Unscrew the valve (**B-Fig.10**) using the torque wrench.
5. Remove the nut, washer and the valve itself.

Fig.10

Note
If the valve, nut, washer and sensor are not damaged, they can be reused. The TPMS bolt, however, must be replaced every time.

® Automobili Lamborghini S.p.A.
The information and procedures published below are strictly confidential and exclusively for the Lamborghini Dealer Network and Authorized Service Points. All copyrights are property of Automobili Lamborghini S.p.A based on copyright law. All of the PDF chapters in the WEB workshop manuals described below are based on information available at the time of publication. The company reserves the right to make updates and modifications. The following are prohibited: reprinting, reproduction, forwarding to unauthorized people and/or third parties, and translation, including partial, without written authorization from Automobili Lamborghini S.p.A.

This section explains how to assemble:

A) Wheel rims
B) Tires
C) Tire pressure sensors

A) Assembling the wheel rims and tires

1. With the vehicle raised on the car lift **(000000),** secure the wheel to the hub by tightening the 5 mounting screws (**A-Fig.1**).

- **Be very careful with the wheel during assembly to prevent denting or damaging the wheel rim.**
- **At the time of wheel assembly, apply the tightening torque on the 5 screws (000800-21d).**

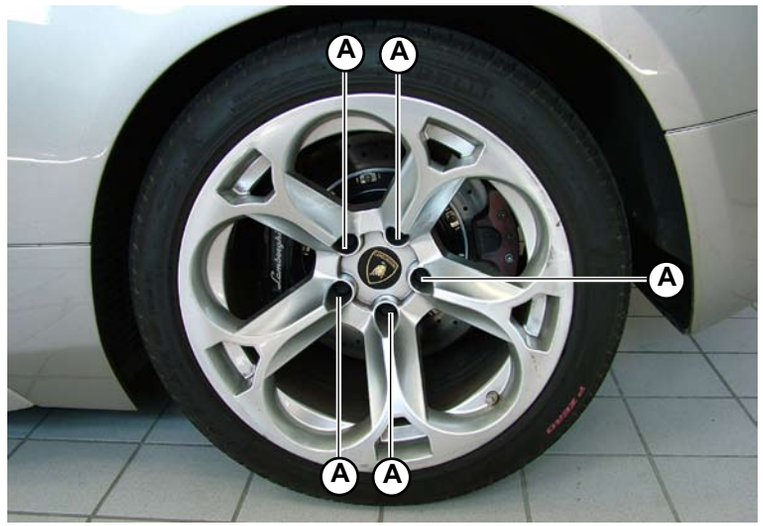

Fig.1

® Automobili Lamborghini S.p.A.
The information and procedures published below are strictly confidential and exclusively for the Lamborghini Dealer Network and Authorized Service Points. All copyrights are property of Automobili Lamborghini S.p.A based on copyright law. All of the PDF chapters in the WEB workshop manuals described below are based on information available at the time of publication. The company reserves the right to make updates and modifications. The following are prohibited: reprinting, reproduction, forwarding to unauthorized people and/or third parties, and translation, including partial, without written authorization from Automobili Lamborghini S.p.A.

B) Assembling the tires without TPMS sensor

1. Position the rim on the tire changer.
2. To assemble the tire onto the wheel rim, follow the operations described in the tire changer's user and maintenance manual.

- Inflate the tire.
- Assemble the car's wheel **(Point A)**.

Note
Three types of tires can be installed on the car (**Fig.2**):
A. PZERO CORSA
B. PZERO PUNTO
C. PZERO ROSSO

Fig.2

® Automobili Lamborghini S.p.A.
The information and procedures published below are strictly confidential and exclusively for the Lamborghini Dealer Network and Authorized Service Points. All copyrights are property of Automobili Lamborghini S.p.A based on copyright law. All of the PDF chapters in the WEB workshop manuals described below are based on information available at the time of publication. The company reserves the right to make updates and modifications. The following are prohibited: reprinting, reproduction, forwarding to unauthorized people and/or third parties, and translation, including partial, without written authorization from Automobili Lamborghini S.p.A.

B) Assembling the tires with TPMS sensor

1. Position the rim (**A-Fig.3**) on the tire changer.

Fig.3

Note
Apply grease/soap on the tire surfaces that will come into contact with the rim..

2. Insert the tire on the rim and secure the rim itself using the column (**B-Fig.4**). Check that the TPMS sensor (**C-Fig.4**) is located approximately 10 cm from the column.

STOP **If the TPMS sensor's position is not observed while the lower part of the tire is being inserted onto the rim, it could be irreparably damaged.**

3. Insert the lower part of the tire, placing the sliding support (**D-Fig.4**) on the tire and rotating the wheel slightly more than 180° (clockwise).

Fig.4

® Automobili Lamborghini S.p.A.
The information and procedures published below are strictly confidential and exclusively for the Lamborghini Dealer Network and Authorized Service Points. All copyrights are property of Automobili Lamborghini S.p.A based on copyright law. All of the PDF chapters in the WEB workshop manuals described below are based on information available at the time of publication. The company reserves the right to make updates and modifications. The following are prohibited: reprinting, reproduction, forwarding to unauthorized people and/or third parties, and translation, including partial, without written authorization from Automobili Lamborghini S.p.A.

4. After inserting the lower part of the tire, position the wheel so that the TPMS sensor (**C-Fig.5**) is located approximately 10 cm from the column (**B-Fig.5**).

If the TPMS sensor's position is not observed while the tire is being definitively inserted onto the rim, it could be irreparably damaged.

Fig.5

5. Insert the upper part of the tire, placing the sliding bearing (**D-Fig.6**) on the tire and rotating the wheel slightly more than 180° (clockwise).

6. After this half rotation, the pressure of the sliding support will correctly insert the tire onto the rim without damaging the TPMS sensor (**Fig.6**).

Fig.6

- Inflate the tire.
- Assemble the car's wheel **(Point A)**.

Note
Three types of tires can be installed on the car (**Fig.7**):
A. PZERO CORSA
B. PZERO PUNTO
C. PZERO ROSSO

Fig.7

® Automobili Lamborghini S.p.A.
The information and procedures published below are strictly confidential and exclusively for the Lamborghini Dealer Network and Authorized Service Points. All copyrights are property of Automobili Lamborghini S.p.A based on copyright law. All of the PDF chapters in the WEB workshop manuals described below are based on information available at the time of publication. The company reserves the right to make updates and modifications. The following are prohibited: reprinting, reproduction, forwarding to unauthorized people and/or third parties, and translation, including partial, without written authorization from Automobili Lamborghini S.p.A.

C) Assembling the tire pressure sensors

Note
Check that there are no burrs or corrosion on the hole (**A-Fig.8**) where the valve is inserted.

Fig.8

1. Insert the valve (**B-Fig.9**) with the head (which contains the threaded hole for connecting the TPMS sensor) facing toward the inside of the rim.

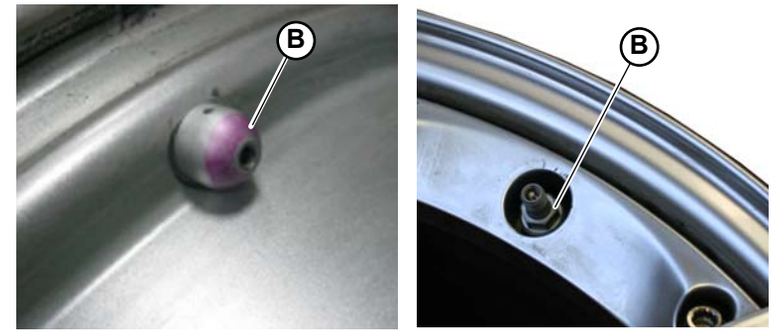

Fig.9

2. Insert the torsion bar (**C-Fig.10**) in the valve's hole (**B-Fig.10**).
   Then insert the washer and nut and secure the valve using the torque wrench.
   Valve attachment: tightening torque (000800-35d).

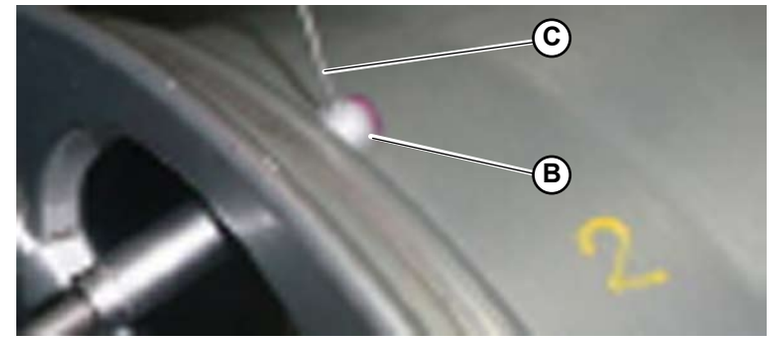

Fig.10

® Automobili Lamborghini S.p.A.
The information and procedures published below are strictly confidential and exclusively for the Lamborghini Dealer Network and Authorized Service Points. All copyrights are property of Automobili Lamborghini S.p.A based on copyright law. All of the PDF chapters in the WEB workshop manuals described below are based on information available at the time of publication. The company reserves the right to make updates and modifications. The following are prohibited: reprinting, reproduction, forwarding to unauthorized people and/or third parties, and translation, including partial, without written authorization from Automobili Lamborghini S.p.A.

3. Install the sensor (**D-Fig.11**), tightening the relevant TPMS bolt (**E-Fig.11**):
Insert the torsion bar (**C-Fig.12**) in the valve's hole (**B-Fig.12**), using the torque wrench.
Sensor attachment: tightening torque (000800-35d) with Loctite sealant.

STOP **Make sure that the TPMS sensor's two points of contact rest against the rim (Fig.12).**

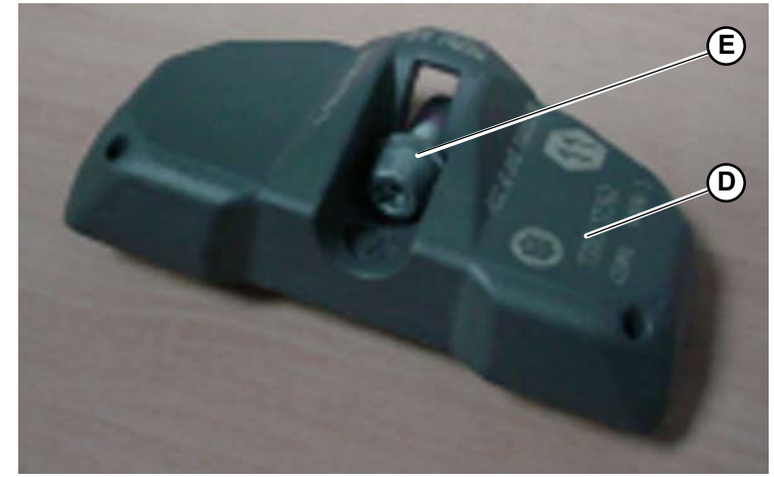

Fig.11

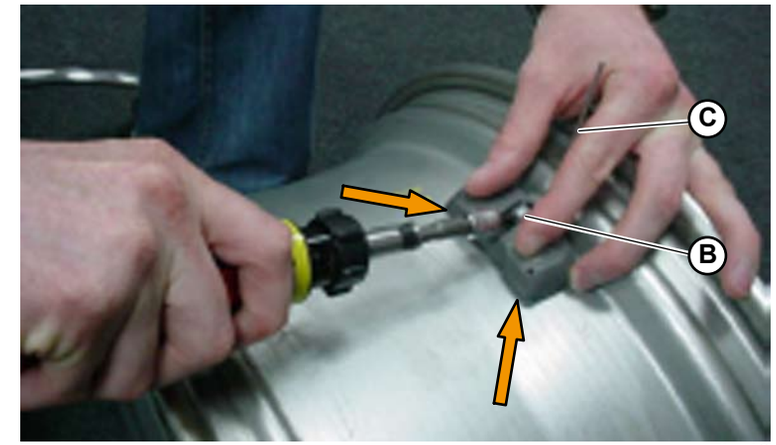

Fig.12

® Automobili Lamborghini S.p.A.
The information and procedures published below are strictly confidential and exclusively for the Lamborghini Dealer Network and Authorized Service Points. All copyrights are property of Automobili Lamborghini S.p.A based on copyright law. All of the PDF chapters in the WEB workshop manuals described below are based on information available at the time of publication. The company reserves the right to make updates and modifications. The following are prohibited: reprinting, reproduction, forwarding to unauthorized people and/or third parties, and translation, including partial, without written authorization from Automobili Lamborghini S.p.A.

Parking brake

The parking brake operates on the rear wheels.
The calipers acting on the wheel disks are controlled by two steel cables through two pulleys and a rocker arm that ensures a uniform force distribution.

Parking brake (Fig.1)	
A.	Hand brake lever
B.	Pulleys
C.	Tie rod adjuster
D.	Left-hand tie rod
E.	Pads
F.	Caliper
G.	Center tie rod

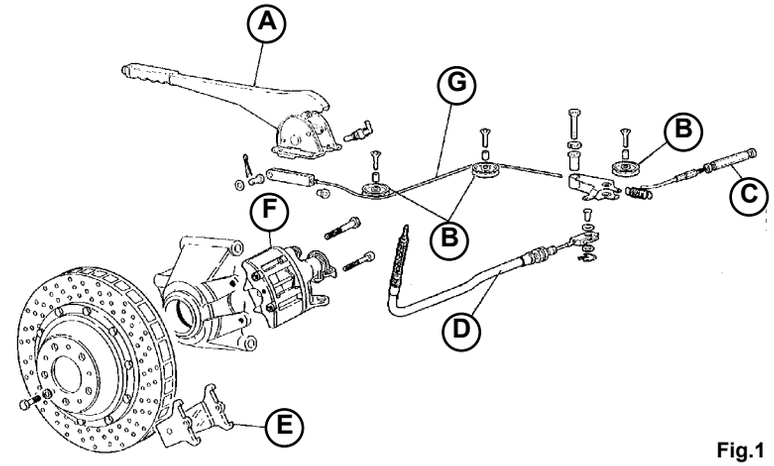

Fig.1

® Automobili Lamborghini S.p.A.
The information and procedures published below are strictly confidential and exclusively for the Lamborghini Dealer Network and Authorized Service Points. All copyrights are property of Automobili Lamborghini S.p.A based on copyright law. All of the PDF chapters in the WEB workshop manuals described below are based on information available at the time of publication. The company reserves the right to make updates and modifications. The following are prohibited: reprinting, reproduction, forwarding to unauthorized people and/or third parties, and translation, including partial, without written authorization from Automobili Lamborghini S.p.A.

Checking proper operation of the parking brake

Preliminary operations

- Lift the vehicle on the car lift **(000000)**.

Check the parking brake's operation using the lever in the passenger compartment:

- At the first click of the lever, the pads must not rub against the disk's surface; the wheels must therefore turn manually without effort.
- At the second click of the lever, the pads must start to touch the disks; the wheels must therefore turn manually with greater effort and more friction.
- At the third-fourth click of the lever, the pads completely press against the disks; the wheels are therefore completely braked.

If the lever does not work as described above, regulate the adjusters (**Fig.1**) of the tie rods to re-establish the lever's travel (**060202**).

Fig.1

Checking parking brake pad wear

Pad wear is checked using a special sensor that signals the condition of the pads.
The technical data regarding the pads can be found in chapter 060000.

If the pads must be replaced (061503), always check the disk's minimum thickness (061501).

® Automobili Lamborghini S.p.A.
The information and procedures published below are strictly confidential and exclusively for the Lamborghini Dealer Network and Authorized Service Points. All copyrights are property of Automobili Lamborghini S.p.A based on copyright law. All of the PDF chapters in the WEB workshop manuals described below are based on information available at the time of publication. The company reserves the right to make updates and modifications. The following are prohibited: reprinting, reproduction, forwarding to unauthorized people and/or third parties, and translation, including partial, without written authorization from Automobili Lamborghini S.p.A.

Parking brake adjustment

Preliminary operations

- Lift the vehicle on the car lift **(000000)**.

1. Operate on the right tie rod register (**Fig.1**) until the right wheel locks, then unscrew it by at least two turns.

Fig.1

STOP The wheel must turn freely with no rubbing between brake pads and disk.

2. Keeping the rocker arm rested, repeat the operation on the left brake tie rod.

3. Operate on the control lever in the passenger compartment:
   - At the first click of the lever, the pads must not rub against the disk's surface; the wheels must therefore turn manually without effort.
   - At the second click of the lever, the pads must start to touch the disks; the wheels must therefore turn manually with greater effort and more friction.
   - At the third-fourth click of the lever, the pads completely press against the disks; the wheels are therefore completely braked.

4. If not, regulate the adjusters of the tie rods to re-establish the lever's travel (indicated in point 3).

® Automobili Lamborghini S.p.A.
The information and procedures published below are strictly confidential and exclusively for the Lamborghini Dealer Network and Authorized Service Points. All copyrights are property of Automobili Lamborghini S.p.A based on copyright law. All of the PDF chapters in the WEB workshop manuals described below are based on information available at the time of publication. The company reserves the right to make updates and modifications. The following are prohibited: reprinting, reproduction, forwarding to unauthorized people and/or third parties, and translation, including partial, without written authorization from Automobili Lamborghini S.p.A.

The present section contains the following disassembly sequences:
A) Disassembling the parking brake on the wheel
B) Disassembling the parking brake lever

A) Disassembling the parking brake on the wheel

Preliminary operations:
- Put the car on a car lift **(000000)**;
- Remove the rear wheel **(060103)**;

Brake disassemble:
1. Disconnect the main wire from the wires preassembled on the calipers:
   - Cut the clamp that secures the wires onto the suspension arms.
   - Disconnect the left wire from the braking distribution and the right wire from the main wire.
2. Unscrew the two screws (**A-Fig.1**) securing the caliper (**B-Fig.1**).
3. Extract the disk's caliper, recovering the centering wheel cylinder and the pads (**C-Fig.1**).
4. Remove the gaskets.

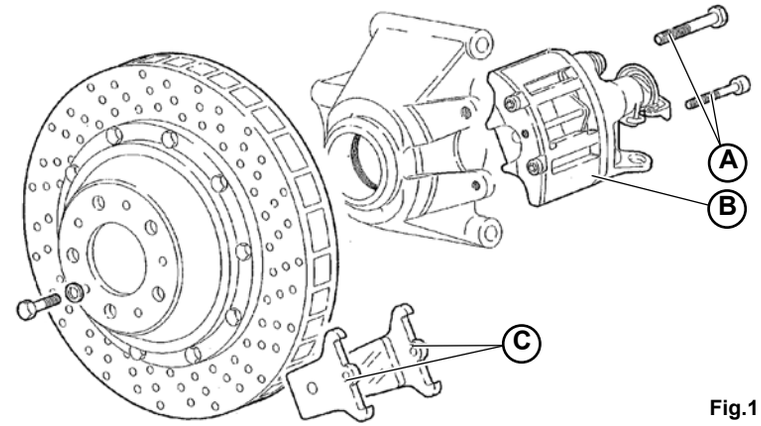

Fig.1

STOP **The procedure is the same for both rear wheels.**

® Automobili Lamborghini S.p.A.
The information and procedures published below are strictly confidential and exclusively for the Lamborghini Dealer Network and Authorized Service Points. All copyrights are property of Automobili Lamborghini S.p.A based on copyright law. All of the PDF chapters in the WEB workshop manuals described below are based on information available at the time of publication. The company reserves the right to make updates and modifications. The following are prohibited: reprinting, reproduction, forwarding to unauthorized people and/or third parties, and translation, including partial, without written authorization from Automobili Lamborghini S.p.A.

B) Disassembling the parking brake lever

Preliminary operations

- Remove the cover and boot from the hand brake **(086803)**;

Disassembling the lever

1. Unscrew the 4 screws (**A-Fig.2**) securing the hand brake lever (**B-Fig.2**).

2. Release the hand brake lever from the tie rod (**C-Fig.3**) below.

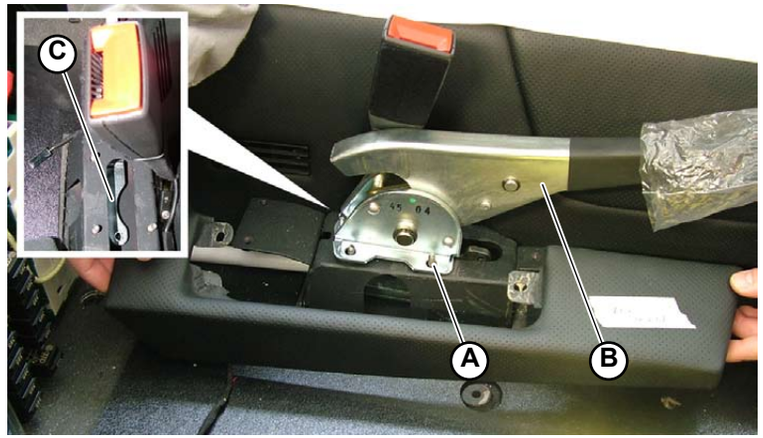

Fig.2

® Automobili Lamborghini S.p.A.
The information and procedures published below are strictly confidential and exclusively for the Lamborghini Dealer Network and Authorized Service Points. All copyrights are property of Automobili Lamborghini S.p.A based on copyright law. All of the PDF chapters in the WEB workshop manuals described below are based on information available at the time of publication. The company reserves the right to make updates and modifications. The following are prohibited: reprinting, reproduction, forwarding to unauthorized people and/or third parties, and translation, including partial, without written authorization from Automobili Lamborghini S.p.A.

The present section contains the following assembly sequences:
A) Assembling the parking brake on the wheel
B) Assembling the parking brake lever

A) Assembling the parking brake on the wheel

The procedure is the same for both rear wheels.

1. assemble the new gaskets and reset the backlash device. To zero-set the device, use the two holes (**A-Fig.1**) to re-tighten the piston (keep pressed) and set it to the “0” position.

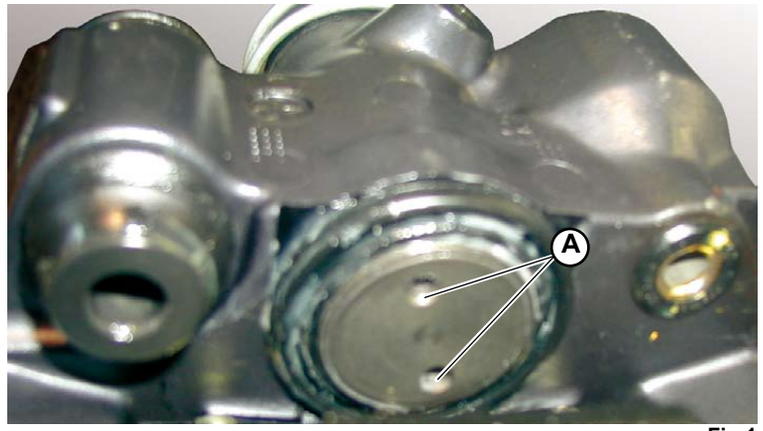

Fig.1

2. Insert the caliper (**B-Fig.2**) on the disk securing it with the two bolts (**C-Fig.2**), recovering the centering wheel cylinder and the pads (**D-Fig.2**).
   Bolt attachment; **tightening torque (000800-30a).**

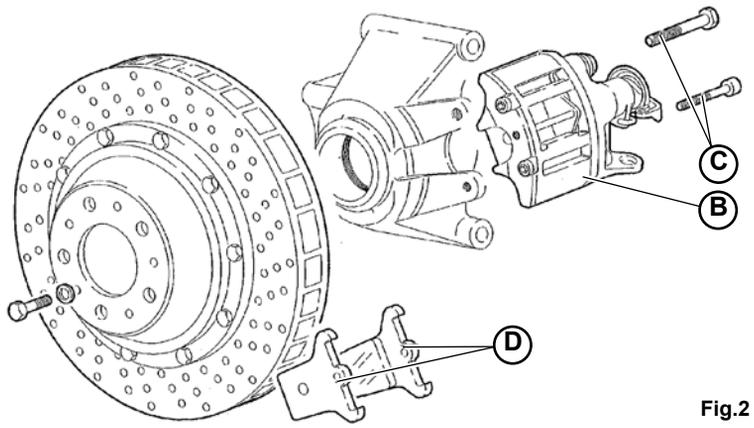

Fig.2

® Automobili Lamborghini S.p.A.
The information and procedures published below are strictly confidential and exclusively for the Lamborghini Dealer Network and Authorized Service Points. All copyrights are property of Automobili Lamborghini S.p.A based on copyright law. All of the PDF chapters in the WEB workshop manuals described below are based on information available at the time of publication. The company reserves the right to make updates and modifications. The following are prohibited: reprinting, reproduction, forwarding to unauthorized people and/or third parties, and translation, including partial, without written authorization from Automobili Lamborghini S.p.A.

3. With the two calipers assembled in their housings, preload them, or rather move the caliper's lever one stroke (**Fig.3**) to correctly engage the internal mechanism (automatic backlash device).
   This ensures proper positioning of the caliper's internal linkage and guarantees proportional movement of the pistons according to the movement of the caliper's lever, even at the initial stroke. If this does not happen correctly, the load between the left caliper and the right caliper could be unbalanced, causing the overall system to perform poorly.

4. Connect the main wire to the wires preassembled on the calipers:
   - The left wire must be connected to the braking distribution and the right wire (using an adjuster screw) to the main wire.
   - Then secure the wires to the suspension arms using a clamp, leaving a little flexibility.

5. Grease the pins of the caliper pulleys using ADHESIVE GREASE SPRAY.

Fig.3

- Assemble the rear wheel **(060105)**.

B) Assembling the parking brake lever

1. Connect the parking brake lever (**A-Fig.2**) to the tie rod (**B-Fig.3**) below the lever.

2. To secure the parking brake lever, use the 4 screws (**C-Fig.2**) located below the lever.

- Assemble the hand brake cover and boot **(086805)**.

Fig.4

® Automobili Lamborghini S.p.A.
The information and procedures published below are strictly confidential and exclusively for the Lamborghini Dealer Network and Authorized Service Points. All copyrights are property of Automobili Lamborghini S.p.A based on copyright law. All of the PDF chapters in the WEB workshop manuals described below are based on information available at the time of publication. The company reserves the right to make updates and modifications. The following are prohibited: reprinting, reproduction, forwarding to unauthorized people and/or third parties, and translation, including partial, without written authorization from Automobili Lamborghini S.p.A.

Running in the parking brake pads

Running-in is especially important for the version with a Carbon Ceramic braking system.

Step 1:

- Brake several times starting at a speed of 50 km/h, pulling the parking brake until the car stops (position the gear in neutral).
- Repeat the operation 4-5 times, waiting 4-5 minutes between each operation.

STOP **After carrying out the series of brakings, check that the parking brake conditions are still good (060201); if not, adjust the wire again (060202).**

Step 2: Test on cement ramp

- Position the car at the center of the ramp and pull the parking brake lever to the seventh/eighth click: the car must remain stopped.

STOP **If the car remains stopped at a lower number of clicks, the disk might not be completely released during driving with consequent damage to the pads (Carbon Ceramic version).**

Step 3: Checking the load

- Pull the lever in the passenger compartment with a NOVATECH dynamometer between your hand and the lever (positioned at the middle of the handgrip).
- Check that the maximum force exerted on the lever does not exceed 400 N at the tenth click.

STOP **If the maximum load is reached before the tenth click, repeat the preloading procedure (060205) and the adjustment procedure (060202) (Standard-Carbon Ceramic version).**

i If necessary, ballast the car up to 2,000 kg of the maximum laden mass as required by type-approval regulations.

® Automobili Lamborghini S.p.A.
The information and procedures published below are strictly confidential and exclusively for the Lamborghini Dealer Network and Authorized Service Points. All copyrights are property of Automobili Lamborghini S.p.A based on copyright law. All of the PDF chapters in the WEB workshop manuals described below are based on information available at the time of publication. The company reserves the right to make updates and modifications. The following are prohibited: reprinting, reproduction, forwarding to unauthorized people and/or third parties, and translation, including partial, without written authorization from Automobili Lamborghini S.p.A.

Check the brake system, pipes, calipers and connections

Preliminary operations

- Disassemble the tires **(060103)**.

Check regularly:

- **tightening torques (000800)**.
- **the integrity of the brake system pipes and connections.**
- **the calipers for wear. If necessary, replace (060703).**
- **ensure the brake system functions correctly.**

® Automobili Lamborghini S.p.A.
The information and procedures published below are strictly confidential and exclusively for the Lamborghini Dealer Network and Authorized Service Points. All copyrights are property of Automobili Lamborghini S.p.A based on copyright law. All of the PDF chapters in the WEB workshop manuals described below are based on information available at the time of publication. The company reserves the right to make updates and modifications. The following are prohibited: reprinting, reproduction, forwarding to unauthorized people and/or third parties, and translation, including partial, without written authorization from Automobili Lamborghini S.p.A.

Brake caliper disassembly

Preliminary operations

- Disassemble the wheel **(060103)**.

Caliper disassembly

1. Disconnect the connector for the pads (**A-Fig.1**).
2. Disconnect the ABS connector (**B-Fig.1**).
3. Disconnect the brake fluid pipe (**C-Fig.1**) carefully collecting the brake fluid that leaks out in an oil pan.
4. Unscrew the two screws (**D-Fig.1**) that secure the brake calipers.

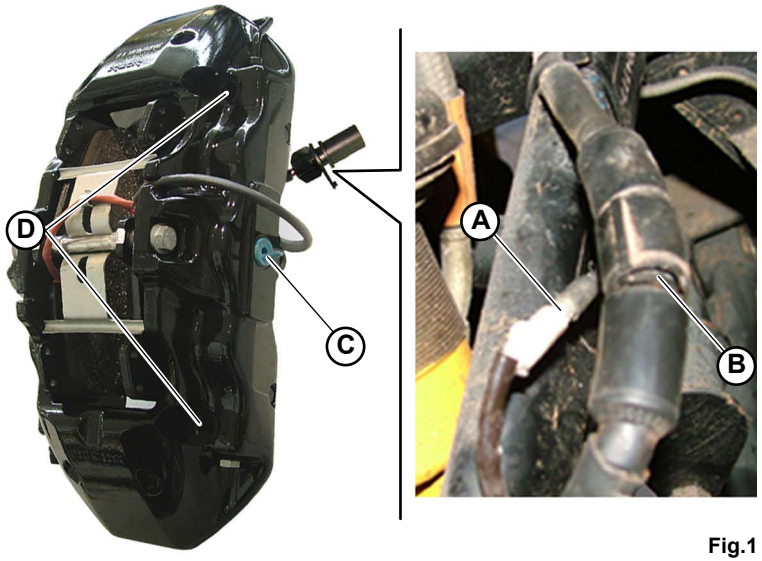

Fig.1

The sequence for disassembling the brake calipers is the same for both the front and rear wheels.

Do not bump or damage the carbon ceramic brake disks in any way when handling them.

® Automobili Lamborghini S.p.A.
The information and procedures published below are strictly confidential and exclusively for the Lamborghini Dealer Network and Authorized Service Points. All copyrights are property of Automobili Lamborghini S.p.A based on copyright law. All of the PDF chapters in the WEB workshop manuals described below are based on information available at the time of publication. The company reserves the right to make updates and modifications. The following are prohibited: reprinting, reproduction, forwarding to unauthorized people and/or third parties, and translation, including partial, without written authorization from Automobili Lamborghini S.p.A.

Brake caliper assembly

1. Deposit a drop of medium strength thread sealant on each of the two screws that secure the brake caliper.
2. Secure the brake caliper to the disk using the two screws (**A-Fig.1**).
   Screw attachment; **tightening torque (000800-30b).**
3. Connect the brake oil pipe (**B-Fig.1**).
4. Connect the ABS connector (**C-Fig.1**).
5. Connect the connector for the pads (**D-Fig.1**).

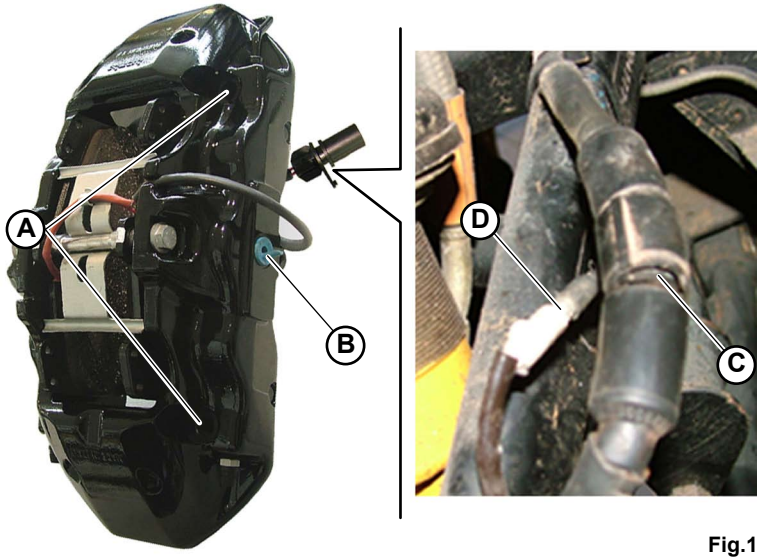

Fig.1

- Bleed the brakes **(061106)**.
- Reassemble the wheel **(060105)**.

The sequence for assembling the brake calipers is the same for both the front and rear wheels.

STOP **Do not bump or damage the carbon ceramic brake disks in any way when handling them.**

® Automobili Lamborghini S.p.A.
The information and procedures published below are strictly confidential and exclusively for the Lamborghini Dealer Network and Authorized Service Points. All copyrights are property of Automobili Lamborghini S.p.A based on copyright law. All of the PDF chapters in the WEB workshop manuals described below are based on information available at the time of publication. The company reserves the right to make updates and modifications. The following are prohibited: reprinting, reproduction, forwarding to unauthorized people and/or third parties, and translation, including partial, without written authorization from Automobili Lamborghini S.p.A.

Checking the fluid in the brake circuit

Preliminary operations

- Open the front bonnet.
- Unscrew the relative screws (**A-Fig.1**) to disassemble the safety panel.

Checking the fluid

1. Visually check there is fluid inside the brake circuit fluid tank (**B-Fig.1**).

The fluid level must always be between the MIN and MAX marks. If necessary, top up the fluid in the tank (061108).

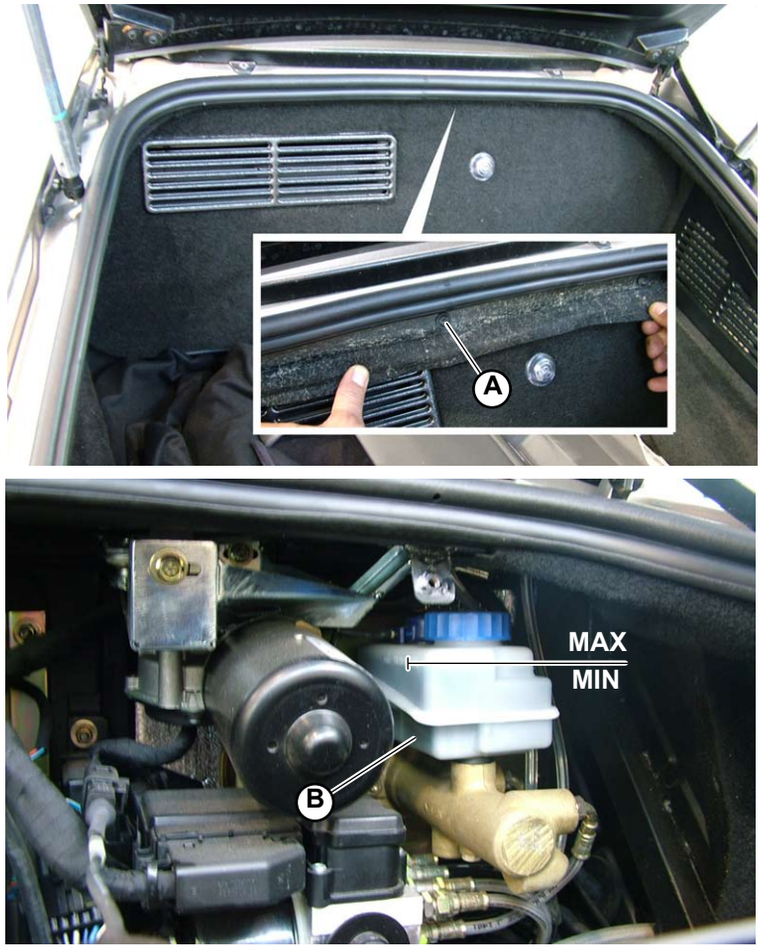

Fig.1

® Automobili Lamborghini S.p.A.
The information and procedures published below are strictly confidential and exclusively for the Lamborghini Dealer Network and Authorized Service Points. All copyrights are property of Automobili Lamborghini S.p.A based on copyright law. All of the PDF chapters in the WEB workshop manuals described below are based on information available at the time of publication. The company reserves the right to make updates and modifications. The following are prohibited: reprinting, reproduction, forwarding to unauthorized people and/or third parties, and translation, including partial, without written authorization from Automobili Lamborghini S.p.A.

Disassembling the vacuum tank.

STOP **The car features two vacuum tanks: one on the right and one on the left.**
Left side: brake vacuum tank.
Right side: accessories vacuum tank.

Preliminary operations

- Disassemble the engine hood support piston **(082703)**.
- Remove the silencer safety grid **(025103)**.
- Disassemble the side carbon bulkhead **(081303)**.
- Disassemble the air filter **(081303)**.

Disassembling the tank.

1. Disconnect the pipe connected to the vacuum tank.
2. Unscrew the 2 screws (**A-Fig.1**) securing the vacuum tank (**B-Fig.1**) to the chassis.
3. Remove the vacuum tank.

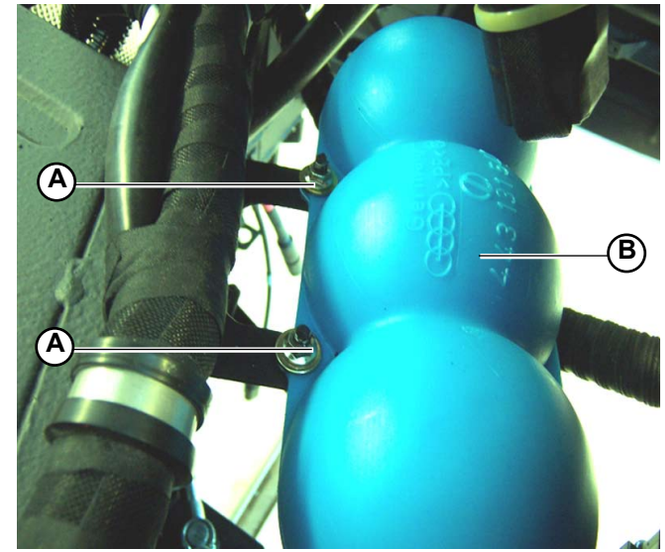

Fig.1

® Automobili Lamborghini S.p.A.
The information and procedures published below are strictly confidential and exclusively for the Lamborghini Dealer Network and Authorized Service Points. All copyrights are property of Automobili Lamborghini S.p.A based on copyright law. All of the PDF chapters in the WEB workshop manuals described below are based on information available at the time of publication. The company reserves the right to make updates and modifications. The following are prohibited: reprinting, reproduction, forwarding to unauthorized people and/or third parties, and translation, including partial, without written authorization from Automobili Lamborghini S.p.A.

Assembling the vacuum tank

The car features two vacuum tanks: one on the right and one on the left.
Left side: brake vacuum tank
Right side: accessories vacuum tank

1. Secure the vacuum tank (**A-Fig.1**) to the vehicle chassis using the 2 screws (**B-Fig.1**).

2. Connect the pipe to the vacuum tank.

- Assemble the air filter **(081305)**.
- Assemble the side carbon bulkhead **(081305)**.
- Assemble the silencer safety grid **(025105)**.
- Assemble the engine hood support piston **(082705)**.

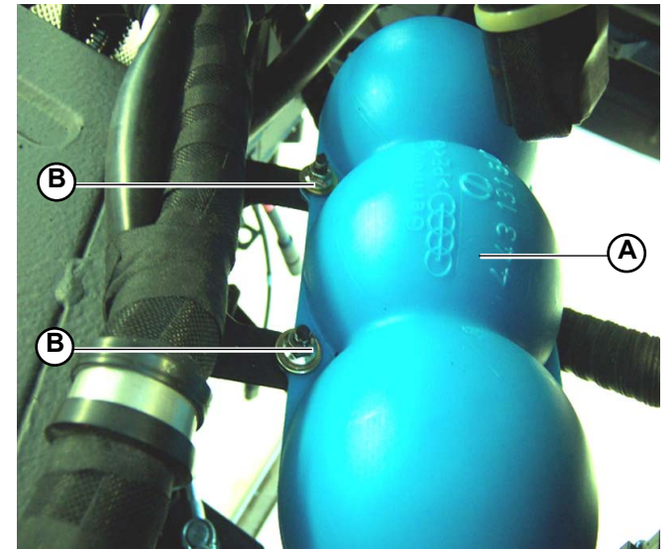

Fig.1

® Automobili Lamborghini S.p.A.
The information and procedures published below are strictly confidential and exclusively for the Lamborghini Dealer Network and Authorized Service Points. All copyrights are property of Automobili Lamborghini S.p.A based on copyright law. All of the PDF chapters in the WEB workshop manuals described below are based on information available at the time of publication. The company reserves the right to make updates and modifications. The following are prohibited: reprinting, reproduction, forwarding to unauthorized people and/or third parties, and translation, including partial, without written authorization from Automobili Lamborghini S.p.A.

Fluid in the brake circuit bleeding

The level of the brake fluid must always be between the notches indicating MAX and MIN on the tank.
The tank is provided with two floats that indicate when the level is under the minimum for both front and rear circuits.
To reach the brake pump tank, remove the upholstery panel of the front compartment. When topping up use only the prescribed fluid and introduce it with a perfectly clean dry syringe. Ensure that the fluid is uncontaminated and comes from a sealed can.

STOP **If the low level warning light turns on, always check the actual pad wear before replacing them or topping brake fluid up, if necessary.**

- Start bleeding from the front brake calipers
- Bleed the outer screws, and then the inner screws of the right and left brake calipers.
- Repeat the same operations for the rear brake calipers.

To top up the brake fluid, always use fluid coming from sealed cans.

STOP **After bleeding, the brake pedal should not be flexible.**

STOP **Beware: brake fluid can remove Body Paint.**

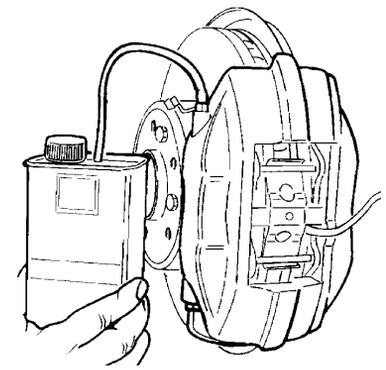

Fig.1

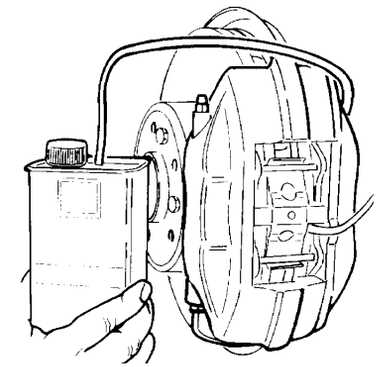

Fig.2

® Automobili Lamborghini S.p.A.
The information and procedures published below are strictly confidential and exclusively for the Lamborghini Dealer Network and Authorized Service Points. All copyrights are property of Automobili Lamborghini S.p.A based on copyright law. All of the PDF chapters in the WEB workshop manuals described below are based on information available at the time of publication. The company reserves the right to make updates and modifications. The following are prohibited: reprinting, reproduction, forwarding to unauthorized people and/or third parties, and translation, including partial, without written authorization from Automobili Lamborghini S.p.A.

Replacing the fluid in the brake circuit

Preliminary operations

- Open the front bonnet.
- Unscrew the relative screws (**A-Fig.1**) to disassemble the safety panel.

Replacing the fluid

Solution 1

- Use a pneumatic device that pressurises the circuit and keeps it constantly full.

STOP **Until brake fluid begins to exit, continue to bleed the system.**
The fluid replacement procedure must be carried out on every brake caliper (bleed the interior as well as the exterior of the caliper).

Solution 2

- Use a syringe to remove the fluid inside the reservoir (**B-Fig.1**). Replace with new brake fluid.
- Manually bleed each wheel **(061106)** until clean brake fluid starts to exit.

STOP **The fluid replacement procedure must be carried out on every brake caliper (bleed the interior as well as the exterior of the caliper).**

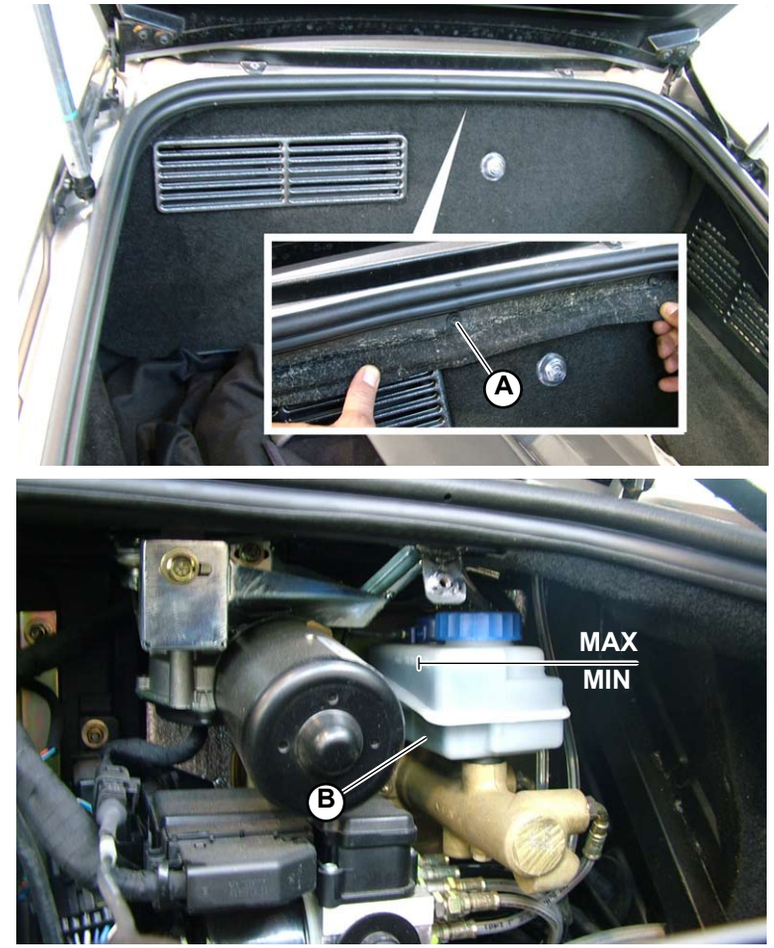

Fig.1

® Automobili Lamborghini S.p.A.
The information and procedures published below are strictly confidential and exclusively for the Lamborghini Dealer Network and Authorized Service Points. All copyrights are property of Automobili Lamborghini S.p.A based on copyright law. All of the PDF chapters in the WEB workshop manuals described below are based on information available at the time of publication. The company reserves the right to make updates and modifications. The following are prohibited: reprinting, reproduction, forwarding to unauthorized people and/or third parties, and translation, including partial, without written authorization from Automobili Lamborghini S.p.A.

Filling and topping up the brake circuit fluid

Preliminary operations

- Open the front bonnet.
- Unscrew the relative screws (**A-Fig.1**) to disassemble the safety panel.

Filling and topping up the fluid

- Remove the cap on the brake fluid reservoir (**B-Fig.1**).
- Top up the fluid level (**000300**).

The level of the brake circuit fluid must always be between the MIN and MAX marks.

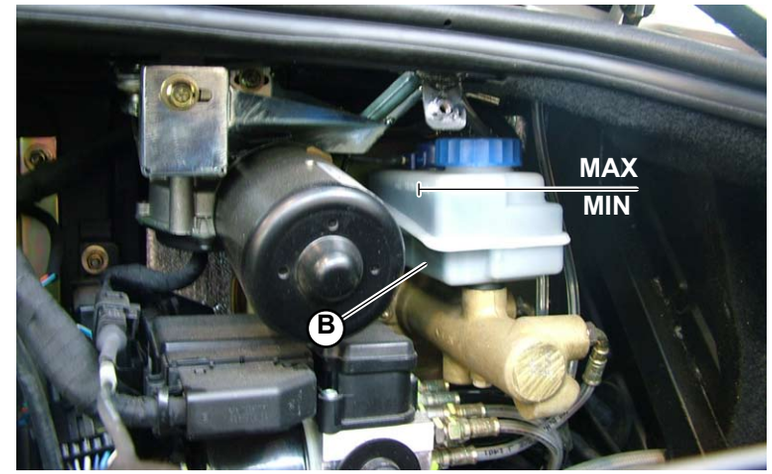

Fig.1

® Automobili Lamborghini S.p.A.
The information and procedures published below are strictly confidential and exclusively for the Lamborghini Dealer Network and Authorized Service Points. All copyrights are property of Automobili Lamborghini S.p.A based on copyright law. All of the PDF chapters in the WEB workshop manuals described below are based on information available at the time of publication. The company reserves the right to make updates and modifications. The following are prohibited: reprinting, reproduction, forwarding to unauthorized people and/or third parties, and translation, including partial, without written authorization from Automobili Lamborghini S.p.A.

Brake booster disassembly

Preliminary operations

- Disassemble the bulkhead inside the luggage compartment under the rug.
- Empty the brake fluid reservoir.
- Remove the connection from the brake pump.
- Disconnect the vacuum pipe.
- Move the ABS control unit.

Brake booster disassembly

1. Unscrew the brake booster's two stay-bolts (**A-Fig.1**).
2. Unscrew the two screws, equipped with a mounting pin (**B-Fig.2**), that secure the brake booster to the pedal cluster.
3. Extract the brake booster.

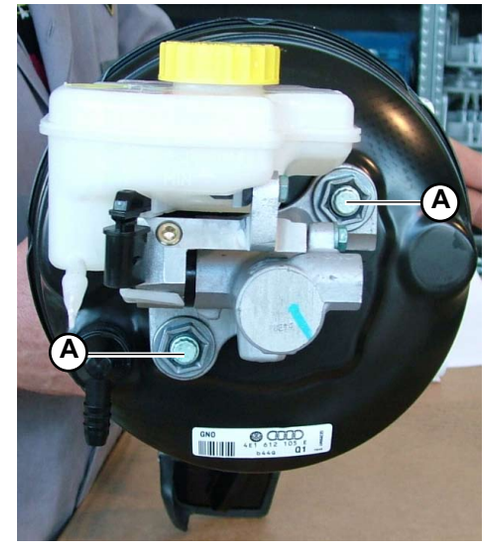

Fig.1

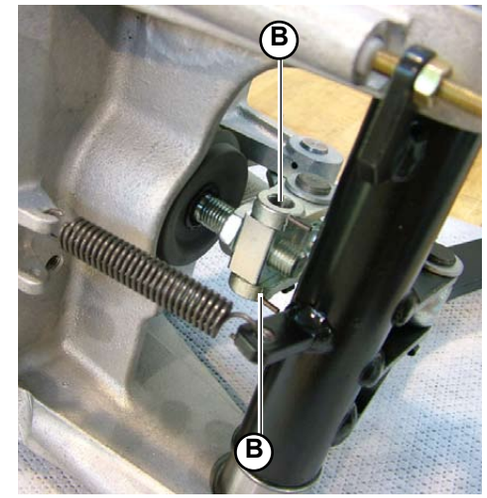

Fig.2

® Automobili Lamborghini S.p.A.
The information and procedures published below are strictly confidential and exclusively for the Lamborghini Dealer Network and Authorized Service Points. All copyrights are property of Automobili Lamborghini S.p.A based on copyright law. All of the PDF chapters in the WEB workshop manuals described below are based on information available at the time of publication. The company reserves the right to make updates and modifications. The following are prohibited: reprinting, reproduction, forwarding to unauthorized people and/or third parties, and translation, including partial, without written authorization from Automobili Lamborghini S.p.A.

Brake booster assembly

1. Secure the brake booster to the pedal cluster using the two screws with mounting pin (**A-Fig.1**).
2. Tighten the brake booster's two stay-bolts (**B-Fig.2**).
   Screw attachment; **tightening torque (000800-23a).**

- Assemble the ABS control unit inside the special bracket.
- Connect the vacuum pipe.
- Create the connection to the brake pump.
- Fill the brake fluid reservoir.
- Reassemble the bulkhead inside the luggage compartment under the rug.

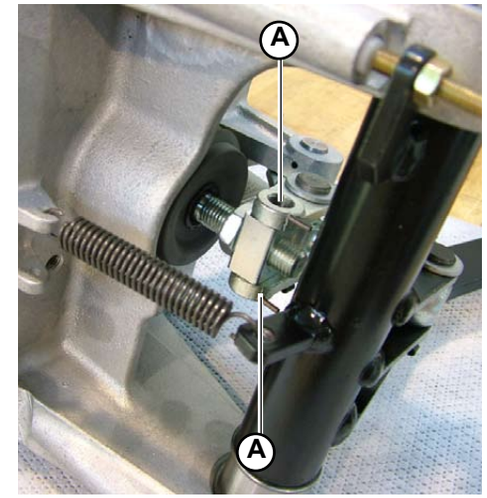

Fig.1

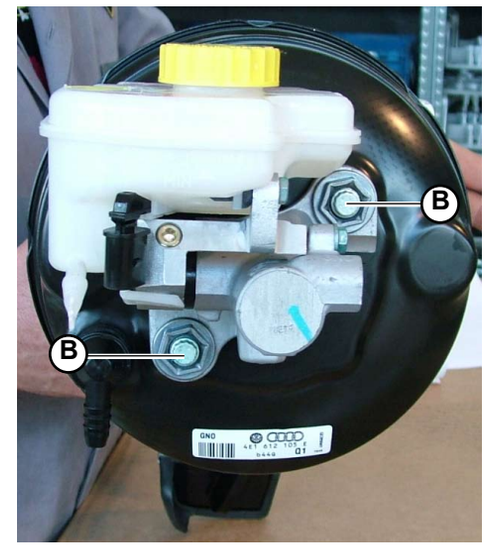

Fig.2

® Automobili Lamborghini S.p.A.
The information and procedures published below are strictly confidential and exclusively for the Lamborghini Dealer Network and Authorized Service Points. All copyrights are property of Automobili Lamborghini S.p.A based on copyright law. All of the PDF chapters in the WEB workshop manuals described below are based on information available at the time of publication. The company reserves the right to make updates and modifications. The following are prohibited: reprinting, reproduction, forwarding to unauthorized people and/or third parties, and translation, including partial, without written authorization from Automobili Lamborghini S.p.A.

ABS

The ABS system prevents wheel lock-up during braking and therefore maintains optimum steering and vehicle control even on roads with low grip.

The purpose of the ABS system is to modulate the pressure of the braking system in order to prevent wheel lock-up even during braking on roads with low grip.
For optimum use of the system, continuous pressure must be applied to the pedal.

Activation of the ABS varies according to the adherence conditions between the road surface and the tires. To notice the pulsing of the pedal on a dry surface, greater pressure must be applied compared to when on slippery road surfaces. System activation, in fact, will be immediate if an attempt is made to stop the vehicle on snow or ice. Under critical conditions the ABS helps prevent wheel lock-up and maintains control of steering.
The ABS, in certain low grip conditions (ice), might increase the distance necessary for stopping the vehicle but permits maintaining control of the latter.
During braking without the ABS, the system electronically controls (DRP) braking distribution between the front and rear.

CAUTION!

Remember that if your vehicle follows another one too closely, it will not be possible to slow down quickly enough to prevent impact, regardless of tire grip on the road surface.
Therefore, always maintain the necessary safe distance from the vehicle in front.

The ABS system is supplementary to the basic braking system. Any ABS system failure, although not leading to a loss in braking, can modify the vehicle's normal behavior when driving at top speed.

When the key is turned to "ON", the ABS control unit carries out an internal test of the system. The warning light remains on for approximately two seconds after the others turn off. Then, if no malfunctions were identified, it will turn off.

Normally an intermittent acoustic signal comes on together with the light which, except for the initial start test, must be interpreted as a malfunction that must be considered. If the warning light comes on during driving, a malfunction was found and the ABS system is not activated. The vehicle must therefore be stopped, the engine must be turned off and, after waiting one minute, the key must be turned to "ON" again. If the malfunction is temporary, the warning light will turn off after carrying out the routine initial test.

® Automobili Lamborghini S.p.A.
The information and procedures published below are strictly confidential and exclusively for the Lamborghini Dealer Network and Authorized Service Points. All copyrights are property of Automobili Lamborghini S.p.A based on copyright law. All of the PDF chapters in the WEB workshop manuals described below are based on information available at the time of publication. The company reserves the right to make updates and modifications. The following are prohibited: reprinting, reproduction, forwarding to unauthorized people and/or third parties, and translation, including partial, without written authorization from Automobili Lamborghini S.p.A.

Brake switch adjustment

It is located inside the passenger compartment, where it is mounted on to the pedal cluster on a bracket.
The adjustment of this component is critical, ensure that the switch is open when the pedal is at rest position. Simply check whether or not the brake lights are on.

If the switch is incorrectly adjusted or damaged, the control unit acknowledges the situation by generating the relative error message: stuck or inoperative brake switch.

Brake switch (Fig.1)	
A.	Brake/ABS switch
B.	Adjustment

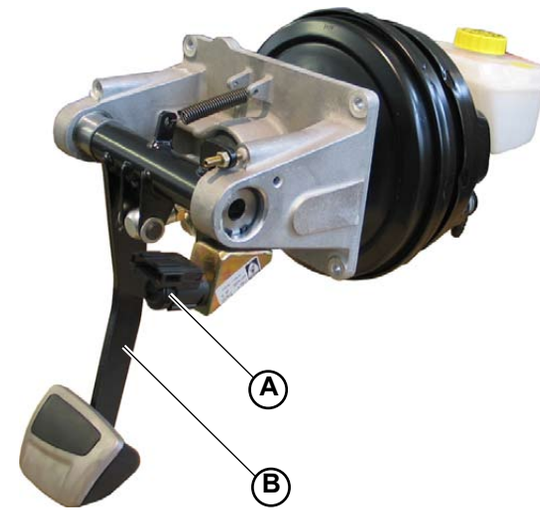

Fig.1

Checking procedure

See chapter (080201) for pedal adjustment and (092702) for switch adjustment

If the adjustment is not carried out properly, the e-gear system does not work.

® Automobili Lamborghini S.p.A.
The information and procedures published below are strictly confidential and exclusively for the Lamborghini Dealer Network and Authorized Service Points. All copyrights are property of Automobili Lamborghini S.p.A based on copyright law. All of the PDF chapters in the WEB workshop manuals described below are based on information available at the time of publication. The company reserves the right to make updates and modifications. The following are prohibited: reprinting, reproduction, forwarding to unauthorized people and/or third parties, and translation, including partial, without written authorization from Automobili Lamborghini S.p.A.

ABS control disassembly

The electro-hydraulic control unit is located inside the bulkhead of the front luggage compartment. Disassemble the bulkhead **(080603)** and the entire electro-hydraulic unit which is located under the brake pump.

ABS control unit component parts (Fig.1)	
A.	ABS Control Unit
B.	Connector
C.	Hoses
D.	Mounts

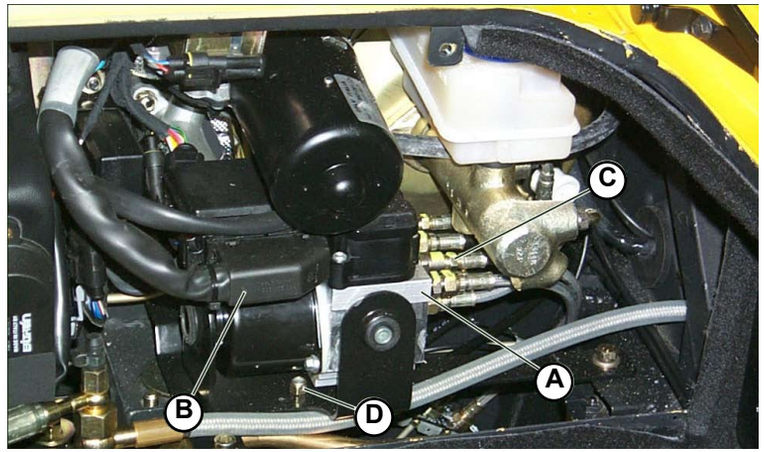

Fig.1

Before disconnecting the connector from the control unit make sure the battery isolator is to OFF position, then slide the safety fastener towards the left.
Do not attempt to remove the connector when the fastener is still fitted or damage to internal contacts will occur.
Unscrew the hoses from the unions on the hydraulic unit. Make a note of the hose positions to facilitate re-assembly.
Unscrew the three fixing screws securing the ABS control unit to the chassis. Remove the assembly with its support from the vehicle.
To disassemble the support, unscrew the two pins at the sides of the control unit.

® Automobili Lamborghini S.p.A.
The information and procedures published below are strictly confidential and exclusively for the Lamborghini Dealer Network and Authorized Service Points. All copyrights are property of Automobili Lamborghini S.p.A based on copyright law. All of the PDF chapters in the WEB workshop manuals described below are based on information available at the time of publication. The company reserves the right to make updates and modifications. The following are prohibited: reprinting, reproduction, forwarding to unauthorized people and/or third parties, and translation, including partial, without written authorization from Automobili Lamborghini S.p.A.

Do not attempt to separate the electronic and hydraulic parts of the control unit.
During these procedures take measures to keep dirt and debris out of the open ends of disconnected tubes. Tube connections should be plugged for protection.
When reassembling the control unit observe the correct connection sequence of the hoses; refer to the markings stamped on the hydraulic unit.

If it is necessary to replace the ABS system electro-hydraulic unit, to assist tracing the required part use the number (**A-Fig.2**) stamped on the hydraulic unit and on the electronic unit plate (**B-Fig.2**).

XX:	two characters indicating ABS type
xxxxxxxx :	eight characters indicating the serial number
XXX:	three free character spaces
xxxxxxxxx:	nine characters for the serial number
xxxxx:	five free character spaces

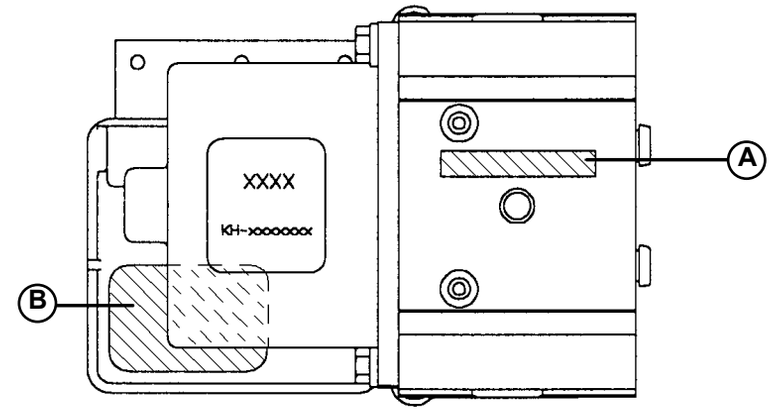

Fig.2

® Automobili Lamborghini S.p.A.
The information and procedures published below are strictly confidential and exclusively for the Lamborghini Dealer Network and Authorized Service Points. All copyrights are property of Automobili Lamborghini S.p.A based on copyright law. All of the PDF chapters in the WEB workshop manuals described below are based on information available at the time of publication. The company reserves the right to make updates and modifications. The following are prohibited: reprinting, reproduction, forwarding to unauthorized people and/or third parties, and translation, including partial, without written authorization from Automobili Lamborghini S.p.A.

ABS control assembly

STOP When reassembling the control unit observe the correct connection sequence of the hoses; refer to the markings stamped on the hydraulic unit.

ABS control unit details (Fig.1)	
A.	ABS Control Unit
B.	Connector
C.	Hoses
D.	Mounts

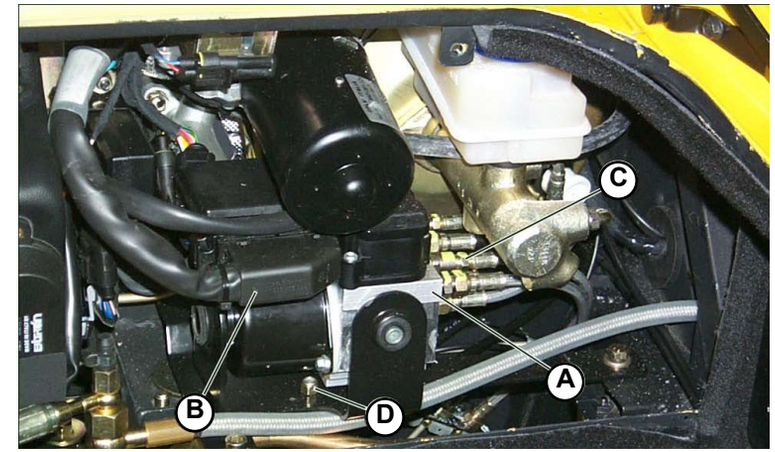

Fig.1

To assemble the support, screw the two pins at the sides of the control unit.
Fit the assembly with its support on the vehicle and screw the three fixing screws securing the ABS control unit to the chassis.
Screw the union hoses on the hydraulic unit.
Before connecting the connector on the control unit make sure the battery isolator is to OFF position, then slide the safety fastener towards the right.

Install the bulkhead inside the engine compartment **(080605)**.

® Automobili Lamborghini S.p.A.
The information and procedures published below are strictly confidential and exclusively for the Lamborghini Dealer Network and Authorized Service Points. All copyrights are property of Automobili Lamborghini S.p.A based on copyright law. All of the PDF chapters in the WEB workshop manuals described below are based on information available at the time of publication. The company reserves the right to make updates and modifications. The following are prohibited: reprinting, reproduction, forwarding to unauthorized people and/or third parties, and translation, including partial, without written authorization from Automobili Lamborghini S.p.A.

PAD WEAR AND BRAKE DISK WEAR TEST

The car has the carbon ceramic brakes.

PAD WEAR TEST

Pad wear is checked using a special sensor that signals the condition of the pads.
The technical data regarding the pads can be found in chapter 060000.

STOP **If the pads must be replaced (061503), always check the disk's minimum thickness (Brake disk wear test).**

BRAKE DISK WEAR TEST

Preliminary operations

- Remove the wheel **(060103)**.

Check the minimum thickness of the disk. If the minimum thickness is less than the minimum allowed, it must be replaced (061503).
The technical data regarding the disks can be found in chapter 060000.

® Automobili Lamborghini S.p.A.
The information and procedures published below are strictly confidential and exclusively for the Lamborghini Dealer Network and Authorized Service Points. All copyrights are property of Automobili Lamborghini S.p.A based on copyright law. All of the PDF chapters in the WEB workshop manuals described below are based on information available at the time of publication. The company reserves the right to make updates and modifications. The following are prohibited: reprinting, reproduction, forwarding to unauthorized people and/or third parties, and translation, including partial, without written authorization from Automobili Lamborghini S.p.A.

Carbon Ceramic Disks Specifications

If the holes of the disks are worn (**Fig.1**), the disks must be replaced if:

- the wear exceeds the edge of the hole by more that one millimeter.
- there are more than 20 damaged holes on one disk.
- there are 3 consecutive holes damaged.
- there are residues that block one or more holes (the diameter of the holes must be 5.5 ± 0.5 mm).

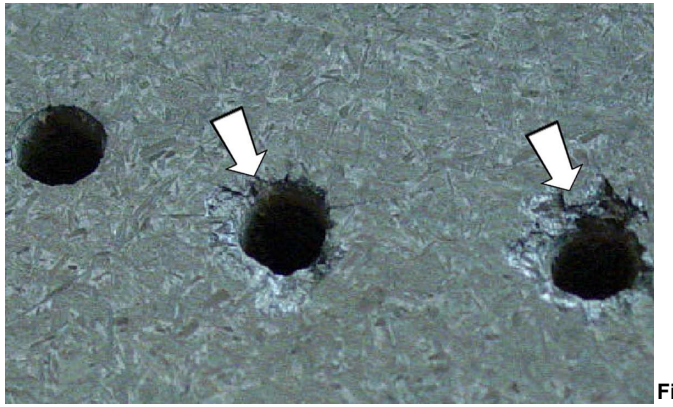

Fig.1

If the caliper attachment points are worn (**Fig.2**), the disks must be replaced if:

- the wear around the hole exceeds the striking surface of the screw's head by more than one millimeter (**A-Fig.2**).
- more than 5 cracks are visible in the area that supports the calipers or if there is chipping.
- there are more than 3 damaged holes on one disk.
- the screw's stud bolt is damaged or shows chipping.

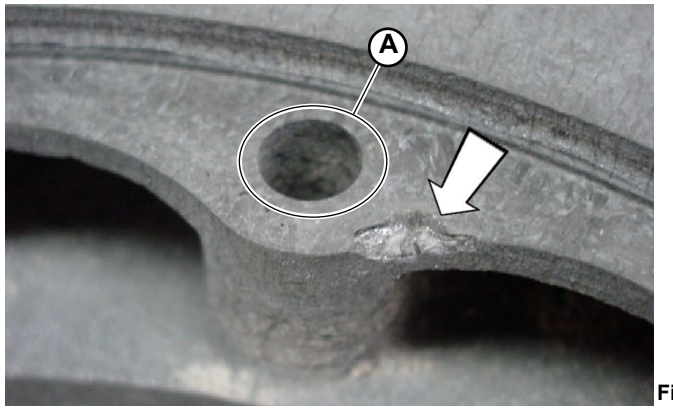

Fig.2

If the disk is worn (**Fig.3**), it must be replaced if:

- the edge of the disk is completely worn down (**B-Fig.3**).
- if there are obvious marks on the face of the disk (**C-Fig.3**).
- if there are cracks between the slotting on the circumference (**D-Fig.3**).
- the depth of the cracks on the circumference of the disk are greater than 2 mm.
- more than 10 cracks are visible on the disk's circumference.

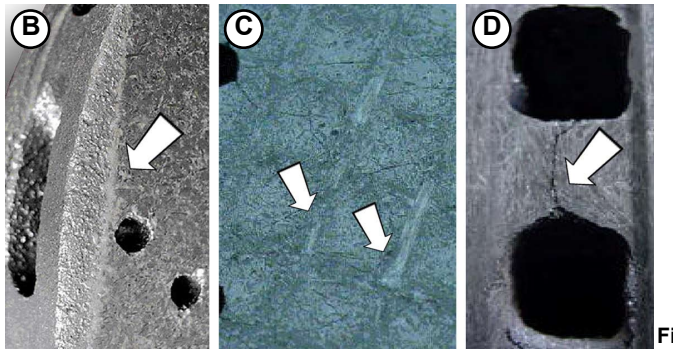

Fig.3

® Automobili Lamborghini S.p.A.
The information and procedures published below are strictly confidential and exclusively for the Lamborghini Dealer Network and Authorized Service Points. All copyrights are property of Automobili Lamborghini S.p.A based on copyright law. All of the PDF chapters in the WEB workshop manuals described below are based on information available at the time of publication. The company reserves the right to make updates and modifications. The following are prohibited: reprinting, reproduction, forwarding to unauthorized people and/or third parties, and translation, including partial, without written authorization from Automobili Lamborghini S.p.A.

There are 6 wear marks on the disk (**Fig.4**) that indicate the its level of use. The disk must be replaced when:

- the disk's surface has been reduced by more than 60% of the wear mark.
- none of the 6 wear marks are present.
- the wear mark cannot be used (covered by residues, silicone, etc.).

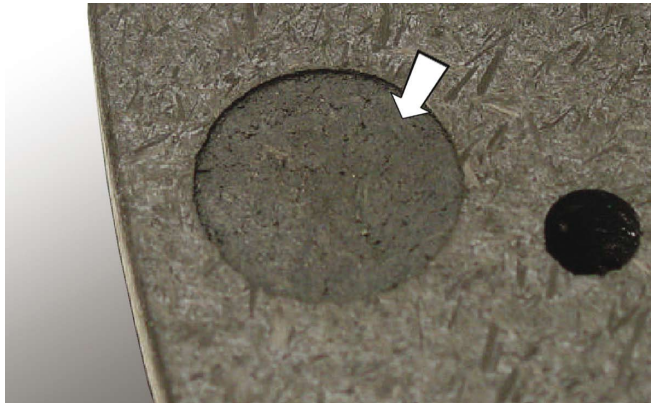

Fig.4

Replace the disk when it shows cracks and fractures on its surface (**Fig.5**).

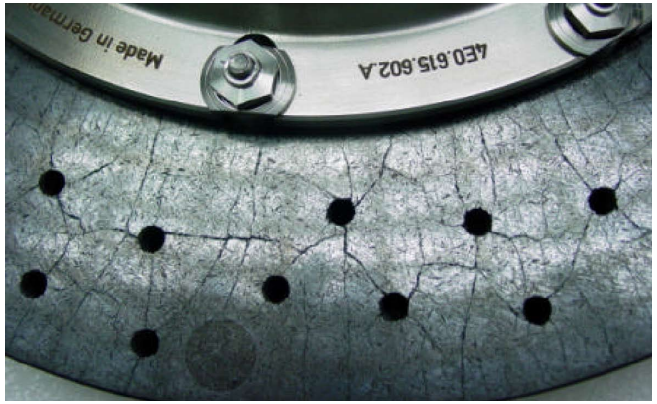

Fig.5

Check the bell (**Fig.6**) and replace the disk when:

- the holes on the bell are not beveled but rather have sharp edges.
- the symbols on the edge of the bell are incorrect (see example of a correct bell in the figure).

If the bell is scratched, remove the scratches by polishing the surface.

Keep all of the parts of the brake disks clean and free of residues.

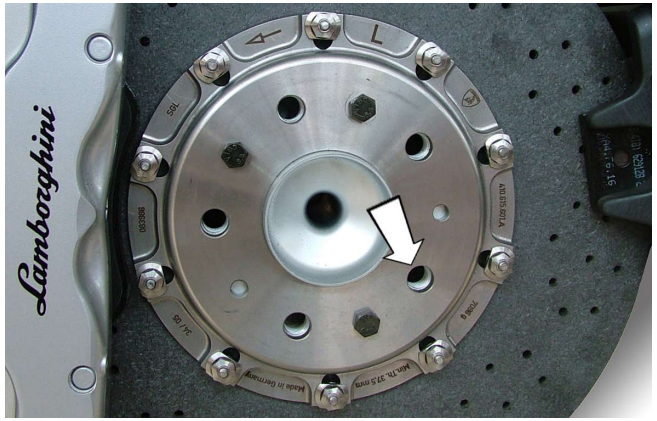

Fig.6

There must be a legible serial number on the disk itself; if this number is illegible, replace the disk.

® Automobili Lamborghini S.p.A.
The information and procedures published below are strictly confidential and exclusively for the Lamborghini Dealer Network and Authorized Service Points. All copyrights are property of Automobili Lamborghini S.p.A based on copyright law. All of the PDF chapters in the WEB workshop manuals described below are based on information available at the time of publication. The company reserves the right to make updates and modifications. The following are prohibited: reprinting, reproduction, forwarding to unauthorized people and/or third parties, and translation, including partial, without written authorization from Automobili Lamborghini S.p.A.

Replace the disk when its weight becomes lower than the weight printed on the disk's housing **(Fig.7).**

Each disk has a specific weight, which differs from the others.

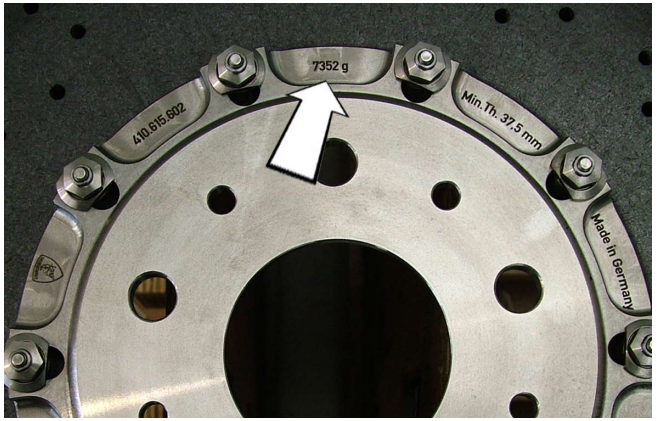

Fig.7

® Automobili Lamborghini S.p.A.
The information and procedures published below are strictly confidential and exclusively for the Lamborghini Dealer Network and Authorized Service Points. All copyrights are property of Automobili Lamborghini S.p.A based on copyright law. All of the PDF chapters in the WEB workshop manuals described below are based on information available at the time of publication. The company reserves the right to make updates and modifications. The following are prohibited: reprinting, reproduction, forwarding to unauthorized people and/or third parties, and translation, including partial, without written authorization from Automobili Lamborghini S.p.A.

BRAKES AND PADS DISASSEMBLY

- **Replace on all of the wheels and use original components only.**
- **The car has the carbon ceramic brakes.**

REAR BRAKES

Preliminary operations

- Remove the wheel **(060103)**.
- Remove the brake caliper **(060703)** and the parking brake **(060203)** (The parking brake is fitted only on the 2 rear wheels).

Rear brake disk disassembly

1. Loosen the 3 brake disk mounting bolts (**A-Fig.1**).
2. Remove the brake disc.

STOP **Do not bump or damage the carbon ceramic brake disks in any way when handling them.**

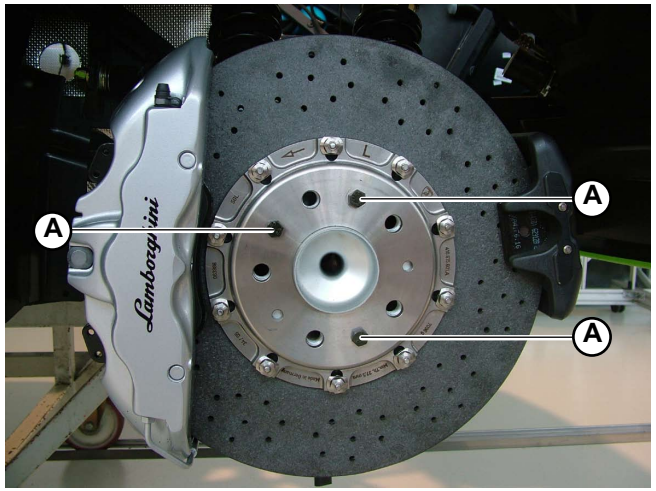

Fig.1

® Automobili Lamborghini S.p.A.
The information and procedures published below are strictly confidential and exclusively for the Lamborghini Dealer Network and Authorized Service Points. All copyrights are property of Automobili Lamborghini S.p.A based on copyright law. All of the PDF chapters in the WEB workshop manuals described below are based on information available at the time of publication. The company reserves the right to make updates and modifications. The following are prohibited: reprinting, reproduction, forwarding to unauthorized people and/or third parties, and translation, including partial, without written authorization from Automobili Lamborghini S.p.A.

FRONT BRAKES

Preliminary operations
- Remove the wheel **(060103)**.
- Remove the brake caliper **(060703)**.

Rear brake disk disassembly
1. Loosen the 3 brake disk mounting bolts (**A-Fig.2**).
2. Remove the brake disc.

Do not bump or damage the carbon ceramic brake disks in any way when handling them.

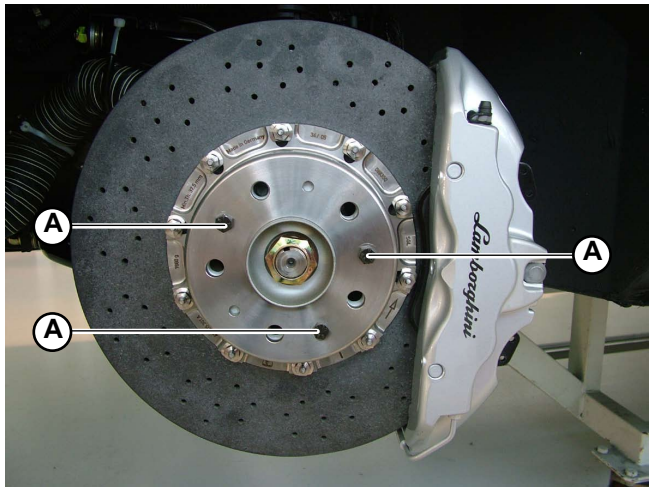

Fig.2

PADS

Preliminary operations:
- Remove the wheel **(060103)**.
- Detach the pad connector **(060703)**.

Disassembling CARBON CERAMIC brake pads from calipers:
1. Unscrew and remove the pin (**A-Fig.3**) from the caliper.
2. Remove the bracket (**B-Fig.3**) from the caliper.
3. Use a pliers to remove the pads from their seat.

The front brake caliper pads have got a left and right side arrow.
The rear brake caliper pads have got no arrow.

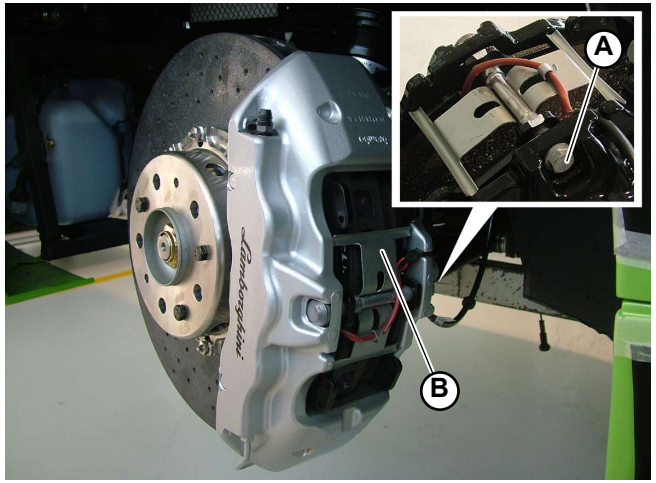

Fig.3

® Automobili Lamborghini S.p.A.
The information and procedures published below are strictly confidential and exclusively for the Lamborghini Dealer Network and Authorized Service Points. All copyrights are property of Automobili Lamborghini S.p.A based on copyright law. All of the PDF chapters in the WEB workshop manuals described below are based on information available at the time of publication. The company reserves the right to make updates and modifications. The following are prohibited: reprinting, reproduction, forwarding to unauthorized people and/or third parties, and translation, including partial, without written authorization from Automobili Lamborghini S.p.A.

BRAKES AND PADS ASSEMBLY

- **Replace on all of the wheels and use original components only.**
- **The car has the carbon ceramic brakes.**

REAR BRAKES

1. Secure the brake disk using the three bolts (**A-Fig.1**).
Bolt fastening: **tightening torque (000800-29d).**

- Assemble the brake caliper **(060705)** and the parking brake **(060205)** (The parking brake is fitted on the two rear wheels only).
- Reassemble the wheel **(060105)**.

On the carbon ceramic braking system, the rotation direction (arrow) and the side of assembly (L-Left, R-Right) is indicated on the disk (B-Fig.1).

Do not bump or damage the carbon ceramic brake disks in any way when handling them.

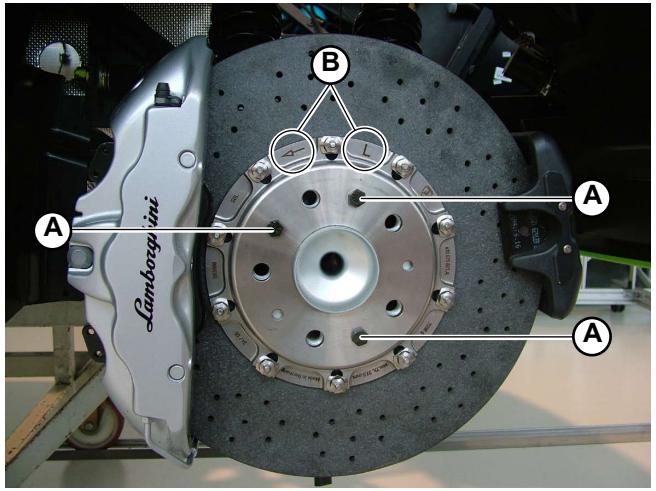

Fig.1

® Automobili Lamborghini S.p.A.
The information and procedures published below are strictly confidential and exclusively for the Lamborghini Dealer Network and Authorized Service Points. All copyrights are property of Automobili Lamborghini S.p.A based on copyright law. All of the PDF chapters in the WEB workshop manuals described below are based on information available at the time of publication. The company reserves the right to make updates and modifications. The following are prohibited: reprinting, reproduction, forwarding to unauthorized people and/or third parties, and translation, including partial, without written authorization from Automobili Lamborghini S.p.A.

FRONT BRAKES

1. Secure the brake disk using the three bolts (**A-Fig.2**).
   Bolt fastening: **tightening torque (000800-29d).**

- Assemble the brake caliper **(060705)**.
- Reassemble the wheel **(060105)**.

On the carbon ceramic braking system, the rotation direction (arrow) and the side of assembly (L-Left, R-Right) is indicated on the disk (B-Fig.2).

STOP **Do not bump or damage the carbon ceramic brake disks in any way when handling them.**

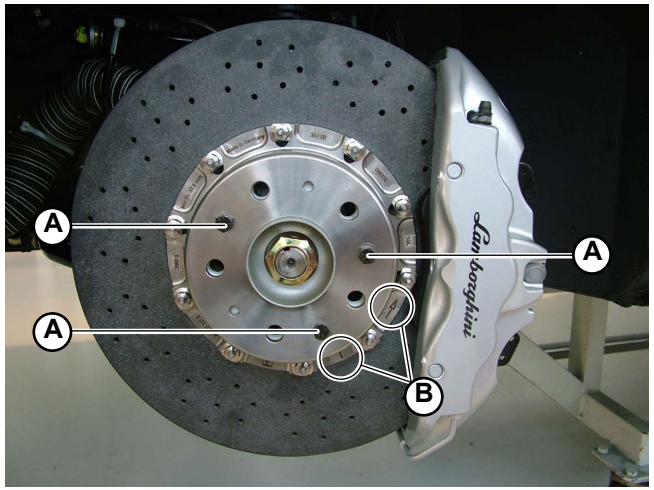

Fig.2

PADS

Assembling CARBON CERAMIC brake pads onto calipers:

1. Using a set of pliers, insert the pads inside their seat.
2. Position the bracket (**A-Fig.3**) on the caliper.
3. Insert and tighten the pin (**B-Fig.3**) on the caliper.

- Connect the connector for the pads **(060705)**.
- Reassemble the wheel **(060105)**.

STOP **The front brake caliper pads have a left and right side arrow. Be very careful therefore during assembly to insert the pads in the correct position.**
The rear brake caliper pads, rather, do not have any arrows

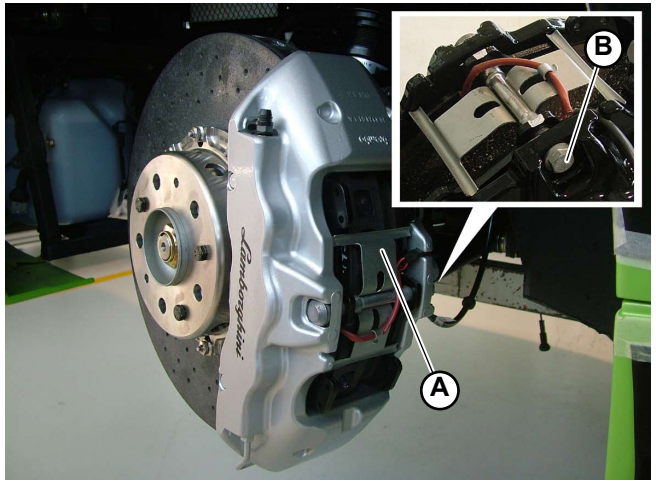

Fig.3

® Automobili Lamborghini S.p.A.
The information and procedures published below are strictly confidential and exclusively for the Lamborghini Dealer Network and Authorized Service Points. All copyrights are property of Automobili Lamborghini S.p.A based on copyright law. All of the PDF chapters in the WEB workshop manuals described below are based on information available at the time of publication. The company reserves the right to make updates and modifications. The following are prohibited: reprinting, reproduction, forwarding to unauthorized people and/or third parties, and translation, including partial, without written authorization from Automobili Lamborghini S.p.A.

EUROPE
ROW

Bedding in procedure on roads with speed limits

Carbon Ceramic Brake Discs

1. Apply brake pedal pressure with low deceleration 25 times (approx. 25%)* out of a speed of 62.14 mph (100 km/h) to 31.07 mph (50 km/h) with a time interval of approx. 30 seconds.
2. Apply brake pedal pressure with medium deceleration 15 times (approx. 25% to 60%)* out of a speed of 74.57 mph (120 km/h) kph to 31.07 mph (50 km/h) with a time interval of approx. 60 seconds.
3. Apply brake pedal pressure with low deceleration 10 times (approx. 25% to 30%)* out of a speed of 74.57 mph (120 km/h) to 49.71 mph (80 km/h) with a time interval of approx. 60 seconds.

* Scale is the maximum possible deceleration of the vehicle.

Ceramic brake disks improve braking efficiency compared to standard disks because of the following characteristics:

- better deceleration/load ratio at pedal
- better resistance to repeated braking with less wear of pads and disks
- higher pad/disk friction coefficients with consequent improved performance
- they require a more precise running-in procedure

STOP

- **Do not accelerate and brake simultaneously. Allow brakes to cool between each application.**
- **Observe the speed limits of the countries in which you are driving.**

® Automobili Lamborghini S.p.A.
The information and procedures published below are strictly confidential and exclusively for the Lamborghini Dealer Network and Authorized Service Points. All copyrights are property of Automobili Lamborghini S.p.A based on copyright law. All of the PDF chapters in the WEB workshop manuals described below are based on information available at the time of publication. The company reserves the right to make updates and modifications. The following are prohibited: reprinting, reproduction, forwarding to unauthorized people and/or third parties, and translation, including partial, without written authorization from Automobili Lamborghini S.p.A.

USA
CANADA

Brake pad bedding in procedure

The vehicle is delivered with the brake pads already bedded-in. In order to ensure the pads adapt perfectly to the discs, replacement pads should be bedded-in using the following procedure:

Bedding in procedure on roads with speed limits

Carbon Ceramic Brake Discs

1. Apply brake pedal pressure with low deceleration 25 times (approx. 25%)* out of a speed of 62.14 mph (100 km/h) to 31.07 mph (50 km/h) with a time interval of approx. 30 seconds.

2. Apply brake pedal pressure with medium deceleration 15 times (approx. 25% to 60%)* out of a speed of 74.57 mph (120 km/h) kph to 31.07 mph (50 km/h) with a time interval of approx. 60 seconds.

3. Apply brake pedal pressure with low deceleration 10 times (approx. 25% to 30%)* out of a speed of 74.57 mph (120 km/h) to 49.71 mph (80 km/h) with a time interval of approx. 60 seconds.

* Scale is the maximum possible deceleration of the vehicle.

Ceramic brake disks improve braking efficiency compared to standard disks because of the following characteristics:
- better deceleration/load ratio at pedal
- better resistance to repeated braking with less wear of pads and disks
- higher pad/disk friction coefficients with consequent improved performance
- they require a more precise running-in procedure

STOP
- **Do not accelerate and brake simultaneously. Allow brakes to cool between each application.**
- **Observe the speed limits of the countries in which you are driving.**

WARNING!

New brake pads do not have the best stopping power for the first 250 miles (400 km) and must be broken in.
- **Never follow other vehicles to closely or put yourself into other situations that might require sudden, hard braking, especially when the brake pads have not been broken in.**
- **Please use caution regarding other traffic during the break-in procedure and observe the speed limit in which the country you are driving.**

® Automobili Lamborghini S.p.A.
The information and procedures published below are strictly confidential and exclusively for the Lamborghini Dealer Network and Authorized Service Points. All copyrights are property of Automobili Lamborghini S.p.A based on copyright law. All of the PDF chapters in the WEB workshop manuals described below are based on information available at the time of publication. The company reserves the right to make updates and modifications. The following are prohibited: reprinting, reproduction, forwarding to unauthorized people and/or third parties, and translation, including partial, without written authorization from Automobili Lamborghini S.p.A.

TCS system

The TCS engine control system manages the engine output torque on slippery roads.
The TCS system detects the vehicle skidding conditions according to the speed of each wheel and reduces the output torque by means of the **fuel ignition cut-off and the choking** of the DBW throttle opening till the proper traction control is restored.
The TCS system uses the same signals from the phonic wheels, also used by the ABS system, and reduces the torque through the injection system.

TCS system architecture (Fig.1)	
A.	Right front phonic wheel
B.	Right rear phonic wheel
C.	Left rear phonic wheel
D.	Left front phonic wheel
E.	Cylinder bank 7-12 LIE control unit
F.	Cylinder bank 1-6 LIE control unit
G.	Cylinder bank 7-12 DBW
H.	Cylinder bank 1-6 DBW

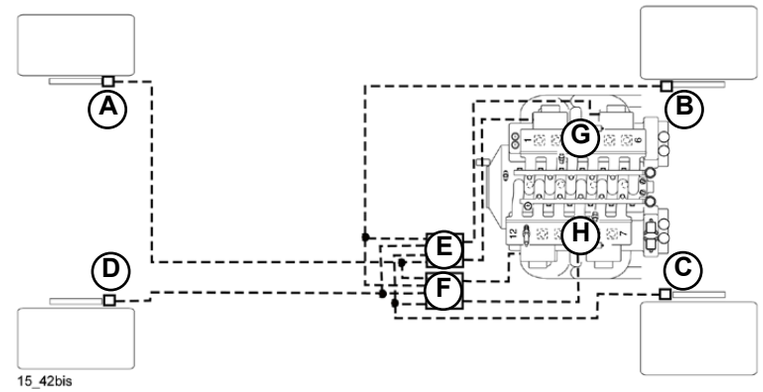

Fig.1

The TCS system uses the same sensors as the ABS system to detect wheel rotation, carrying out the double function of ABS/traction control.

® Automobili Lamborghini S.p.A.
The information and procedures published below are strictly confidential and exclusively for the Lamborghini Dealer Network and Authorized Service Points. All copyrights are property of Automobili Lamborghini S.p.A based on copyright law. All of the PDF chapters in the WEB workshop manuals described below are based on information available at the time of publication. The company reserves the right to make updates and modifications. The following are prohibited: reprinting, reproduction, forwarding to unauthorized people and/or third parties, and translation, including partial, without written authorization from Automobili Lamborghini S.p.A.

The system is equipped with a warning light on the dashboard and a push-button on the tunnel for the deactivation. In particular:

Warning light	Push-Button	Meaning
	Not deactivated	The TCS does not detect difficult adhesion conditions
Off	Deactivated	Warning light and/or push-button and/or TCS harness malfunction
	Not deactivated	**The TCS is operating**
Flashing	Deactivated	Warning light and/or push-button and/or TCS harness malfunction
	Not deactivated	**TCS failure**
Staying on	Deactivated	TCS deactivated

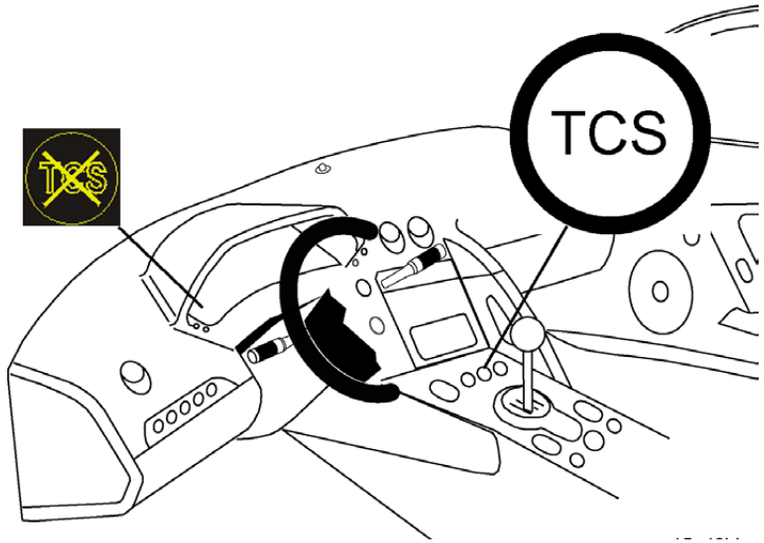

Fig.2

Due to the system architecture, the failure warning to the TCS system is generally caused by failures in the ABS and/or Injection systems, so it takes place when one or more warning lights related to these systems switch on:

System	Warning light on	Meaning
ABS	ABS	Malfunction of one or more signals from phonic wheels
Injection	Check engine 1-6	Cylinder bank 1-6 injection system malfunction
	Check engine 7-12	Cylinder bank 7-12 injection system malfunction

® Automobili Lamborghini S.p.A.
The information and procedures published below are strictly confidential and exclusively for the Lamborghini Dealer Network and Authorized Service Points. All copyrights are property of Automobili Lamborghini S.p.A based on copyright law. All of the PDF chapters in the WEB workshop manuals described below are based on information available at the time of publication. The company reserves the right to make updates and modifications. The following are prohibited: reprinting, reproduction, forwarding to unauthorized people and/or third parties, and translation, including partial, without written authorization from Automobili Lamborghini S.p.A.

Suspension mounting points (view from above) (Fig.1)	
(A):	Reference mark
(D):	Reference mark
0Y:	Vehicle middle axis
1.	Front suspension upper front
2.	Front suspension upper rear
3.	Front suspension lower front
4.	Front suspension lower rear
5.	Front suspension shock absorber
6.	Rear suspension upper front
7.	Rear suspension upper rear
8.	Rear suspension lower front
9.	Rear suspension lower rear
10.	Rear suspension front shock absorber
11.	Rear suspension rear shock absorber

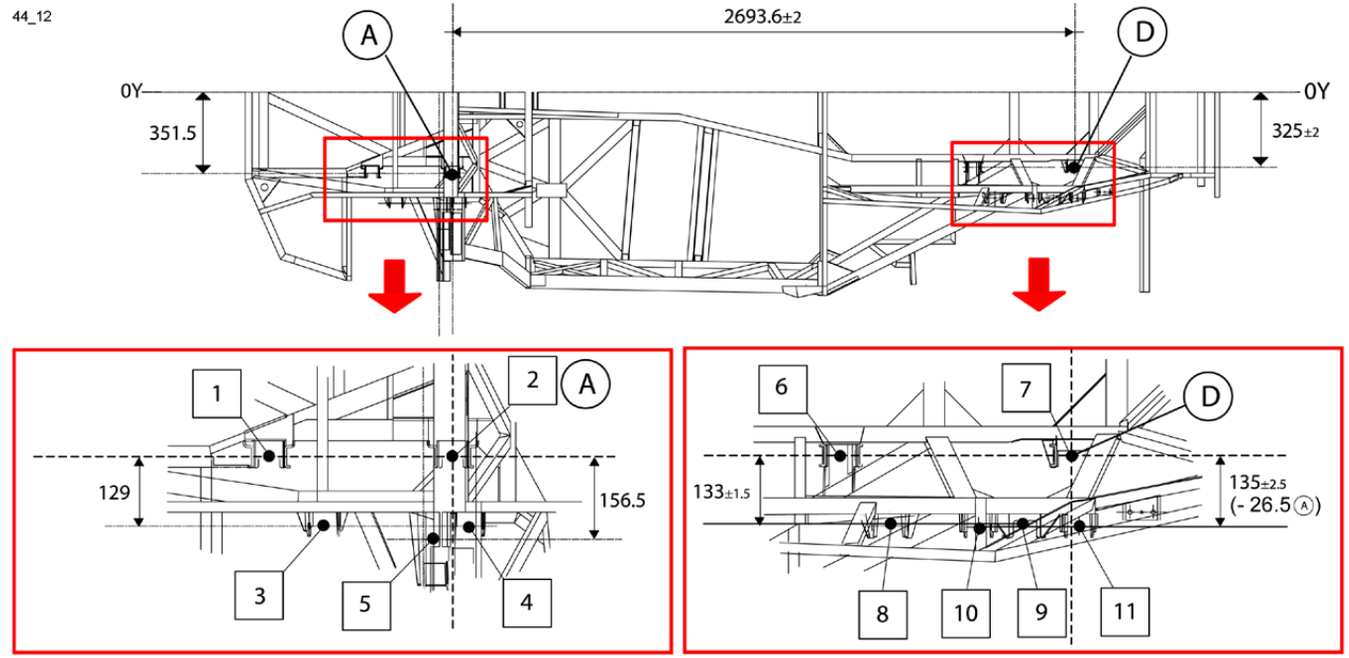

Fig.1

® Automobili Lamborghini S.p.A.
The information and procedures published below are strictly confidential and exclusively for the Lamborghini Dealer Network and Authorized Service Points. All copyrights are property of Automobili Lamborghini S.p.A based on copyright law. All of the PDF chapters in the WEB workshop manuals described below are based on information available at the time of publication. The company reserves the right to make updates and modifications. The following are prohibited: reprinting, reproduction, forwarding to unauthorized people and/or third parties, and translation, including partial, without written authorization from Automobili Lamborghini S.p.A.

Suspension mounting points (side view) (Fig.2)	
(A):	Reference mark
(D):	Reference mark
0Z:	Reference axis
1.	Front suspension upper front
2.	Front suspension upper rear
3.	Front suspension lower front
4.	Front suspension lower rear
5.	Front suspension shock absorber
6.	Rear suspension upper front
7.	Rear suspension upper rear
8.	Rear suspension lower front
9.	Rear suspension lower rear
10.	Rear suspension front shock absorber
11.	Rear suspension rear shock absorber

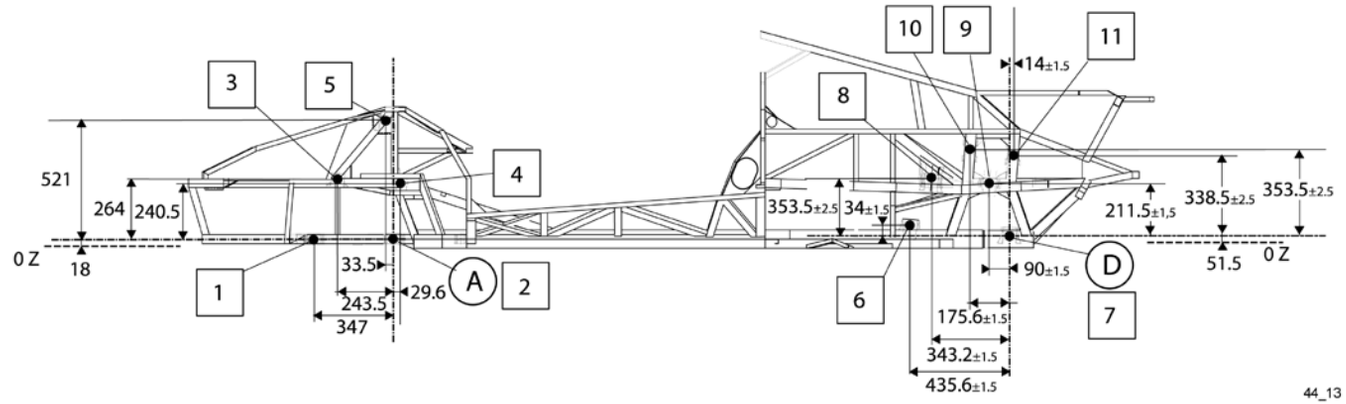

Fig.2

® Automobili Lamborghini S.p.A.
The information and procedures published below are strictly confidential and exclusively for the Lamborghini Dealer Network and Authorized Service Points. All copyrights are property of Automobili Lamborghini S.p.A based on copyright law. All of the PDF chapters in the WEB workshop manuals described below are based on information available at the time of publication. The company reserves the right to make updates and modifications. The following are prohibited: reprinting, reproduction, forwarding to unauthorized people and/or third parties, and translation, including partial, without written authorization from Automobili Lamborghini S.p.A.

Brake pedal test (ONLY FOR E-GEAR VERSION)

1. Position a rod so that one end passes near the steering wheel (**A-Fig.1**), and the other is positioned on the bottom left corner of the brake pedal (**B-Fig 2**).

2. Hold the pedal in the neutral position and mark the height at which the steering wheel is aligned on the rod.

3. Act on the brake pedal until the STOP lights switch on (allow the rod to slide downwards), and then mark the height at which the steering wheel is aligned on the rod.

4. Measure the distance between the two marks. The pedal stroke MUST measure between 4 and 12 millimetres. If these values do not correspond, adjust the SWITCH **(092702)**.

Fig.1

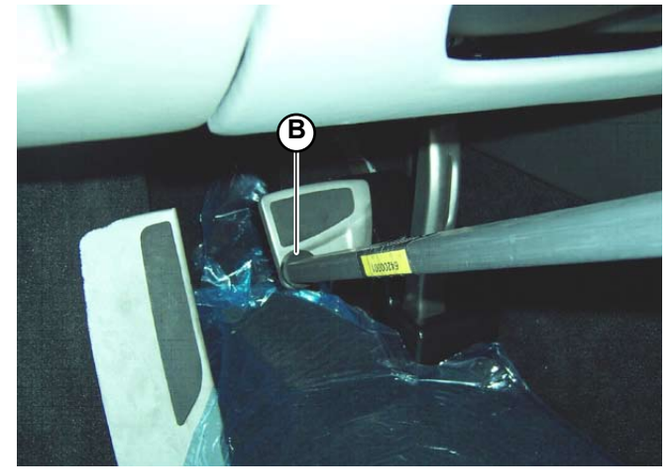

Fig.2

® Automobili Lamborghini S.p.A.
The information and procedures published below are strictly confidential and exclusively for the Lamborghini Dealer Network and Authorized Service Points. All copyrights are property of Automobili Lamborghini S.p.A based on copyright law. All of the PDF chapters in the WEB workshop manuals described below are based on information available at the time of publication. The company reserves the right to make updates and modifications. The following are prohibited: reprinting, reproduction, forwarding to unauthorized people and/or third parties, and translation, including partial, without written authorization from Automobili Lamborghini S.p.A.

Accelerator pedal adjustment

- To set the minimum, act on the side bar (**A-Fig.2**).
- To adjust the maximum stroke, act on the bolt (**B-Fig.1**).

CAUTION

After any adjustments have been made, use the specific 'accelerator pedal adjustment' window in the LDAS-32 system (109100) to check the accelerator pedal value. Ensure the minimum and maximum settings fall between 150 (+ o - 15) and 700 (+ o – 15) bit.

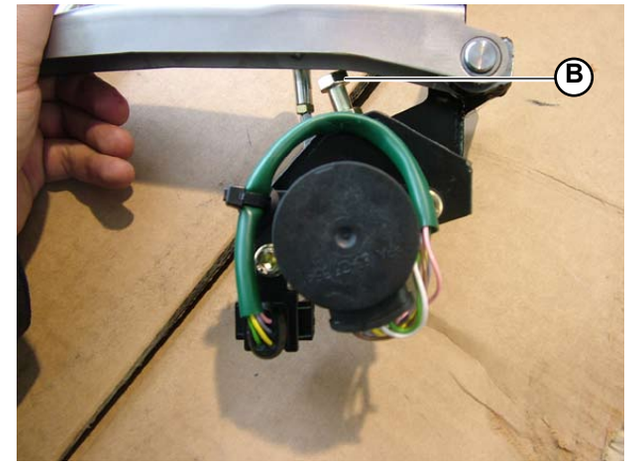

Fig.1

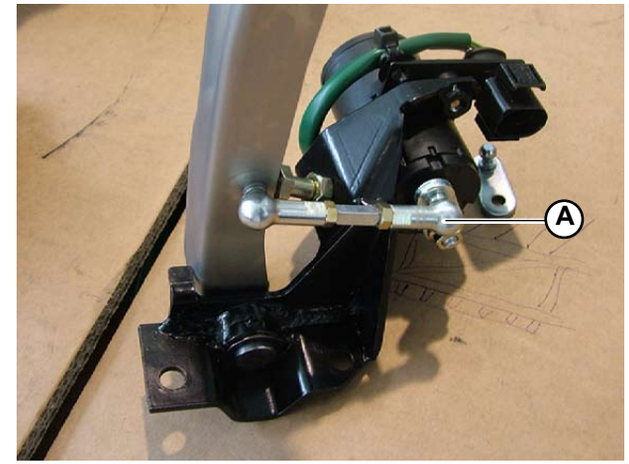

Fig.2

® Automobili Lamborghini S.p.A.
The information and procedures published below are strictly confidential and exclusively for the Lamborghini Dealer Network and Authorized Service Points. All copyrights are property of Automobili Lamborghini S.p.A based on copyright law. All of the PDF chapters in the WEB workshop manuals described below are based on information available at the time of publication. The company reserves the right to make updates and modifications. The following are prohibited: reprinting, reproduction, forwarding to unauthorized people and/or third parties, and translation, including partial, without written authorization from Automobili Lamborghini S.p.A.

The present section contains the following disassembly sequences:

A) Disassembling the brake + clutch pedal cluster (manual gearbox version only)

B) Disassembling the accelerator pedal cluster

A) Disassembling the brake + clutch pedal cluster (manual gearbox version only)

Preliminary operations

- Disassemble the dashboard cover with the instrument cluster **(086803)**.
- Disassemble the GFA **(098103)**.
- Disassemble the brake booster **(061203)**.

Disassembly

1. Detach the plastic pedal covers from the rivets securing them to the car floor.
2. Detach the pedal cluster support (**A-Fig.1**) by unscrewing the 4 fixing screws (**B-Fig.1**).
3. Remove the pedal cluster.

To disassemble the pedal from the pedal cluster:

4. Detach the spring (**C-Fig.1**) connecting the pedal cluster support to the pedal (1 spring for E-Gear cars, 2 springs for manual gearbox cars).
5. Detach the clip (**D-Fig. 2**) and extract the journal (**E-Fig.2**) fixing the pin (**F-Fig.2**) to the fork (**G-Fig.2**).
6. Extract the snap ring (**H-Fig.1**) on the right.
7. Extract the shaft from the right (exert enough pressure to get it to exit from the left).
8. Extract the shim (**L-Fig.1**) (1 shim for E-Gear cars, 2 for manual gearbox cars).
9. Remove the pedal (**M-Fig.1**)

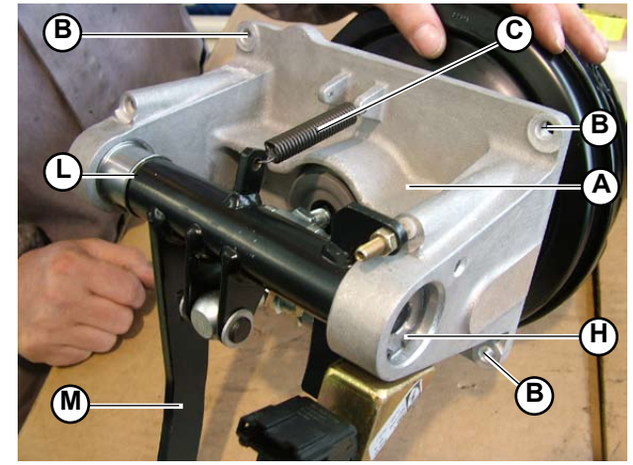

Fig.1

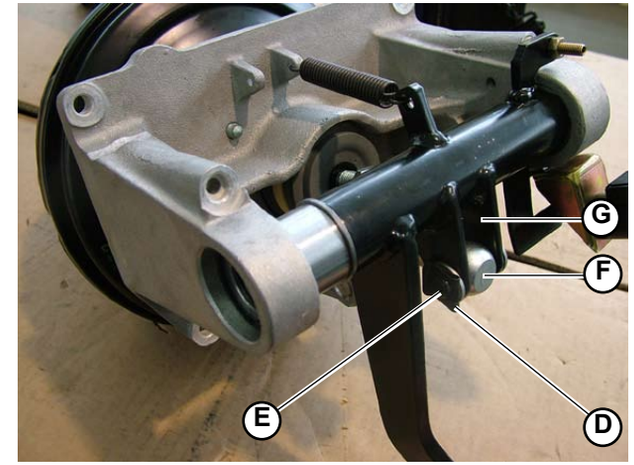

Fig.2

® Automobili Lamborghini S.p.A.
The information and procedures published below are strictly confidential and exclusively for the Lamborghini Dealer Network and Authorized Service Points. All copyrights are property of Automobili Lamborghini S.p.A based on copyright law. All of the PDF chapters in the WEB workshop manuals described below are based on information available at the time of publication. The company reserves the right to make updates and modifications. The following are prohibited: reprinting, reproduction, forwarding to unauthorized people and/or third parties, and translation, including partial, without written authorization from Automobili Lamborghini S.p.A.

B) Disassembling the accelerator pedal cluster

1. Detach the plastic pedal cover from the rivets securing it to the car floor.
2. Detach the potentiometer port connection (**A-Fig.3**).
3. Unscrew the 2 screws (**B-Fig.3**) securing the pedal cluster plate to the car floor.

To disassemble the pedal:

4. Detach the 2 fixing pins and extract the journal (**C-Fig.3**).
5. Detach the ball joint (**D-Fig.3**).

To disassemble the potentiometer:

4. Extract the connection port from the fork (**E-Fig.3**) to which it is connected.
5. Unscrew the 2 Allen screws (**F-Fig.4**) securing the potentiometer.

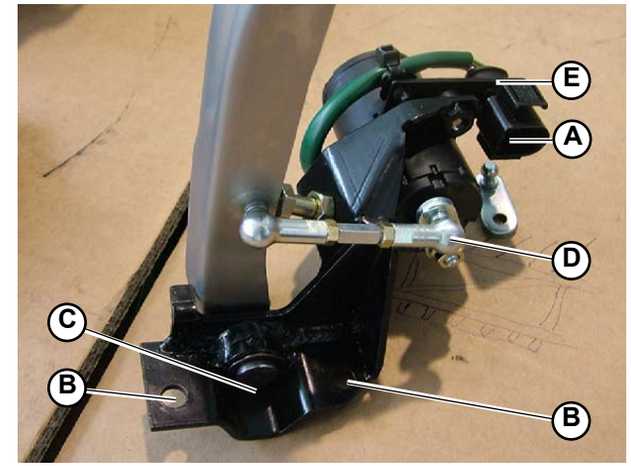

Fig.3

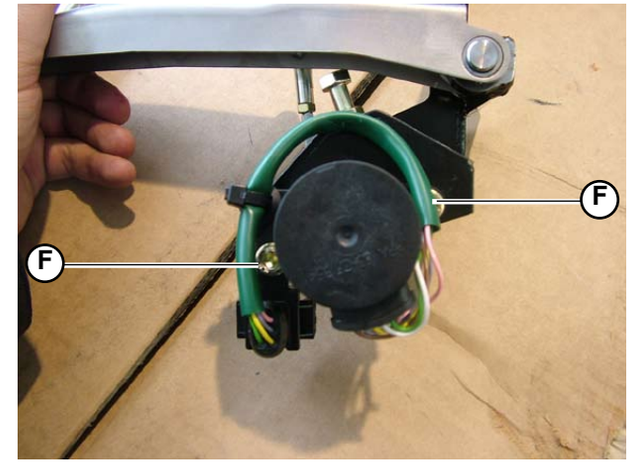

Fig.4

® Automobili Lamborghini S.p.A.
The information and procedures published below are strictly confidential and exclusively for the Lamborghini Dealer Network and Authorized Service Points. All copyrights are property of Automobili Lamborghini S.p.A based on copyright law. All of the PDF chapters in the WEB workshop manuals described below are based on information available at the time of publication. The company reserves the right to make updates and modifications. The following are prohibited: reprinting, reproduction, forwarding to unauthorized people and/or third parties, and translation, including partial, without written authorization from Automobili Lamborghini S.p.A.

The present section contains the following assembly sequences:

A) Assembling the brake + clutch pedal cluster (manual gearbox version only)

B) Assembling the accelerator pedal cluster

A) Assembling the brake + clutch pedal cluster (manual gearbox version only)

To assemble the pedal on the pedal cluster:

1. Position the pedal (**A-Fig.1**) using the shims (**B-Fig.1**) (1 shim for E-Gear cars, 2 for manual gearbox cars).
2. Insert the shaft from the right and use the LH snap ring to adjust the stroke.
3. Position the snap ring (**C-Fig.1**) on the right.
4. Insert the journal (**D-Fig.2**) and secure using the clip (**E-Fig.2**) to anchor the pin (**F-Fig.2**) to the fork (**G-Fig.2**).
5. Connect the pedal to the support using the spring (**H-Fig.1**) (1 spring for E-Gear cars, 2 for manual gearbox cars).

To assemble the entire pedal cluster on the car:

6. Fix the pedal cluster support (**I-Fig.1**) to the car floor using the 4 screws (**M-Fig.1**).
7. Assemble the plastic covers above the pedals using the rivets.
8. Run a brake pedal test **(080201)**.

- Assemble the brake booster **(061205)**.
- Assemble the GFA **(098105)**.
- Assemble the dashboard cover with the instrument cluster **(086803)**.

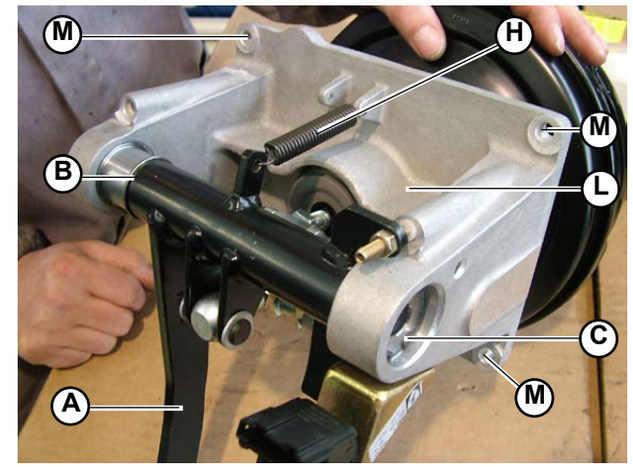

Fig.1

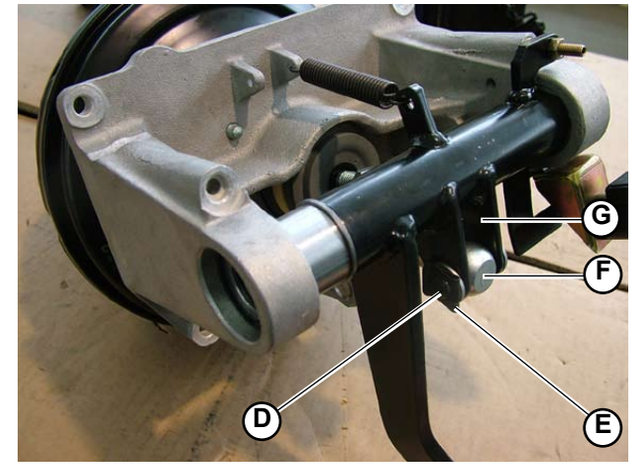

Fig.2

® Automobili Lamborghini S.p.A.
The information and procedures published below are strictly confidential and exclusively for the Lamborghini Dealer Network and Authorized Service Points. All copyrights are property of Automobili Lamborghini S.p.A based on copyright law. All of the PDF chapters in the WEB workshop manuals described below are based on information available at the time of publication. The company reserves the right to make updates and modifications. The following are prohibited: reprinting, reproduction, forwarding to unauthorized people and/or third parties, and translation, including partial, without written authorization from Automobili Lamborghini S.p.A.

B) Assembling the accelerator pedal cluster

To assemble the potentiometer:

1. Screw the potentiometer to the pedal cluster bracket using the relative screws (**A-Fig.3**).
2. Insert the connection port into the relative fork (**B-Fig.4**).

To assemble the pedal:

3. Insert the pedal fixing journal (**C-Fig.4**) and lock using 2 pins.
4. Connect the pedal and the potentiometer using the ball joint (**D-Fig.4**).

CAUTION
Once the procedure has been completed, adjust the accelerator pedal (080202)

To secure the pedal cluster to the car:

5. Act on the 2 screws to secure the pedal cluster bracket (**E-Fig.4**).
6. Connect the potentiometer to the connection (**F-Fig.4**).
7. Assemble the plastic cover above the pedal using the rivets.

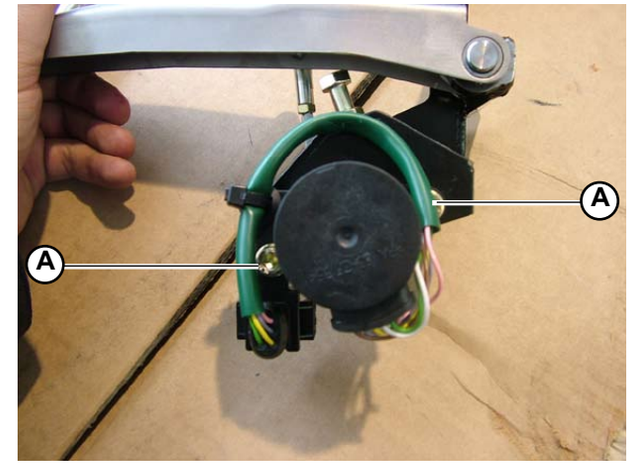

Fig.4

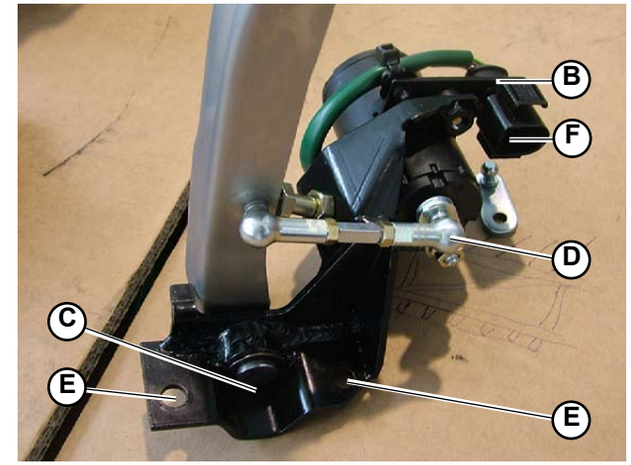

Fig.3

® Automobili Lamborghini S.p.A.
The information and procedures published below are strictly confidential and exclusively for the Lamborghini Dealer Network and Authorized Service Points. All copyrights are property of Automobili Lamborghini S.p.A based on copyright law. All of the PDF chapters in the WEB workshop manuals described below are based on information available at the time of publication. The company reserves the right to make updates and modifications. The following are prohibited: reprinting, reproduction, forwarding to unauthorized people and/or third parties, and translation, including partial, without written authorization from Automobili Lamborghini S.p.A.

Checking the bonnet alignment

When the bonnet is closed, ensure it is correctly aligned with the rest of the car body. If unaligned, proceed as follows:

- Act on the two fixing screws (**B-Fig.1**) to check the position of the two hinges (**A-Fig.1**).

When the bonnet is closed, ensure it is at the correct height compared to the rest of the car body. If unaligned, proceed as follows:

- Check the position of the bonnet catch (**C-Fig.1**). Act on the two screws (**D-Fig.1**) to centre the catch with the housing it hooks in to.
- Check the height of the bonnet catch (**C-Fig.1**). If necessary, add or remove spacers.

Checking the closure of the bonnet

Close the bonnet. Insert two fingers underneath the bonnet and attempt to prize up. Ensure the bonnet does not open. If this is not the case, proceed as follows:

- Check the position of the safety catch (**E-Fig.1**). Act on the fixing screw (**F-Fig.1**) to move either forwards or backwards.
- Check the height of the safety catch (**E-Fig.1**). If necessary, add or remove spacers.

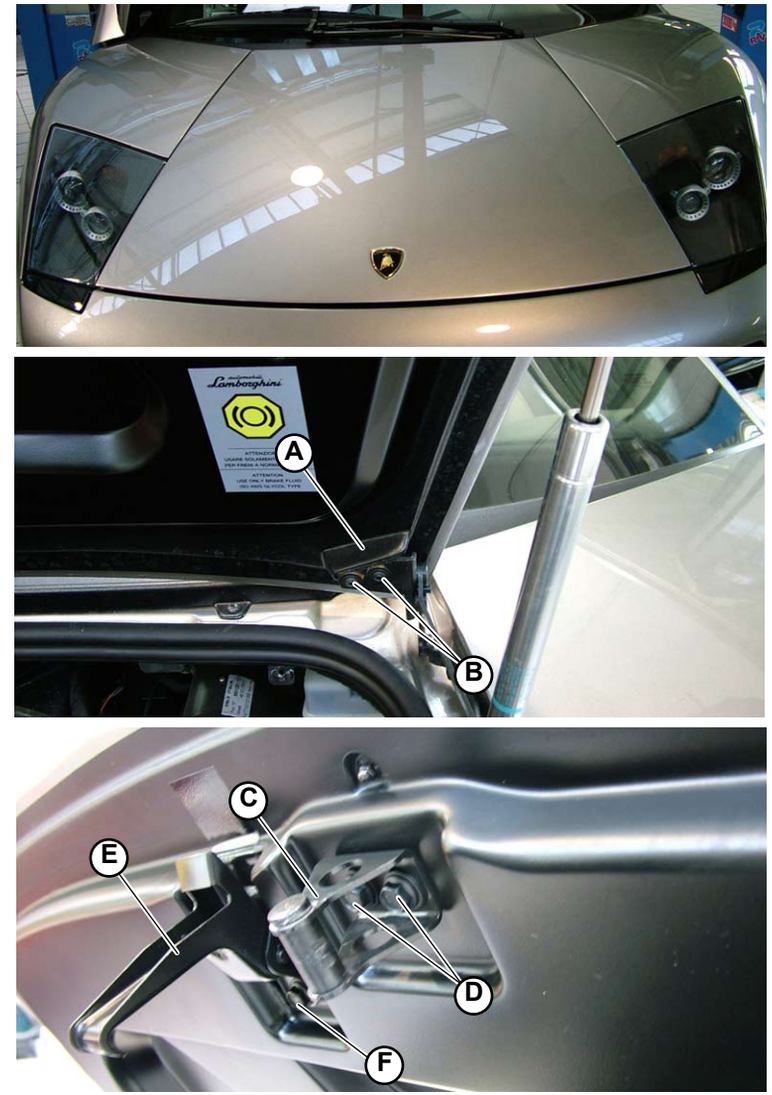

Fig.1

® Automobili Lamborghini S.p.A.
The information and procedures published below are strictly confidential and exclusively for the Lamborghini Dealer Network and Authorized Service Points. All copyrights are property of Automobili Lamborghini S.p.A based on copyright law. All of the PDF chapters in the WEB workshop manuals described below are based on information available at the time of publication. The company reserves the right to make updates and modifications. The following are prohibited: reprinting, reproduction, forwarding to unauthorized people and/or third parties, and translation, including partial, without written authorization from Automobili Lamborghini S.p.A.

This section explains how to disassemble:

A) Front bonnet support pistons
B) Lock cover
C) Luggage compartment lock
D) Front bonnet lock
E) Interior luggage compartment lid
F) Front bonnet
G) Interior luggage compartment grid
H) Bumper cover

® Automobili Lamborghini S.p.A.
The information and procedures published below are strictly confidential and exclusively for the Lamborghini Dealer Network and Authorized Service Points. All copyrights are property of Automobili Lamborghini S.p.A based on copyright law. All of the PDF chapters in the WEB workshop manuals described below are based on information available at the time of publication. The company reserves the right to make updates and modifications. The following are prohibited: reprinting, reproduction, forwarding to unauthorized people and/or third parties, and translation, including partial, without written authorization from Automobili Lamborghini S.p.A.

A) Disassembling the front bonnet support pistons

1. Install a support which will prop up the front bonnet once the 2 pistons have been disassembled.

CAUTION

Never disassemble the front bonnet support pistons unless another support has already been positioned in their place.

2. Using the tip of a screwdriver, lift the clamps (**A-Fig.1**) located in the 2 ball joints of each piston.
3. Once the clamp has been lifted, detach the ball joints (**B-Fig.1**) from the couplings on the front bonnet and luggage compartment.

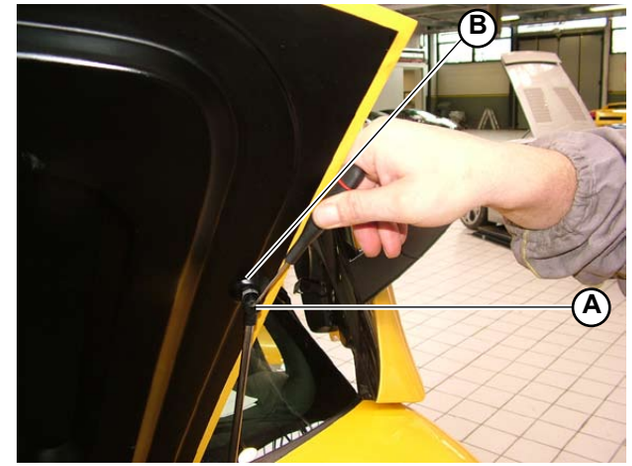

Fig.1

® Automobili Lamborghini S.p.A.
The information and procedures published below are strictly confidential and exclusively for the Lamborghini Dealer Network and Authorized Service Points. All copyrights are property of Automobili Lamborghini S.p.A based on copyright law. All of the PDF chapters in the WEB workshop manuals described below are based on information available at the time of publication. The company reserves the right to make updates and modifications. The following are prohibited: reprinting, reproduction, forwarding to unauthorized people and/or third parties, and translation, including partial, without written authorization from Automobili Lamborghini S.p.A.

B) Disassembling the lock cover

1. Detach the gaskets (**A-Fig.2**) on the front of the luggage compartment.
2. Disassemble the lock cover (**B-Fig.2**) by unscrewing the 2 screws (**C-Fig.2**) (one on the right and one on the left) fixing the cover to the luggage compartment.
3. Remove the cover.

Fig.2

® Automobili Lamborghini S.p.A.
The information and procedures published below are strictly confidential and exclusively for the Lamborghini Dealer Network and Authorized Service Points. All copyrights are property of Automobili Lamborghini S.p.A based on copyright law. All of the PDF chapters in the WEB workshop manuals described below are based on information available at the time of publication. The company reserves the right to make updates and modifications. The following are prohibited: reprinting, reproduction, forwarding to unauthorized people and/or third parties, and translation, including partial, without written authorization from Automobili Lamborghini S.p.A.

C) Disassembling the luggage compartment lock

Preliminary operations

- Disassembling the lock cover **(Point B)**.

Lock disassembly

1. Unscrew the 2 screws (**A-Fig.3**) securing the lock (**B-Fig.3**) to the chassis.
2. Disconnect the connector (**C-Fig.3**).
3. Unscrew the screw (**D-Fig.3**) securing the plate (**E-Fig.3**) to the opening cables.

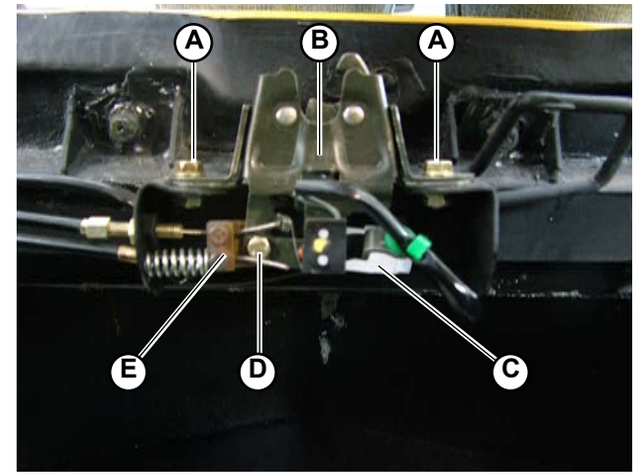

Fig.3

® Automobili Lamborghini S.p.A.
The information and procedures published below are strictly confidential and exclusively for the Lamborghini Dealer Network and Authorized Service Points. All copyrights are property of Automobili Lamborghini S.p.A based on copyright law. All of the PDF chapters in the WEB workshop manuals described below are based on information available at the time of publication. The company reserves the right to make updates and modifications. The following are prohibited: reprinting, reproduction, forwarding to unauthorized people and/or third parties, and translation, including partial, without written authorization from Automobili Lamborghini S.p.A.

D) Disassembling the front bonnet lock

1. Disassemble the lock (**A-Fig.4**) by removing the 2 fixing screws (**B-Fig.4**).
2. Disassemble the lock (**C-Fig.4**) by removing the screw (**D-Fig.4**).

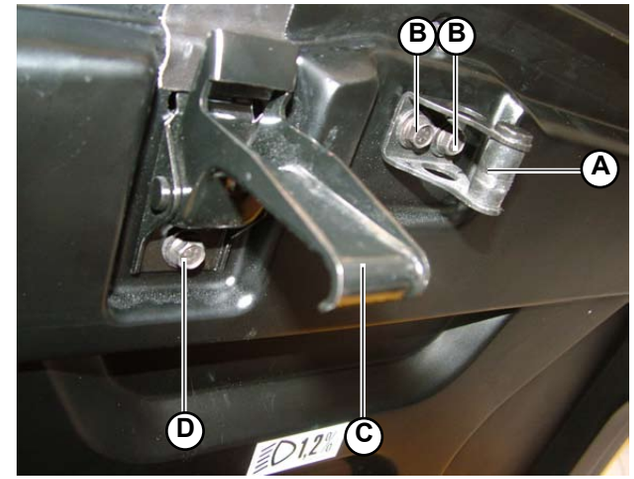

Fig.4

® Automobili Lamborghini S.p.A.
The information and procedures published below are strictly confidential and exclusively for the Lamborghini Dealer Network and Authorized Service Points. All copyrights are property of Automobili Lamborghini S.p.A based on copyright law. All of the PDF chapters in the WEB workshop manuals described below are based on information available at the time of publication. The company reserves the right to make updates and modifications. The following are prohibited: reprinting, reproduction, forwarding to unauthorized people and/or third parties, and translation, including partial, without written authorization from Automobili Lamborghini S.p.A.

E) Disassembling the interior luggage compartment lid

1. Extract the upholstery (**A-Fig.5**) from under the gasket (**B-Fig.5**) on the upper part.
2. Unscrew the 3 screws (**C-Fig.5**) securing the lid.
3. Gently pull the lid towards you and then upwards to extract.
4. Disconnect the luggage compartment light connection (**D-Fig.5**).

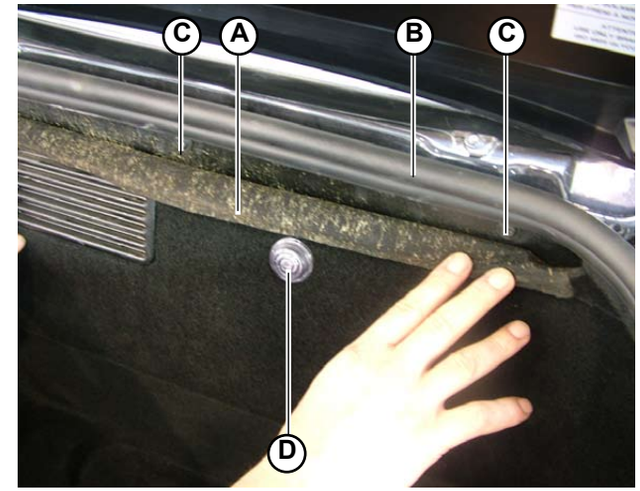

Fig.5

® Automobili Lamborghini S.p.A.
The information and procedures published below are strictly confidential and exclusively for the Lamborghini Dealer Network and Authorized Service Points. All copyrights are property of Automobili Lamborghini S.p.A based on copyright law. All of the PDF chapters in the WEB workshop manuals described below are based on information available at the time of publication. The company reserves the right to make updates and modifications. The following are prohibited: reprinting, reproduction, forwarding to unauthorized people and/or third parties, and translation, including partial, without written authorization from Automobili Lamborghini S.p.A.

F) Disassembling the front bonnet

Preliminary operations

- Disassemble the front bonnet support pistons **(Point A)**.

Bonnet disassembly

1. Detach the 2 hinges (**A-Fig.6**) from the front bonnet (**B-Fig.6**) by unscrewing the 2 fixing screws (**C-Fig.6**).
2. Remove the front bonnet.

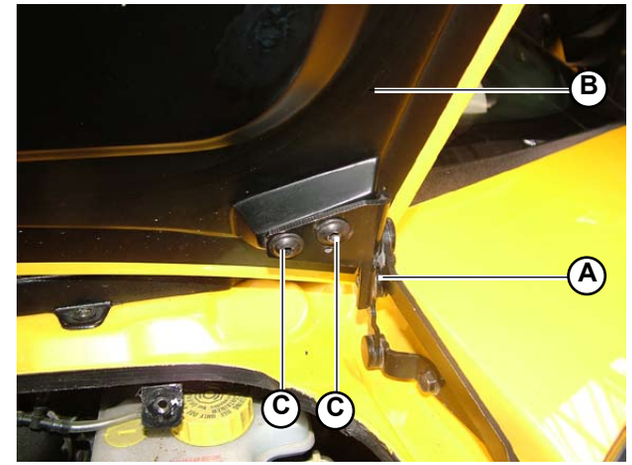

Fig.6

® Automobili Lamborghini S.p.A.
The information and procedures published below are strictly confidential and exclusively for the Lamborghini Dealer Network and Authorized Service Points. All copyrights are property of Automobili Lamborghini S.p.A based on copyright law. All of the PDF chapters in the WEB workshop manuals described below are based on information available at the time of publication. The company reserves the right to make updates and modifications. The following are prohibited: reprinting, reproduction, forwarding to unauthorized people and/or third parties, and translation, including partial, without written authorization from Automobili Lamborghini S.p.A.

G) Disassembling the interior luggage compartment grid

1. Remove the luggage compartment gasket (there is no need to remove the gasket from the entire perimeter of the luggage compartment, just detach the gasket in the area above the grid to disassemble).
2. Detach enough upholstery (**A-Fig.7**) to access the grid (**B-Fig.7**).
3. Unscrew the 2 screws (**C-Fig.7**) securing the grid.
4. Remove the grid.

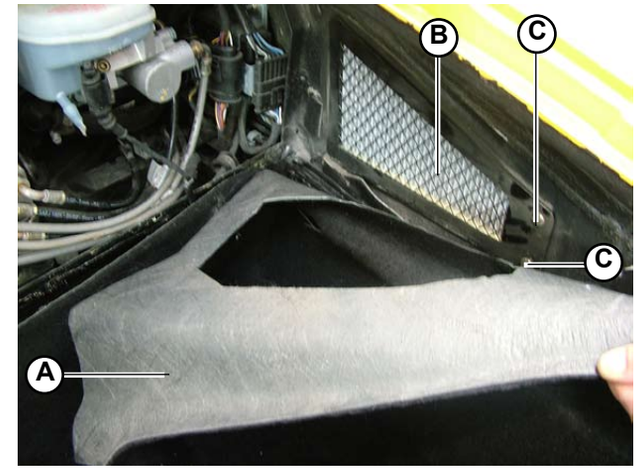

Fig.7

® Automobili Lamborghini S.p.A.
The information and procedures published below are strictly confidential and exclusively for the Lamborghini Dealer Network and Authorized Service Points. All copyrights are property of Automobili Lamborghini S.p.A based on copyright law. All of the PDF chapters in the WEB workshop manuals described below are based on information available at the time of publication. The company reserves the right to make updates and modifications. The following are prohibited: reprinting, reproduction, forwarding to unauthorized people and/or third parties, and translation, including partial, without written authorization from Automobili Lamborghini S.p.A.

H) Disassembling the bumper cover

1. Remove the luggage compartment gasket (there is no need to remove the gasket from the entire perimeter of the luggage compartment, just detach the gasket in the front area above the bumper cover).
2. Remove the shims (**A-Fig.8**) holding the cover flush against the body.
3. Manually remove the cover (**B-Fig.9**) from the butyl adhesive.

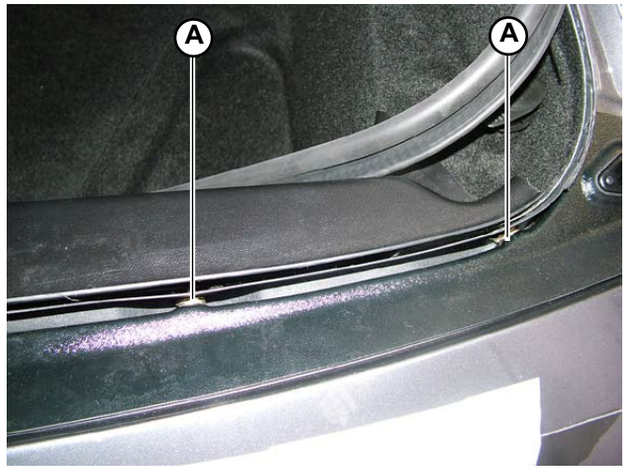

Fig.8

Fig.9

® Automobili Lamborghini S.p.A.
The information and procedures published below are strictly confidential and exclusively for the Lamborghini Dealer Network and Authorized Service Points. All copyrights are property of Automobili Lamborghini S.p.A based on copyright law. All of the PDF chapters in the WEB workshop manuals described below are based on information available at the time of publication. The company reserves the right to make updates and modifications. The following are prohibited: reprinting, reproduction, forwarding to unauthorized people and/or third parties, and translation, including partial, without written authorization from Automobili Lamborghini S.p.A.

This section explains how to assemble:

A) Front bonnet support pistons
B) Lock cover
C) Luggage compartment lock
D) Front bonnet lock
E) Interior luggage compartment lid
F) Front bonnet
G) Interior luggage compartment grid
H) Bumper cover

® Automobili Lamborghini S.p.A.
The information and procedures published below are strictly confidential and exclusively for the Lamborghini Dealer Network and Authorized Service Points. All copyrights are property of Automobili Lamborghini S.p.A based on copyright law. All of the PDF chapters in the WEB workshop manuals described below are based on information available at the time of publication. The company reserves the right to make updates and modifications. The following are prohibited: reprinting, reproduction, forwarding to unauthorized people and/or third parties, and translation, including partial, without written authorization from Automobili Lamborghini S.p.A.

A) Assembling the front bonnet support pistons

CAUTION

Never assemble the front bonnet support pistons unless another support has already been positioned in their place.

1. Install each piston by applying pressure to the ball joints (**A-Fig.1**) until they snap into the couplings on the bonnet and luggage compartment.

Fig.1

® Automobili Lamborghini S.p.A.
The information and procedures published below are strictly confidential and exclusively for the Lamborghini Dealer Network and Authorized Service Points. All copyrights are property of Automobili Lamborghini S.p.A based on copyright law. All of the PDF chapters in the WEB workshop manuals described below are based on information available at the time of publication. The company reserves the right to make updates and modifications. The following are prohibited: reprinting, reproduction, forwarding to unauthorized people and/or third parties, and translation, including partial, without written authorization from Automobili Lamborghini S.p.A.

B) Assembling the lock cover

1. Secure the lock cover (**B-Fig.2**) to the luggage compartment by tightening the 2 screws (**B-Fig.2**) (one on the right and one on the left).
2. Attach the gaskets (**C-Fig.2**) on the front part of the luggage compartment.

Fig.2

® Automobili Lamborghini S.p.A.
The information and procedures published below are strictly confidential and exclusively for the Lamborghini Dealer Network and Authorized Service Points. All copyrights are property of Automobili Lamborghini S.p.A based on copyright law. All of the PDF chapters in the WEB workshop manuals described below are based on information available at the time of publication. The company reserves the right to make updates and modifications. The following are prohibited: reprinting, reproduction, forwarding to unauthorized people and/or third parties, and translation, including partial, without written authorization from Automobili Lamborghini S.p.A.

C) Assembling the luggage compartment lock

1. Screw the lock (**A-Fig.3**) to the frame using the 2 screws (**B-Fig.3**).
2. Connect the connector (**C-Fig.3**).
3. Fix the plate (**D-Fig.3**) with the opening cables using the screw (**E-Fig.3**).

- Assemble the lock cover **(Point B)**.

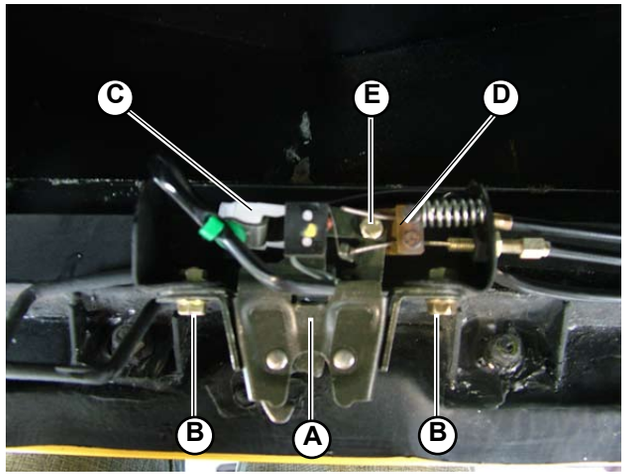

Fig.3

CAUTION

When assembly has been completed, ensure the lock functions correctly. To check the lock proceed as follows: close the luggage compartment bonnet and ensure it is perfectly closed. Act on the 'open luggage compartment' control located inside the car and try to gently lift the bonnet to ensure the safety lock functions.

® Automobili Lamborghini S.p.A.
The information and procedures published below are strictly confidential and exclusively for the Lamborghini Dealer Network and Authorized Service Points. All copyrights are property of Automobili Lamborghini S.p.A based on copyright law. All of the PDF chapters in the WEB workshop manuals described below are based on information available at the time of publication. The company reserves the right to make updates and modifications. The following are prohibited: reprinting, reproduction, forwarding to unauthorized people and/or third parties, and translation, including partial, without written authorization from Automobili Lamborghini S.p.A.

D) Assembling the front bonnet lock and safety hook.

1. Assemble the lock (**A-Fig.4**) and secure using the 2 screws (**B-Fig.4**).
2. Assemble the safety lock (**C-Fig.4**) and secure with the screw (**D-Fig.4**).

CAUTION

When assembly has been completed, ensure the lock functions correctly. To check the lock proceed as follows: close the luggage compartment bonnet and ensure it is perfectly closed. Act on the 'open luggage compartment' control located inside the car and try to gently lift the bonnet to ensure the safety lock functions.

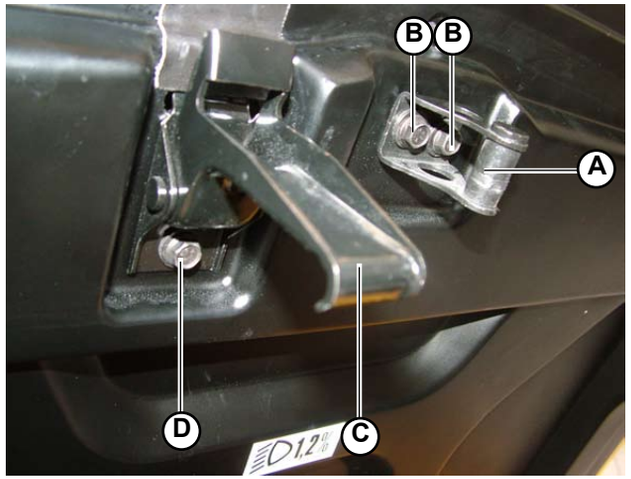

Fig.4

® Automobili Lamborghini S.p.A.
The information and procedures published below are strictly confidential and exclusively for the Lamborghini Dealer Network and Authorized Service Points. All copyrights are property of Automobili Lamborghini S.p.A based on copyright law. All of the PDF chapters in the WEB workshop manuals described below are based on information available at the time of publication. The company reserves the right to make updates and modifications. The following are prohibited: reprinting, reproduction, forwarding to unauthorized people and/or third parties, and translation, including partial, without written authorization from Automobili Lamborghini S.p.A.

E) Assembling the interior luggage compartment lid

1. Connect the luggage compartment light connection (**A-Fig.5**).
2. Position the lid inside its housing in the luggage compartment.
3. Fix the lid using the 3 screws (**B-Fig.5**).
4. Insert the upholstery (**C-Fig.5**) under the gasket (**D-Fig.5**) on the upper part.

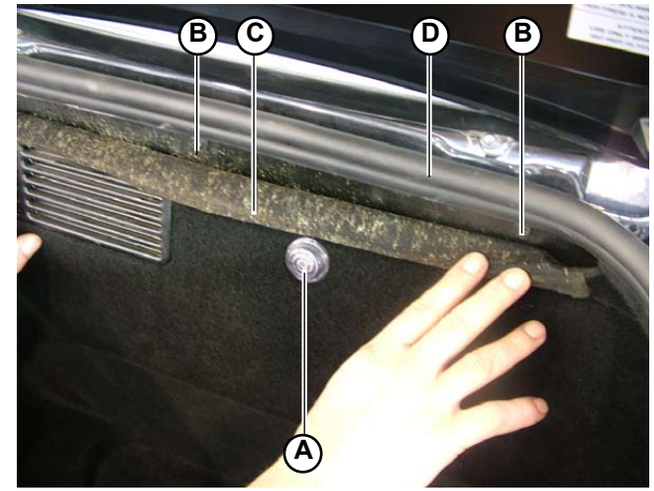

Fig.5

® Automobili Lamborghini S.p.A.
The information and procedures published below are strictly confidential and exclusively for the Lamborghini Dealer Network and Authorized Service Points. All copyrights are property of Automobili Lamborghini S.p.A based on copyright law. All of the PDF chapters in the WEB workshop manuals described below are based on information available at the time of publication. The company reserves the right to make updates and modifications. The following are prohibited: reprinting, reproduction, forwarding to unauthorized people and/or third parties, and translation, including partial, without written authorization from Automobili Lamborghini S.p.A.

F) Assembling the front bonnet

1. Secure the front bonnet (**A-Fig.6**) to the 2 hinges (**B-Fig.6**) using the 2 screws (**C-Fig.6**) (2 screws for each hinge).

- Assemble the front bonnet support pistons **(Point A)**.

Ensure the bonnet is correctly centred and that the bonnet spans are the same on the right and left, and well distributed between top and bottom. Once these adjustments have been completed, check the bonnet lock functions correctly.

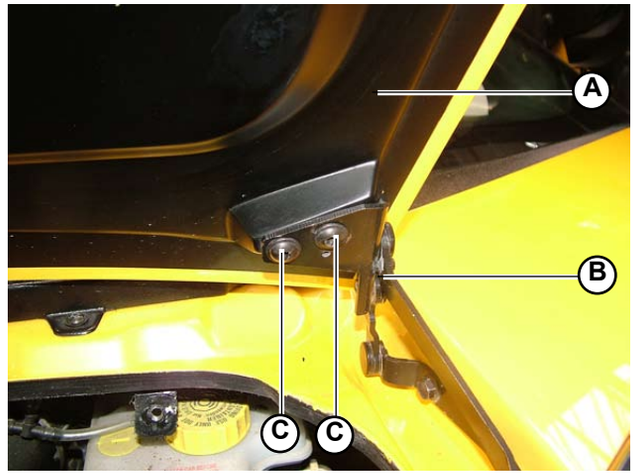

Fig.6

® Automobili Lamborghini S.p.A.
The information and procedures published below are strictly confidential and exclusively for the Lamborghini Dealer Network and Authorized Service Points. All copyrights are property of Automobili Lamborghini S.p.A based on copyright law. All of the PDF chapters in the WEB workshop manuals described below are based on information available at the time of publication. The company reserves the right to make updates and modifications. The following are prohibited: reprinting, reproduction, forwarding to unauthorized people and/or third parties, and translation, including partial, without written authorization from Automobili Lamborghini S.p.A.

G) Assembling the interior luggage compartment grid

1. Tighten the 2 screws (**A-Fig.7**) securing the grid to the luggage compartment.
2. Assemble the upholstery (**B-Fig.7**) in the luggage compartment in the area around the grid (**C-Fig.7**).
3. Assemble the luggage compartment gasket.

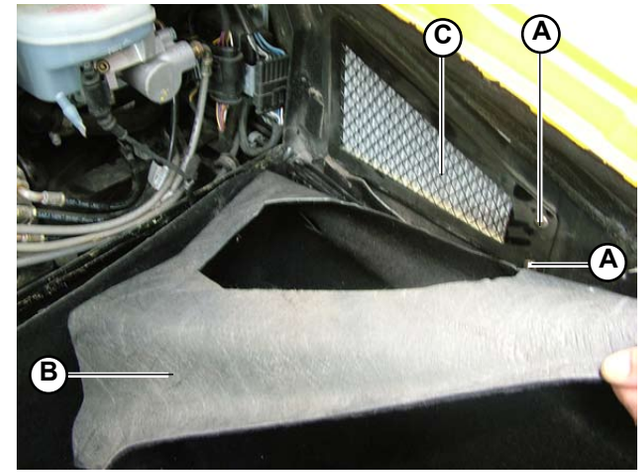

Fig.7

® Automobili Lamborghini S.p.A.
The information and procedures published below are strictly confidential and exclusively for the Lamborghini Dealer Network and Authorized Service Points. All copyrights are property of Automobili Lamborghini S.p.A based on copyright law. All of the PDF chapters in the WEB workshop manuals described below are based on information available at the time of publication. The company reserves the right to make updates and modifications. The following are prohibited: reprinting, reproduction, forwarding to unauthorized people and/or third parties, and translation, including partial, without written authorization from Automobili Lamborghini S.p.A.

H) Assembling the bumper cover

1. Position strips of butyl for fixing the bumper cover.
2. Position the cover (**A-Fig.8**) flush with the body and ensure it adheres securely to the butyl.
3. Position the shims (**B.Fig.8**) to ensure the cover is fixed securely and flush with the body.

STOP Re-position the shims removed beforehand during the disassembly procedure.

4. Assemble the gasket around the perimeter of the luggage compartment.

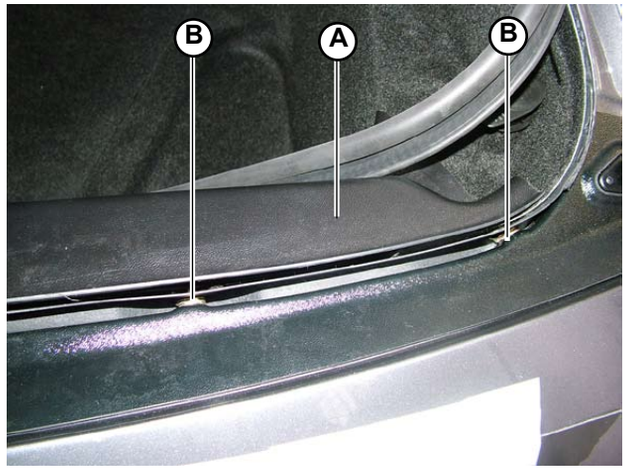

Fig.8

® Automobili Lamborghini S.p.A.
The information and procedures published below are strictly confidential and exclusively for the Lamborghini Dealer Network and Authorized Service Points. All copyrights are property of Automobili Lamborghini S.p.A based on copyright law. All of the PDF chapters in the WEB workshop manuals described below are based on information available at the time of publication. The company reserves the right to make updates and modifications. The following are prohibited: reprinting, reproduction, forwarding to unauthorized people and/or third parties, and translation, including partial, without written authorization from Automobili Lamborghini S.p.A.

This section explains how to disassemble:

A) Front bumper grids
B) Front bumper
C) Rear bumper

® Automobili Lamborghini S.p.A.
The information and procedures published below are strictly confidential and exclusively for the Lamborghini Dealer Network and Authorized Service Points. All copyrights are property of Automobili Lamborghini S.p.A based on copyright law. All of the PDF chapters in the WEB workshop manuals described below are based on information available at the time of publication. The company reserves the right to make updates and modifications. The following are prohibited: reprinting, reproduction, forwarding to unauthorized people and/or third parties, and translation, including partial, without written authorization from Automobili Lamborghini S.p.A.

A) Disassembling the front bumper grids

1. Unscrew the 4 screws (**A-Fig.1**) securing the grids (**B-Fig.1**) to the front bumper.
2. Remove the grids.

The car is equipped with two perfectly identical grids on the front bumper (one on the right and one on the left). The disassembly sequence is the same for both.

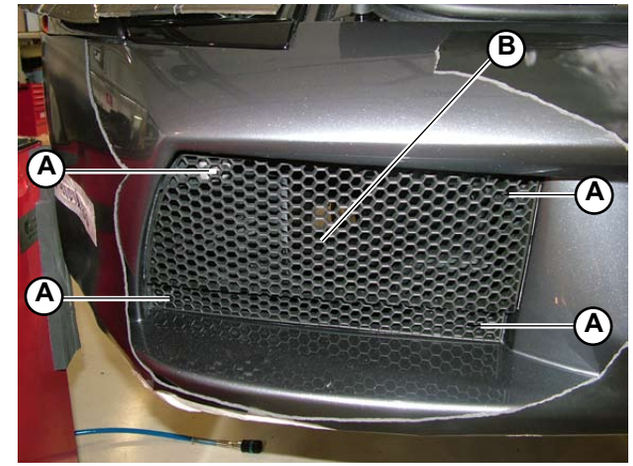

Fig.1

® Automobili Lamborghini S.p.A.
The information and procedures published below are strictly confidential and exclusively for the Lamborghini Dealer Network and Authorized Service Points. All copyrights are property of Automobili Lamborghini S.p.A based on copyright law. All of the PDF chapters in the WEB workshop manuals described below are based on information available at the time of publication. The company reserves the right to make updates and modifications. The following are prohibited: reprinting, reproduction, forwarding to unauthorized people and/or third parties, and translation, including partial, without written authorization from Automobili Lamborghini S.p.A.

B) Disassembling the front bumper

Preliminary operations

- Disassemble the lock cover **(080603)**.
- Disassemble the bumper cover **(080603)**.
- Raise the car on the car lift **(000000).**
- Remove the 2 front wheels **(060103).**
- Remove the front and central elements of the two wheel arch assemblies **(082103)**.
- Remove the 2 headlamp assemblies **(094103)**.

Front bumper disassembly

1. From the headlamp compartment, access and remove the clips connecting the body to the front bumper on the sides of the car.
2. Disconnect the 2 brake cooling pipes on the two front wheels (1 pipe for each wheel).
3. Detach the front bumper from the chassis by unscrewing the 6 connecting screws (**A-Fig.2**) (3 screws on the right and 3 screws on the left).
4. Extract the front bumper.

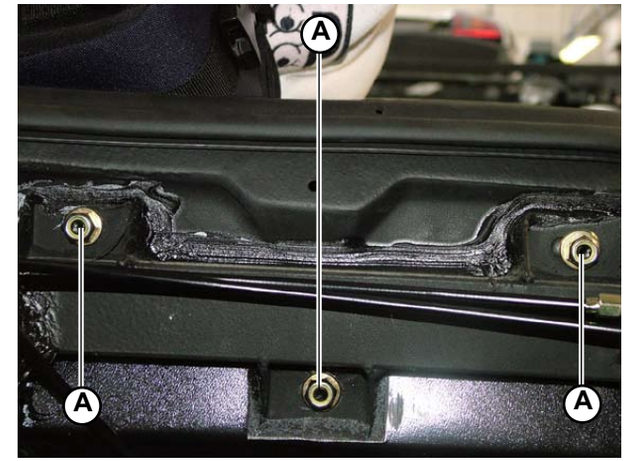

Fig.2

® Automobili Lamborghini S.p.A.
The information and procedures published below are strictly confidential and exclusively for the Lamborghini Dealer Network and Authorized Service Points. All copyrights are property of Automobili Lamborghini S.p.A based on copyright law. All of the PDF chapters in the WEB workshop manuals described below are based on information available at the time of publication. The company reserves the right to make updates and modifications. The following are prohibited: reprinting, reproduction, forwarding to unauthorized people and/or third parties, and translation, including partial, without written authorization from Automobili Lamborghini S.p.A.

C) Disassembling the rear bumper

Preliminary operations

- Raise the car on the car lift **(000000)**.
- Remove the 2 rear wheels **(081603)**.
- Disassemble the rear wheel arch elements **(082103)**.
- Remove the rear side grids **(081303)**.
- Remove the central rear grid **(081303)**.
- Remove the exhaust terminals **(025103)**.

Bumper disassembly

1. Disconnect the plastic panels (**A-Fig.3**) from the chassis by unscrewing the fixing screws (**B-Fig.3**) (one screw for each panel).
2. From the rear wheel arch element compartment, access and unscrew the 4 screws (**C-Fig.4**) connecting the rear bumper to the body on either side (2 screws for each side of the car).
3. Unscrew the 4 screws (**D-Fig.5**) securing the 2 bumper brackets (**E-Fig.5**) to the chassis (2 screws for each bracket).

STOP **Do not touch the screws (F-Fig.5) which adjust the thickness of the 4 buffers (G-Fig.5) on the rear bumper.**

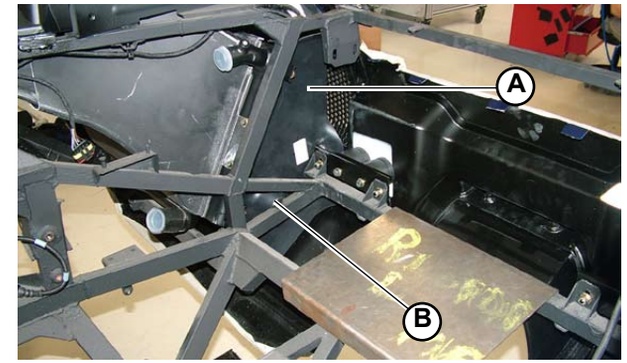

Fig.3

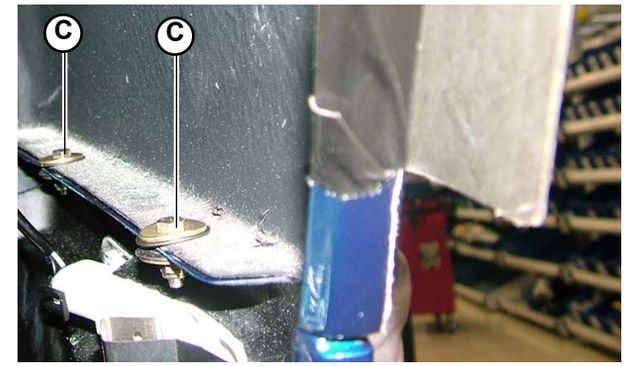

Fig.4

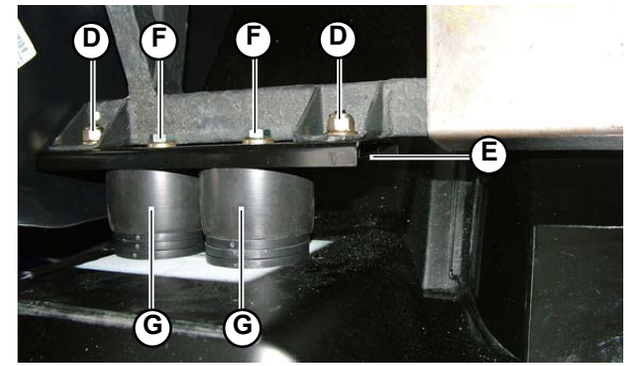

Fig.5

® Automobili Lamborghini S.p.A.
The information and procedures published below are strictly confidential and exclusively for the Lamborghini Dealer Network and Authorized Service Points. All copyrights are property of Automobili Lamborghini S.p.A based on copyright law. All of the PDF chapters in the WEB workshop manuals described below are based on information available at the time of publication. The company reserves the right to make updates and modifications. The following are prohibited: reprinting, reproduction, forwarding to unauthorized people and/or third parties, and translation, including partial, without written authorization from Automobili Lamborghini S.p.A.

This section explains how to assemble:

A) Front bumper grids
B) Front bumper
C) Rear bumper

® Automobili Lamborghini S.p.A.
The information and procedures published below are strictly confidential and exclusively for the Lamborghini Dealer Network and Authorized Service Points. All copyrights are property of Automobili Lamborghini S.p.A based on copyright law. All of the PDF chapters in the WEB workshop manuals described below are based on information available at the time of publication. The company reserves the right to make updates and modifications. The following are prohibited: reprinting, reproduction, forwarding to unauthorized people and/or third parties, and translation, including partial, without written authorization from Automobili Lamborghini S.p.A.

A) Assembling the front bumper grids

1. Secure the grids (**A-Fig.1**) to the front bumper using the 4 screws (**B-Fig.1**).

The car is equipped with 2 perfectly identical grids on the front bumper (one on the right and one on the left). The assembly sequence is the same for both.

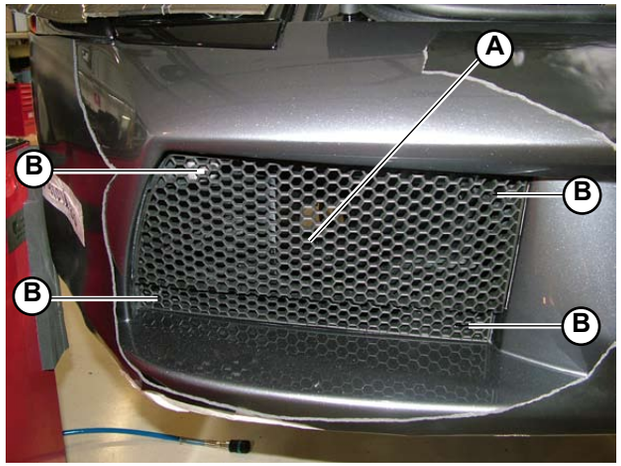

Fig.1

® Automobili Lamborghini S.p.A.
The information and procedures published below are strictly confidential and exclusively for the Lamborghini Dealer Network and Authorized Service Points. All copyrights are property of Automobili Lamborghini S.p.A based on copyright law. All of the PDF chapters in the WEB workshop manuals described below are based on information available at the time of publication. The company reserves the right to make updates and modifications. The following are prohibited: reprinting, reproduction, forwarding to unauthorized people and/or third parties, and translation, including partial, without written authorization from Automobili Lamborghini S.p.A.

B) Assembling the front bumper

1. Position the front bumper.
2. Connect the front bumper to the chassis using the 6 screws (**A-Fig.2**) (3 screws on the right and 3 screws on the left).
3. Connect the 2 brake cooling pipes to the two front wheels (1 pipe for each wheel).
4. From the headlamp compartment, access and connect the body to the front bumper on the sides of the car using the clips.

- Assemble the 2 headlamp assemblies **(094105)**.
- Assemble the front and central elements of the two wheel arch assemblies **(082105)**.
- Assemble the 2 front wheels **(060105).**
- Assemble the bumper cover **(080605)**.
- Assemble the lock cover **(080605)**.

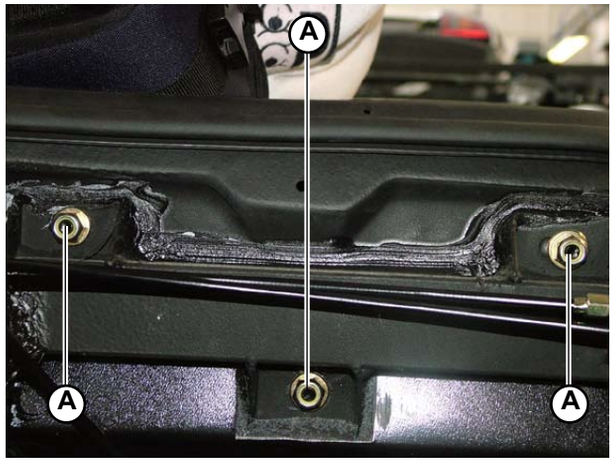

Fig.2

® Automobili Lamborghini S.p.A.
The information and procedures published below are strictly confidential and exclusively for the Lamborghini Dealer Network and Authorized Service Points. All copyrights are property of Automobili Lamborghini S.p.A based on copyright law. All of the PDF chapters in the WEB workshop manuals described below are based on information available at the time of publication. The company reserves the right to make updates and modifications. The following are prohibited: reprinting, reproduction, forwarding to unauthorized people and/or third parties, and translation, including partial, without written authorization from Automobili Lamborghini S.p.A.

C) Assembling the rear bumper

1. Connect the rear bumper to the chassis by acting on the 4 screws (**A-Fig.3**) securing the 2 brackets (**B-Fig.3**).

STOP **Do not touch the screws (C-Fig. 3) which adjust the thickness of the 4 buffers (D-Fig 3) on the rear bumper.**

2. From the rear wheel arch element compartment, access and tighten the 4 screws (**E-Fig.4**) connecting the rear bumper to the body on either side (2 screws for each side of the car).
3. Fix the plastic panels (**F-Fig.5**) to the chassis by acting on the screws (**G-Fig.5**) (one screw per panel).

- Assemble the rear central grid **(081305)**.
- Assemble the rear side grids **(081305)**.
- Assemble the rear wheel arch elements **(082105)**.
- Assemble the 2 rear wheels **(081605).**
- Assemble the exhaust terminals **(025105)**.

When reassembling the exhaust terminals, ensure they are correctly centred with the rear bumper.

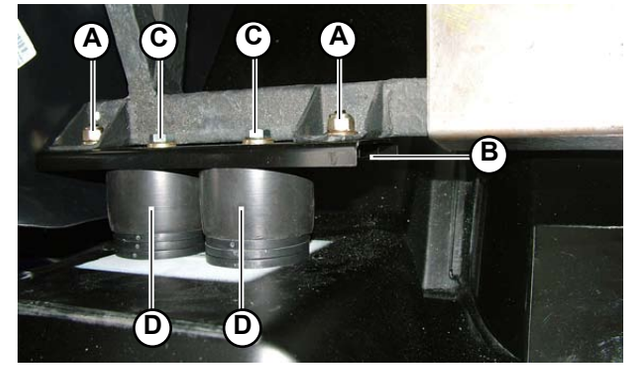

Fig.3

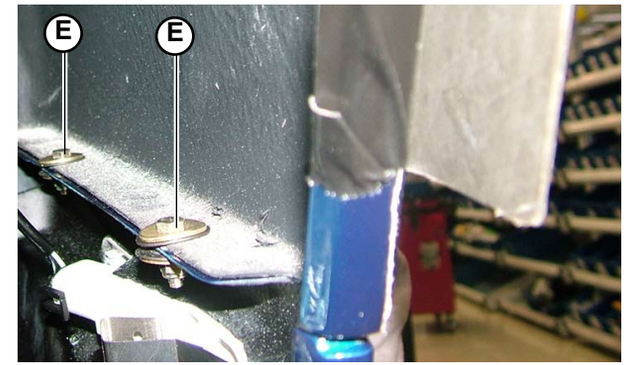

Fig.4

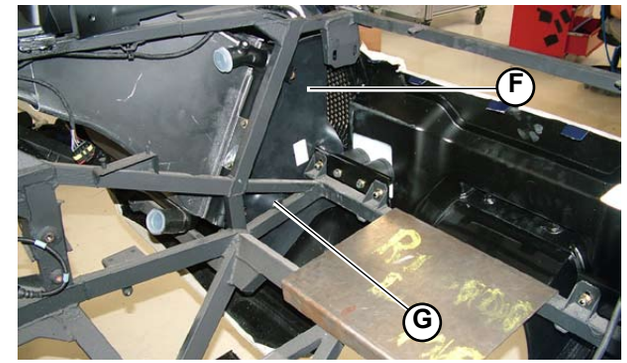

Fig.5

® Automobili Lamborghini S.p.A.
The information and procedures published below are strictly confidential and exclusively for the Lamborghini Dealer Network and Authorized Service Points. All copyrights are property of Automobili Lamborghini S.p.A based on copyright law. All of the PDF chapters in the WEB workshop manuals described below are based on information available at the time of publication. The company reserves the right to make updates and modifications. The following are prohibited: reprinting, reproduction, forwarding to unauthorized people and/or third parties, and translation, including partial, without written authorization from Automobili Lamborghini S.p.A.

Variable air vent system

In the vehicle rear side, two air vents with variable opening section cool the engine. Under some conditions the system allows a greater air flow and improves the engine cooling.

The system consists of:
- Two air vents controlled by an electrical stepping motor;
- PMC engine control unit behind the driver's seat;
- A manual control to activate the system under certain conditions;
- A warning light on the dashboard.

Variable air vent system	
A.	Mobile air vent
B.	PMC control unit
C.	Stepping motor

This system can be activated manually using the control on the console and automatically through the LDAS-32 software (109114), resetting and moving individual elements.

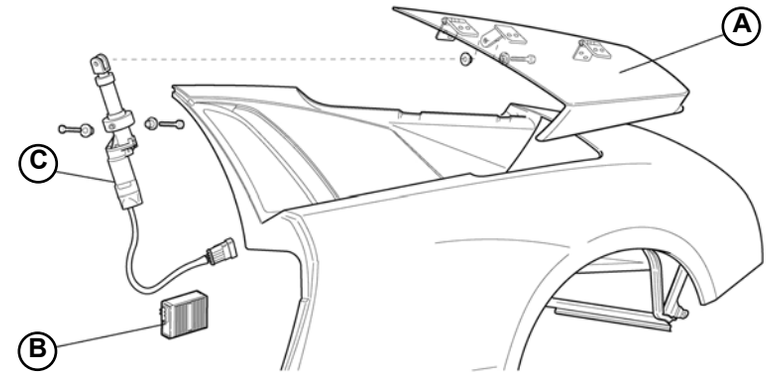

Fig.1

® Automobili Lamborghini S.p.A.
The information and procedures published below are strictly confidential and exclusively for the Lamborghini Dealer Network and Authorized Service Points. All copyrights are property of Automobili Lamborghini S.p.A based on copyright law. All of the PDF chapters in the WEB workshop manuals described below are based on information available at the time of publication. The company reserves the right to make updates and modifications. The following are prohibited: reprinting, reproduction, forwarding to unauthorized people and/or third parties, and translation, including partial, without written authorization from Automobili Lamborghini S.p.A.

The PCM control unit receives, through the CAN line, from LIE and GFA control units, information concerning the following parameters:

- Engine coolant temperature ;
- Ambient temperature;
- Vehicle speed.

The air vent condition according to these parameters is the following:

Engine Coolant temperature (°C)	Ambient Air temperature (°C)	Speed (km/h)	Air vent condition
T<65	T<30	V<180	CLOSED
T<65	30<T<38	V<180	CLOSED
T<65	T>38	V<180	CLOSED
65<T<98	T<30	V<180	CLOSED
65<T<98	30<T<38	V<180	OPENED
65<T<98	T>38	V<180	OPENED
T>98	T<30	V<180	OPENED
T>98	30<T<38	V<180	OPENED
T>98	T>38	V<180	OPENED

The values stated may vary

With vehicle speed above 180 km/h, the air vents keep the same condition as the moment in which the speed limit is exceeded (if they were open they stay open and vice versa).
If the air vents are moving (opening or closing) when the speed limit is exceeded, they are forced to open.
The adjustment push-button is active up to 50 km/h: The system logic operates according to engine conditions: If the air vents are open because of too high engine or outside air temperature, they cannot be closed by means of the push-button.
Hysteresis on coolant temperature: 5 °C when closing.
Hysteresis on outside air temperature: 3 °C when closing.

The opening is disabled for 30 sec. after the start.

® Automobili Lamborghini S.p.A.
The information and procedures published below are strictly confidential and exclusively for the Lamborghini Dealer Network and Authorized Service Points. All copyrights are property of Automobili Lamborghini S.p.A based on copyright law. All of the PDF chapters in the WEB workshop manuals described below are based on information available at the time of publication. The company reserves the right to make updates and modifications. The following are prohibited: reprinting, reproduction, forwarding to unauthorized people and/or third parties, and translation, including partial, without written authorization from Automobili Lamborghini S.p.A.

Disassembling the VACS side spoilers

Preliminary operations

- Remove the side panels in the engine compartment **(081303)**.

Disassembling the spoilers

1. Open the engine hood and unscrew the screws (**A-Fig.1**) securing the hinges of the VACS side spoilers (**B-Fig.2**).
2. Extract the journal (**C-Fig.1**).
3. Remove the VACS side spoiler.

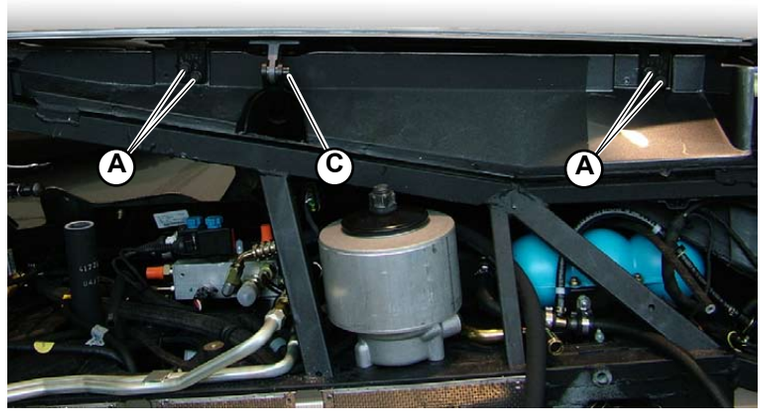

Fig.1

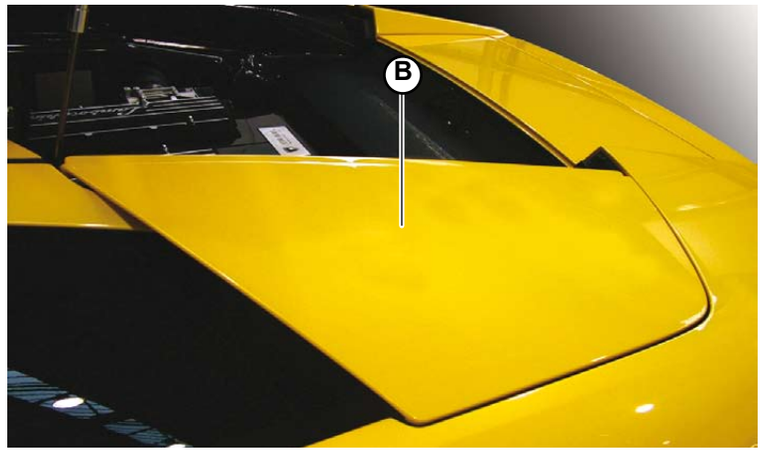

Fig.2

® Automobili Lamborghini S.p.A.
The information and procedures published below are strictly confidential and exclusively for the Lamborghini Dealer Network and Authorized Service Points. All copyrights are property of Automobili Lamborghini S.p.A based on copyright law. All of the PDF chapters in the WEB workshop manuals described below are based on information available at the time of publication. The company reserves the right to make updates and modifications. The following are prohibited: reprinting, reproduction, forwarding to unauthorized people and/or third parties, and translation, including partial, without written authorization from Automobili Lamborghini S.p.A.

Assembling the VACS side spoilers

1. Position the VACS side spoiler (**A-Fig.1**) and secure using the journal (**B-Fig.2**).
2. Secure the 2 hinges using the screws (**C-Fig.2**).

- Assemble the side panels in the engine compartment **(081305)**.

NOTE
When adjusting the air inlets, apply a “weak” thread stop (**D-Fig.3**) to the puffers (**E-Fig.3**). DO NOT align the air intakes with the fender by acting on the puffers UNTIL THIS PROCEDURE HAS BEEN CARRIED OUT. Once the necessary adjustments have been completed, tighten the puffer locking nut.

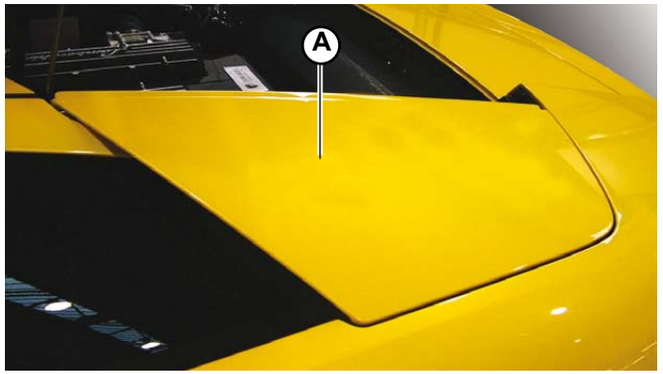

Fig.1

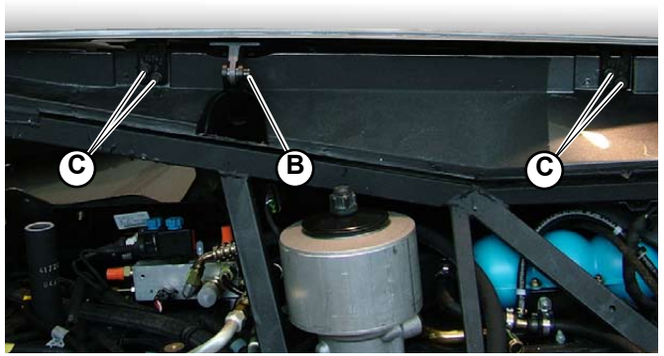

Fig.2

Fig.3

® Automobili Lamborghini S.p.A.
The information and procedures published below are strictly confidential and exclusively for the Lamborghini Dealer Network and Authorized Service Points. All copyrights are property of Automobili Lamborghini S.p.A based on copyright law. All of the PDF chapters in the WEB workshop manuals described below are based on information available at the time of publication. The company reserves the right to make updates and modifications. The following are prohibited: reprinting, reproduction, forwarding to unauthorized people and/or third parties, and translation, including partial, without written authorization from Automobili Lamborghini S.p.A.

External rear view mirror disassembly

Preliminary operations

- Disassemble the door triangle **(086803)**.

View mirror disassembly

1. Disconnect the external rear view mirror connection (**A-Fig.1**).
2. Unscrew the 3 screws (**B-Fig.2**) securing the external rear view mirror to the door.
3. Remove the external rear view mirror (**C-Fig.2**) by releasing the 2 guides (**D-Fig.3**) at the top from their couplings.

The car is equipped with 2 external rear view mirrors (one on the right and one on the left). The disassembly sequence is the same for both.

Fig.1

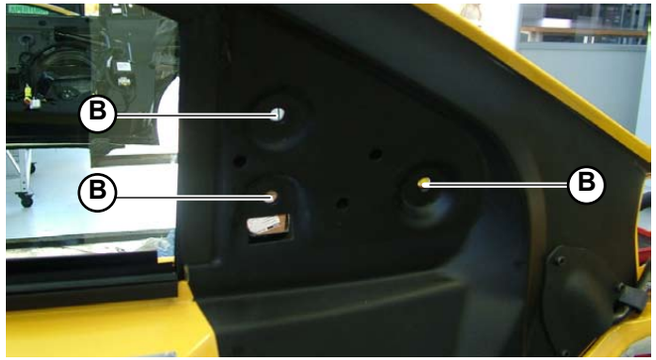

Fig.2

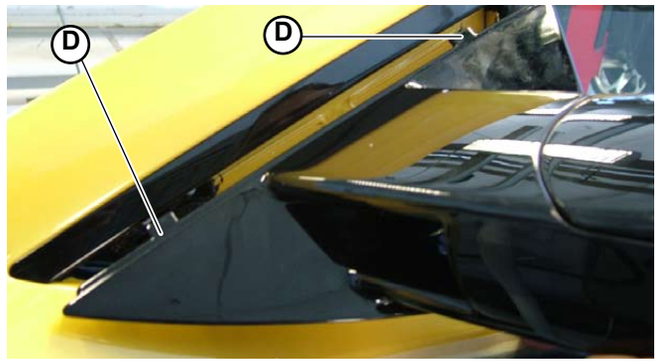

Fig.3

® Automobili Lamborghini S.p.A.
The information and procedures published below are strictly confidential and exclusively for the Lamborghini Dealer Network and Authorized Service Points. All copyrights are property of Automobili Lamborghini S.p.A based on copyright law. All of the PDF chapters in the WEB workshop manuals described below are based on information available at the time of publication. The company reserves the right to make updates and modifications. The following are prohibited: reprinting, reproduction, forwarding to unauthorized people and/or third parties, and translation, including partial, without written authorization from Automobili Lamborghini S.p.A.

External rear view mirror assembly

1. Position the external rear view mirror (**A-Fig.1**), inserting the 2 guides (**B-Fig.2**) at the top into their couplings, and secure to the door using the 3 screws (**C-Fig.3**).
2. Connect the external rear view mirror connection (**D-Fig.1**).

- Assemble the door triangle **(086805)**.

The car is equipped with 2 external rear view mirrors (one on the right and one on the left). The assembly sequence is the same for both.

Fig.1

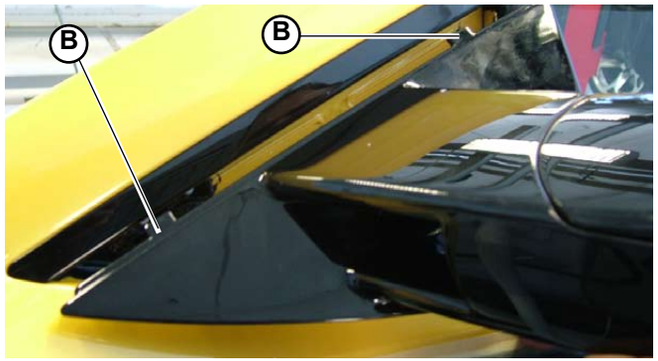

Fig.2

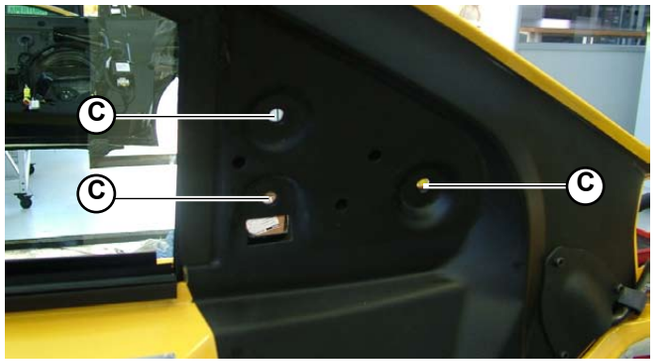

Fig.3

® Automobili Lamborghini S.p.A.
The information and procedures published below are strictly confidential and exclusively for the Lamborghini Dealer Network and Authorized Service Points. All copyrights are property of Automobili Lamborghini S.p.A based on copyright law. All of the PDF chapters in the WEB workshop manuals described below are based on information available at the time of publication. The company reserves the right to make updates and modifications. The following are prohibited: reprinting, reproduction, forwarding to unauthorized people and/or third parties, and translation, including partial, without written authorization from Automobili Lamborghini S.p.A.

This section explains how to disassemble:

A) Rear central grid
B) Rear side grids
C) Engine compartment side panels made of carbon.
D) Petrol flap
E) Fender cover
F) Engine safety cover

® Automobili Lamborghini S.p.A.
The information and procedures published below are strictly confidential and exclusively for the Lamborghini Dealer Network and Authorized Service Points. All copyrights are property of Automobili Lamborghini S.p.A based on copyright law. All of the PDF chapters in the WEB workshop manuals described below are based on information available at the time of publication. The company reserves the right to make updates and modifications. The following are prohibited: reprinting, reproduction, forwarding to unauthorized people and/or third parties, and translation, including partial, without written authorization from Automobili Lamborghini S.p.A.

A) Disassembling the rear central grid

1. Unscrew the 6 screws (**A-Fig.1**) securing the rear central grid (**B-Fig.1**) to the body.
2. Disconnect the 2 number plate lights by unscrewing the 4 screws securing them to the grid (2 screws for each light).
3. Remove the rear central grid.

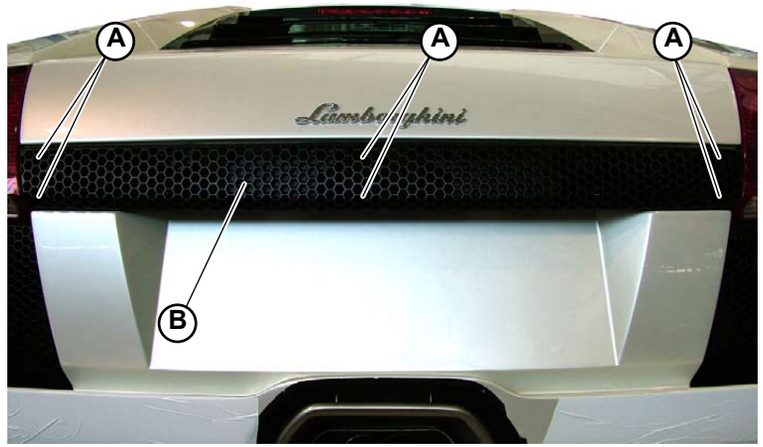

Fig.1

® Automobili Lamborghini S.p.A.
The information and procedures published below are strictly confidential and exclusively for the Lamborghini Dealer Network and Authorized Service Points. All copyrights are property of Automobili Lamborghini S.p.A based on copyright law. All of the PDF chapters in the WEB workshop manuals described below are based on information available at the time of publication. The company reserves the right to make updates and modifications. The following are prohibited: reprinting, reproduction, forwarding to unauthorized people and/or third parties, and translation, including partial, without written authorization from Automobili Lamborghini S.p.A.

B) Disassembling the rear side grids

1. Unscrew the 4 screws (**A-Fig.2**) securing the rear side grids (**B-Fig.2**) to the body.
2. Remove the 2 grids.

The car is equipped with 2 perfectly identical grids on the rear bumper (one on the right and one on the left). The disassembly sequence is the same for both.

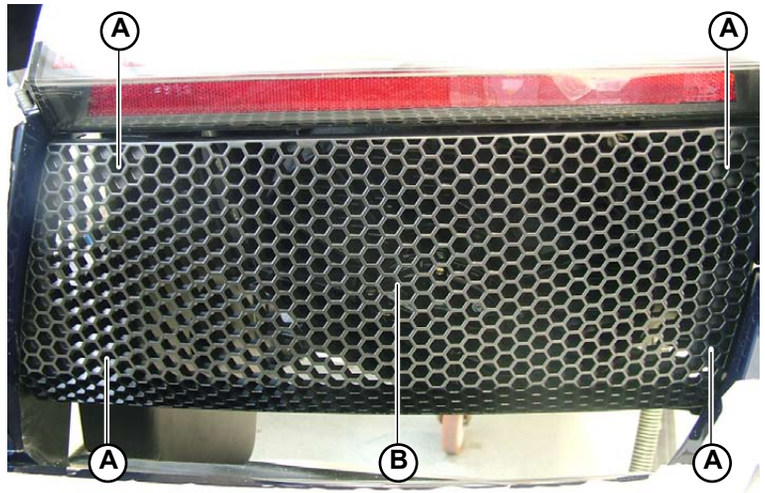

Fig.2

® Automobili Lamborghini S.p.A.
The information and procedures published below are strictly confidential and exclusively for the Lamborghini Dealer Network and Authorized Service Points. All copyrights are property of Automobili Lamborghini S.p.A based on copyright law. All of the PDF chapters in the WEB workshop manuals described below are based on information available at the time of publication. The company reserves the right to make updates and modifications. The following are prohibited: reprinting, reproduction, forwarding to unauthorized people and/or third parties, and translation, including partial, without written authorization from Automobili Lamborghini S.p.A.

C) Disassembling the engine compartment side panels made of carbon.

Preliminary operations (valid for both the left and right side panels)

- Disassemble the 2 rear hood support pistons **(082703)**.
- Remove the silencer safety grid **(025103)**.

Left side panel

1. Unscrew the 4 top screws (**A-Fig.3**).
2. Detach the knob (**B-Fig.3**) by unscrewing the central screw (**C-Fig.3**).
3. Extract the panel by removing from the lower locking clips.

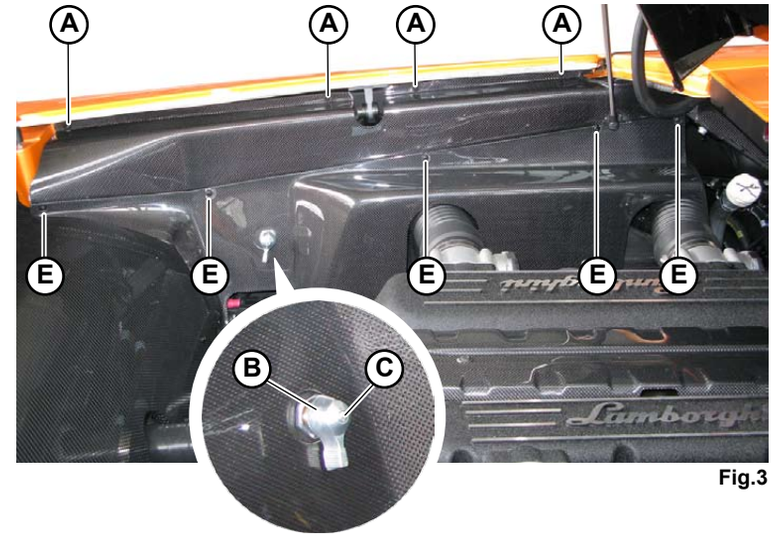

Fig.3

Right side panel

1. Unscrew the 4 top screws (**D-Fig.4**).
2. Extract the panel by removing from the lower locking clips.

Each of the 2 side panels is divided into two parts: an upper part and a lower part connected to each other with 4 screws (E-Fig.3/4).

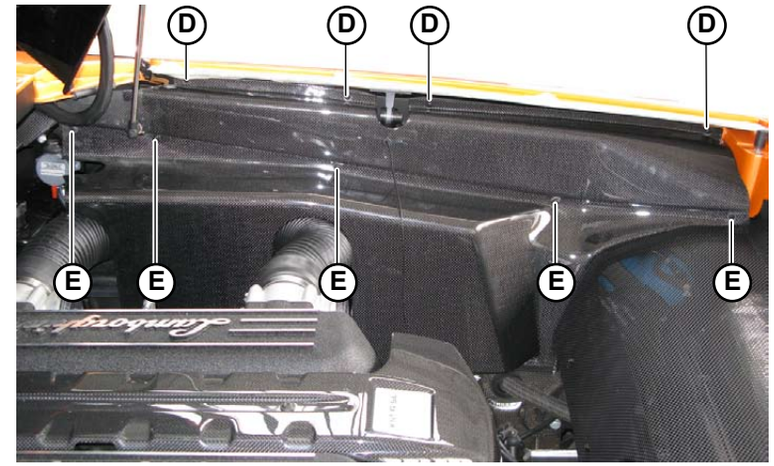

Fig.4

® Automobili Lamborghini S.p.A.
The information and procedures published below are strictly confidential and exclusively for the Lamborghini Dealer Network and Authorized Service Points. All copyrights are property of Automobili Lamborghini S.p.A based on copyright law. All of the PDF chapters in the WEB workshop manuals described below are based on information available at the time of publication. The company reserves the right to make updates and modifications. The following are prohibited: reprinting, reproduction, forwarding to unauthorized people and/or third parties, and translation, including partial, without written authorization from Automobili Lamborghini S.p.A.

D) Disassembling the petrol filler, flap and petrol filler locking motor.

Preliminary operations

- Remove the silencer safety grid **(025103)**.
- Remove the right side panel in the engine compartment **(Point C)**.
- Remove the intake air filter assembly **(013303)**.

Petrol filler disassembly

1. Disconnect the pipe connecting the fuel tank to the filler (**A-Fig.5**).
2. To disassemble the flap, unscrew the 2 screws (**B-Fig.6**).
3. To disassemble the actuator, unscrew the 2 screws (**C-Fig.5**).
4. To disassemble the filler, unscrew the 4 screws (**D-Fig.5**) and remove the gasket (**E-Fig.5**).

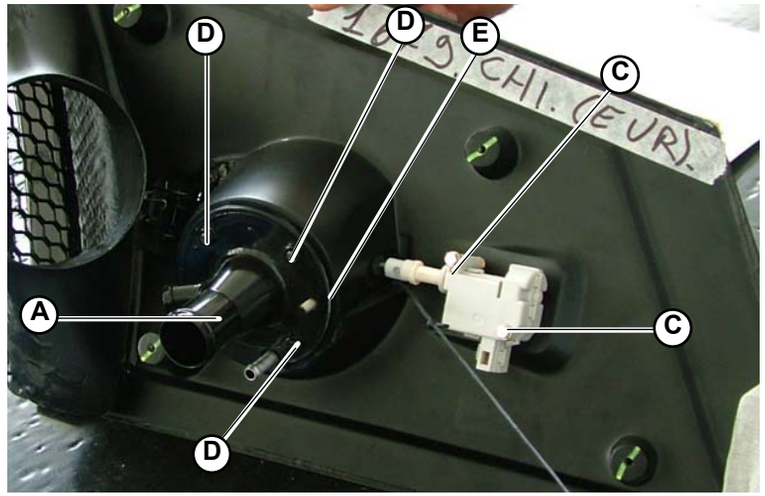

Fig.5

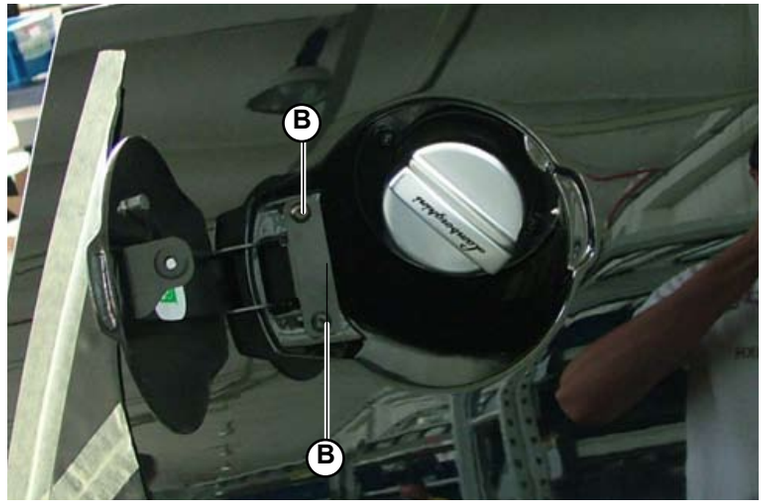

Fig.6

® Automobili Lamborghini S.p.A.
The information and procedures published below are strictly confidential and exclusively for the Lamborghini Dealer Network and Authorized Service Points. All copyrights are property of Automobili Lamborghini S.p.A based on copyright law. All of the PDF chapters in the WEB workshop manuals described below are based on information available at the time of publication. The company reserves the right to make updates and modifications. The following are prohibited: reprinting, reproduction, forwarding to unauthorized people and/or third parties, and translation, including partial, without written authorization from Automobili Lamborghini S.p.A.

E) Disassembling the fender cover

Preliminary operations

- Remove the silencer safety grid **(025103)**.
- Remove the right side panel in the engine compartment **(Point C)**.
- Remove the intake air filter assembly **(013303)**.

Cover disassembly

1. Disconnect the pipe connecting the fuel tank to the filler (**A-Fig.7**) (for right fender cover only).
2. Disassemble the cover by unscrewing the 4 nuts (**B-Fig.7**) securing the cover to the body.
3. Remove the cover (**C-Fig.7**).

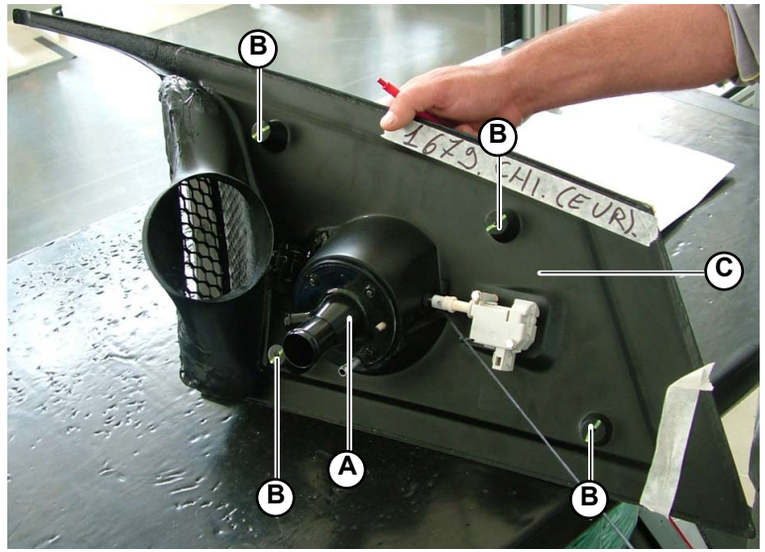

Fig.7

® Automobili Lamborghini S.p.A.
The information and procedures published below are strictly confidential and exclusively for the Lamborghini Dealer Network and Authorized Service Points. All copyrights are property of Automobili Lamborghini S.p.A based on copyright law. All of the PDF chapters in the WEB workshop manuals described below are based on information available at the time of publication. The company reserves the right to make updates and modifications. The following are prohibited: reprinting, reproduction, forwarding to unauthorized people and/or third parties, and translation, including partial, without written authorization from Automobili Lamborghini S.p.A.

F) Disassembling the engine safety cover

1. Unscrew the 4 screws (**A-Fig.8**) securing the rear engine safety cover (**B-Fig.8**).
2. Remove the cover.

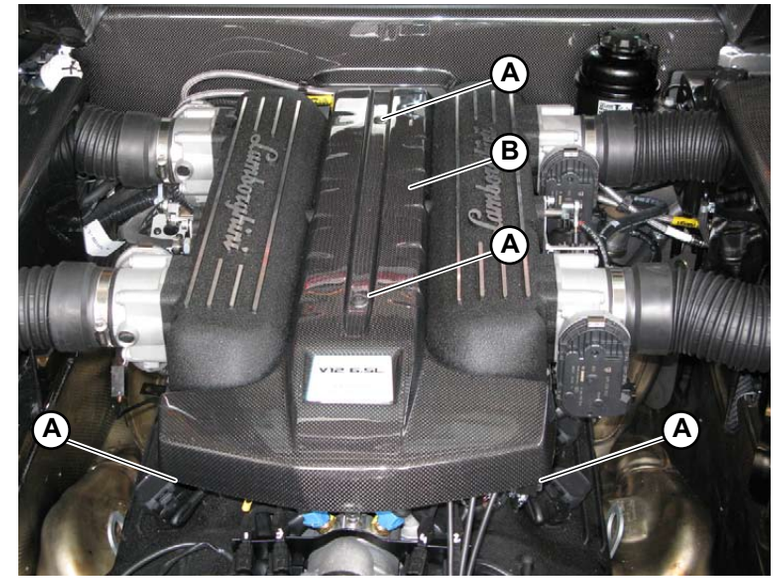

Fig.8

® Automobili Lamborghini S.p.A.
The information and procedures published below are strictly confidential and exclusively for the Lamborghini Dealer Network and Authorized Service Points. All copyrights are property of Automobili Lamborghini S.p.A based on copyright law. All of the PDF chapters in the WEB workshop manuals described below are based on information available at the time of publication. The company reserves the right to make updates and modifications. The following are prohibited: reprinting, reproduction, forwarding to unauthorized people and/or third parties, and translation, including partial, without written authorization from Automobili Lamborghini S.p.A.

This section explains how to assemble:

A) Rear central grid
B) Rear side grids
C) Carbon side panels in the engine compartment.
D) Petrol flap
E) Fender cover
F) Engine safety cover

® Automobili Lamborghini S.p.A.
The information and procedures published below are strictly confidential and exclusively for the Lamborghini Dealer Network and Authorized Service Points. All copyrights are property of Automobili Lamborghini S.p.A based on copyright law. All of the PDF chapters in the WEB workshop manuals described below are based on information available at the time of publication. The company reserves the right to make updates and modifications. The following are prohibited: reprinting, reproduction, forwarding to unauthorized people and/or third parties, and translation, including partial, without written authorization from Automobili Lamborghini S.p.A.

A) Assembling the rear central grid

1. Connect the 2 number plate lights using the 4 screws to secure them to the grid (2 screws for each light).
2. Position the central grid (**A-Fig.1**) under the engine hood and fix using the 6 screws (**B-Fig.1**).

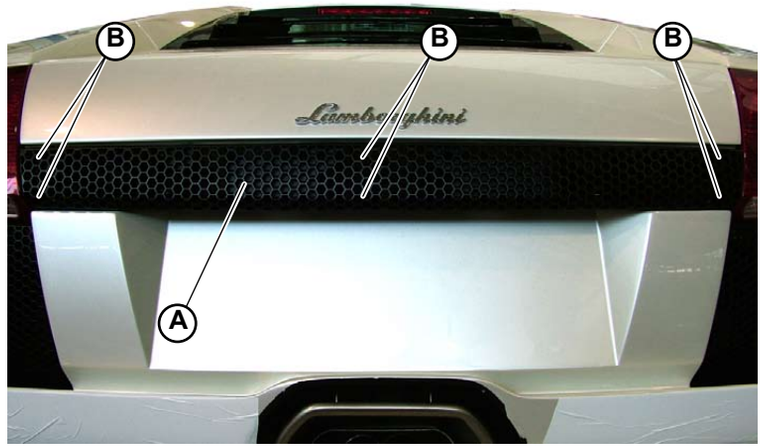

Fig.1

® Automobili Lamborghini S.p.A.
The information and procedures published below are strictly confidential and exclusively for the Lamborghini Dealer Network and Authorized Service Points. All copyrights are property of Automobili Lamborghini S.p.A based on copyright law. All of the PDF chapters in the WEB workshop manuals described below are based on information available at the time of publication. The company reserves the right to make updates and modifications. The following are prohibited: reprinting, reproduction, forwarding to unauthorized people and/or third parties, and translation, including partial, without written authorization from Automobili Lamborghini S.p.A.

B) Assembling the rear side grids

1. Secure the rear side grids (**A-Fig.2**) to the body using the 4 screws (**B-Fig.2**).

The car is equipped with 2 perfectly identical grids on the rear bumper (one on the right and one on the left). The assembly sequence is the same for both.

Fig.2

® Automobili Lamborghini S.p.A.
The information and procedures published below are strictly confidential and exclusively for the Lamborghini Dealer Network and Authorized Service Points. All copyrights are property of Automobili Lamborghini S.p.A based on copyright law. All of the PDF chapters in the WEB workshop manuals described below are based on information available at the time of publication. The company reserves the right to make updates and modifications. The following are prohibited: reprinting, reproduction, forwarding to unauthorized people and/or third parties, and translation, including partial, without written authorization from Automobili Lamborghini S.p.A.

C) Assembling the carbon side panels in the engine compartment.

Each of the 2 side panels is divided into two parts that must be pre-assembled: an upper part and a lower part connected to each other with 4 screws (A-Fig.3/4).

Left side panel

1. Insert the lower part of the panel in the locking clips.
2. Tighten the 4 top screws (**B-Fig.3**).
3. Secure the knob (**C-Fig.3**) by tightening the central screw (**D-Fig.3**).

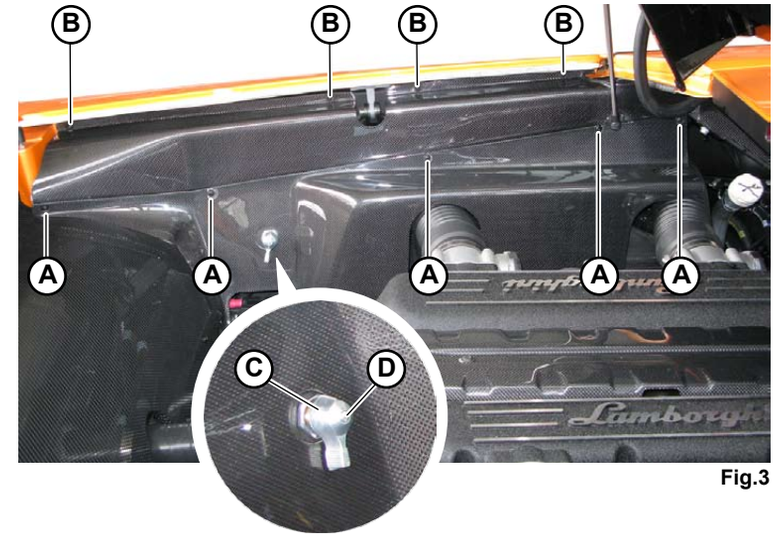

Fig.3

Right side panel

1. Insert the lower part of the panel in the locking clips.
2. Tighten the 4 top screws (**E-Fig.4**).

- Assemble the 2 engine hood support pistons **(082705) (This procedure is the same for the left and right side panel).**
- Assemble the silencer safety grid **(025105) (This procedure is the same for the left and right side panel).**

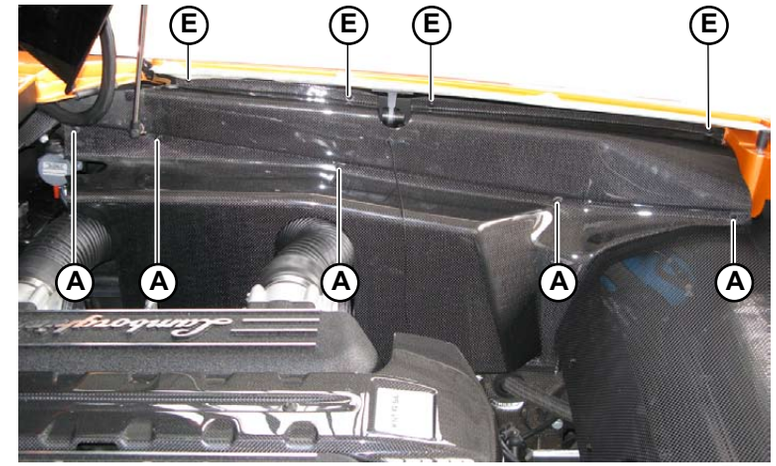

Fig.4

® Automobili Lamborghini S.p.A.
The information and procedures published below are strictly confidential and exclusively for the Lamborghini Dealer Network and Authorized Service Points. All copyrights are property of Automobili Lamborghini S.p.A based on copyright law. All of the PDF chapters in the WEB workshop manuals described below are based on information available at the time of publication. The company reserves the right to make updates and modifications. The following are prohibited: reprinting, reproduction, forwarding to unauthorized people and/or third parties, and translation, including partial, without written authorization from Automobili Lamborghini S.p.A.

D) Assembling the petrol filler, flap and petrol filler locking motor.

1. To assemble the petrol filler, insert the gasket (**A-Fig.5**) and tighten the 4 screws (**B-Fig.5**).
2. To assemble the actuator, use the 2 screws (**C-Fig.5**).
3. To assemble the flap, use the 2 screws (**D-Fig.6**).
4. Connect the petrol tank to the fuel filler (**E-Fig.5**) using the pipe.

- Assemble the intake air filter assembly **(013305)**.
- Assemble the right side panel in the engine compartment **(Point C)**.
- Assemble the silencer safety grid **(025105)**.

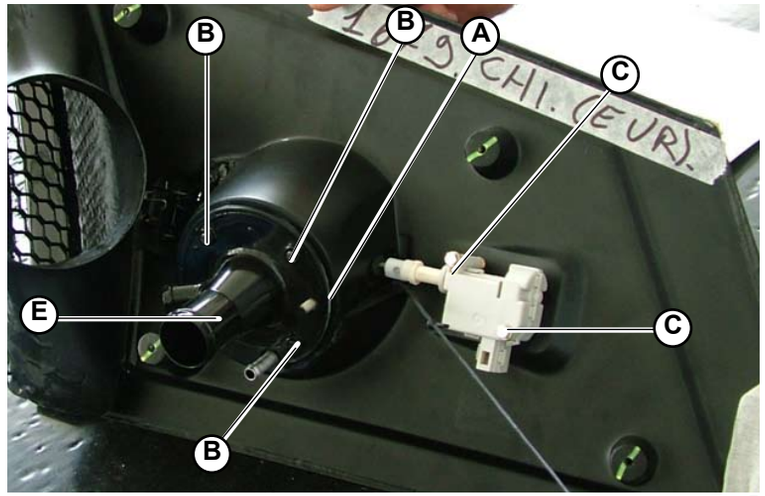

Fig.5

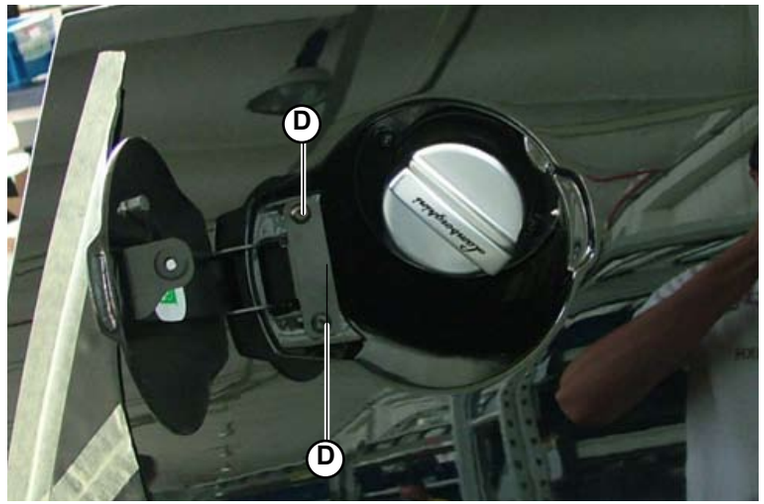

Fig.6

® Automobili Lamborghini S.p.A.
The information and procedures published below are strictly confidential and exclusively for the Lamborghini Dealer Network and Authorized Service Points. All copyrights are property of Automobili Lamborghini S.p.A based on copyright law. All of the PDF chapters in the WEB workshop manuals described below are based on information available at the time of publication. The company reserves the right to make updates and modifications. The following are prohibited: reprinting, reproduction, forwarding to unauthorized people and/or third parties, and translation, including partial, without written authorization from Automobili Lamborghini S.p.A.

E) Assembling the fender cover

1. Assemble the cover (**A-Fig.7**) on the body by tightening the 4 nuts (**B-Fig.7**).
2. Connect the petrol tank to the fuel filler (**C-Fig.7**) using the pipe (for right fender cover only).

- Assemble the intake air filter assembly **(013305)**.
- Assemble the right side panel in the engine compartment **(Point C)**.
- Assemble the silencer safety grid **(025105)**.

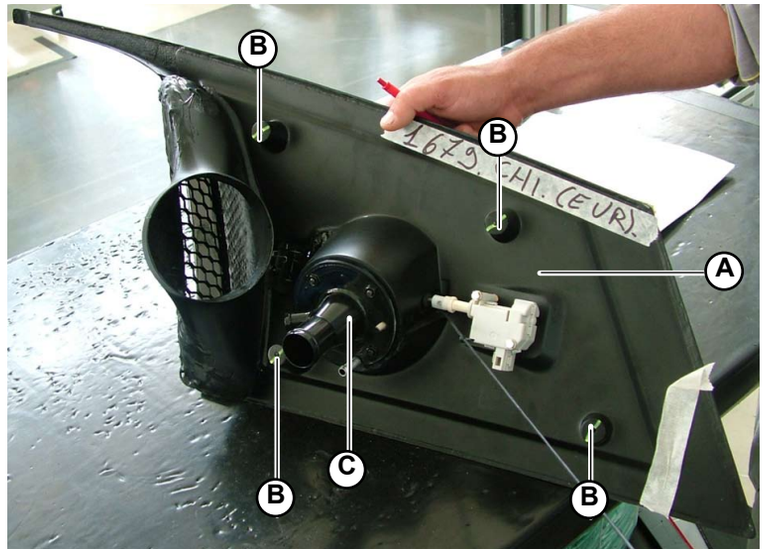

Fig.7

® Automobili Lamborghini S.p.A.
The information and procedures published below are strictly confidential and exclusively for the Lamborghini Dealer Network and Authorized Service Points. All copyrights are property of Automobili Lamborghini S.p.A based on copyright law. All of the PDF chapters in the WEB workshop manuals described below are based on information available at the time of publication. The company reserves the right to make updates and modifications. The following are prohibited: reprinting, reproduction, forwarding to unauthorized people and/or third parties, and translation, including partial, without written authorization from Automobili Lamborghini S.p.A.

F) Assembling the engine safety cover

1. Secure the engine safety cover (**A-Fig.8**) using the 4 screws (**B-Fig.8**).

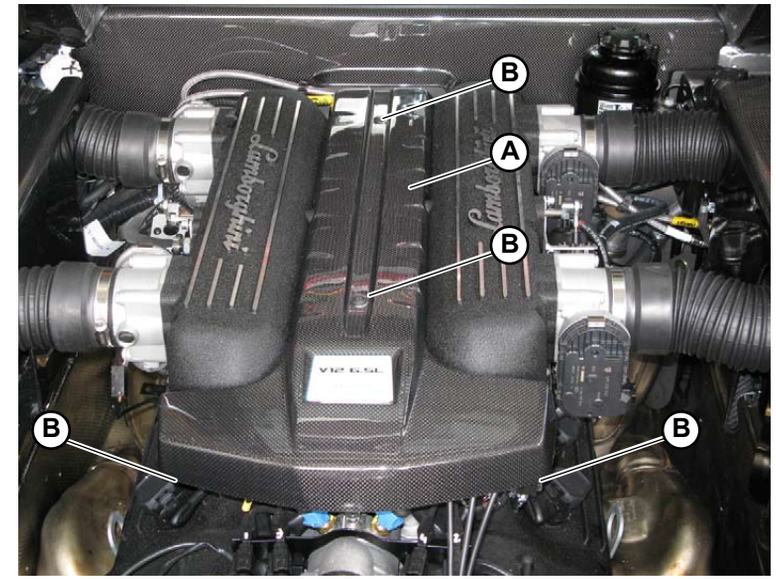

Fig.8

® Automobili Lamborghini S.p.A.
The information and procedures published below are strictly confidential and exclusively for the Lamborghini Dealer Network and Authorized Service Points. All copyrights are property of Automobili Lamborghini S.p.A based on copyright law. All of the PDF chapters in the WEB workshop manuals described below are based on information available at the time of publication. The company reserves the right to make updates and modifications. The following are prohibited: reprinting, reproduction, forwarding to unauthorized people and/or third parties, and translation, including partial, without written authorization from Automobili Lamborghini S.p.A.

Air-conditioner grille disassembly

Preliminary operations

- Remove the car hi-fi system **(097503)**.

Grille disassembly

1. Unscrew the 4 screws (**A-Fig.1**) securing the air conditioner grille (**B-Fig.1**).
2. Extract the grille (first the left side and then the right side).
3. Disconnect the connection (**C-Fig.2**) from the port (**D-Fig.3**) located on the rear of the air-conditioner grille.

Fig.1

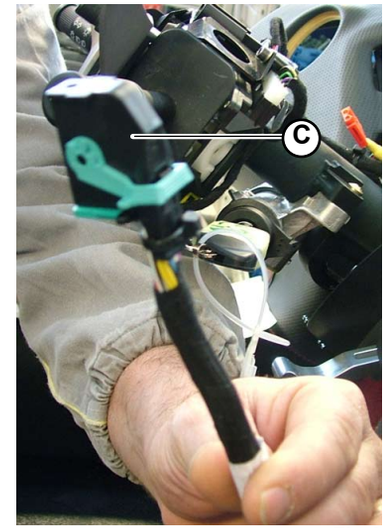

Fig.2

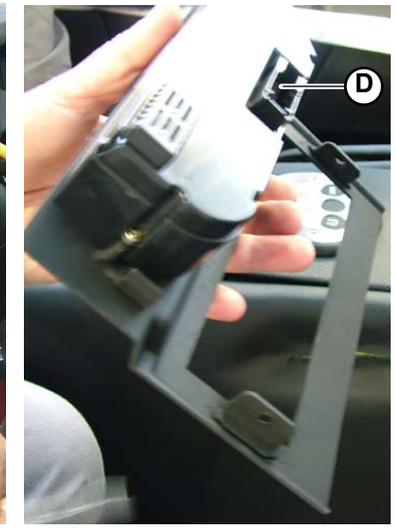

Fig.3

® Automobili Lamborghini S.p.A.
The information and procedures published below are strictly confidential and exclusively for the Lamborghini Dealer Network and Authorized Service Points. All copyrights are property of Automobili Lamborghini S.p.A based on copyright law. All of the PDF chapters in the WEB workshop manuals described below are based on information available at the time of publication. The company reserves the right to make updates and modifications. The following are prohibited: reprinting, reproduction, forwarding to unauthorized people and/or third parties, and translation, including partial, without written authorization from Automobili Lamborghini S.p.A.

Air-conditioner grille assembly

1. Connect the connection (**A-Fig.1**) to the port (**B-Fig.2**) located on the rear of the air-conditioner grille.
2. Insert the grille in its housing (first the right side and then the left side).
3. Secure the air conditioner grille (**C-Fig.3**) using the 4 screws (**D-Fig.3**).

- Assemble the car hi-fi system **(097505)**.

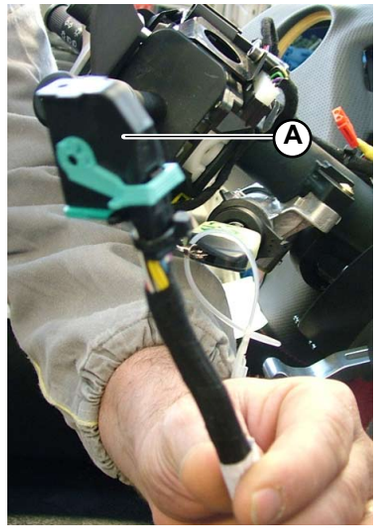

Fig.1

Fig.2

Fig.3

® Automobili Lamborghini S.p.A.
The information and procedures published below are strictly confidential and exclusively for the Lamborghini Dealer Network and Authorized Service Points. All copyrights are property of Automobili Lamborghini S.p.A based on copyright law. All of the PDF chapters in the WEB workshop manuals described below are based on information available at the time of publication. The company reserves the right to make updates and modifications. The following are prohibited: reprinting, reproduction, forwarding to unauthorized people and/or third parties, and translation, including partial, without written authorization from Automobili Lamborghini S.p.A.

Disassembling the air vent

1. Insert a very small screwdriver under the edge of the air vent (**A-Fig.1**) and extract from the dashboard.
2. Disconnect the air intake from the air pipe (**B-Fig.2**).

STOP Always take the utmost care not to damage the leather upholstery during disassembly procedures.

There are 4 air vents inside the car:
- **one side air vent on the right**
- **one side air vent on the left**
- **one central air vent on the right**
- **one central air vent on the left**

The disassembly procedure is the same for all 4 air vents.

Fig.1

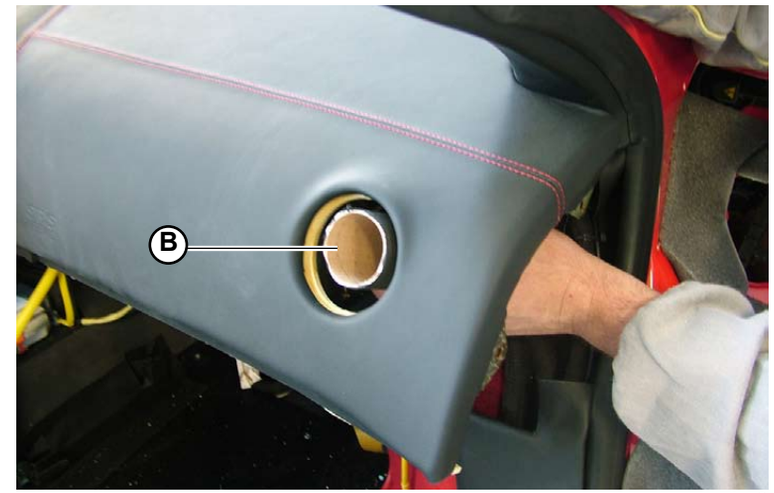

Fig.2

® Automobili Lamborghini S.p.A.
The information and procedures published below are strictly confidential and exclusively for the Lamborghini Dealer Network and Authorized Service Points. All copyrights are property of Automobili Lamborghini S.p.A based on copyright law. All of the PDF chapters in the WEB workshop manuals described below are based on information available at the time of publication. The company reserves the right to make updates and modifications. The following are prohibited: reprinting, reproduction, forwarding to unauthorized people and/or third parties, and translation, including partial, without written authorization from Automobili Lamborghini S.p.A.

Assembling the air vent

There are 4 air vents inside the car:
- **one side air vent on the right**
- **one side air vent on the left**
- **one central air vent on the right**
- **one central air vent on the left**

The assembly procedure is the same for all 4 air vents.

1. Connect the air pipe (**A-Fig.1**) to the corresponding air vent (**B-Fig.2**).
2. Insert the air vent into its housing on the dashboard. Ensure that the guide (**C-Fig.2**) fits into the relative notch (**D-Fig.1**).

STOP Always take the utmost care not to damage the leather upholstery during assembly procedures.

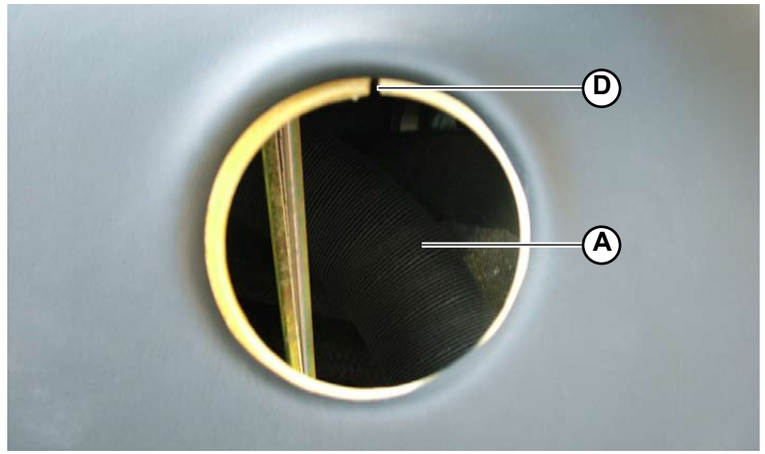

Fig.1

Fig.2

® Automobili Lamborghini S.p.A.
The information and procedures published below are strictly confidential and exclusively for the Lamborghini Dealer Network and Authorized Service Points. All copyrights are property of Automobili Lamborghini S.p.A based on copyright law. All of the PDF chapters in the WEB workshop manuals described below are based on information available at the time of publication. The company reserves the right to make updates and modifications. The following are prohibited: reprinting, reproduction, forwarding to unauthorized people and/or third parties, and translation, including partial, without written authorization from Automobili Lamborghini S.p.A.

Disassembling the wheel arch

There are 4 wheel arch assemblies on the car (one wheel arch assembly for each wheel). Each wheel arch assembly is divided into 3 elements:
A) A front element
B) A central element
C) A rear element

Preliminary operations (the same for disassembling all three wheel arch elements)
- Raise the car on the car lift **(000000).**
- Remove the wheel corresponding to the wheel arch you wish to disassemble **(060103)**.

A) Disassembling the front wheel arch element
1. Unscrew the screws (**A-Fig.1**) securing the front wheel arch element.
2. Remove the front wheel arch element.

B) Disassembling the rear wheel arch element
1. Unscrew the screws (**B-Fig.2**) securing the rear wheel arch element.
2. Disconnect the engine hood opening wire (**C-Fig.2**).
3. Remove the rear wheel arch element.

C) Disassembling the central wheel arch element
1. Remove the rear wheel arch element.
2. Unscrew the screws (**D-Fig.3**) securing the central wheel arch element (some screws are shared by the front and rear wheel arch elements).
3. Remove the central wheel arch element.

If all three wheel arch elements have to be disassembled, it is advisable to observe the following sequence:
1st) rear element
2nd) central element
3rd) front element

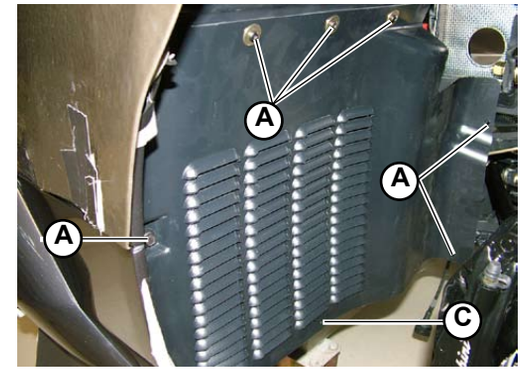

Fig.1

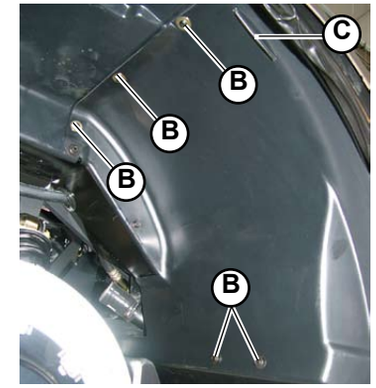

Fig.2

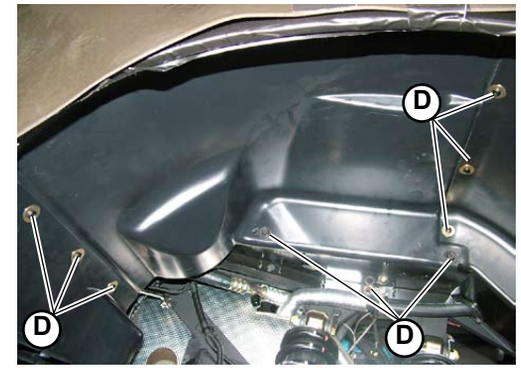

Fig.3

® Automobili Lamborghini S.p.A.
The information and procedures published below are strictly confidential and exclusively for the Lamborghini Dealer Network and Authorized Service Points. All copyrights are property of Automobili Lamborghini S.p.A based on copyright law. All of the PDF chapters in the WEB workshop manuals described below are based on information available at the time of publication. The company reserves the right to make updates and modifications. The following are prohibited: reprinting, reproduction, forwarding to unauthorized people and/or third parties, and translation, including partial, without written authorization from Automobili Lamborghini S.p.A.

Assembling the wheel arch

There are 4 wheel arch assemblies on the car (one wheel arch assembly for each wheel). Each wheel arch assembly is divided into 3 elements:
A) A front element
B) A central element
C) A rear element

A) Assembling the front wheel arch element

1. Secure the front wheel arch element using the screws (**A-Fig.1**).

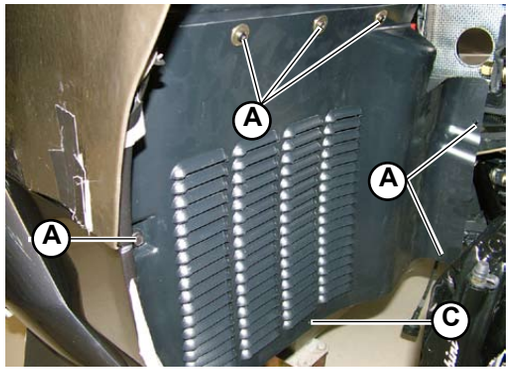

Fig.1

B) Assembling the rear wheel arch element

1. Connect the engine hood opening wire (**B-Fig.2**).
2. Secure the rear wheel arch element using the screws (**C-Fig.1**).

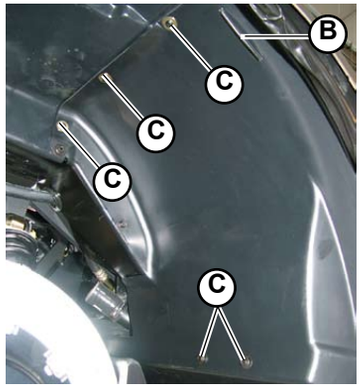

Fig.2

C) Assembling the central wheel arch element

1. Pre-assemble the central wheel arch to the rear wheel arch .
2. Secure the central wheel arch element using the screws (**D-Fig.3**) (some screws are shared by the front and rear wheel arch elements).

- Assemble the relative wheel **(060105)** (this operation must be carried out to assemble all three wheel arch elements).

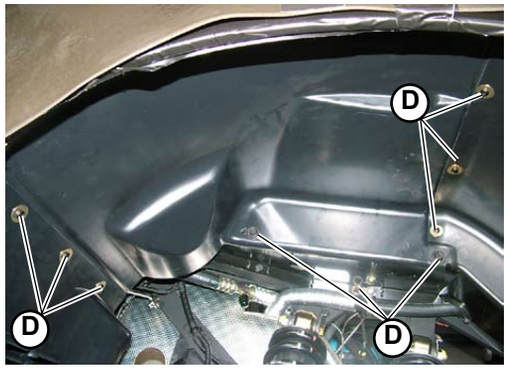

Fig.3

If all three elements of the wheel arch assembly have to be installed, it is advisable to pre-assemble the central and rear elements first. Then assemble on the car:
1st) the central + rear elements
2nd) the front element

® Automobili Lamborghini S.p.A.
The information and procedures published below are strictly confidential and exclusively for the Lamborghini Dealer Network and Authorized Service Points. All copyrights are property of Automobili Lamborghini S.p.A based on copyright law. All of the PDF chapters in the WEB workshop manuals described below are based on information available at the time of publication. The company reserves the right to make updates and modifications. The following are prohibited: reprinting, reproduction, forwarding to unauthorized people and/or third parties, and translation, including partial, without written authorization from Automobili Lamborghini S.p.A.

Disassembling the floor bottom (lower bulkhead)

Preliminary operations

- Raise the car on the car lift **(000000).**

Disassembling the bulkhead

1. Unscrew the screws (**A-Fig.1**) locking the lower bulkhead under the bottom of the vehicle.
2. Disassemble the lower bulkhead.

Fig.1

® Automobili Lamborghini S.p.A.
The information and procedures published below are strictly confidential and exclusively for the Lamborghini Dealer Network and Authorized Service Points. All copyrights are property of Automobili Lamborghini S.p.A based on copyright law. All of the PDF chapters in the WEB workshop manuals described below are based on information available at the time of publication. The company reserves the right to make updates and modifications. The following are prohibited: reprinting, reproduction, forwarding to unauthorized people and/or third parties, and translation, including partial, without written authorization from Automobili Lamborghini S.p.A.

Assembling the floor bottom (lower bulkhead)

1. Position the lower bulkhead under the bottom of the vehicle.
2. Tighten the screws (**A-Fig.1**) locking the lower bulkhead.

Fig.1

® Automobili Lamborghini S.p.A.
The information and procedures published below are strictly confidential and exclusively for the Lamborghini Dealer Network and Authorized Service Points. All copyrights are property of Automobili Lamborghini S.p.A based on copyright law. All of the PDF chapters in the WEB workshop manuals described below are based on information available at the time of publication. The company reserves the right to make updates and modifications. The following are prohibited: reprinting, reproduction, forwarding to unauthorized people and/or third parties, and translation, including partial, without written authorization from Automobili Lamborghini S.p.A.

Rear Spoiler

An adjustable type spoiler in the rear part of the vehicle allows the correct aerodynamic balancing under any speed.
The spoiler has three different positions according to vehicle speed. The CX oscillates between 0.33 and 0.36 (according to the active air vents position too).

Rear Spoiler (Fig.1)	
A.	Spoiler
B.	Stepping motor
C.	Engine hood

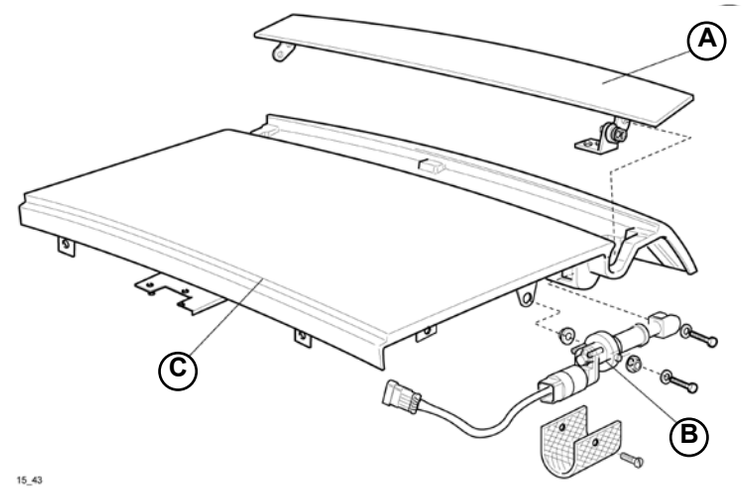

Fig.1

The PCM control unit controls the spoiler stepping motor.
The following table shows the different spoiler positions according to the speed:

Spoiler position	Speed (km/h)	Spoiler condition
0	V<130	CLOSED
1	130<V<220	OPEN
2	V>220	OPEN

The values stated may vary

Hysteresis when closing is 40 km/h.

- **Use the LDAS32 system window (109114) in the case of system malfunctioning or reset.**
- **In the case of malfunctioning, the relative light on the dashboard will come o .**

® Automobili Lamborghini S.p.A.
The information and procedures published below are strictly confidential and exclusively for the Lamborghini Dealer Network and Authorized Service Points. All copyrights are property of Automobili Lamborghini S.p.A based on copyright law. All of the PDF chapters in the WEB workshop manuals described below are based on information available at the time of publication. The company reserves the right to make updates and modifications. The following are prohibited: reprinting, reproduction, forwarding to unauthorized people and/or third parties, and translation, including partial, without written authorization from Automobili Lamborghini S.p.A.

Checking the front bonnet alignment

When the front bonnet is closed (**A-Fig.1**), ensure it is correctly aligned with the rest of the car body. If unaligned, proceed as follows:

- Act on the two fixing screws (**B-Fig.2**) to check the position of the two hinges (**C-Fig.2**).

When the front bonnet is closed, ensure it is at the correct height compared to the rest of the car body. If unaligned, proceed as follows:

- Check the position of the bonnet catch (**D-Fig.3**). Act on the three screws (**E-Fig.3**) to centre the catch with the housing it hooks in to.

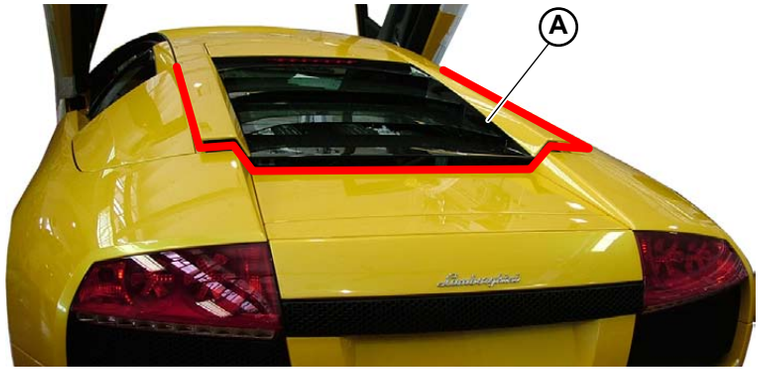

Fig.1

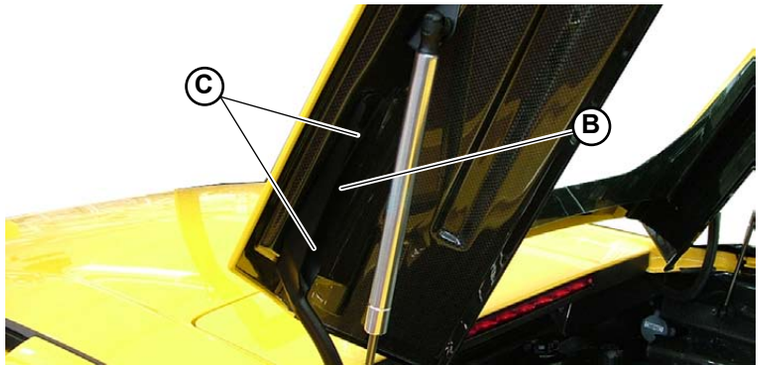

Fig.2

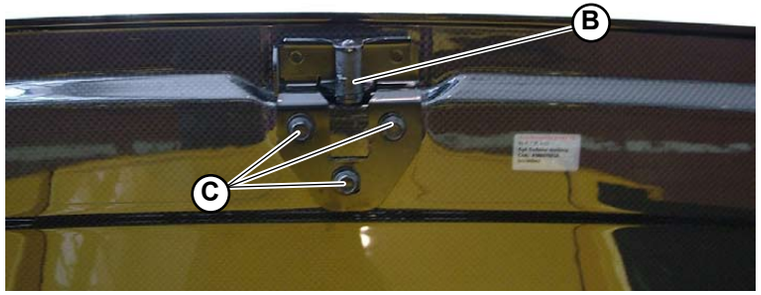

Fig.3

® Automobili Lamborghini S.p.A.
The information and procedures published below are strictly confidential and exclusively for the Lamborghini Dealer Network and Authorized Service Points. All copyrights are property of Automobili Lamborghini S.p.A based on copyright law. All of the PDF chapters in the WEB workshop manuals described below are based on information available at the time of publication. The company reserves the right to make updates and modifications. The following are prohibited: reprinting, reproduction, forwarding to unauthorized people and/or third parties, and translation, including partial, without written authorization from Automobili Lamborghini S.p.A.

This section explains how to disassemble:

A) Rear hood support pistons
B) Rear hood
C) Spoiler
D) Engine hood lock
E) Rear hood lock

® Automobili Lamborghini S.p.A.
The information and procedures published below are strictly confidential and exclusively for the Lamborghini Dealer Network and Authorized Service Points. All copyrights are property of Automobili Lamborghini S.p.A based on copyright law. All of the PDF chapters in the WEB workshop manuals described below are based on information available at the time of publication. The company reserves the right to make updates and modifications. The following are prohibited: reprinting, reproduction, forwarding to unauthorized people and/or third parties, and translation, including partial, without written authorization from Automobili Lamborghini S.p.A.

A) Disassembling the rear hood support pistons

1. Install a support which will prop up the rear hood once the 2 pistons have been disassembled.

CAUTION

Never disassemble the rear hood support pistons unless another support has already been positioned in their place.

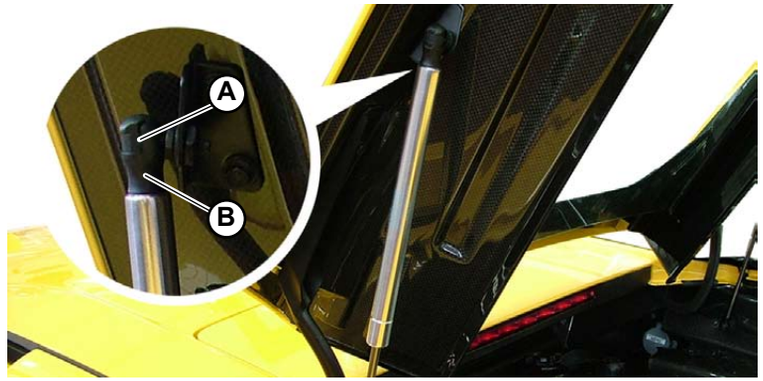

Fig.1

2. Using the tip of a screwdriver, lift the clamps (**A-Fig.1**) located in the 2 ball joints of each piston.
3. Once the clamp has been lifted, detach the ball joints (**B-Fig.1**) from the couplings on the rear hood and engine compartment.

® Automobili Lamborghini S.p.A.
The information and procedures published below are strictly confidential and exclusively for the Lamborghini Dealer Network and Authorized Service Points. All copyrights are property of Automobili Lamborghini S.p.A based on copyright law. All of the PDF chapters in the WEB workshop manuals described below are based on information available at the time of publication. The company reserves the right to make updates and modifications. The following are prohibited: reprinting, reproduction, forwarding to unauthorized people and/or third parties, and translation, including partial, without written authorization from Automobili Lamborghini S.p.A.

B) Disassembling the rear hood

Preliminary operations

- Disassemble the engine hood support pistons **(Point A)**.

Disassembling the hood

1. Unscrew the 4 screws (**A-Fig.2**) securing the 2 hinges (**B-Fig.2**) to the rear hood (2 screws for each hinge).
2. Remove the rear hood.

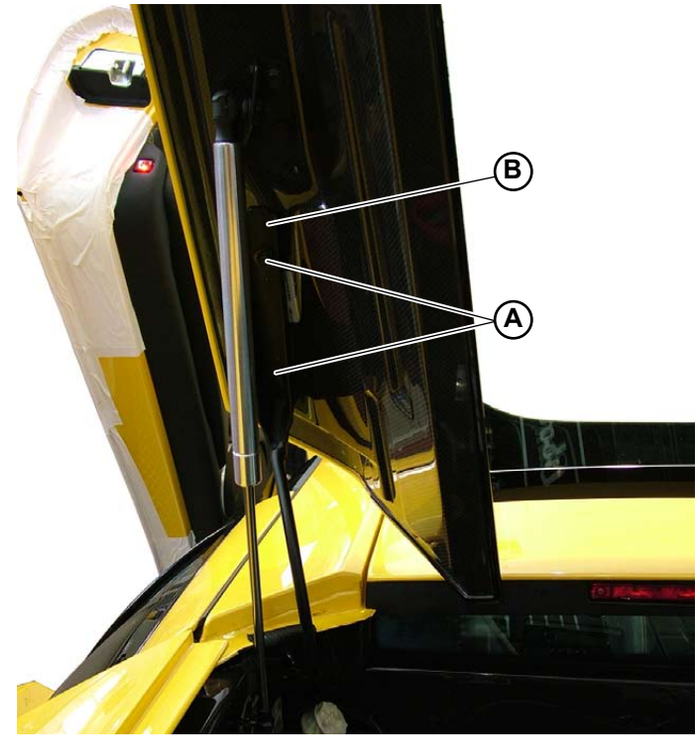

Fig.2

® Automobili Lamborghini S.p.A.
The information and procedures published below are strictly confidential and exclusively for the Lamborghini Dealer Network and Authorized Service Points. All copyrights are property of Automobili Lamborghini S.p.A based on copyright law. All of the PDF chapters in the WEB workshop manuals described below are based on information available at the time of publication. The company reserves the right to make updates and modifications. The following are prohibited: reprinting, reproduction, forwarding to unauthorized people and/or third parties, and translation, including partial, without written authorization from Automobili Lamborghini S.p.A.

C) Disassembling the spoiler

Preliminary operations

- Remove the silencer safety grid **(025103)**.
- Remove the central rear grid **(081303)**.

Disassembling the spoiler

1. Detach the 2 connectors (**A-Fig.3**).
2. Unscrew the 2 screws (**B-Fig.3**) securing the 2 brackets to the rear hood (1 screw for each bracket)
3. To remove the hood, detach the joints (**C-Fig.4**) from the bushings (**D-Fig.4**).

To remove the mobile wing on the spoiler:

4. Unscrew the 2 screws (**E-Fig.5**) securing each of the 2 electric motors powering the mobile wing.
5. Once the electric motor has been removed, manually lift the mobile wing and unscrew the 2 screws securing the piston rod to the wing (1 screw per piston) and all 4 screws (2 on the right and 2 on the left) securing the mobile wing to the rear hood.

Use the LDAS32 system (109114) to operate the motor.

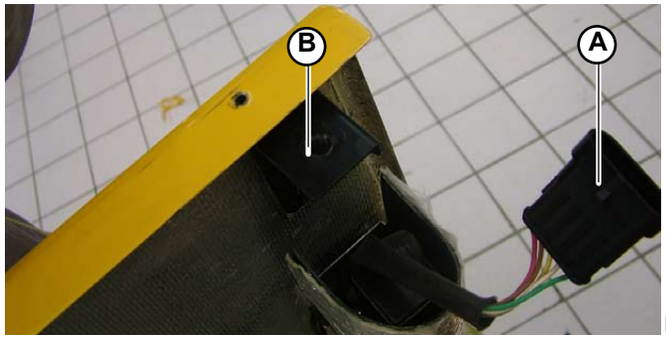

Fig.3

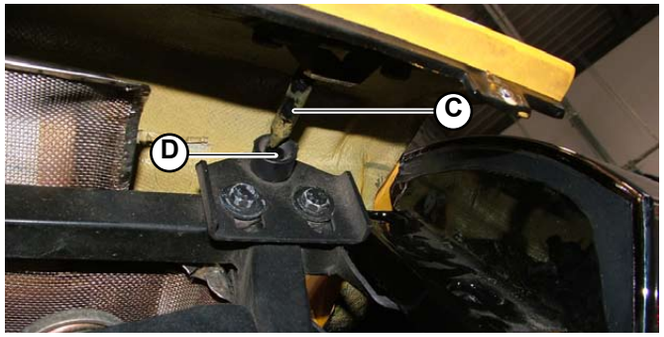

Fig.4

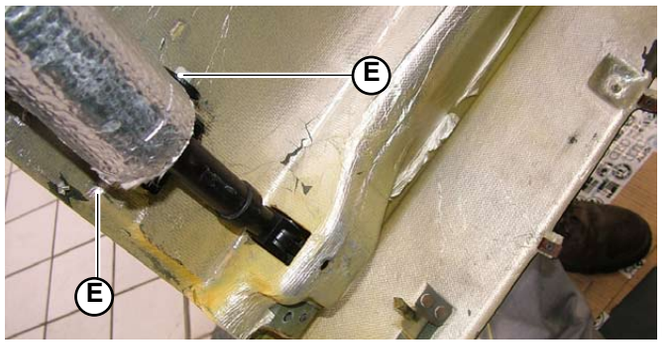

Fig.5

® Automobili Lamborghini S.p.A.
The information and procedures published below are strictly confidential and exclusively for the Lamborghini Dealer Network and Authorized Service Points. All copyrights are property of Automobili Lamborghini S.p.A based on copyright law. All of the PDF chapters in the WEB workshop manuals described below are based on information available at the time of publication. The company reserves the right to make updates and modifications. The following are prohibited: reprinting, reproduction, forwarding to unauthorized people and/or third parties, and translation, including partial, without written authorization from Automobili Lamborghini S.p.A.

D) Disassembling the engine hood lock

1. Unscrew the 2 screws (**A-Fig.6**) securing the lock (**B-Fig.6**) to the chassis.
2. Unscrew the screw (**C-Fig.6**) securing the plate (**D-Fig.6**) to the opening cables.

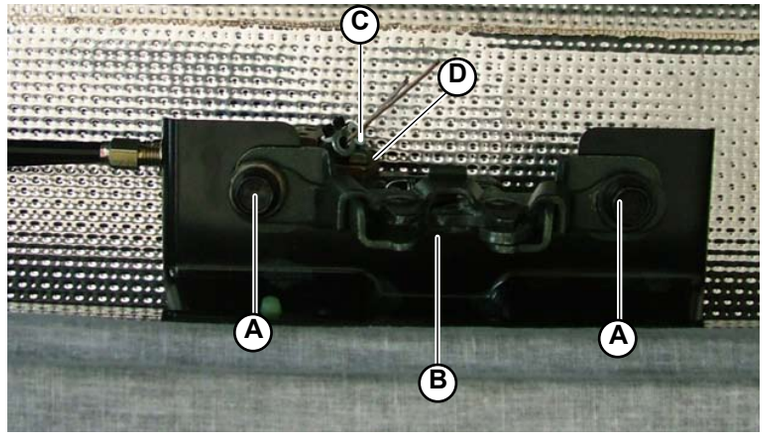

Fig.6

® Automobili Lamborghini S.p.A.
The information and procedures published below are strictly confidential and exclusively for the Lamborghini Dealer Network and Authorized Service Points. All copyrights are property of Automobili Lamborghini S.p.A based on copyright law. All of the PDF chapters in the WEB workshop manuals described below are based on information available at the time of publication. The company reserves the right to make updates and modifications. The following are prohibited: reprinting, reproduction, forwarding to unauthorized people and/or third parties, and translation, including partial, without written authorization from Automobili Lamborghini S.p.A.

E) Disassembling the rear hood lock

1. Disassemble the lock (**A-Fig.7**) by releasing it from the 3 fixing screws (**B-Fig.7**).

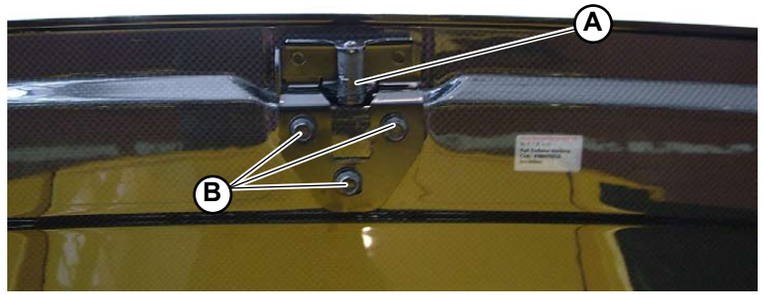

Fig.7

® Automobili Lamborghini S.p.A.
The information and procedures published below are strictly confidential and exclusively for the Lamborghini Dealer Network and Authorized Service Points. All copyrights are property of Automobili Lamborghini S.p.A based on copyright law. All of the PDF chapters in the WEB workshop manuals described below are based on information available at the time of publication. The company reserves the right to make updates and modifications. The following are prohibited: reprinting, reproduction, forwarding to unauthorized people and/or third parties, and translation, including partial, without written authorization from Automobili Lamborghini S.p.A.

This section explains how to assemble:

A) Rear hood support pistons
B) Rear hood
C) Spoiler
D) Engine hood lock
E) Rear hood lock

® Automobili Lamborghini S.p.A.
The information and procedures published below are strictly confidential and exclusively for the Lamborghini Dealer Network and Authorized Service Points. All copyrights are property of Automobili Lamborghini S.p.A based on copyright law. All of the PDF chapters in the WEB workshop manuals described below are based on information available at the time of publication. The company reserves the right to make updates and modifications. The following are prohibited: reprinting, reproduction, forwarding to unauthorized people and/or third parties, and translation, including partial, without written authorization from Automobili Lamborghini S.p.A.

A) Assembling the rear hood support pistons

CAUTION

Never assemble the rear hood support pistons unless another support has already been positioned in their place.

1. Install each piston by applying pressure to the ball joints (**A-Fig.1**) until they snap into the couplings on the rear hood and engine compartment.

Fig.1

® Automobili Lamborghini S.p.A.
The information and procedures published below are strictly confidential and exclusively for the Lamborghini Dealer Network and Authorized Service Points. All copyrights are property of Automobili Lamborghini S.p.A based on copyright law. All of the PDF chapters in the WEB workshop manuals described below are based on information available at the time of publication. The company reserves the right to make updates and modifications. The following are prohibited: reprinting, reproduction, forwarding to unauthorized people and/or third parties, and translation, including partial, without written authorization from Automobili Lamborghini S.p.A.

B) Assembling the rear hood

1. Secure the 2 hinges (**A-Fig.2**) to the rear hood using the 4 screws (**B-Fig.2**) (2 screws for each hinge).

- Assemble the engine hood support pistons **(Point A)**.

Ensure the rear hood is correctly centred and that the rear hood spans are the same on the right and left and well distributed between top and bottom. Once these adjustments have been completed, check the rear hood lock functions correctly.

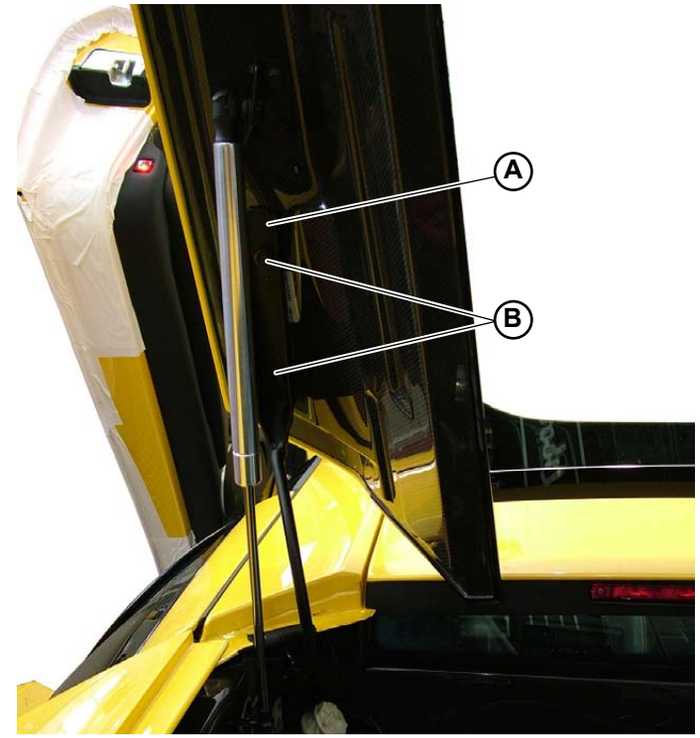

Fig.2

® Automobili Lamborghini S.p.A.
The information and procedures published below are strictly confidential and exclusively for the Lamborghini Dealer Network and Authorized Service Points. All copyrights are property of Automobili Lamborghini S.p.A based on copyright law. All of the PDF chapters in the WEB workshop manuals described below are based on information available at the time of publication. The company reserves the right to make updates and modifications. The following are prohibited: reprinting, reproduction, forwarding to unauthorized people and/or third parties, and translation, including partial, without written authorization from Automobili Lamborghini S.p.A.

C) Assembling the spoiler

To assemble the mobile wing on the spoiler:

1. Lift the mobile wing and tighten the 2 screws securing the electric motor to the wing (1 screw per motor) and all 4 screws (2 on the right and 2 on the left) securing the mobile wing to the rear hood.
2. Tighten the 2 screws (**A-Fig.3**) securing each of the 2 electric motors powering the mobile wing.

To assemble the spoiler:

3. Position the hood and insert the joints (**B-Fig.4**) into the bushings (**C-Fig.4**).
4. Secure the 2 brackets to the rear hood using the 2 screws (**D-Fig.5**) (1 screw for each bracket).
5. Connect the 2 connectors **(E-Fig.5)**.
6. Reset the system from the dialogue box in LDAS-32 **(109100)**.

- Assemble the central rear grid **(081305)**.
- Assemble the silencer safety grid **(025105)**.

Reset using the LDAS32 system (109114).

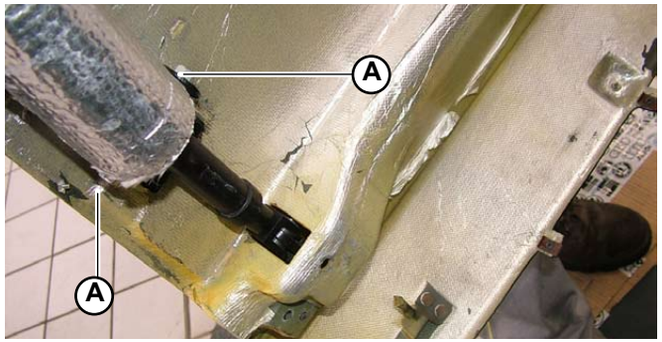

Fig.3

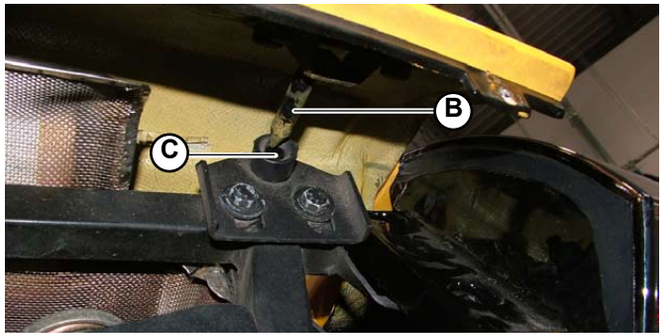

Fig.4

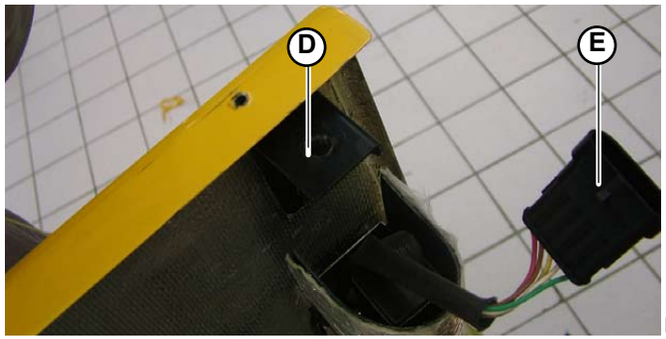

Fig.5

® Automobili Lamborghini S.p.A.
The information and procedures published below are strictly confidential and exclusively for the Lamborghini Dealer Network and Authorized Service Points. All copyrights are property of Automobili Lamborghini S.p.A based on copyright law. All of the PDF chapters in the WEB workshop manuals described below are based on information available at the time of publication. The company reserves the right to make updates and modifications. The following are prohibited: reprinting, reproduction, forwarding to unauthorized people and/or third parties, and translation, including partial, without written authorization from Automobili Lamborghini S.p.A.

D) Assembling the engine hood lock

1. Screw the lock (**A-Fig.6**) on to the frame using the 2 screws (**B-Fig.6**).
2. Fix the plate (**C-Fig.6**) with the opening cables using the screw (**D-Fig.6**).

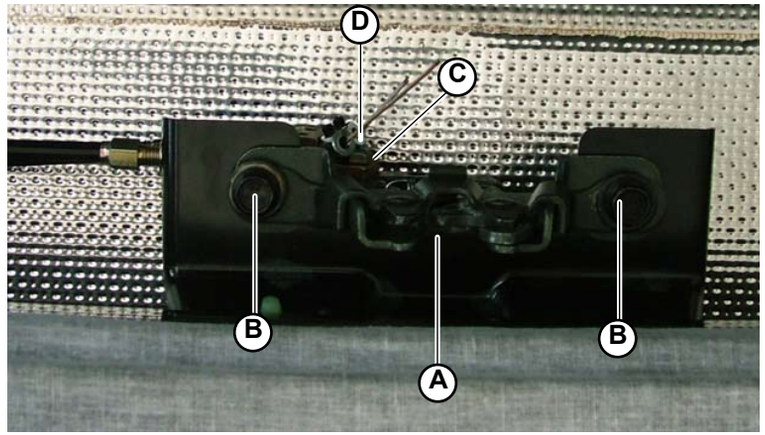

Fig.6

CAUTION

When assembly has been completed, ensure the lock functions correctly. To check the lock proceed as follows: close the rear hood and ensure it is perfectly closed.
Act on the 'open rear hood' control located inside the car and try to gently lift the hood to ensure the safety lock functions.

® Automobili Lamborghini S.p.A.
The information and procedures published below are strictly confidential and exclusively for the Lamborghini Dealer Network and Authorized Service Points. All copyrights are property of Automobili Lamborghini S.p.A based on copyright law. All of the PDF chapters in the WEB workshop manuals described below are based on information available at the time of publication. The company reserves the right to make updates and modifications. The following are prohibited: reprinting, reproduction, forwarding to unauthorized people and/or third parties, and translation, including partial, without written authorization from Automobili Lamborghini S.p.A.

E) Assembling the rear hood lock

1. Assemble the lock (**A-Fig.7**) and secure using the 3 screws (**B-Fig.79**).

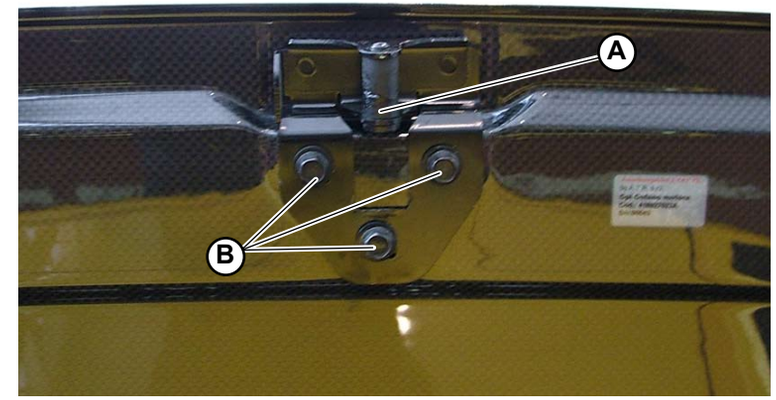

Fig.7

® Automobili Lamborghini S.p.A.
The information and procedures published below are strictly confidential and exclusively for the Lamborghini Dealer Network and Authorized Service Points. All copyrights are property of Automobili Lamborghini S.p.A based on copyright law. All of the PDF chapters in the WEB workshop manuals described below are based on information available at the time of publication. The company reserves the right to make updates and modifications. The following are prohibited: reprinting, reproduction, forwarding to unauthorized people and/or third parties, and translation, including partial, without written authorization from Automobili Lamborghini S.p.A.

Checking door alignment and closure

Close the doors and ensure they are correctly aligned with the rest of the car body. If unaligned, proceed as follows:

- Check the position of the catch housing (**A-Fig.1**). Act on the four screws (**B-Fig.1**) to centre the catch with the housing.
  Screw attachment; **tightening torque (000800-14d).**
- Ensure the catch housing is centred (**A-Fig.1**). If necessary, add or remove spacers.
- Check the tightening torque of the two screws (**C-Fig.1**) securing the two hinges (**D-Fig.1**).

CAUTION!

Ensure the closing catches function correctly: once closed, it must only be possible to open the doors by acting on the door handles.

Fig.1

® Automobili Lamborghini S.p.A.
The information and procedures published below are strictly confidential and exclusively for the Lamborghini Dealer Network and Authorized Service Points. All copyrights are property of Automobili Lamborghini S.p.A based on copyright law. All of the PDF chapters in the WEB workshop manuals described below are based on information available at the time of publication. The company reserves the right to make updates and modifications. The following are prohibited: reprinting, reproduction, forwarding to unauthorized people and/or third parties, and translation, including partial, without written authorization from Automobili Lamborghini S.p.A.

This section explains how to disassemble:

A) Door housing panels
B) Door shock absorber
C) Door actuator
D) Internal door handle
E) Door power window assembly
F) Lock
G) Glass weatherstrip
H) External door handle
I) Door seals
L) Pillar
M) Duct

® Automobili Lamborghini S.p.A.
The information and procedures published below are strictly confidential and exclusively for the Lamborghini Dealer Network and Authorized Service Points. All copyrights are property of Automobili Lamborghini S.p.A based on copyright law. All of the PDF chapters in the WEB workshop manuals described below are based on information available at the time of publication. The company reserves the right to make updates and modifications. The following are prohibited: reprinting, reproduction, forwarding to unauthorized people and/or third parties, and translation, including partial, without written authorization from Automobili Lamborghini S.p.A.

A) Disassembling the door housing panels

Preliminary operations

- Remove the car hi-fi system loudspeaker **(097503)**.
- Disassemble the door cover **(086803)**.

Housing panels disassembly

1. Detach the housing panels from the butyl strips (**A-Fig.1**).

Each door is equipped with 3 internal housings covered by the panels:

- **1 large housing (large panel) (B-Fig.2)**
- **1 small housing (small panel) (C-Fig.2)**
- **1 car hi-fi system loudspeaker housing (car hi-fi system loudspeaker panel) (D-Fig.2)**

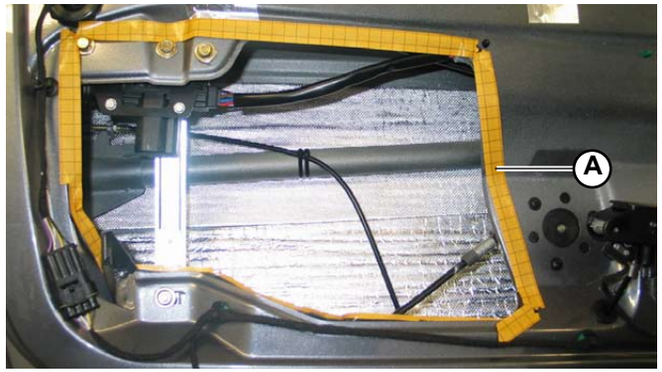

Fig.1

Fig.2

® Automobili Lamborghini S.p.A.
The information and procedures published below are strictly confidential and exclusively for the Lamborghini Dealer Network and Authorized Service Points. All copyrights are property of Automobili Lamborghini S.p.A based on copyright law. All of the PDF chapters in the WEB workshop manuals described below are based on information available at the time of publication. The company reserves the right to make updates and modifications. The following are prohibited: reprinting, reproduction, forwarding to unauthorized people and/or third parties, and translation, including partial, without written authorization from Automobili Lamborghini S.p.A.

B) Disassembling the door shock absorber

Preliminary operations

- Remove the car hi-fi system loudspeaker **(097503)**.
- Disassemble the door cover **(086803)**.
- Disassemble the small housing panel **(Point A)**.

Shock absorber disassembly

1. Detach the shock absorber ball joint (**A-Fig.3**) from the coupler after removing the mounting pin.
2. Extract the door shock absorber through the relative aperture (**B-Fig.4**).

Fig.3

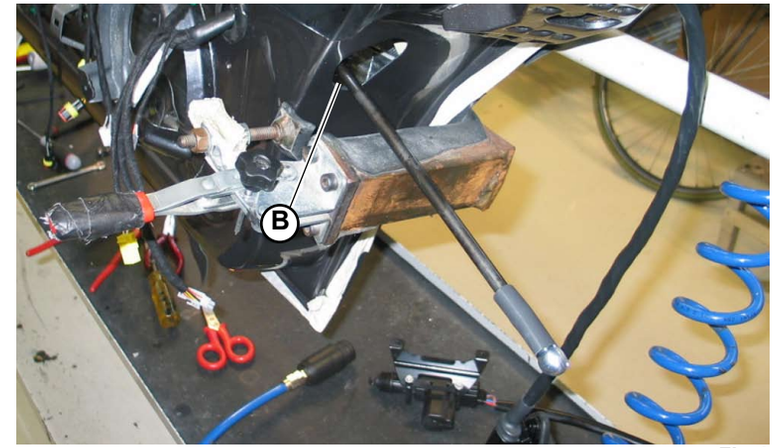

Fig.4

® Automobili Lamborghini S.p.A.
The information and procedures published below are strictly confidential and exclusively for the Lamborghini Dealer Network and Authorized Service Points. All copyrights are property of Automobili Lamborghini S.p.A based on copyright law. All of the PDF chapters in the WEB workshop manuals described below are based on information available at the time of publication. The company reserves the right to make updates and modifications. The following are prohibited: reprinting, reproduction, forwarding to unauthorized people and/or third parties, and translation, including partial, without written authorization from Automobili Lamborghini S.p.A.

C) Disassembling the actuator.

Preliminary operations

- Remove the car hi-fi system loudspeaker **(097503)**.
- Disassemble the door cover **(086803)**.
- Disassemble the large housing panel **(Point A)**.

Actuator disassembly

1. Disconnect the actuator connection (**A-Fig.5**).
2. Detach the lock connection linkage (**B-Fig.5**).
3. Unscrew the 2 screws (**C-Fig.6**) securing the actuator to the door.
4. Remove the actuator.

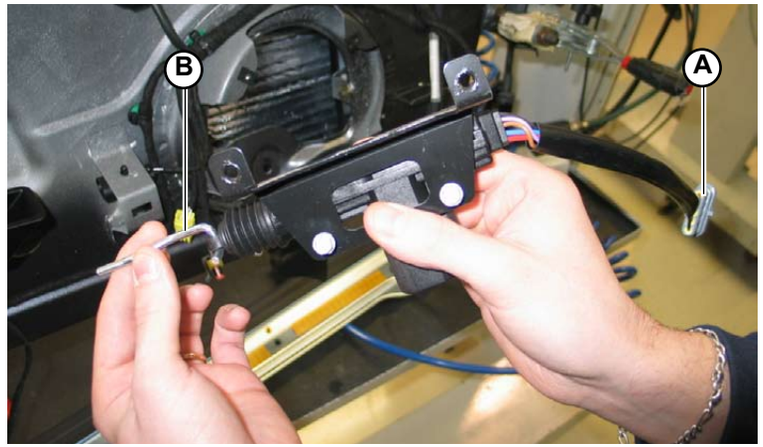

Fig.5

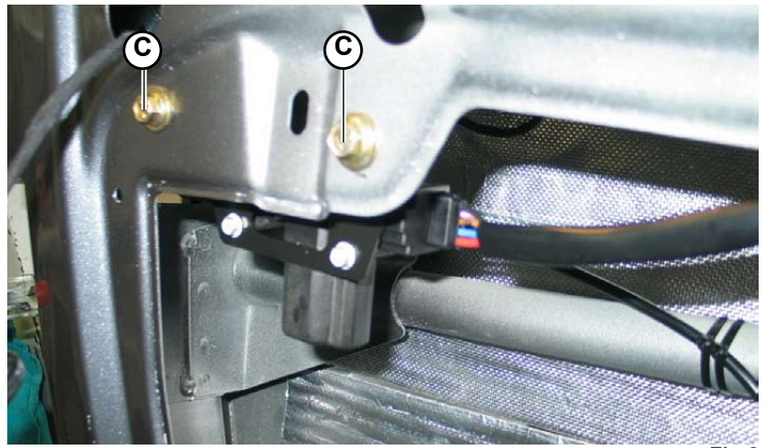

Fig.6

® Automobili Lamborghini S.p.A.
The information and procedures published below are strictly confidential and exclusively for the Lamborghini Dealer Network and Authorized Service Points. All copyrights are property of Automobili Lamborghini S.p.A based on copyright law. All of the PDF chapters in the WEB workshop manuals described below are based on information available at the time of publication. The company reserves the right to make updates and modifications. The following are prohibited: reprinting, reproduction, forwarding to unauthorized people and/or third parties, and translation, including partial, without written authorization from Automobili Lamborghini S.p.A.

D) Disassembling the internal door handle

Preliminary operations

- Remove the car hi-fi system loudspeaker **(097503)**.
- Disassemble the door cover **(086803)**.
- Disassemble the large housing panel **(Point A)**.

Lock opening wire disassembly

1. Unscrew the screw (**A-Fig.7**) locking the handle.
2. Release the lock opening wire and extract from the register.

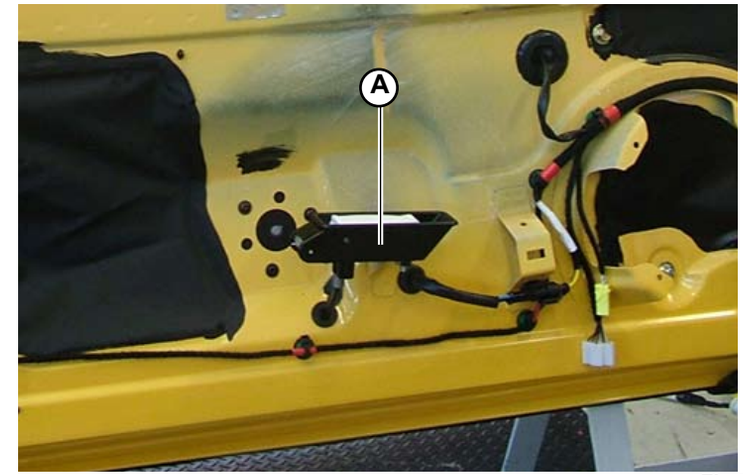

Fig.7

® Automobili Lamborghini S.p.A.
The information and procedures published below are strictly confidential and exclusively for the Lamborghini Dealer Network and Authorized Service Points. All copyrights are property of Automobili Lamborghini S.p.A based on copyright law. All of the PDF chapters in the WEB workshop manuals described below are based on information available at the time of publication. The company reserves the right to make updates and modifications. The following are prohibited: reprinting, reproduction, forwarding to unauthorized people and/or third parties, and translation, including partial, without written authorization from Automobili Lamborghini S.p.A.

E) Disassembling the door power window assembly

Preliminary operations

- Remove the car hi-fi system loudspeaker **(097503)**.
- Disassemble the door cover **(086803)**.
- Remove the 3 housing panels (large + small + car hi-fi system loudspeaker) **(Point A)**.

Door power window disassembly

1. Disconnect the 2 power window assembly connections (**A-Fig.8/9**).
2. Unscrew the 3 screws (**B-Fig.10**) securing the power window motor (**C-Fig.12**).
3. Loosen the 2 screws (**D-Fig.11**) on the buffers (**E-Fig.11**) clamping the base of the window (1 screw for each buffer).

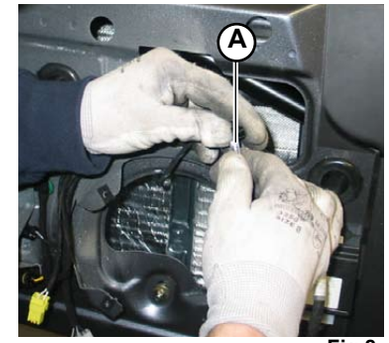

Fig.8

Fig.9

Fig.10

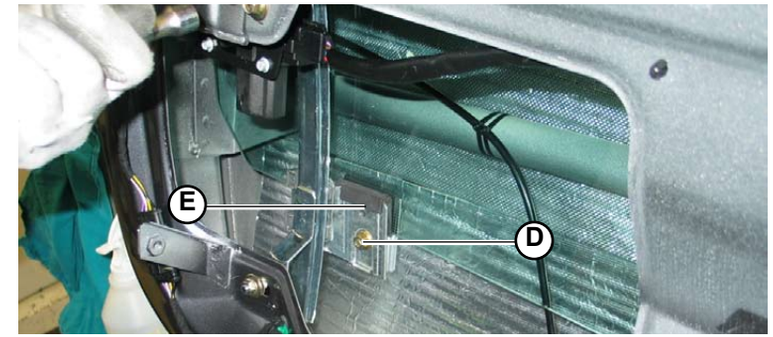

Fig.11

® Automobili Lamborghini S.p.A.
The information and procedures published below are strictly confidential and exclusively for the Lamborghini Dealer Network and Authorized Service Points. All copyrights are property of Automobili Lamborghini S.p.A based on copyright law. All of the PDF chapters in the WEB workshop manuals described below are based on information available at the time of publication. The company reserves the right to make updates and modifications. The following are prohibited: reprinting, reproduction, forwarding to unauthorized people and/or third parties, and translation, including partial, without written authorization from Automobili Lamborghini S.p.A.

4. Unscrew the 4 screws (**F-Fig.13/14**) securing the frame of the power window assembly.
5. Release the power window assembly from the door glass.

STOP **Take the utmost care not to accidentally scratch, knock or damage the glass while carrying out this operation**

6. Remove the power window assembly through the large housing in the door (**G-Fig.15**).

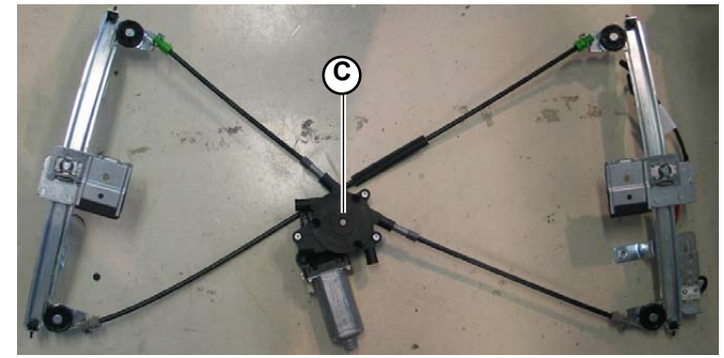

Fig.12

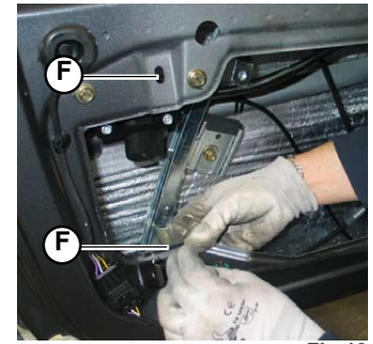

Fig.13

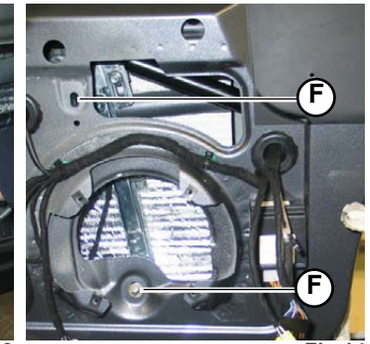

Fig.14

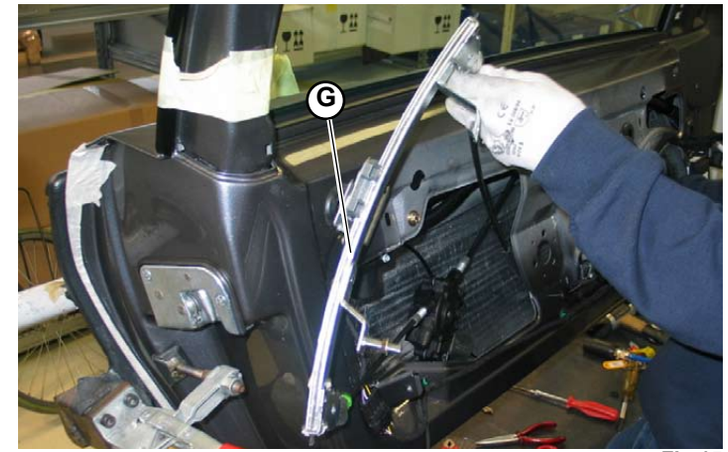

Fig.15

® Automobili Lamborghini S.p.A.
The information and procedures published below are strictly confidential and exclusively for the Lamborghini Dealer Network and Authorized Service Points. All copyrights are property of Automobili Lamborghini S.p.A based on copyright law. All of the PDF chapters in the WEB workshop manuals described below are based on information available at the time of publication. The company reserves the right to make updates and modifications. The following are prohibited: reprinting, reproduction, forwarding to unauthorized people and/or third parties, and translation, including partial, without written authorization from Automobili Lamborghini S.p.A.

F) Disassembling the lock

Preliminary operations

- Remove the car hi-fi system loudspeaker **(097503)**.
- Disassemble the door cover **(086803)**.
- Disassemble the large housing panel **(Point A)**.

Lock disassembly

1. Disconnect the 2 lock wiring harnesses (**A-Fig.16/17**).
2. Remove the 3 external door handle linkages (**B-Fig.16**).
3. Remove the internal door handle linkage (**C-Fig.16**).
4. Remove the actuator linkage (**D-Fig.16**).
5. Unscrew the 4 screws (**E-Fig.18**) securing the lock to the door.

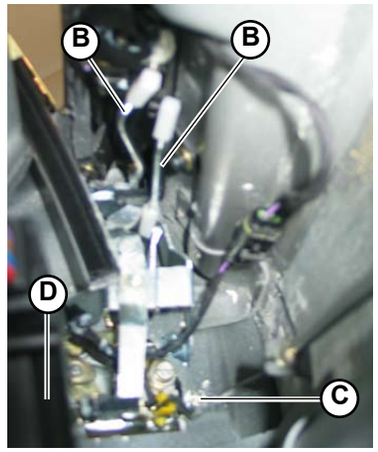

Fig.16

Fig.17

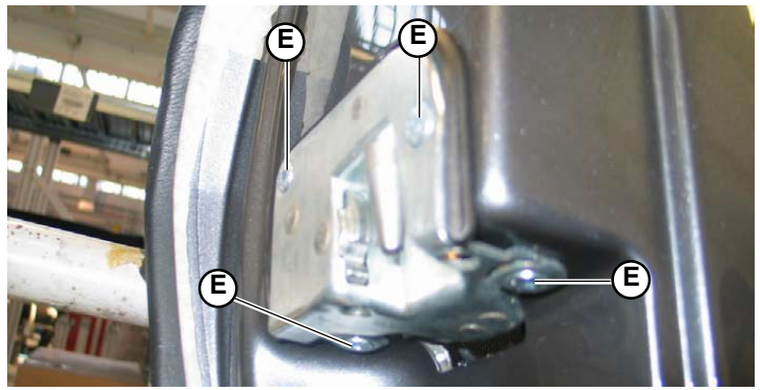

Fig.18

® Automobili Lamborghini S.p.A.
The information and procedures published below are strictly confidential and exclusively for the Lamborghini Dealer Network and Authorized Service Points. All copyrights are property of Automobili Lamborghini S.p.A based on copyright law. All of the PDF chapters in the WEB workshop manuals described below are based on information available at the time of publication. The company reserves the right to make updates and modifications. The following are prohibited: reprinting, reproduction, forwarding to unauthorized people and/or third parties, and translation, including partial, without written authorization from Automobili Lamborghini S.p.A.

G) Disassembling the glass weatherstrip

Preliminary operations

- Remove the car hi-fi system loudspeaker **(097503)**.
- Disassemble the door cover **(086803)**.
- Remove the 3 housing panels (large + small + car hi-fi system loudspeaker) **(Point A)**.
- Disassemble the door glass **(084703)**.

Glass weatherstrip disassembly

1. Remove the 4 adhesive silver-coloured plates (**A-Fig.19**) covering the access holes to the weatherstrip screws.
2. Unscrew the 4 screws (**B-Fig.20**) securing the weatherstrip (**C-Fig.20**) to the door.

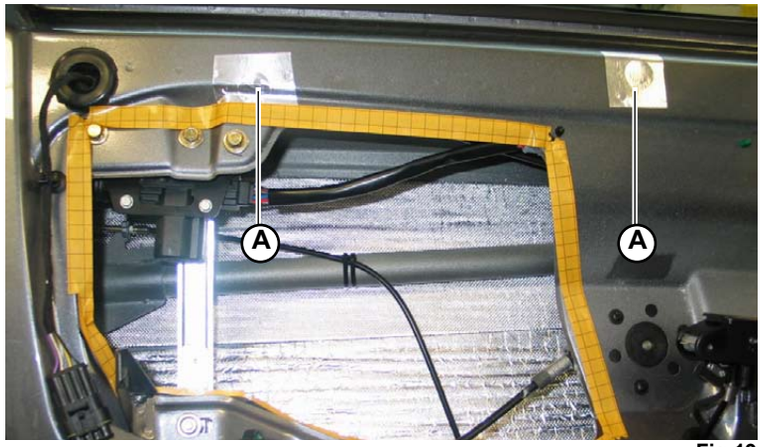

Fig.19

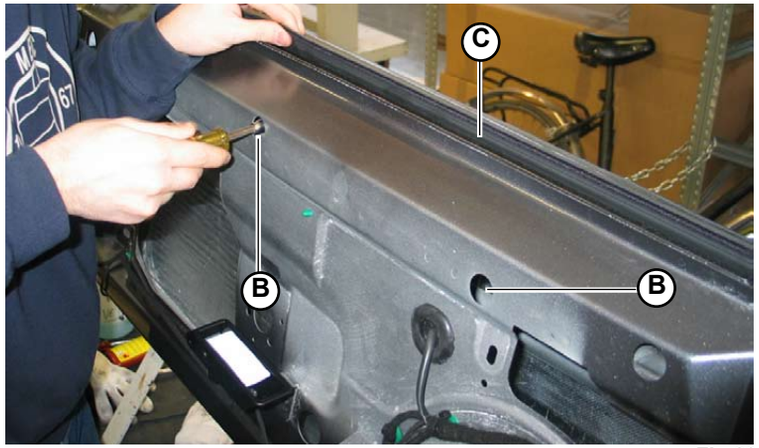

Fig.20

® Automobili Lamborghini S.p.A.
The information and procedures published below are strictly confidential and exclusively for the Lamborghini Dealer Network and Authorized Service Points. All copyrights are property of Automobili Lamborghini S.p.A based on copyright law. All of the PDF chapters in the WEB workshop manuals described below are based on information available at the time of publication. The company reserves the right to make updates and modifications. The following are prohibited: reprinting, reproduction, forwarding to unauthorized people and/or third parties, and translation, including partial, without written authorization from Automobili Lamborghini S.p.A.

H) Removing the external door handle

Preliminary operations

- Remove the car hi-fi system loudspeaker **(097503)**.
- Disassemble the door cover **(086803)**.
- Remove the 3 housing panels (large + small + car hi-fi system loudspeaker) **(Point A)**.
- Disassemble the door glass **(084703)**.
- Disassemble the weatherstrip **(Point G)**.
- Disassemble the lock **(Point F)**.

External door handle disassembly

1. Unscrew the 3 screws (**B-Fig.21**) securing the door handle.

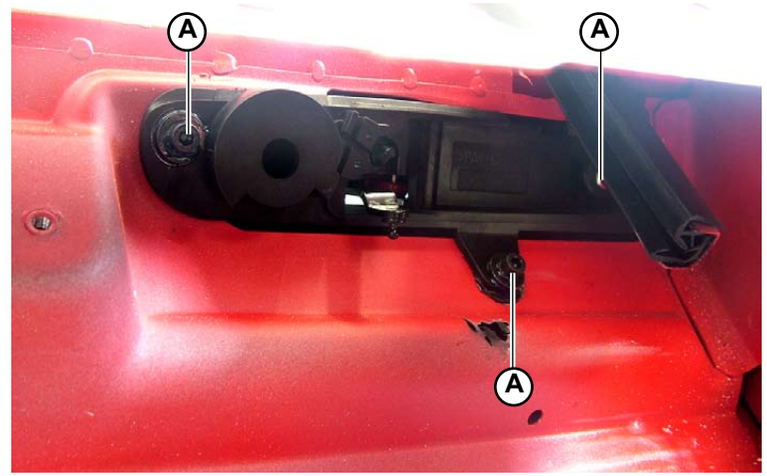

Fig.21

The external door handle is equipped with 3 linkages which connect to the lock. However, these linkages are disconnected when the lock is disassembled.

® Automobili Lamborghini S.p.A.
The information and procedures published below are strictly confidential and exclusively for the Lamborghini Dealer Network and Authorized Service Points. All copyrights are property of Automobili Lamborghini S.p.A based on copyright law. All of the PDF chapters in the WEB workshop manuals described below are based on information available at the time of publication. The company reserves the right to make updates and modifications. The following are prohibited: reprinting, reproduction, forwarding to unauthorized people and/or third parties, and translation, including partial, without written authorization from Automobili Lamborghini S.p.A.

I) Disassembling the door seals

Preliminary operations

- Remove the car hi-fi system loudspeaker **(097503)**.
- Disassemble the door cover **(086803)**.
- Remove the 3 housing panels (large + small + car hi-fi system loudspeaker) **(Point A)**.
- Disassemble the door glass **(084703)**.
- Disassemble the weatherstrip **(Point G)**.

Seal disassembly

1. Remove the upper seal (**A-Fig.22**), the front seal (**B-Fig.23**) and the rear seal (**C-Fig.22**) from the door by extracting from the duct housing them.

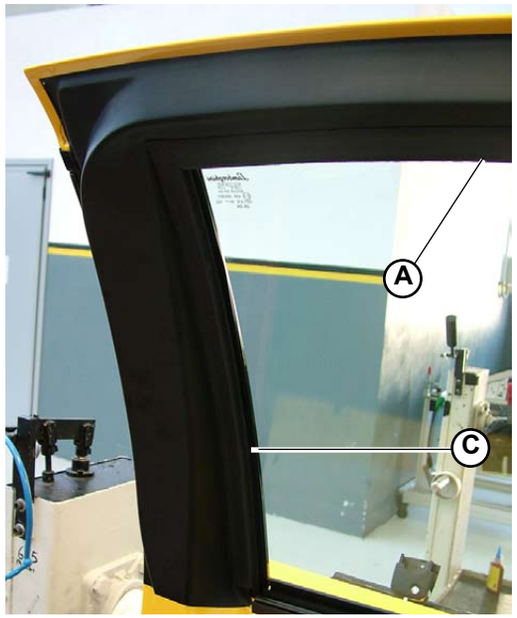

Fig.22

Fig.23

® Automobili Lamborghini S.p.A.
The information and procedures published below are strictly confidential and exclusively for the Lamborghini Dealer Network and Authorized Service Points. All copyrights are property of Automobili Lamborghini S.p.A based on copyright law. All of the PDF chapters in the WEB workshop manuals described below are based on information available at the time of publication. The company reserves the right to make updates and modifications. The following are prohibited: reprinting, reproduction, forwarding to unauthorized people and/or third parties, and translation, including partial, without written authorization from Automobili Lamborghini S.p.A.

L) Disassembling the door pillar

1. Using the special tool, remove the silicone between the door pillar and body.
2. Remove the pillar (**A-Fig.24**) by releasing the 2 slots (**B-Fig.25**) from their couplings.

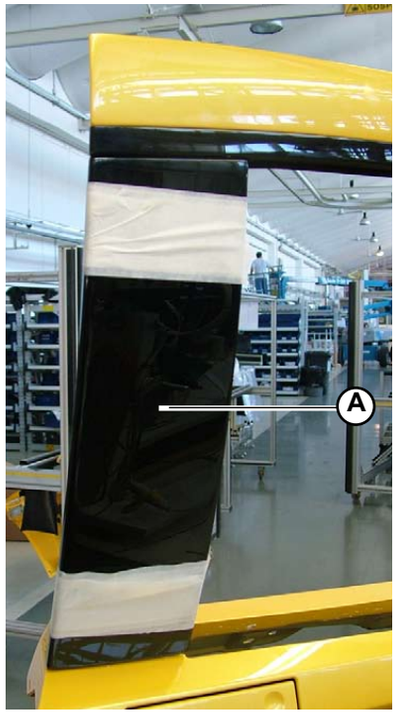

Fig.24

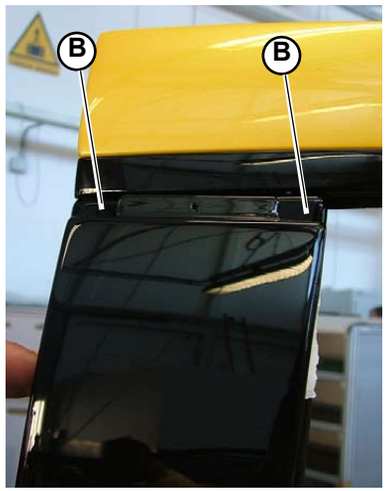

Fig.25

® Automobili Lamborghini S.p.A.
The information and procedures published below are strictly confidential and exclusively for the Lamborghini Dealer Network and Authorized Service Points. All copyrights are property of Automobili Lamborghini S.p.A based on copyright law. All of the PDF chapters in the WEB workshop manuals described below are based on information available at the time of publication. The company reserves the right to make updates and modifications. The following are prohibited: reprinting, reproduction, forwarding to unauthorized people and/or third parties, and translation, including partial, without written authorization from Automobili Lamborghini S.p.A.

M) Disassembling the duct

Preliminary operations

- Disassemble the external rear-view mirror part **(081003)**.
- Disassemble the door pillar **(Point L)**.
- Disassemble the door seals **(Point I)**.

Disassembling the duct

1. Remove the rivets that secure the door duct.
2. Remove the duct (**A-Fig.26**).

Fig.26

® Automobili Lamborghini S.p.A.
The information and procedures published below are strictly confidential and exclusively for the Lamborghini Dealer Network and Authorized Service Points. All copyrights are property of Automobili Lamborghini S.p.A based on copyright law. All of the PDF chapters in the WEB workshop manuals described below are based on information available at the time of publication. The company reserves the right to make updates and modifications. The following are prohibited: reprinting, reproduction, forwarding to unauthorized people and/or third parties, and translation, including partial, without written authorization from Automobili Lamborghini S.p.A.

This section explains how to assemble:

A) Door housing panels
B) Door shock absorber
C) Door actuator
D) Internal door handle
E) Door power window assembly
F) Lock
G) Glass weatherstrip
H) External door handle
I) Duct
L) Door seals
M) Pillar

® Automobili Lamborghini S.p.A.
The information and procedures published below are strictly confidential and exclusively for the Lamborghini Dealer Network and Authorized Service Points. All copyrights are property of Automobili Lamborghini S.p.A based on copyright law. All of the PDF chapters in the WEB workshop manuals described below are based on information available at the time of publication. The company reserves the right to make updates and modifications. The following are prohibited: reprinting, reproduction, forwarding to unauthorized people and/or third parties, and translation, including partial, without written authorization from Automobili Lamborghini S.p.A.

A) Assembling the door housing panels

1. Arrange strips of butyl (**A-Fig.1**) around the perimeter of the housings to be covered with the panels.
2. Apply the housing panels to the door and check they adhere to the butyl strips. Ensure the panels lie flat and adhere perfectly to the butyl.
3. Once the panel has been applied, shape by cutting away any left-over fringes.

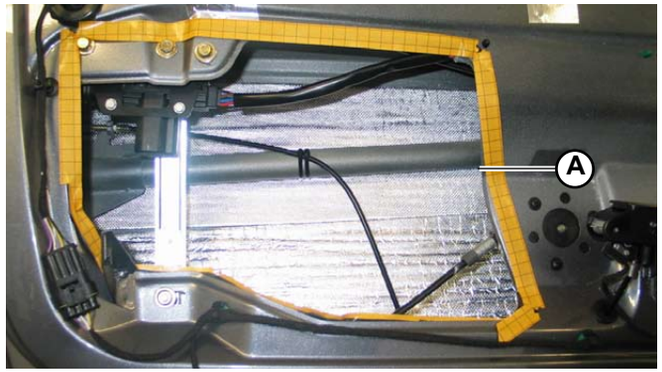

Fig.1

Each door is equipped with 3 internal housings covered by the panels:
- **1 large housing (large panel) (B-Fig. 2)**
- **1 small housing (small panel) (C-Fig. 2)**
- **1 car hi-fi system loudspeaker housing (car hi-fi system loudspeaker panel) (D-Fig. 2)**

- Assemble the door cover **(086805)**.
- Assemble the car hi-fi system loudspeaker **(097505)**.

Fig.2

® Automobili Lamborghini S.p.A.
The information and procedures published below are strictly confidential and exclusively for the Lamborghini Dealer Network and Authorized Service Points. All copyrights are property of Automobili Lamborghini S.p.A based on copyright law. All of the PDF chapters in the WEB workshop manuals described below are based on information available at the time of publication. The company reserves the right to make updates and modifications. The following are prohibited: reprinting, reproduction, forwarding to unauthorized people and/or third parties, and translation, including partial, without written authorization from Automobili Lamborghini S.p.A.

B) Assembling the door shock absorber

1. Insert the shock absorber into the door through the side aperture (**A-Fig.3**).
2. Attach the shock absorber ball joint (**B-Fig.4**) to the coupler. Lock into place using the mounting pin.

- Assemble the small housing panel **(Point A)**.
- Assemble the door cover **(086805)**.
- Assemble the car hi-fi system loudspeaker **(097505)**.

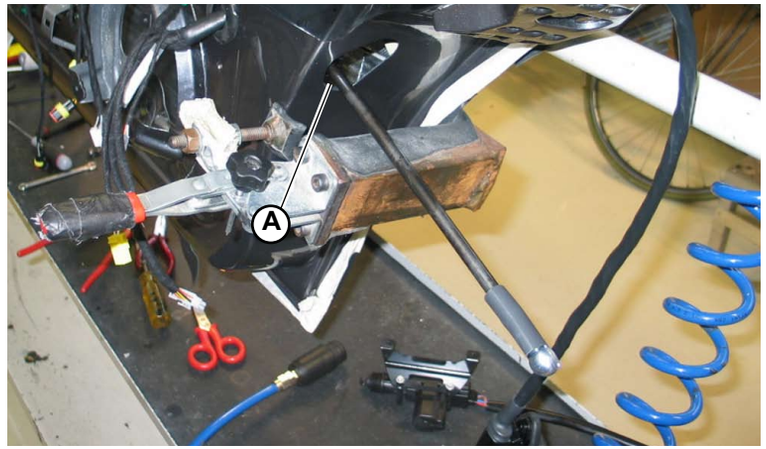

Fig.3

Fig.4

® Automobili Lamborghini S.p.A.
The information and procedures published below are strictly confidential and exclusively for the Lamborghini Dealer Network and Authorized Service Points. All copyrights are property of Automobili Lamborghini S.p.A based on copyright law. All of the PDF chapters in the WEB workshop manuals described below are based on information available at the time of publication. The company reserves the right to make updates and modifications. The following are prohibited: reprinting, reproduction, forwarding to unauthorized people and/or third parties, and translation, including partial, without written authorization from Automobili Lamborghini S.p.A.

C) Assembling the actuator.

1. Secure the actuator to the door using the 2 screws (**A-Fig.5**).
2. Attach the lock connection linkage (**B-Fig.6**).
3. Attach the actuator connection (**C-Fig.6**).

- Assemble the large housing panel **(Point A)**.
- Assemble the door cover **(086805)**.
- Assemble the car hi-fi system loudspeaker **(097505)**.

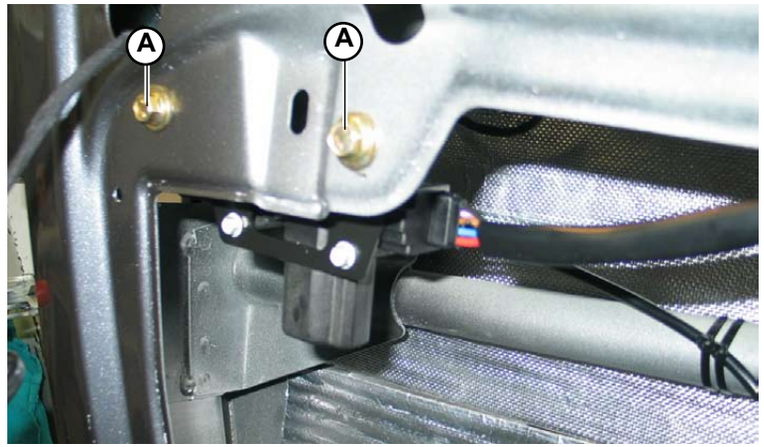

Fig.5

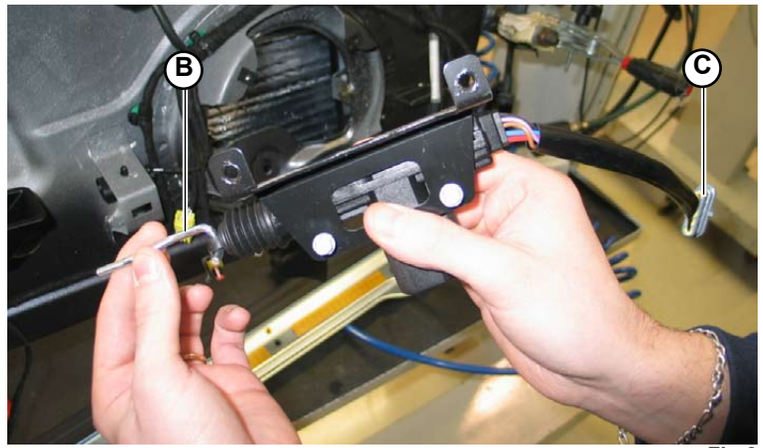

Fig.6

® Automobili Lamborghini S.p.A.
The information and procedures published below are strictly confidential and exclusively for the Lamborghini Dealer Network and Authorized Service Points. All copyrights are property of Automobili Lamborghini S.p.A based on copyright law. All of the PDF chapters in the WEB workshop manuals described below are based on information available at the time of publication. The company reserves the right to make updates and modifications. The following are prohibited: reprinting, reproduction, forwarding to unauthorized people and/or third parties, and translation, including partial, without written authorization from Automobili Lamborghini S.p.A.

D) Assembling the internal door handle

1. Hook the lock opening wire and fix to the register.
2. Tighten the screw (**A-Fig.7**) locking the handle.

- Assemble the large housing panel **(Point A)**.
- Assemble the door cover **(086805)**.
- Assemble the car hi-fi system loudspeaker **(097505)**.

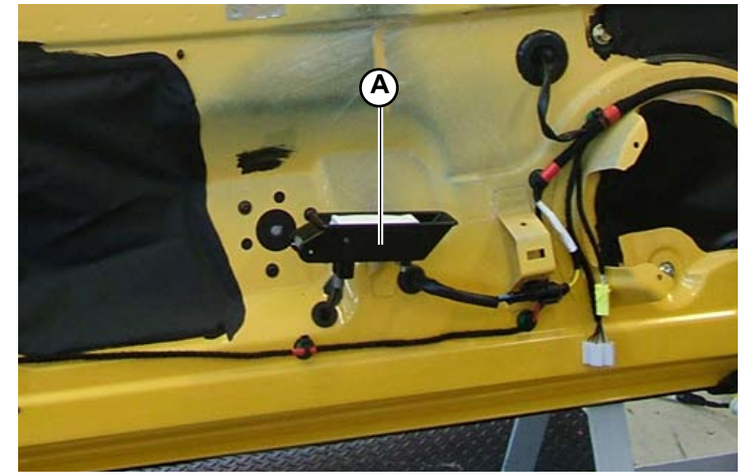

Fig.7

® Automobili Lamborghini S.p.A.
The information and procedures published below are strictly confidential and exclusively for the Lamborghini Dealer Network and Authorized Service Points. All copyrights are property of Automobili Lamborghini S.p.A based on copyright law. All of the PDF chapters in the WEB workshop manuals described below are based on information available at the time of publication. The company reserves the right to make updates and modifications. The following are prohibited: reprinting, reproduction, forwarding to unauthorized people and/or third parties, and translation, including partial, without written authorization from Automobili Lamborghini S.p.A.

E) Assembling the door power window assembly

1. Before inserting the power window assembly inside the door, loosen the two buffer slides (**A-Fig.8**), loosen the limit microswitch (**B-Fig.9**) and then lubricate the guides (**C-Fig.8**) with vaseline.
2. Insert the power window assembly inside the door through the large housing (**D-Fig.9**).
3. To clamp the power window assembly to the door glass, insert the base of the glass into the buffers.

STOP Take the utmost care not to scratch the glass or accidentally knock or damage the glass while carrying out this operation.

4. Secure the frame of the power window assembly using the 4 screws (**E-Fig.10/11**).

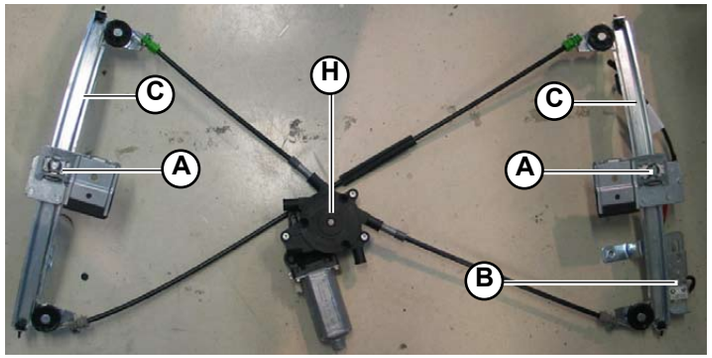

Fig.8

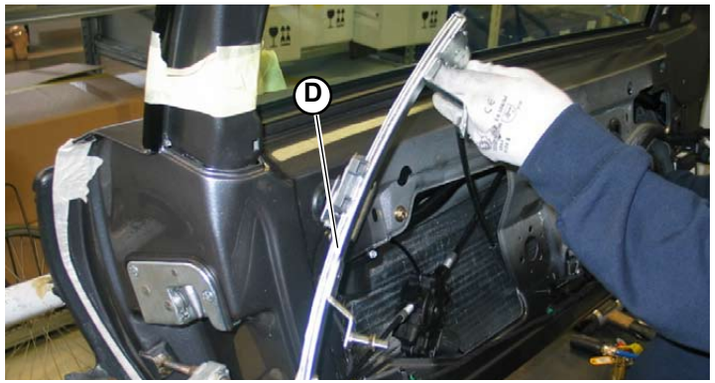

Fig.9

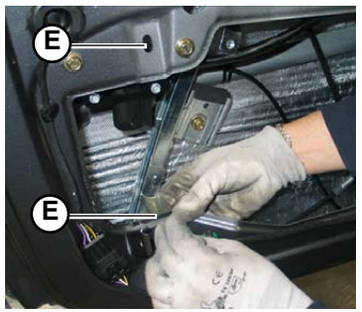

Fig.10

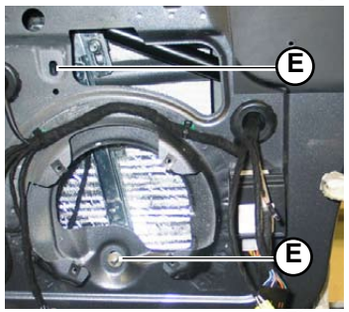

Fig.11

® Automobili Lamborghini S.p.A.
The information and procedures published below are strictly confidential and exclusively for the Lamborghini Dealer Network and Authorized Service Points. All copyrights are property of Automobili Lamborghini S.p.A based on copyright law. All of the PDF chapters in the WEB workshop manuals described below are based on information available at the time of publication. The company reserves the right to make updates and modifications. The following are prohibited: reprinting, reproduction, forwarding to unauthorized people and/or third parties, and translation, including partial, without written authorization from Automobili Lamborghini S.p.A.

5. Secure the door glass by tightening the 2 screws (**F-Fig.12**) on the buffers (**G-Fig.13**) (one screw for each buffer).
6. Secure the power window motor (**H-Fig.8**) to the door using the 3 screws (**L-Fig.13**).
7. Connect the 2 connections (**M-Fig.14/15**) in the power window assembly.
8. Tighten the screws of the slides and the microswitch loosened beforehand.

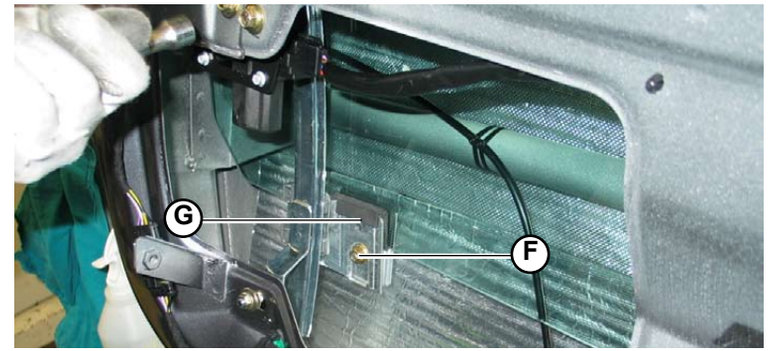

Fig.12

STOP

When assembly has been completed, ensure that:
- **the descent and ascent speed of the glass is the same;**
- **the weatherstrip prevents water leaking from the outside.**
- **the glass is raised and lowered evenly, and the front and rear parts of the glass come to a stop at the same time.**

Fig.13

- Assemble the 3 housing panels (large + small + car hi-fi system loudspeaker) **(Point A)**.
- Assemble the door cover **(086805)**.
- Assemble the car hi-fi system loudspeaker **(097505)**.

Fig.14

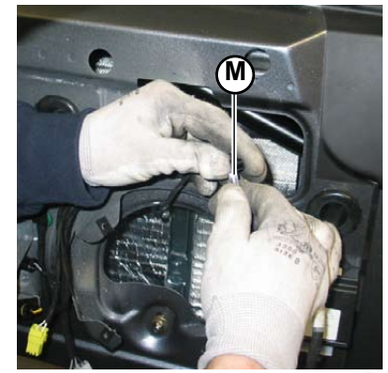

Fig.15

® Automobili Lamborghini S.p.A.
The information and procedures published below are strictly confidential and exclusively for the Lamborghini Dealer Network and Authorized Service Points. All copyrights are property of Automobili Lamborghini S.p.A based on copyright law. All of the PDF chapters in the WEB workshop manuals described below are based on information available at the time of publication. The company reserves the right to make updates and modifications. The following are prohibited: reprinting, reproduction, forwarding to unauthorized people and/or third parties, and translation, including partial, without written authorization from Automobili Lamborghini S.p.A.

F) Assembling the lock

1. Secure the lock to the door using the 4 screws (**A-Fig.16**).
2. Connect the actuator linkage (**D-Fig.17**).
3. Connect the internal door handle linkage (**C-Fig.17**).
4. Connect the 3 external door handle linkages (**D-Fig.17**).
5. Disconnect the 2 lock wiring harnesses (**E-Fig.18**).

- Assemble the large housing panel **(Point A)**.
- Assemble the door cover **(086805)**.
- Assemble the car hi-fi system loudspeaker **(097505)**.

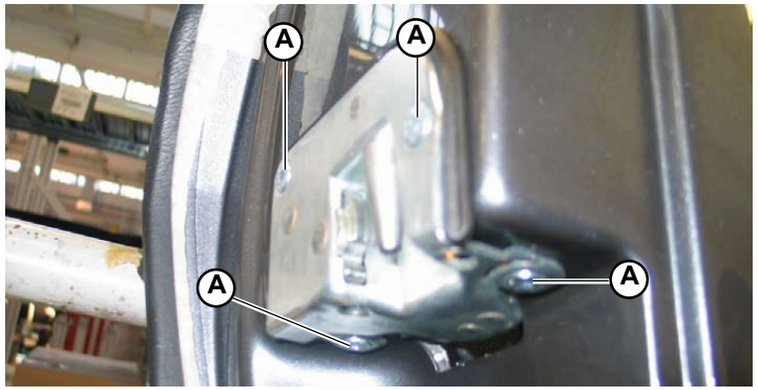

Fig.16

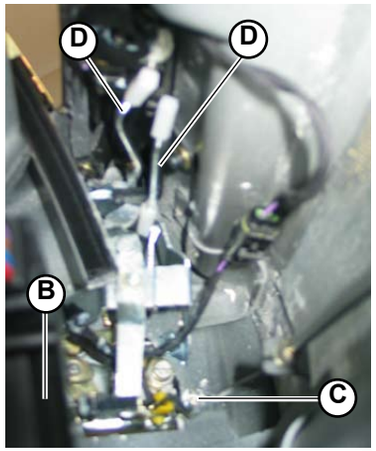

Fig.17

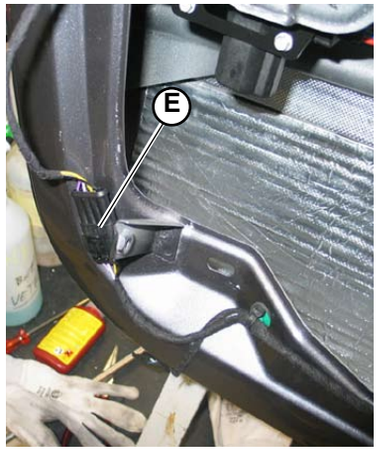

Fig.18

® Automobili Lamborghini S.p.A.
The information and procedures published below are strictly confidential and exclusively for the Lamborghini Dealer Network and Authorized Service Points. All copyrights are property of Automobili Lamborghini S.p.A based on copyright law. All of the PDF chapters in the WEB workshop manuals described below are based on information available at the time of publication. The company reserves the right to make updates and modifications. The following are prohibited: reprinting, reproduction, forwarding to unauthorized people and/or third parties, and translation, including partial, without written authorization from Automobili Lamborghini S.p.A.

G) Assembling the glass weatherstrip

1. Secure the weatherstrip (**A-Fig.19**) to the door using the 4 screws (**B-Fig.19**).
2. Cover the access holes to the weatherstrip screws using the adhesive silver-coloured plates (**C-Fig.20**).

- Assemble the door glass **(084705)**.
- Assemble the 3 housing panels (large + small + car hi-fi system loudspeaker) **(Point A)**.
- Assemble the door cover **(086805)**.
- Assemble the car hi-fi system loudspeaker **(097505)**.

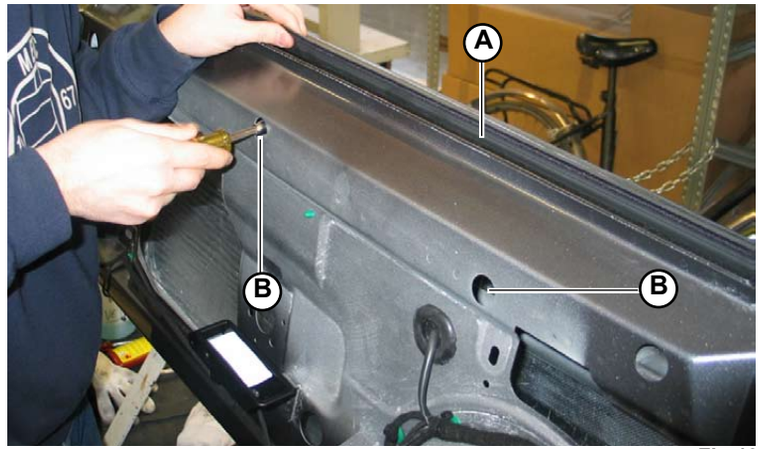

Fig.19

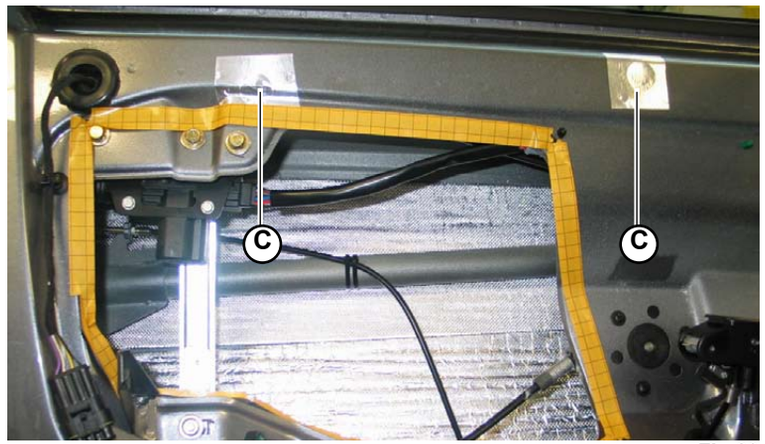

Fig.20

® Automobili Lamborghini S.p.A.
The information and procedures published below are strictly confidential and exclusively for the Lamborghini Dealer Network and Authorized Service Points. All copyrights are property of Automobili Lamborghini S.p.A based on copyright law. All of the PDF chapters in the WEB workshop manuals described below are based on information available at the time of publication. The company reserves the right to make updates and modifications. The following are prohibited: reprinting, reproduction, forwarding to unauthorized people and/or third parties, and translation, including partial, without written authorization from Automobili Lamborghini S.p.A.

H) Assembling the external door handle

1. Secure the external handle to the door using the 3 screws (**A-Fig.21**).

- Assemble the lock **(Point F)**.
- Assemble the weatherstrip **(Point G)**.
- Assemble the door glass **(084705)**.
- Assemble the 3 housing panels (large + small + car hi-fi system loudspeaker) **(Point A)**.
- Assemble the door cover **(086805)**.
- Assemble the car hi-fi system loudspeaker **(097505)**.

The external door handle is equipped with 3 linkages which connect to the lock. These linkages are connected when the lock is assembled.

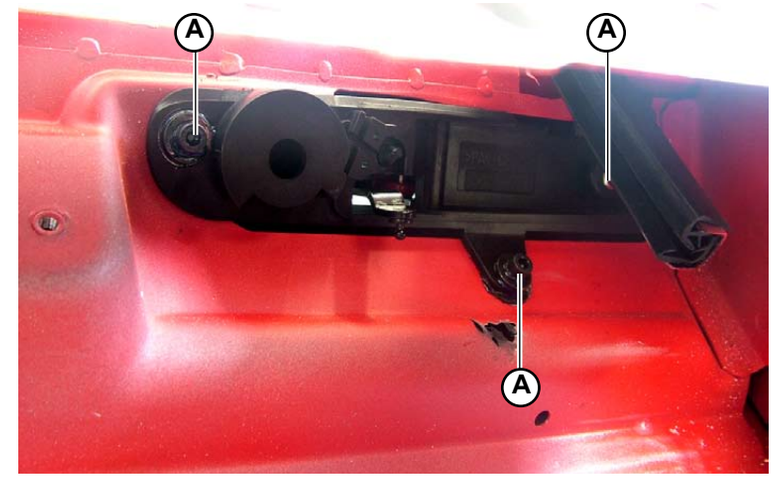

Fig.21

® Automobili Lamborghini S.p.A.
The information and procedures published below are strictly confidential and exclusively for the Lamborghini Dealer Network and Authorized Service Points. All copyrights are property of Automobili Lamborghini S.p.A based on copyright law. All of the PDF chapters in the WEB workshop manuals described below are based on information available at the time of publication. The company reserves the right to make updates and modifications. The following are prohibited: reprinting, reproduction, forwarding to unauthorized people and/or third parties, and translation, including partial, without written authorization from Automobili Lamborghini S.p.A.

I) Assembling the duct

1. Secure the duct (**A-Fig.22**) to the door using the rivets.

- Assemble the seals **(Point L)**.
- Assemble the door pillar **(Point M)**.
- Assemble the weatherstrip **(Point G)**.
- Assemble the door glass **(084705)**.
- Assemble the 3 housing panels (large + small + car hi-fi system loudspeaker) **(Point A)**.
- Assemble the door cover **(086805)**.
- Assemble the car hi-fi system loudspeaker **(097505)**.

Fig.22

® Automobili Lamborghini S.p.A.
The information and procedures published below are strictly confidential and exclusively for the Lamborghini Dealer Network and Authorized Service Points. All copyrights are property of Automobili Lamborghini S.p.A based on copyright law. All of the PDF chapters in the WEB workshop manuals described below are based on information available at the time of publication. The company reserves the right to make updates and modifications. The following are prohibited: reprinting, reproduction, forwarding to unauthorized people and/or third parties, and translation, including partial, without written authorization from Automobili Lamborghini S.p.A.

L) Assembling the door seals

1. Position a strip of butyl inside the ducts where the seals are to be inserted.
2. Position the front seal (**A-Fig.22**), the rear seal (**B-Fig.23a**) and the upper seal (**C-Fig.23a**) inside the ducts.

- Assemble the weatherstrip **(Point G)**.
- Assemble the door glass **(Point M)**.
- Assemble the 3 housing panels (large + small + car hi-fi system loudspeaker) **(Point A)**.
- Assemble the door cover **(086805)**.
- Assemble the car hi-fi system loudspeaker **(097505)**.

Fig.23

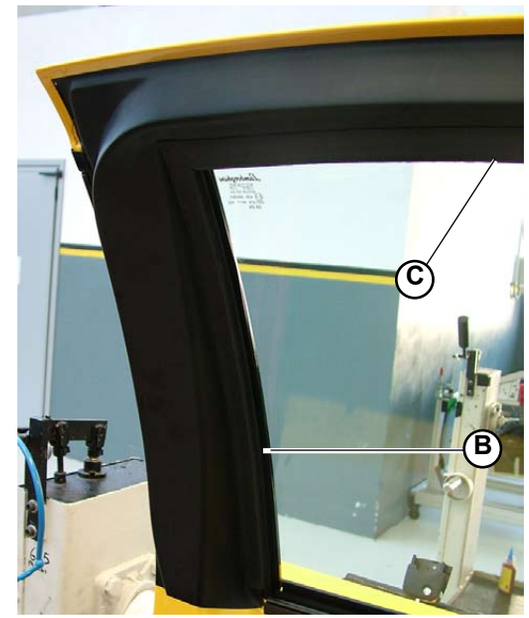

Fig.23a

® Automobili Lamborghini S.p.A.
The information and procedures published below are strictly confidential and exclusively for the Lamborghini Dealer Network and Authorized Service Points. All copyrights are property of Automobili Lamborghini S.p.A based on copyright law. All of the PDF chapters in the WEB workshop manuals described below are based on information available at the time of publication. The company reserves the right to make updates and modifications. The following are prohibited: reprinting, reproduction, forwarding to unauthorized people and/or third parties, and translation, including partial, without written authorization from Automobili Lamborghini S.p.A.

M) Assembling the door pillar

1. Place silicone on the internal part of the door pillar.
2. Insert the pillar's 2 slots (**A-Fig.24**) onto the couplings on the door.
3. Hold the pillar in place (**B-Fig.25**) with tape (**C-Fig.25**) so that the silicone fully adheres.

- Assemble the weatherstrip **(Point G)**.
- Assemble the door glass **(084705)**.
- Assemble the 3 housing panels (large + small + car hi-fi system loudspeaker) **(Point A)**.
- Assemble the door cover **(086805)**.
- Assemble the car hi-fi system loudspeaker **(097505)**.

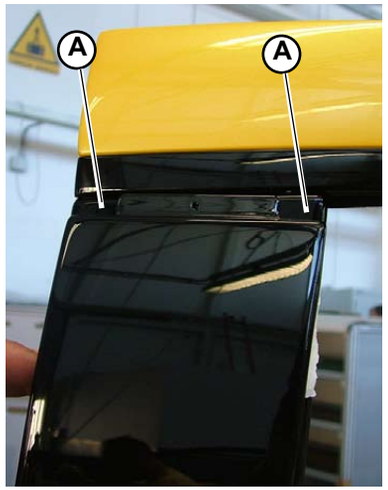

Fig.24

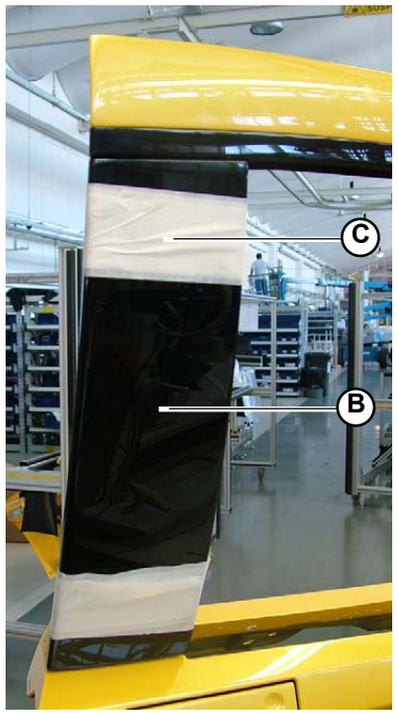

Fig.25

® Automobili Lamborghini S.p.A.
The information and procedures published below are strictly confidential and exclusively for the Lamborghini Dealer Network and Authorized Service Points. All copyrights are property of Automobili Lamborghini S.p.A based on copyright law. All of the PDF chapters in the WEB workshop manuals described below are based on information available at the time of publication. The company reserves the right to make updates and modifications. The following are prohibited: reprinting, reproduction, forwarding to unauthorized people and/or third parties, and translation, including partial, without written authorization from Automobili Lamborghini S.p.A.

This section explains how to disassemble:

A) Windscreen
B) Rear window
C) Rear side window
E) Engine hood window

® Automobili Lamborghini S.p.A.
The information and procedures published below are strictly confidential and exclusively for the Lamborghini Dealer Network and Authorized Service Points. All copyrights are property of Automobili Lamborghini S.p.A based on copyright law. All of the PDF chapters in the WEB workshop manuals described below are based on information available at the time of publication. The company reserves the right to make updates and modifications. The following are prohibited: reprinting, reproduction, forwarding to unauthorized people and/or third parties, and translation, including partial, without written authorization from Automobili Lamborghini S.p.A.

A) Disassembling the windscreen

1. Disconnect the antenna connector.
2. Remove the seal around the perimeter of the windscreen.
3. Using a specific tool, remove the silicone around the perimeter of the windscreen. Ensure the Prime sticking the windscreen to the body is removed.
4. Using suction cups, remove the windscreen (**A-Fig.1**).

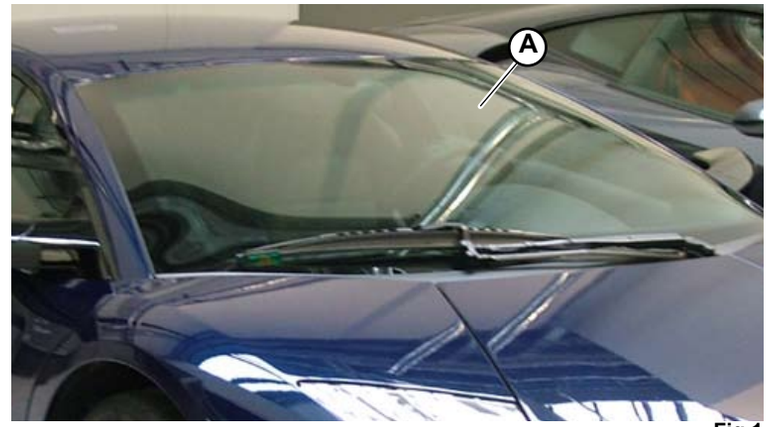

Fig.1

Always take the utmost care not to damage or scratch the windscreen during disassembly.

® Automobili Lamborghini S.p.A.
The information and procedures published below are strictly confidential and exclusively for the Lamborghini Dealer Network and Authorized Service Points. All copyrights are property of Automobili Lamborghini S.p.A based on copyright law. All of the PDF chapters in the WEB workshop manuals described below are based on information available at the time of publication. The company reserves the right to make updates and modifications. The following are prohibited: reprinting, reproduction, forwarding to unauthorized people and/or third parties, and translation, including partial, without written authorization from Automobili Lamborghini S.p.A.

B) Disassembling the rear window

1. Using a suitable tool, remove the silicone around the perimeter of the window. Ensure that the Prime sticking the window to the body is removed.
2. Remove the rear window (**A-Fig.2**).

Always take the utmost care not to damage or scratch the rear window during disassembly.

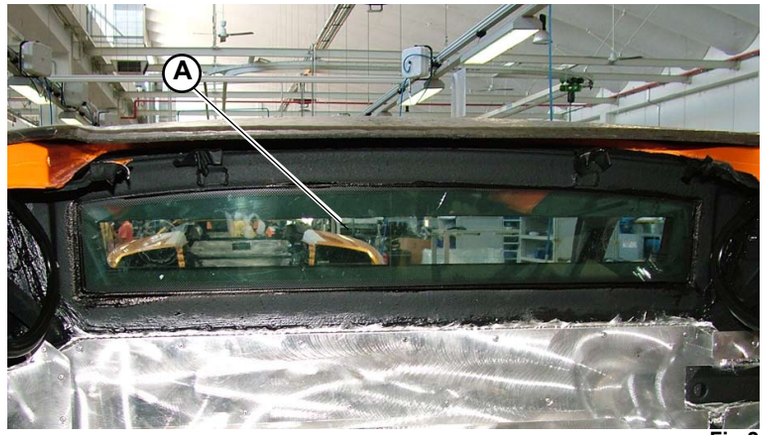

Fig.2

® Automobili Lamborghini S.p.A.
The information and procedures published below are strictly confidential and exclusively for the Lamborghini Dealer Network and Authorized Service Points. All copyrights are property of Automobili Lamborghini S.p.A based on copyright law. All of the PDF chapters in the WEB workshop manuals described below are based on information available at the time of publication. The company reserves the right to make updates and modifications. The following are prohibited: reprinting, reproduction, forwarding to unauthorized people and/or third parties, and translation, including partial, without written authorization from Automobili Lamborghini S.p.A.

C) Disassembling the rear side window

1. Using a suitable tool, remove the silicone around the perimeter of the rear side window. Ensure that the Prime sticking the rear side window to the body is removed.
2. Remove the rear side window (**A-Fig.3**).

STOP Always take the utmost care not to damage or scratch the rear side window during disassembly.

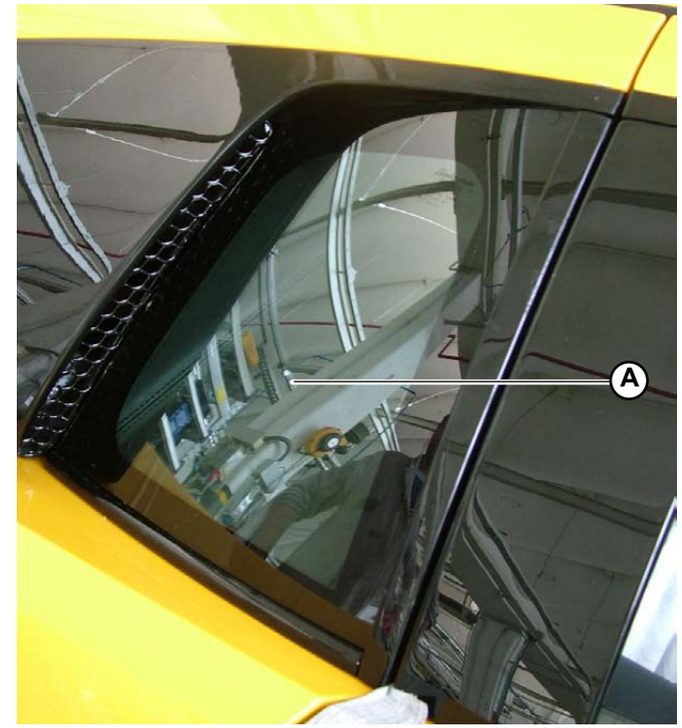

Fig.3

® Automobili Lamborghini S.p.A.
The information and procedures published below are strictly confidential and exclusively for the Lamborghini Dealer Network and Authorized Service Points. All copyrights are property of Automobili Lamborghini S.p.A based on copyright law. All of the PDF chapters in the WEB workshop manuals described below are based on information available at the time of publication. The company reserves the right to make updates and modifications. The following are prohibited: reprinting, reproduction, forwarding to unauthorized people and/or third parties, and translation, including partial, without written authorization from Automobili Lamborghini S.p.A.

D) Disassembling the engine hood window

1. Using the special tool, remove the silicone around the perimeter of the window. Ensure that the Prime sticking the window to the engine hood is removed.
2. Using suction cups, remove the engine hood window (**Fig.4**).

STOP **Always take the utmost care not to damage or scratch the glass during disassembly.**

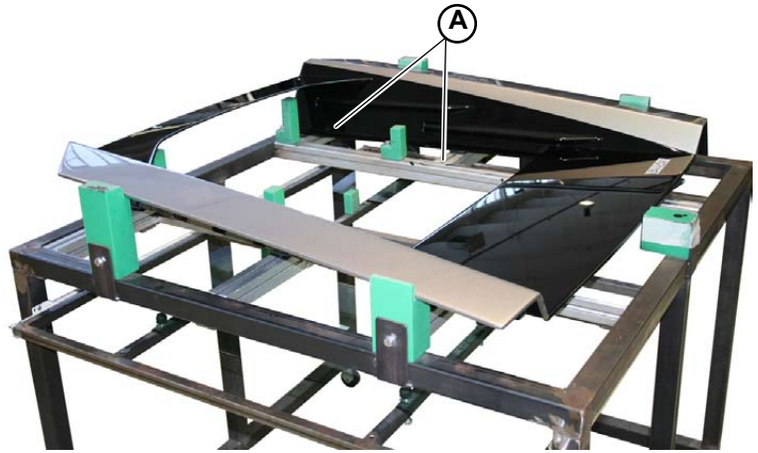

Fig.4

® Automobili Lamborghini S.p.A.
The information and procedures published below are strictly confidential and exclusively for the Lamborghini Dealer Network and Authorized Service Points. All copyrights are property of Automobili Lamborghini S.p.A based on copyright law. All of the PDF chapters in the WEB workshop manuals described below are based on information available at the time of publication. The company reserves the right to make updates and modifications. The following are prohibited: reprinting, reproduction, forwarding to unauthorized people and/or third parties, and translation, including partial, without written authorization from Automobili Lamborghini S.p.A.

This section explains how to assemble:

A) Windscreen
B) Rear window
C) Rear side window
D) Engine hood window

® Automobili Lamborghini S.p.A.
The information and procedures published below are strictly confidential and exclusively for the Lamborghini Dealer Network and Authorized Service Points. All copyrights are property of Automobili Lamborghini S.p.A based on copyright law. All of the PDF chapters in the WEB workshop manuals described below are based on information available at the time of publication. The company reserves the right to make updates and modifications. The following are prohibited: reprinting, reproduction, forwarding to unauthorized people and/or third parties, and translation, including partial, without written authorization from Automobili Lamborghini S.p.A.

A) Assembling the windscreen

- Wear cotton gloves (to avoid direct contact with the windscreen surface), remove the windscreen and inspect visually to ensure it is not damaged.

1. Clean the surface of the car body involved in the windscreen gluing procedure with a cloth and VITREX.
2. Protect the car body near the windscreen housing with tape.
3. Clean the surface of the windscreen where the primer will be applied using a cloth and VITREX.
4. Using the special pad, apply the BETAWIPE WP 4604 activator with the yellow cap (**A1-Fig.1**) onto the windscreen surface where the primer will be applied.
5. Using the special pad, apply BETAPRIME 5100 primer with the green cap (**A2-Fig.1**) to the windscreen where the adhesive will be applied.
6. Using the special pad, apply the BETAPRIME 5404 primer with the red cap (**A3-Fig.1**) to the windscreen where the adhesive will be applied.

Fig.1

Shake the Primer before use and spread the adhesive after at least 30 seconds and no later than 8 hours afterwards.

5. Position the rubber spacers (**B-Fig.2**) on the four sides of the body supporting the windscreen (the rubber spacers are 5 mm high).

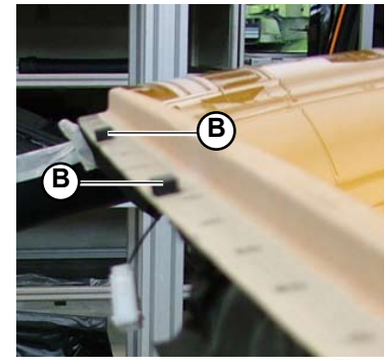

Fig.2

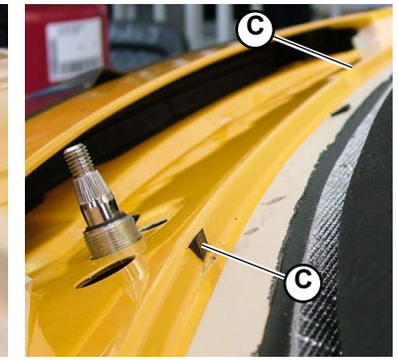

Fig.3

The top and sides of the rubber spacers do not need to be reduced or cut to change the height of the windscreen. However, cut the bottom of the rubber spacers (C-Fig.3) to perfectly align the glass.

6. Apply BETASEAL HV3 adhesive to the body in the windscreen housing area using the shaped nozzle. Spread the adhesive evenly.
7. Position the windscreen (**D-Fig.4**) in its housing no later than 10 minutes after applying the adhesive.

The entire length of the top edge of the windscreen must be 3 mm from the top edge of the car body.

8. Remove any excess adhesive and clean the windscreen with a cloth and VITREX.
9. Fill in the sides and check for correct alignment.

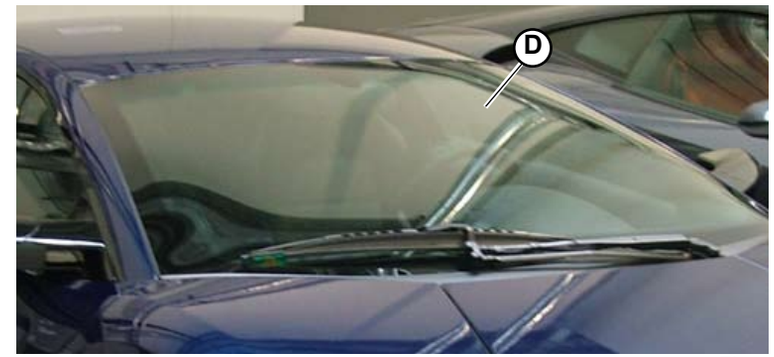

Fig.4

® Automobili Lamborghini S.p.A.
The information and procedures published below are strictly confidential and exclusively for the Lamborghini Dealer Network and Authorized Service Points. All copyrights are property of Automobili Lamborghini S.p.A based on copyright law. All of the PDF chapters in the WEB workshop manuals described below are based on information available at the time of publication. The company reserves the right to make updates and modifications. The following are prohibited: reprinting, reproduction, forwarding to unauthorized people and/or third parties, and translation, including partial, without written authorization from Automobili Lamborghini S.p.A.

B) Assembling the rear window

- Wear cotton gloves (to avoid direct contact with the rear window's surface).

1. Clean the surface of the body where the rear window will be glued using a cloth and VITREX.
2. Protect the body near the rear window's housing with tape.
3. Clean the surface of the rear window where it will be glued using a cloth and VITREX.
4. Apply the BETAPRIME primer with the yellow cap (**A-Fig.5**) along the internal edge of the rear window using the special pad.

The pad must be thrown away after use. The pad may not be used to apply different types of products.

5. Apply the BETAPRIME primer with the green cap (**B-Fig.6**) along the internal edge of the rear window (where the BETAPRIME with the yellow cap was applied) using the special pad.

The pad must be thrown away after use. The pad may not be used to apply different types of products.

6. Apply the BETAPRIME primer with the red cap (**C-Fig.7**) along the edge of the body where the rear window will be applied using the special pad.

Fig.5

Fig.6

Fig.7

® Automobili Lamborghini S.p.A.
The information and procedures published below are strictly confidential and exclusively for the Lamborghini Dealer Network and Authorized Service Points. All copyrights are property of Automobili Lamborghini S.p.A based on copyright law. All of the PDF chapters in the WEB workshop manuals described below are based on information available at the time of publication. The company reserves the right to make updates and modifications. The following are prohibited: reprinting, reproduction, forwarding to unauthorized people and/or third parties, and translation, including partial, without written authorization from Automobili Lamborghini S.p.A.

7. Assemble a suitable support (**D-Fig.8**) in the passenger compartment to hold the rear window in place.
8. Using double-sided tape, attach the 6 shims to the inside of the window:
- 4 at the corners
- 2 at the midpoint at the top and bottom

Fig.8

9. Distribute the BETASEAL 1965 silicone (**E-Fig.9**) along the internal edge of the rear window using the provided spout (**F-Fig.10**) preformed by means of the special pliers (**G-Fig.10**) with an opening 10 mm high and 5 mm wide.

Fig.9

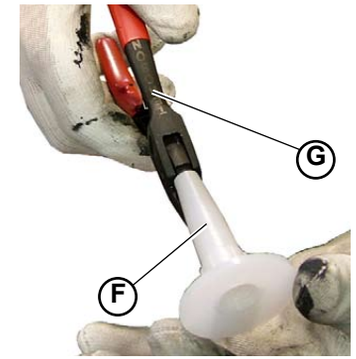

Fig.10

10. Position the rear window (**H-Fig.11**), taking care that the silicone does not internally extend beyond the edge.
11. After the window has been centered, press the edges so that the silicone adheres well.
12. Hold the rear window in place on the car using a suitable support.

Fig.11

® Automobili Lamborghini S.p.A.
The information and procedures published below are strictly confidential and exclusively for the Lamborghini Dealer Network and Authorized Service Points. All copyrights are property of Automobili Lamborghini S.p.A based on copyright law. All of the PDF chapters in the WEB workshop manuals described below are based on information available at the time of publication. The company reserves the right to make updates and modifications. The following are prohibited: reprinting, reproduction, forwarding to unauthorized people and/or third parties, and translation, including partial, without written authorization from Automobili Lamborghini S.p.A.

C) Assembling the rear side window

- Wear cotton gloves (to avoid direct contact with the rear side window's surface).

1. Clean the surface of the body where the rear side window will be glued using a cloth and VITREX.
2. Protect the body near the rear side window's housing with tape.
3. Clean the surface of the rear side window where it will be glued using a cloth and VITREX.
4. Apply the BETAPRIME primer with the yellow cap (**A-Fig.12**) along the internal edge of the rear side window using the special pad.

The pad must be thrown away after use. The pad may not be used to apply different types of products.

5. Apply the BETAPRIME primer with the green cap (**B-Fig.13**) along the internal edge of the rear side window (where the BETAPRIME with the yellow cap was applied) using the special pad.

The pad must be thrown away after use. The pad may not be used to apply different types of products.

5. Apply the BETAPRIME primer with the red cap (**D-Fig.14**) along the edge of the body (**C-Fig.15**) where the rear side window will be applied using the special pad.

Fig.12

Fig.13

Fig.14

Fig.15

® Automobili Lamborghini S.p.A.
The information and procedures published below are strictly confidential and exclusively for the Lamborghini Dealer Network and Authorized Service Points. All copyrights are property of Automobili Lamborghini S.p.A based on copyright law. All of the PDF chapters in the WEB workshop manuals described below are based on information available at the time of publication. The company reserves the right to make updates and modifications. The following are prohibited: reprinting, reproduction, forwarding to unauthorized people and/or third parties, and translation, including partial, without written authorization from Automobili Lamborghini S.p.A.

7. Distribute the BETASEAL 1965 silicone (**E-Fig.16**) along the inside edge of the rear side window using the provided spout (**F-Fig.17**) preformed by means of the special pliers (**G-Fig.17**) with an opening 10 mm high and 5 mm wide.
8. Position the rear side window (**H-Fig.18**) inside previously-assembled housings, taking care that the silicone does not internally extend beyond the edge.
9. After verifying the rear side window's correct position, hold it in place on the car using the special cloth tape.

Fig.16

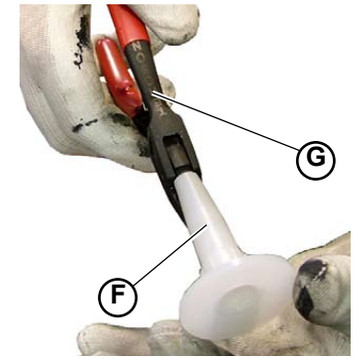

Fig.17

Fig.18

® Automobili Lamborghini S.p.A.
The information and procedures published below are strictly confidential and exclusively for the Lamborghini Dealer Network and Authorized Service Points. All copyrights are property of Automobili Lamborghini S.p.A based on copyright law. All of the PDF chapters in the WEB workshop manuals described below are based on information available at the time of publication. The company reserves the right to make updates and modifications. The following are prohibited: reprinting, reproduction, forwarding to unauthorized people and/or third parties, and translation, including partial, without written authorization from Automobili Lamborghini S.p.A.

D) Assembling the engine hood window

- Wear cotton gloves (to avoid direct contact with the window's surface).

1. Clean the surface of the engine hood involved in the window gluing procedure with a cloth and VITREX.
2. Clean the surface of the window where it will be glued using a cloth and VITREX.
3. Apply the BETAPRIME primer with the yellow cap (**A-Fig.19**) along the internal edge of the window using the special pad.

The pad must be thrown away after use. The pad may not be used to apply different types of products.

4. Apply the BETAPRIME primer with the green cap (**B-Fig.20**) along the internal edge of the window (where the BETAPRIME with the yellow cap was applied) using the special pad.

The pad must be thrown away after use. The pad may not be used to apply different types of products.

5. Apply the BETAPRIME primer with the red cap (**C-Fig.21**) along the edge of the engine hood (**Fig.22**) where the window will be applied using the special pad.

Fig.19

Fig.20

Fig.21

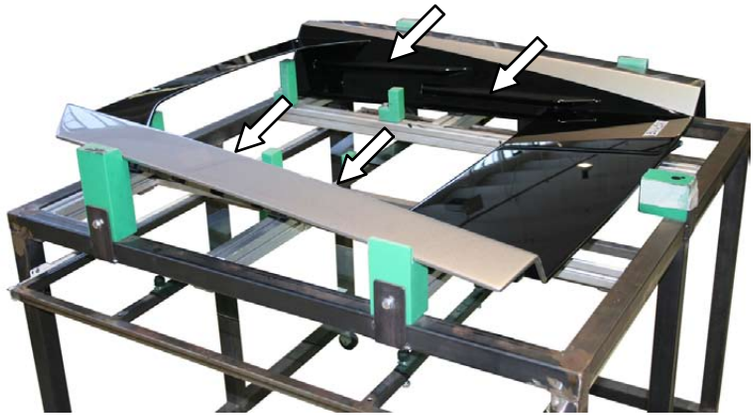
Fig.22

® Automobili Lamborghini S.p.A.
The information and procedures published below are strictly confidential and exclusively for the Lamborghini Dealer Network and Authorized Service Points. All copyrights are property of Automobili Lamborghini S.p.A based on copyright law. All of the PDF chapters in the WEB workshop manuals described below are based on information available at the time of publication. The company reserves the right to make updates and modifications. The following are prohibited: reprinting, reproduction, forwarding to unauthorized people and/or third parties, and translation, including partial, without written authorization from Automobili Lamborghini S.p.A.

6. Secure the shims (**D-Fig.23**) along the inside edge of the engine.

Fig.23

7. Distribute the BETASEAL 1965 silicone along the internal edge of the engine hood (**E-Fig.24**).

STOP **If application must be interrupted (e.g.: to replace the silicone cartridge), do not allow gaps of air to form in the silicone between the 2 applications.**

8. Position the window on the engine hood, taking care that the silicone does not internally extend beyond the edge.

Position both pieces of glass flush with their respective supports (Fig. 25)

Fig.24

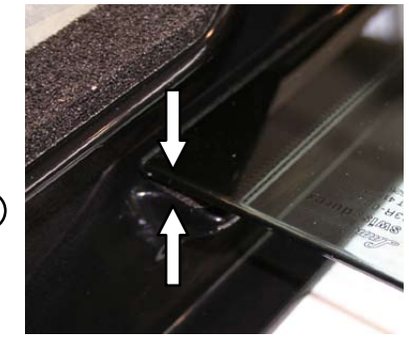

Fig.25

9. Check the distance between the window and the internal edges of the engine hood: then secure the window onto the engine hood using cloth tape.

10. Position weights along the edge of the window so that the silicone adheres well between all of the various surfaces (**Fig.26**).

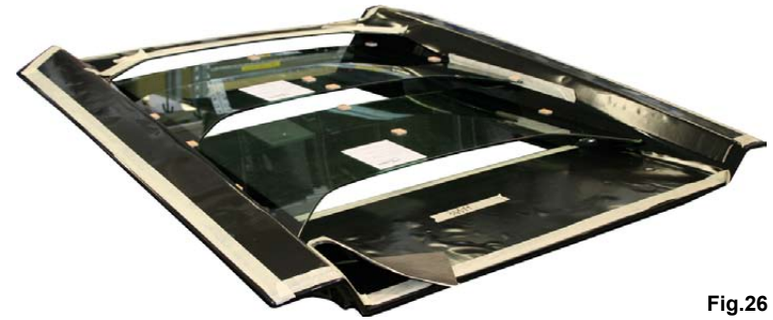

Fig.26

® Automobili Lamborghini S.p.A.
The information and procedures published below are strictly confidential and exclusively for the Lamborghini Dealer Network and Authorized Service Points. All copyrights are property of Automobili Lamborghini S.p.A based on copyright law. All of the PDF chapters in the WEB workshop manuals described below are based on information available at the time of publication. The company reserves the right to make updates and modifications. The following are prohibited: reprinting, reproduction, forwarding to unauthorized people and/or third parties, and translation, including partial, without written authorization from Automobili Lamborghini S.p.A.

Glass disassembly

Preliminary operations

- Remove the side car hi-fi system loudspeaker **(097503)**.
- Disassemble the door cover **(083703)**.
- Remove the 3 housing panels **(083703)**.
- Disassemble the power window assembly **(083703)**.

Glass disassembly

1. Detach the internal seal (**A-Fig.1**) from the glass.
2. Remove the glass (**B-Fig.1**).

STOP **Always take the utmost care not to damage or scratch the glass during disassembly.**

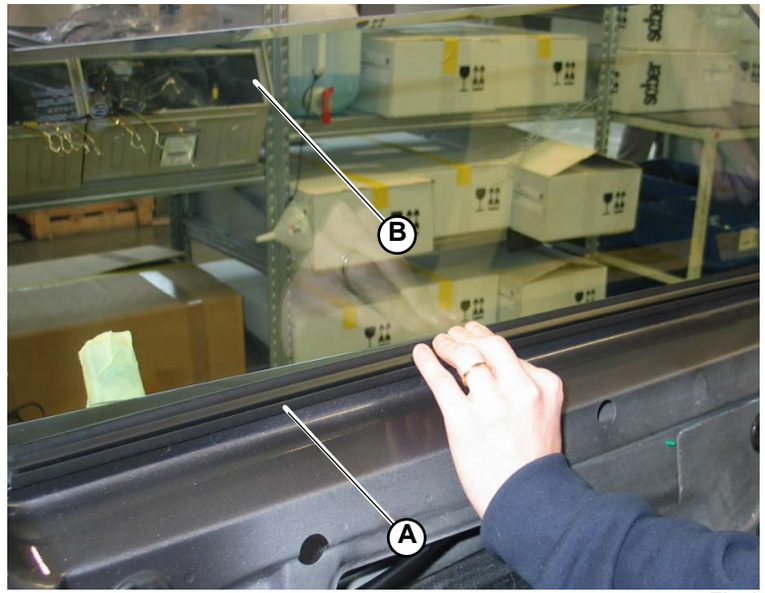

Fig.1

® Automobili Lamborghini S.p.A.
The information and procedures published below are strictly confidential and exclusively for the Lamborghini Dealer Network and Authorized Service Points. All copyrights are property of Automobili Lamborghini S.p.A based on copyright law. All of the PDF chapters in the WEB workshop manuals described below are based on information available at the time of publication. The company reserves the right to make updates and modifications. The following are prohibited: reprinting, reproduction, forwarding to unauthorized people and/or third parties, and translation, including partial, without written authorization from Automobili Lamborghini S.p.A.

Glass assembly

1. Insert the glass (**A-Fig.1**) inside the door and allow it to slide along the guides.
2. Assemble the internal seal (**B-Fig.1**).

- Assemble the power window assembly **(083705)**.
- Assemble the 3 housing panels **(083705)**.
- Assemble the door cover **(083705)**.
- Assemble the side car hi-fi system loudspeaker **(097505)**.

STOP **Always take the utmost care not to damage or scratch the glass during disassembly.**

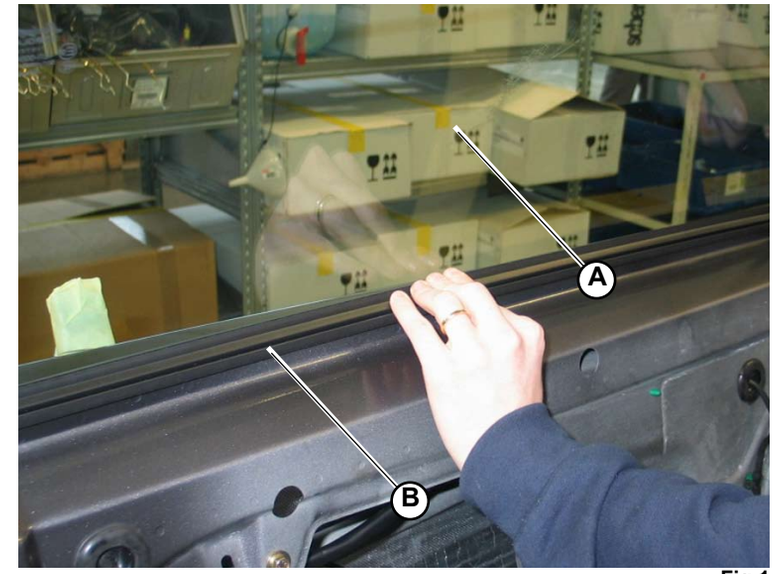

Fig.1

® Automobili Lamborghini S.p.A.
The information and procedures published below are strictly confidential and exclusively for the Lamborghini Dealer Network and Authorized Service Points. All copyrights are property of Automobili Lamborghini S.p.A based on copyright law. All of the PDF chapters in the WEB workshop manuals described below are based on information available at the time of publication. The company reserves the right to make updates and modifications. The following are prohibited: reprinting, reproduction, forwarding to unauthorized people and/or third parties, and translation, including partial, without written authorization from Automobili Lamborghini S.p.A.

This section explains how to disassemble:
A) Disassembling the right side member on the body
B) Disassembling the left side member on the body

A) Disassembling the right side member on the body

Preliminary operations

- Remove the rear seat cover (bottom) **(086803)**.

1. Unscrew the screws securing the body side member (**A-Fig.1**) to the car using the free space created by the rear seat cover.

- Raise the car on the car lift **(000000).**
- Remove the 2 wheels on the right flank (front and rear wheels) **(060103)**.
- Remove the rear element of the front wheel arch **(082103)**.
- Remove the front element of the rear wheel arch **(082103)**.

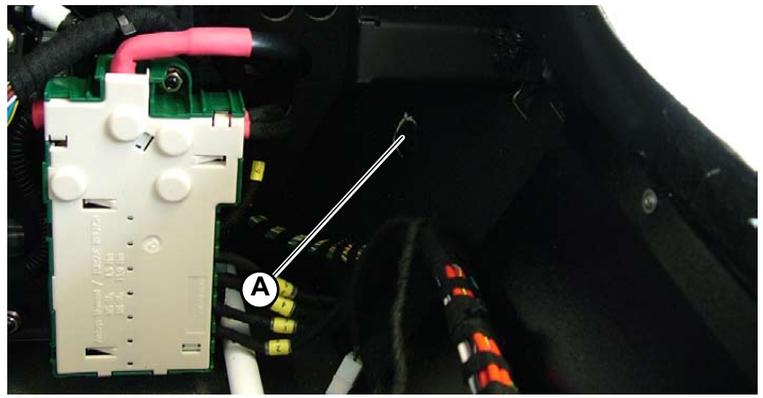

Fig.1

Side member disassembly

2. Unscrew the 2 screws (**B-Fig.2**) securing the conveyor to the side member, using the free space created by the rear element of the front wheel arch.

3. Unscrew the screw (**C-Fig.2**) securing the conveyor to the oil radiator, using the free space created by the front element of the rear wheel arch.

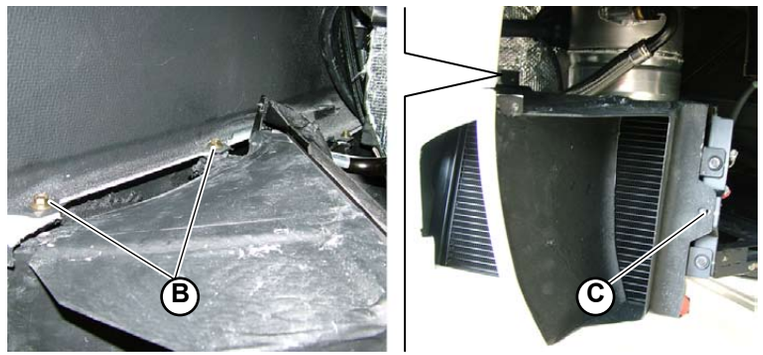

Fig.2

® Automobili Lamborghini S.p.A.
The information and procedures published below are strictly confidential and exclusively for the Lamborghini Dealer Network and Authorized Service Points. All copyrights are property of Automobili Lamborghini S.p.A based on copyright law. All of the PDF chapters in the WEB workshop manuals described below are based on information available at the time of publication. The company reserves the right to make updates and modifications. The following are prohibited: reprinting, reproduction, forwarding to unauthorized people and/or third parties, and translation, including partial, without written authorization from Automobili Lamborghini S.p.A.

4. Unscrew the screw (**D-Fig.3**) at the front of the conveyor.

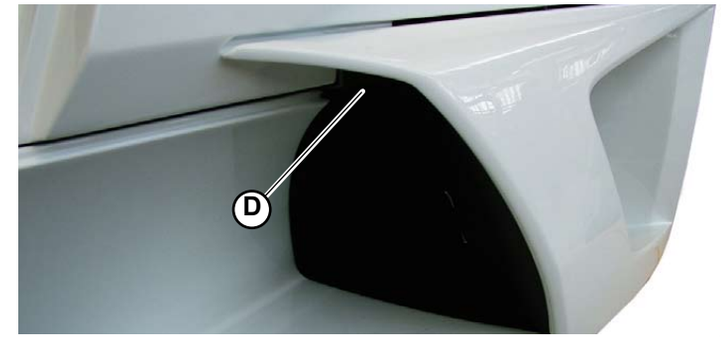

Fig.3

5. Unscrew the screw (**E-Fig.4**) on the lower part of the conveyor and remove the conveyor itself.

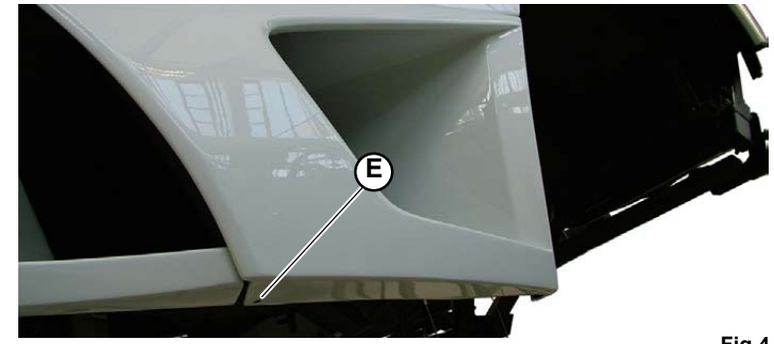

Fig.4

6. Remove the panel with the words “MURCIÉLAGO” located above the side member.

7. Unscrew the 4 screws (**F-Fig.5**) on the upper part of the side member.

8. Unscrew the 4 screws (**G-Fig.5**) on the lower part of the side member.

9. Unscrew the screw (**H-Fig.5**) at the front of the side member.

10 Remove the side member.

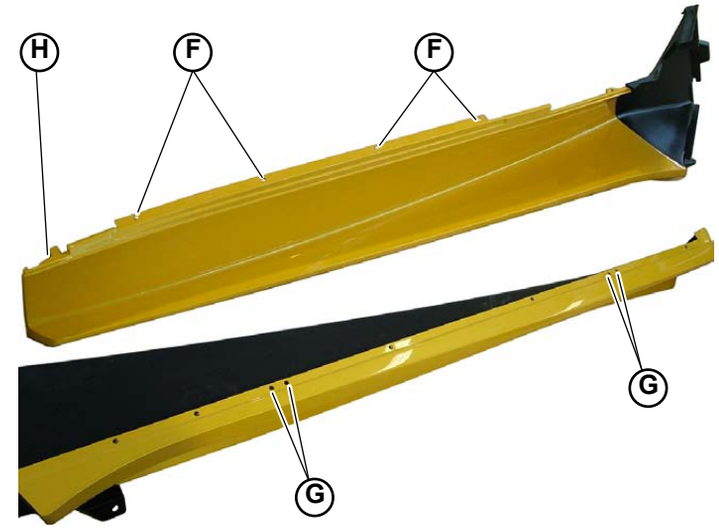

Fig.5

® Automobili Lamborghini S.p.A.
The information and procedures published below are strictly confidential and exclusively for the Lamborghini Dealer Network and Authorized Service Points. All copyrights are property of Automobili Lamborghini S.p.A based on copyright law. All of the PDF chapters in the WEB workshop manuals described below are based on information available at the time of publication. The company reserves the right to make updates and modifications. The following are prohibited: reprinting, reproduction, forwarding to unauthorized people and/or third parties, and translation, including partial, without written authorization from Automobili Lamborghini S.p.A.

B) Disassembling the left side member on the body

Preliminary operations

- Raise the car on the car lift **(000000).**
- Remove the 2 wheels on the left flank (front and rear wheels) **(060103)**.
- Remove the rear element of the front wheel arch **(082103)**.
- Remove the front element of the rear wheel arch **(082103)**.

Side member disassembly

1. Unscrew the 3 screws (**A-Fig.6**) securing the rear part of the side member, using the free space created by the rear element of the wheel arch.

Fig.6

2. Unscrew the screw (**B-Fig.7**) securing the rear part of the side member to the side member itself.

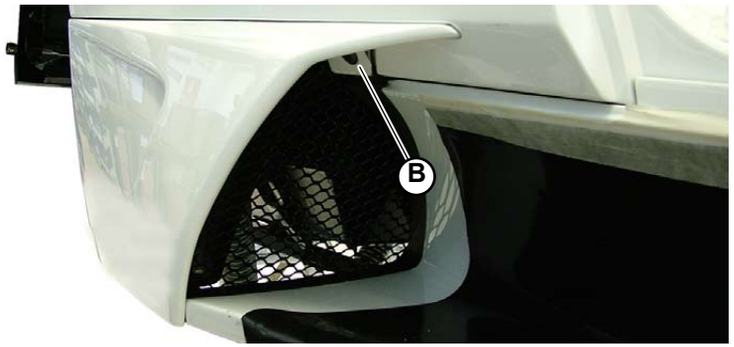

Fig.7

3. Unscrew the screw (**C-Fig.8**) on the lower part and remove the rear part of the side member (**D-Fig.8**).

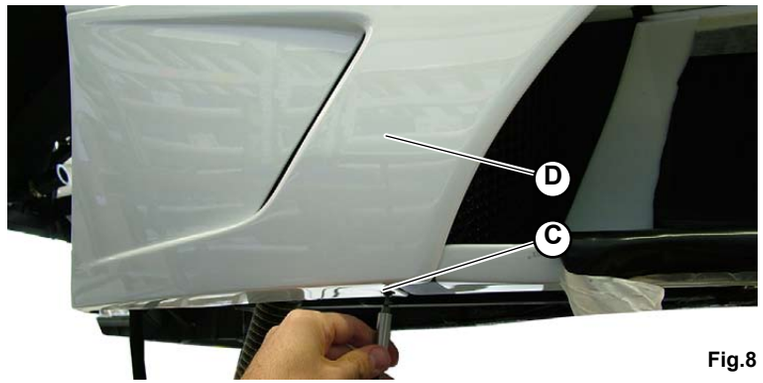

Fig.8

® Automobili Lamborghini S.p.A.
The information and procedures published below are strictly confidential and exclusively for the Lamborghini Dealer Network and Authorized Service Points. All copyrights are property of Automobili Lamborghini S.p.A based on copyright law. All of the PDF chapters in the WEB workshop manuals described below are based on information available at the time of publication. The company reserves the right to make updates and modifications. The following are prohibited: reprinting, reproduction, forwarding to unauthorized people and/or third parties, and translation, including partial, without written authorization from Automobili Lamborghini S.p.A.

4. Disconnect the pipe (**E-Fig.9**) from the air conveyor (by means of the clamp) and remove it from the engine compartment.

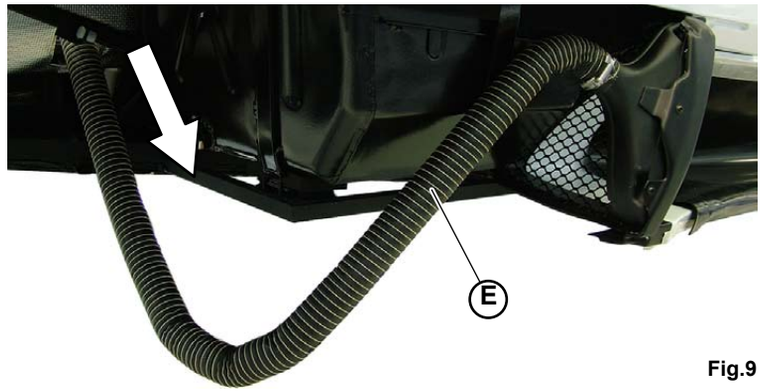

Fig.9

5. Remove the panel with the words “MURCIÉLAGO” located above the side member.

6. Unscrew the 4 screws (**F-Fig.10**) on the upper part of the side member.

7. Unscrew the 4 screws (**G-Fig.10**) on the lower part of the side member.

8. Unscrew the screw (**H-Fig.10**) at the front of the side member.

9. Remove the side member.

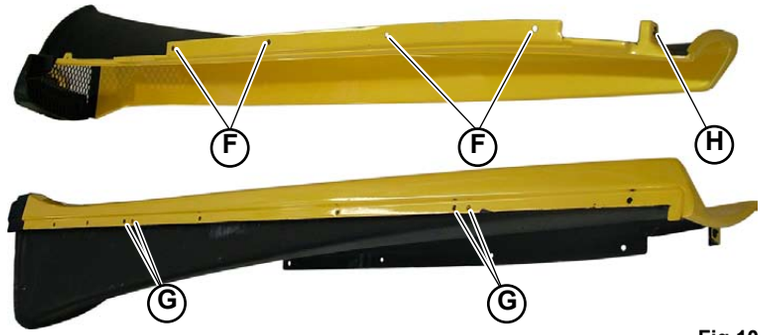

Fig.10

® Automobili Lamborghini S.p.A.
The information and procedures published below are strictly confidential and exclusively for the Lamborghini Dealer Network and Authorized Service Points. All copyrights are property of Automobili Lamborghini S.p.A based on copyright law. All of the PDF chapters in the WEB workshop manuals described below are based on information available at the time of publication. The company reserves the right to make updates and modifications. The following are prohibited: reprinting, reproduction, forwarding to unauthorized people and/or third parties, and translation, including partial, without written authorization from Automobili Lamborghini S.p.A.

This section explains how to assemble:
A) Assembling the right side member on the body
B) Assembling the left side member on the body

A) Assembling the right side member on the body

1. Tighten the 4 screws (**A-Fig.1**) on the upper part of the side member.
2. Tighten the 4 screws (**B-Fig.1**) on the lower part of the side member onto the 2 relative support brackets.
3. Tighten the screw (**C-Fig.1**) at the front of the side member.
4. Attach the panel with the words “MURCIÉLAGO” above the side member.

- Assemble the oil radiator **(011705)**.

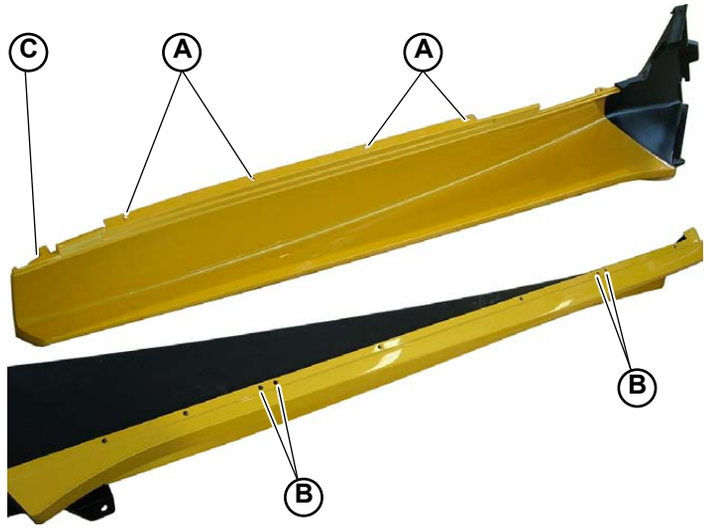

Fig.1

5. Secure the air conveyor onto the side member using the 2 internal screws (**D-Fig.2**).
6. Tighten the screw (**E-Fig.2**) to secure the conveyor onto the oil radiator.

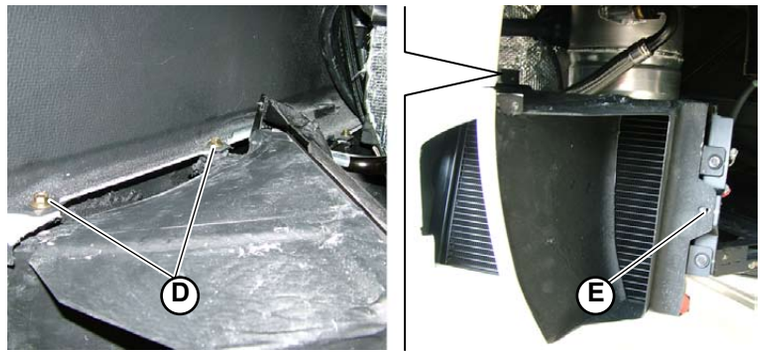

Fig.2

® Automobili Lamborghini S.p.A.
The information and procedures published below are strictly confidential and exclusively for the Lamborghini Dealer Network and Authorized Service Points. All copyrights are property of Automobili Lamborghini S.p.A based on copyright law. All of the PDF chapters in the WEB workshop manuals described below are based on information available at the time of publication. The company reserves the right to make updates and modifications. The following are prohibited: reprinting, reproduction, forwarding to unauthorized people and/or third parties, and translation, including partial, without written authorization from Automobili Lamborghini S.p.A.

7. Tighten the screw (**F-Fig.3**) at the front of the conveyor.

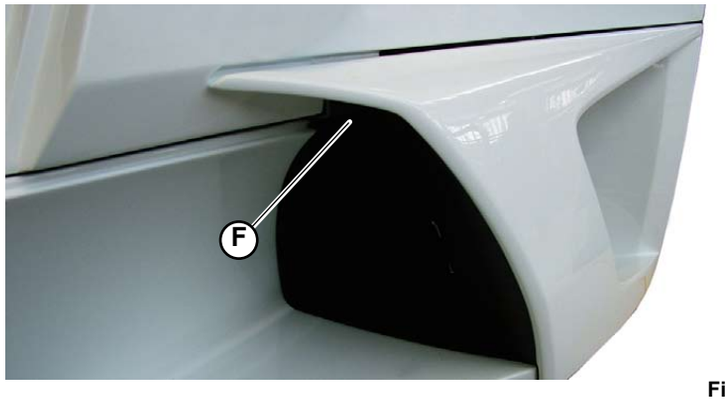

Fig.3

8. Tighten the screw (**G-Fig.4**) on the lower part of the conveyor.

- Assemble the front element of the rear wheel arch **(082105)**.
- Assemble the rear element of the front wheel arch **(082105)**.
- Assemble the 2 wheels on the right flank (front and rear wheels) **(060105)**.

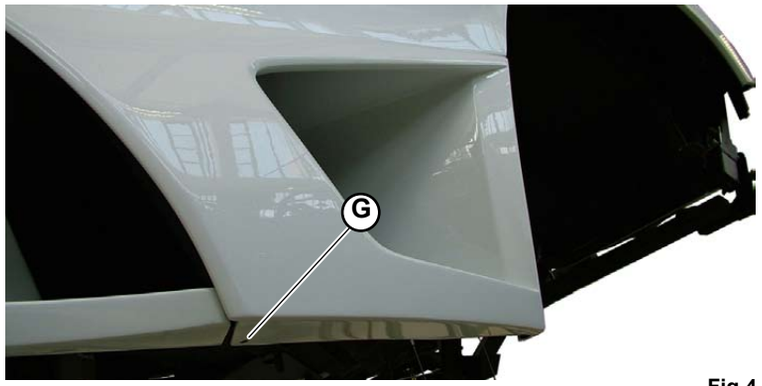

Fig.4

9. Tighten the screws securing the body side member (**H-Fig.5**) to the car using the free space created by the rear seat cover.

- Assemble the rear seat cover (bottom) **(086805)**.

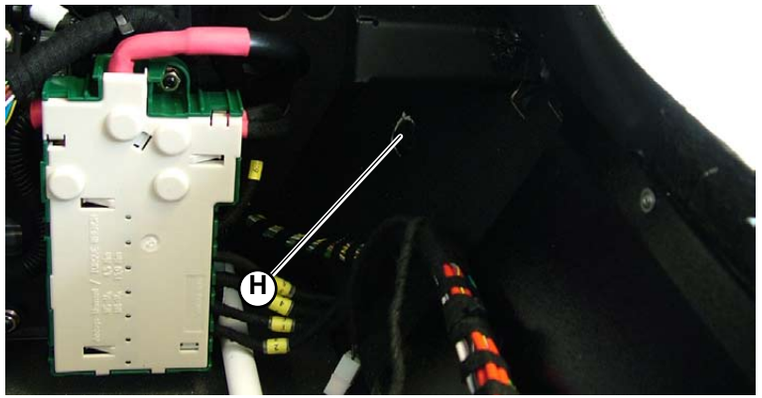

Fig.5

® Automobili Lamborghini S.p.A.
The information and procedures published below are strictly confidential and exclusively for the Lamborghini Dealer Network and Authorized Service Points. All copyrights are property of Automobili Lamborghini S.p.A based on copyright law. All of the PDF chapters in the WEB workshop manuals described below are based on information available at the time of publication. The company reserves the right to make updates and modifications. The following are prohibited: reprinting, reproduction, forwarding to unauthorized people and/or third parties, and translation, including partial, without written authorization from Automobili Lamborghini S.p.A.

B) Assembling the left side member on the body

1. Tighten the 4 screws (**A-Fig.6**) on the upper part of the side member.
2. Tighten the 4 screws (**B-Fig.6**) on the lower part of the side member onto the 2 relative support brackets.
3. Tighten the screw (**C-Fig.6**) at the front of the side member.
4. Attach the panel with the words “MURCIÉLAGO” above the side member.

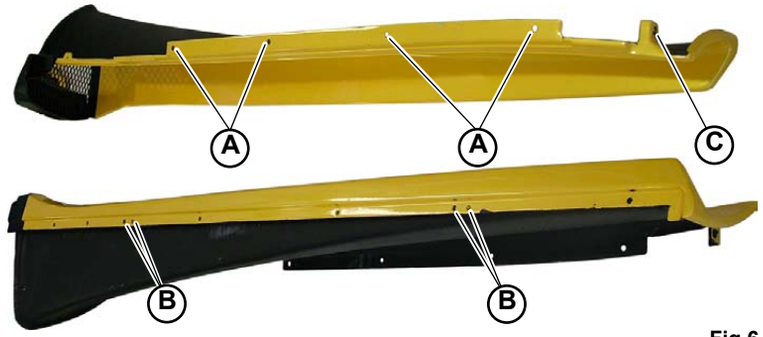

Fig.6

5. Connect the pipe (**D-Fig.7**) onto the air conveyor (by means of the clamp) and insert it into the engine compartment through the provided hole.

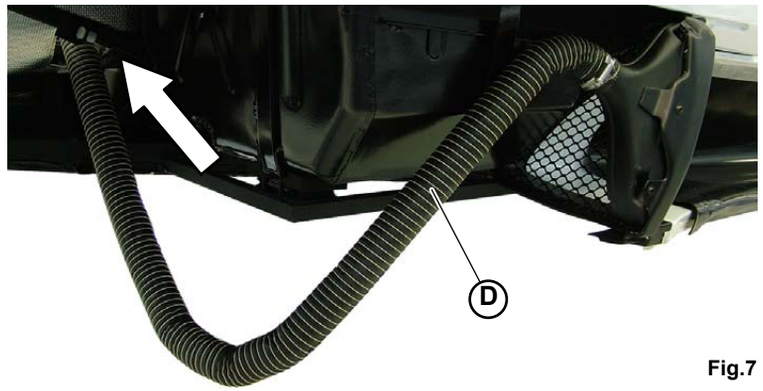

Fig.7

6. Position the rear part of the side member and secure it using the 3 internal screws (**E-Fig.8**).

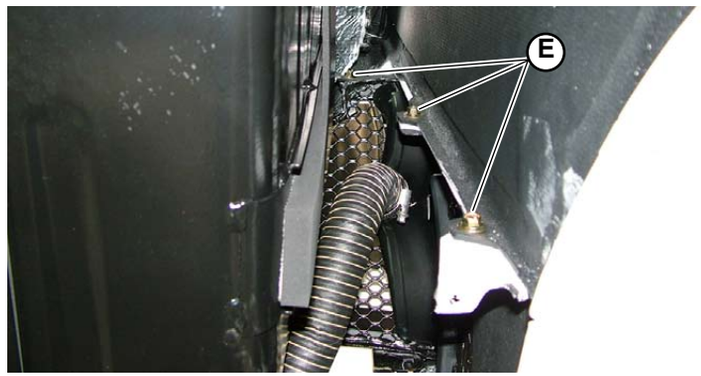

Fig.8

® Automobili Lamborghini S.p.A.
The information and procedures published below are strictly confidential and exclusively for the Lamborghini Dealer Network and Authorized Service Points. All copyrights are property of Automobili Lamborghini S.p.A based on copyright law. All of the PDF chapters in the WEB workshop manuals described below are based on information available at the time of publication. The company reserves the right to make updates and modifications. The following are prohibited: reprinting, reproduction, forwarding to unauthorized people and/or third parties, and translation, including partial, without written authorization from Automobili Lamborghini S.p.A.

7. Tighten the screw (**F-Fig.9**) to secure the rear part of the side member onto the side member.

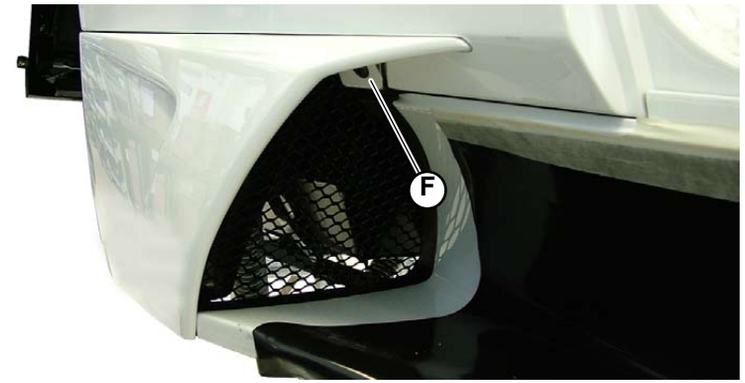

Fig.9

8. Tighten the screw (**G-Fig.10**) on the lower part.

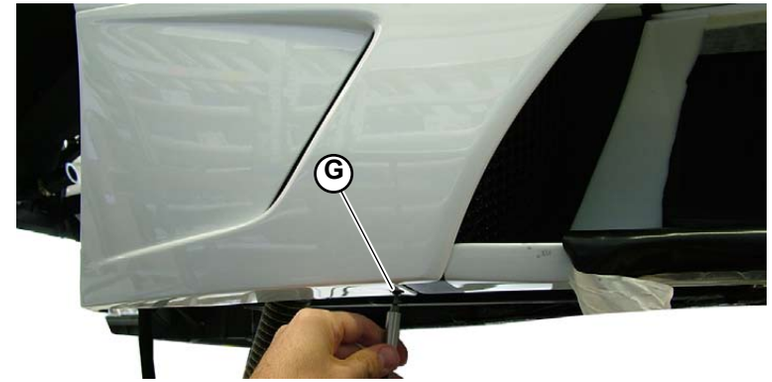

Fig.10

- Assemble the front element of the rear wheel arch **(082105)**.
- Assemble the rear element of the front wheel arch **(082105)**.
- Assemble the 2 wheels on the left flank (front and rear wheels) **(060105)**.

® Automobili Lamborghini S.p.A.
The information and procedures published below are strictly confidential and exclusively for the Lamborghini Dealer Network and Authorized Service Points. All copyrights are property of Automobili Lamborghini S.p.A based on copyright law. All of the PDF chapters in the WEB workshop manuals described below are based on information available at the time of publication. The company reserves the right to make updates and modifications. The following are prohibited: reprinting, reproduction, forwarding to unauthorized people and/or third parties, and translation, including partial, without written authorization from Automobili Lamborghini S.p.A.

This section explains how to disassemble:

A) Tunnel end panels
B) Tunnel ornament
C) Right side panel
D) Left side panel
E) Seatbelt retractor cover
F) Central armrest
G) Tunnel cover

® Automobili Lamborghini S.p.A.
The information and procedures published below are strictly confidential and exclusively for the Lamborghini Dealer Network and Authorized Service Points. All copyrights are property of Automobili Lamborghini S.p.A based on copyright law. All of the PDF chapters in the WEB workshop manuals described below are based on information available at the time of publication. The company reserves the right to make updates and modifications. The following are prohibited: reprinting, reproduction, forwarding to unauthorized people and/or third parties, and translation, including partial, without written authorization from Automobili Lamborghini S.p.A.

A) Disassembling the tunnel end panels

1. Carefully lift up the edge of the panel (**A-Fig.1**) until the 2 finned anchors on the panel detach from their housings on the tunnel.
2. Remove the panel.

Always take the utmost care not to damage the leather upholstery during disassembly procedures.

There are 2 tunnel end panels assembled inside the car (one on the right and one on the left). The disassembly procedure is the same for both.

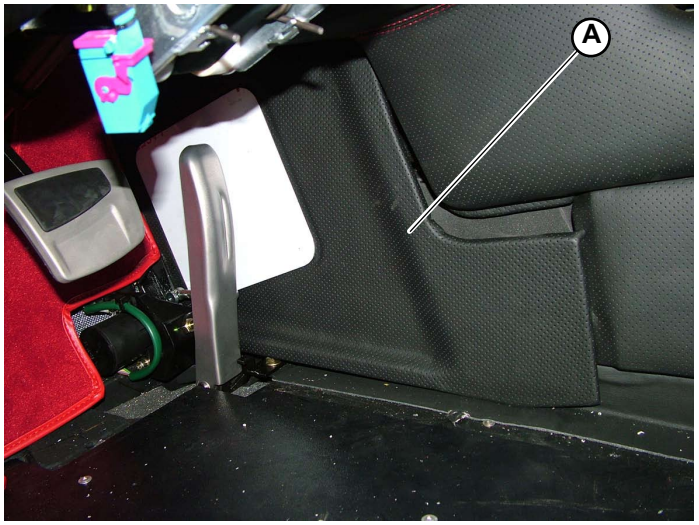

Fig.1

® Automobili Lamborghini S.p.A.
The information and procedures published below are strictly confidential and exclusively for the Lamborghini Dealer Network and Authorized Service Points. All copyrights are property of Automobili Lamborghini S.p.A based on copyright law. All of the PDF chapters in the WEB workshop manuals described below are based on information available at the time of publication. The company reserves the right to make updates and modifications. The following are prohibited: reprinting, reproduction, forwarding to unauthorized people and/or third parties, and translation, including partial, without written authorization from Automobili Lamborghini S.p.A.

B) Disassembling the tunnel ornament

Preliminary operations

- Remove the car hi-fi system **(097503)**.
- Remove the air conditioner grille **(081603)**.

Ornament disassembly

1. Using a very small screwdriver, lift up the ornament (**A-Fig.2**) so that the 2 springs (**B-Fig.3**) holding it in place detach from the blocks.
2. Disconnect the various connections (**C-Fig.4**) connected to the tunnel ornament.

If the car features a manual gearbox, unscrew the gearlever knob to remove the tunnel ornament.

Always take the utmost care not to damage the leather upholstery during disassembly procedures.

Fig.2

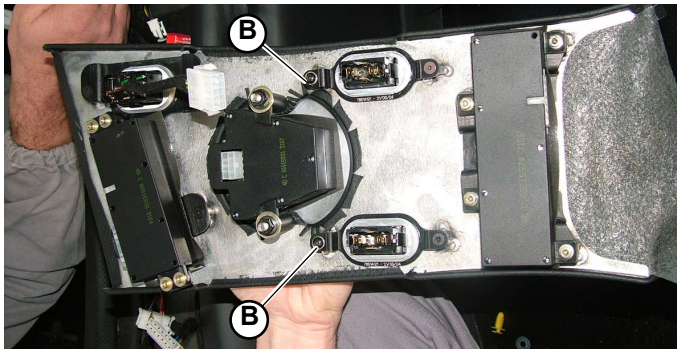

Fig.3

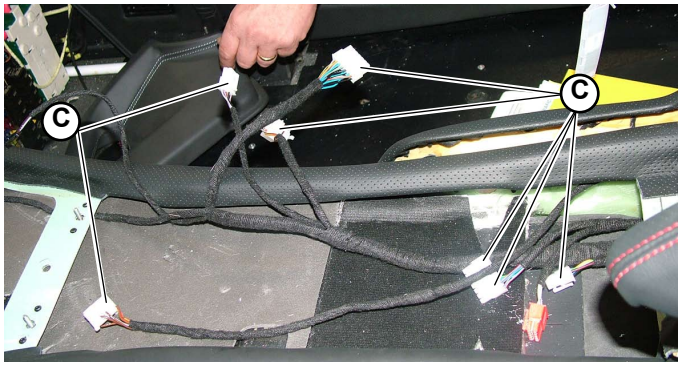

Fig.4

® Automobili Lamborghini S.p.A.
The information and procedures published below are strictly confidential and exclusively for the Lamborghini Dealer Network and Authorized Service Points. All copyrights are property of Automobili Lamborghini S.p.A based on copyright law. All of the PDF chapters in the WEB workshop manuals described below are based on information available at the time of publication. The company reserves the right to make updates and modifications. The following are prohibited: reprinting, reproduction, forwarding to unauthorized people and/or third parties, and translation, including partial, without written authorization from Automobili Lamborghini S.p.A.

C) Disassembling the right side panel

Preliminary operations

- Remove the car hi-fi system **(097503)**.
- Remove the air conditioner grille **(081603)**.
- Remove the central ornament **(Point B)**.

Panel disassembly

1. Unscrew the 3 stud bolts (**B-Fig.6**) securing the right side panel to the central tunnel; then remove the right side panel (**A-Fig.5**).

If both side panels need to be disassembled (left and right), it is advisable to first disassemble the right panel (Point C) and then the left panel (Point D).

Always take the utmost care not to damage the leather upholstery during disassembly procedures.

Fig.5

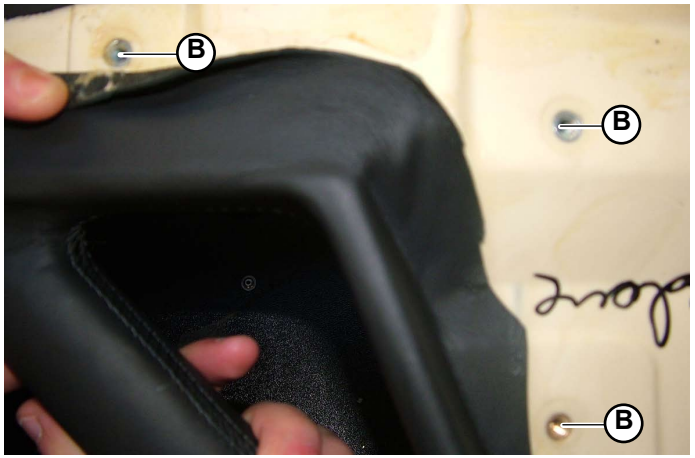

Fig.6

® Automobili Lamborghini S.p.A.
The information and procedures published below are strictly confidential and exclusively for the Lamborghini Dealer Network and Authorized Service Points. All copyrights are property of Automobili Lamborghini S.p.A based on copyright law. All of the PDF chapters in the WEB workshop manuals described below are based on information available at the time of publication. The company reserves the right to make updates and modifications. The following are prohibited: reprinting, reproduction, forwarding to unauthorized people and/or third parties, and translation, including partial, without written authorization from Automobili Lamborghini S.p.A.

D) Disassembling the left side panel

Preliminary operations

- Remove the car hi-fi system **(097503)**.
- Remove the air conditioner grille **(081603)**.
- Remove the central ornament **(Point B)**.

Panel disassembly

1. Unscrew the 3 stud bolts (**B-Fig.8**) and the finned anchor (**C-Fig.8**) securing the left side panel to the central tunnel; then remove the left side panel (**A-Fig.7**).
2. Disconnect the temperature sensor connection (**D-Fig.8**).

If both side panels need to be disassembled (left and right), it is advisable to first disassemble the right panel (Point C) and then the left panel (Point D).

Always take the utmost care not to damage the leather upholstery during disassembly procedures.

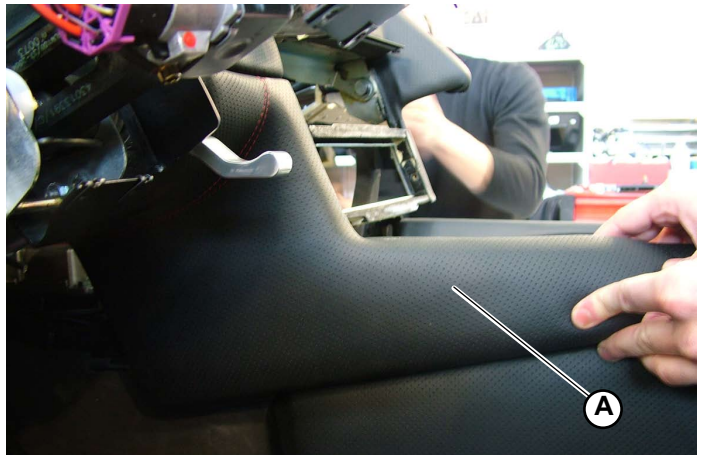

Fig.7

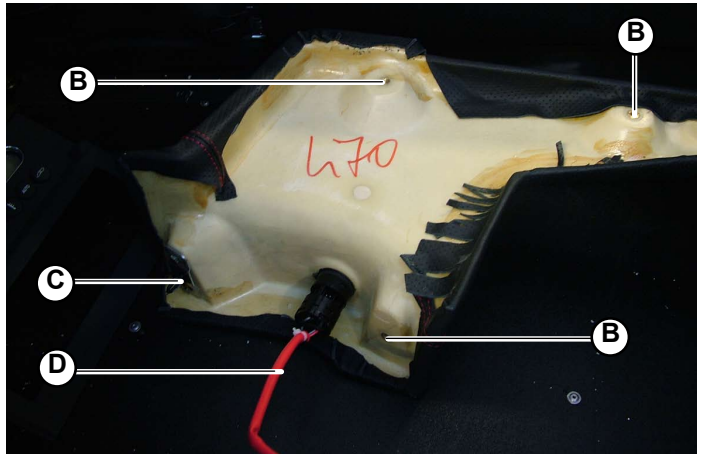

Fig.8

® Automobili Lamborghini S.p.A.
The information and procedures published below are strictly confidential and exclusively for the Lamborghini Dealer Network and Authorized Service Points. All copyrights are property of Automobili Lamborghini S.p.A based on copyright law. All of the PDF chapters in the WEB workshop manuals described below are based on information available at the time of publication. The company reserves the right to make updates and modifications. The following are prohibited: reprinting, reproduction, forwarding to unauthorized people and/or third parties, and translation, including partial, without written authorization from Automobili Lamborghini S.p.A.

E) Disassembling the seatbelt retractor cover

1. Unscrew the 2 screws (**B-Fig.9**) to remove the belts (**A-Fig.9**) from the guides.
2. Unscrew the 2 screws (**C-Fig.10**) securing the rear of seatbelt retractor cover (**D-Fig.9**).
3. Remove the seatbelt retractor cover.

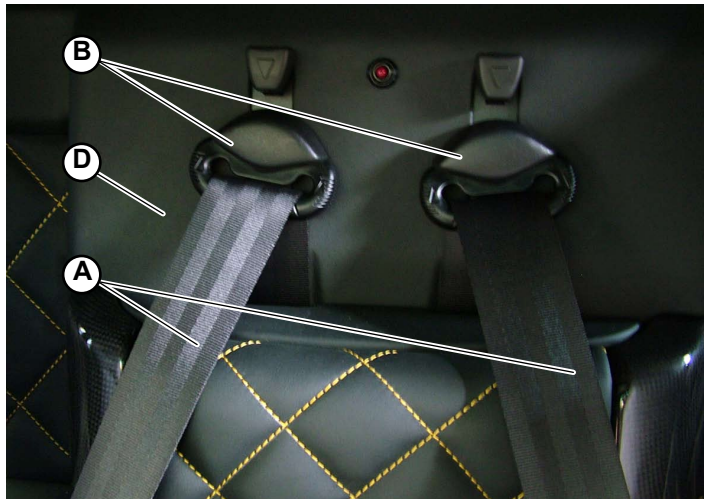

Fig.9

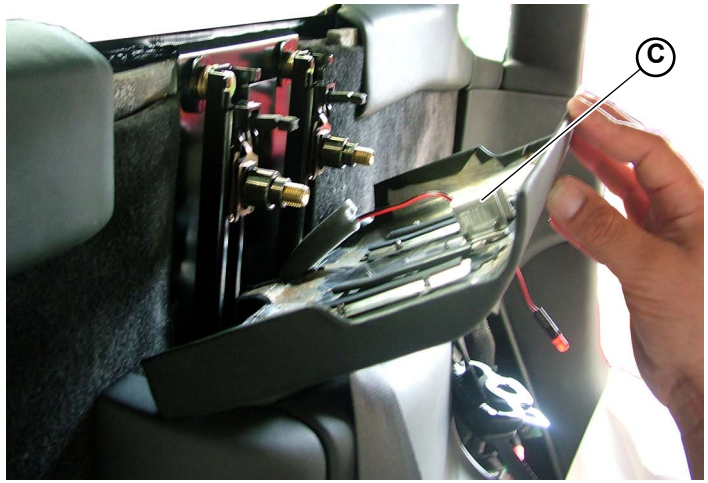

Fig.10

® Automobili Lamborghini S.p.A.
The information and procedures published below are strictly confidential and exclusively for the Lamborghini Dealer Network and Authorized Service Points. All copyrights are property of Automobili Lamborghini S.p.A based on copyright law. All of the PDF chapters in the WEB workshop manuals described below are based on information available at the time of publication. The company reserves the right to make updates and modifications. The following are prohibited: reprinting, reproduction, forwarding to unauthorized people and/or third parties, and translation, including partial, without written authorization from Automobili Lamborghini S.p.A.

F) Disassembling the central armrest

Preliminary operations

- Disassemble the seatbelt retractor cover **(Point E)**.

Central armrest disassembly

1. Lift the lid of the document holder (**A-Fig.11**).
2. Unscrew the 4 screws securing the bottom of the holder.
3. Remove the document holder.
4. Unscrew the 2 screws (**B-Fig.12**) securing the central armrest to the tunnel.
5. Lift the central armrest to release the 2 slots on the upper part of the tunnel.

Fig.11

STOP **Always take the utmost care not to damage the leather upholstery during disassembly procedures.**

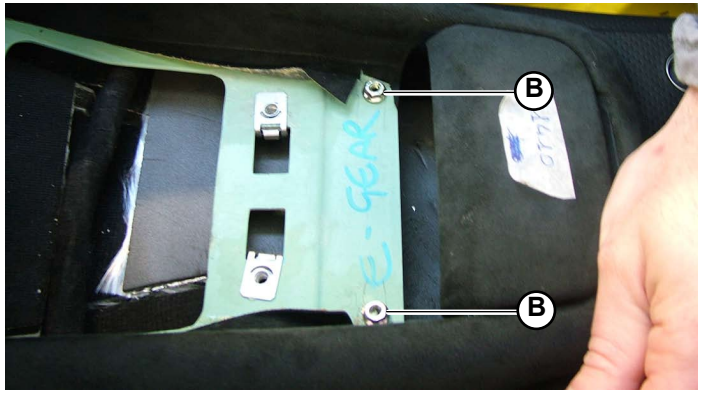

Fig.12

® Automobili Lamborghini S.p.A.
The information and procedures published below are strictly confidential and exclusively for the Lamborghini Dealer Network and Authorized Service Points. All copyrights are property of Automobili Lamborghini S.p.A based on copyright law. All of the PDF chapters in the WEB workshop manuals described below are based on information available at the time of publication. The company reserves the right to make updates and modifications. The following are prohibited: reprinting, reproduction, forwarding to unauthorized people and/or third parties, and translation, including partial, without written authorization from Automobili Lamborghini S.p.A.

G) Disassembling the tunnel cover

Preliminary operations

- Disassemble the seatbelt retractor cover **(Point E)**.
- Disassemble the central armrest **(Point F)**.
- Remove the car hi-fi system **(097503)**.
- Remove the air conditioner grille **(081603)**.
- Remove the tunnel ornament **(Point B)**.
- Disassemble the right side panel **(Point C)**.
- Disassemble the left side panel **(Point D)**.

Tunnel cover disassembly

1. Unscrew the 6 screws (3 for each side) (**B-Fig.15**) securing the tunnel cover to the car; extract the tunnel cover (**A-Fig.15**) from the tunnel.

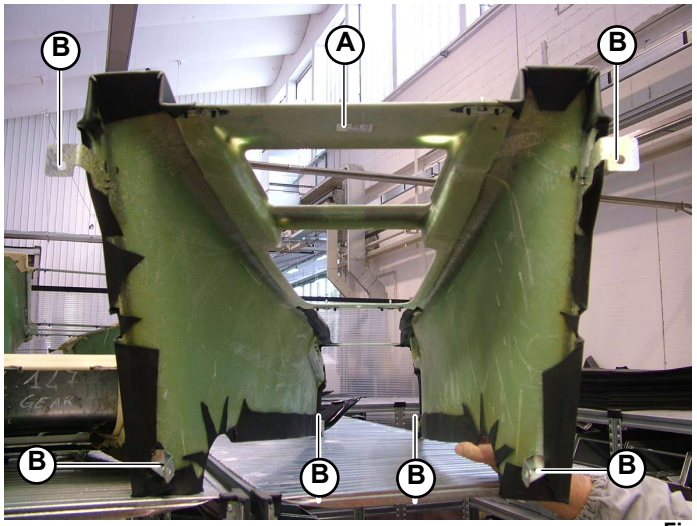

Fig.13

Always take the utmost care not to damage the leather upholstery during disassembly procedures.

® Automobili Lamborghini S.p.A.
The information and procedures published below are strictly confidential and exclusively for the Lamborghini Dealer Network and Authorized Service Points. All copyrights are property of Automobili Lamborghini S.p.A based on copyright law. All of the PDF chapters in the WEB workshop manuals described below are based on information available at the time of publication. The company reserves the right to make updates and modifications. The following are prohibited: reprinting, reproduction, forwarding to unauthorized people and/or third parties, and translation, including partial, without written authorization from Automobili Lamborghini S.p.A.

This section explains how to assemble:

A) Tunnel end panels
B) Tunnel ornament
C) Right side panel
D) Left side panel
E) Seatbelt retractor cover
F) Central armrest
G) Tunnel cover

® Automobili Lamborghini S.p.A.
The information and procedures published below are strictly confidential and exclusively for the Lamborghini Dealer Network and Authorized Service Points. All copyrights are property of Automobili Lamborghini S.p.A based on copyright law. All of the PDF chapters in the WEB workshop manuals described below are based on information available at the time of publication. The company reserves the right to make updates and modifications. The following are prohibited: reprinting, reproduction, forwarding to unauthorized people and/or third parties, and translation, including partial, without written authorization from Automobili Lamborghini S.p.A.

A) Assembling the tunnel end panels

1. Insert the slot on the panel (**A-Fig.1**) into its housing on the end part of the tunnel.
2. Press the panel against the tunnel until the two finned anchors enter their housings.

Always take the utmost care not to damage the leather upholstery during assembly procedures.

There are 2 tunnel end panels assembled inside the car (one on the right and one on the left). The assembly procedure is the same for both.

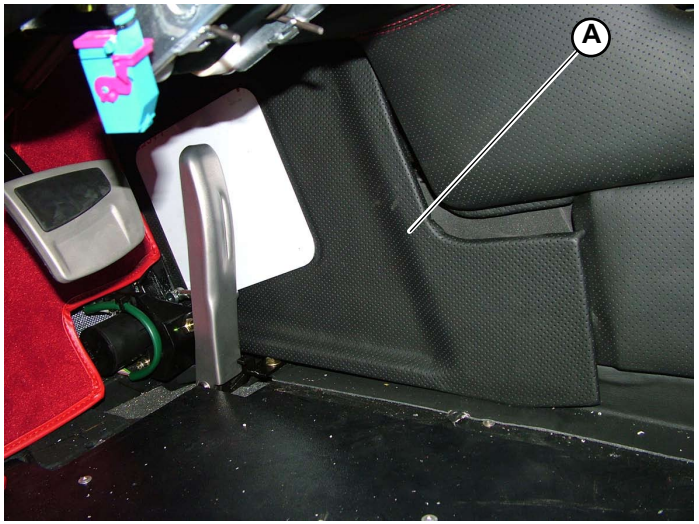

Fig.1

® Automobili Lamborghini S.p.A.
The information and procedures published below are strictly confidential and exclusively for the Lamborghini Dealer Network and Authorized Service Points. All copyrights are property of Automobili Lamborghini S.p.A based on copyright law. All of the PDF chapters in the WEB workshop manuals described below are based on information available at the time of publication. The company reserves the right to make updates and modifications. The following are prohibited: reprinting, reproduction, forwarding to unauthorized people and/or third parties, and translation, including partial, without written authorization from Automobili Lamborghini S.p.A.

B) Assembling the tunnel ornament

1. Connect the various connectors (**A-Fig.2**) to the respective ports on the bottom of the ornament.

STOP **All the connectors feature a "compulsory" connection to a single port, except for 2 which are identical.**
To avoid confusion:
- **connect the red connector to the TCS**
- **connect the white connector to the mirrors**

2. Allow the ornament (**B-Fig.3**) to slightly slide towards the rear of the tunnel until it snaps under the central armrest (**C-Fig.3**).
3. Secure the ornament to the tunnel by compressing and anchoring the 2 springs (**D-Fig.4**) (first on the right side and then on the left).

STOP **Always take the utmost care not to damage the leather upholstery during assembly procedures.**

- Assemble the air conditioner grille **(081605)**.
- Assemble the car hi-fi system **(097505)**.

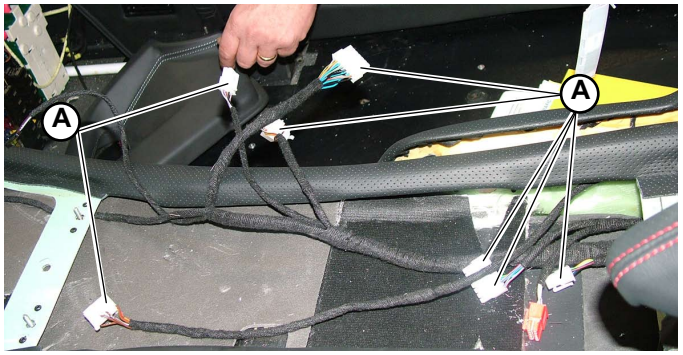

Fig.2

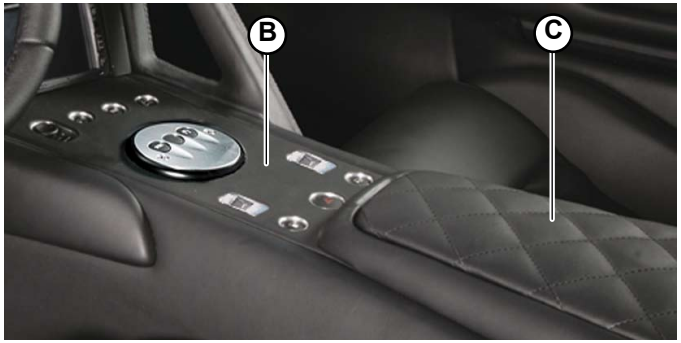

Fig.3

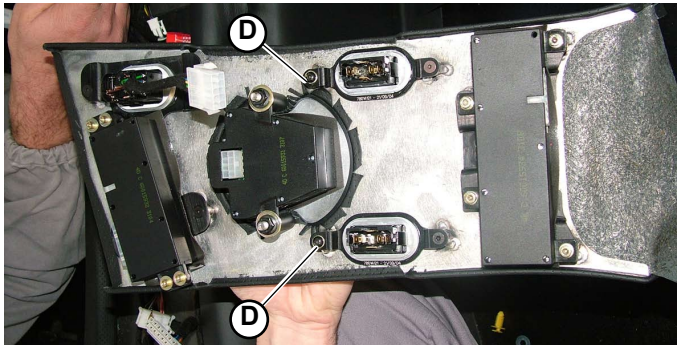

Fig.4

® Automobili Lamborghini S.p.A.
The information and procedures published below are strictly confidential and exclusively for the Lamborghini Dealer Network and Authorized Service Points. All copyrights are property of Automobili Lamborghini S.p.A based on copyright law. All of the PDF chapters in the WEB workshop manuals described below are based on information available at the time of publication. The company reserves the right to make updates and modifications. The following are prohibited: reprinting, reproduction, forwarding to unauthorized people and/or third parties, and translation, including partial, without written authorization from Automobili Lamborghini S.p.A.

C) Assembling the right side panel

1. Secure the right side panel (**A-Fig.5**) to the tunnel using the 3 stud bolts (**B-Fig.6**).

- Assemble the central ornament **(Point B)**.
- Assemble the air conditioner grille **(081605)**.
- Assemble the car hi-fi system **(097505)**.

If both side panels need to be assembled (left and right), it is advisable to first assemble the left panel (Point D) and then the right panel (Point C).

Always take the utmost care not to damage the leather upholstery during assembly procedures.

Fig.5

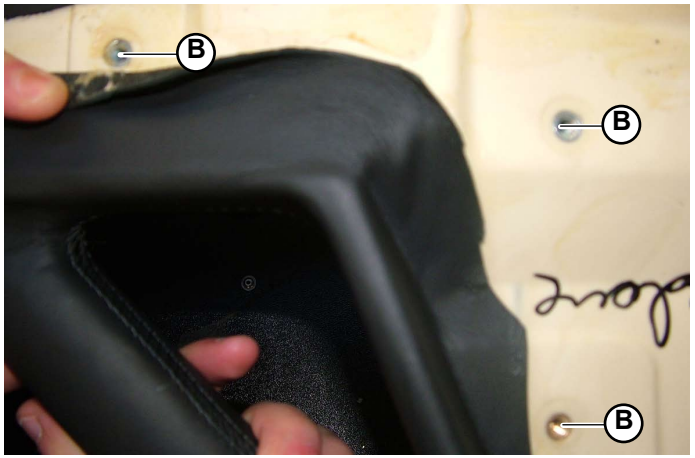

Fig.6

® Automobili Lamborghini S.p.A.
The information and procedures published below are strictly confidential and exclusively for the Lamborghini Dealer Network and Authorized Service Points. All copyrights are property of Automobili Lamborghini S.p.A based on copyright law. All of the PDF chapters in the WEB workshop manuals described below are based on information available at the time of publication. The company reserves the right to make updates and modifications. The following are prohibited: reprinting, reproduction, forwarding to unauthorized people and/or third parties, and translation, including partial, without written authorization from Automobili Lamborghini S.p.A.

D) Assembling the left side panel

1. Connect the temperature sensor connection (**A-Fig.7**).
2. To secure the left side panel (**B-Fig.8**) to the tunnel: tighten the 3 stud bolts (**C-Fig.7**) and insert the finned anchor (**D-Fig.7**) in the central tunnel.

- Assemble the central ornament **(Point B)**.
- Assemble the air conditioner grille **(081605)**.
- Assemble the car hi-fi system **(097505)**.

If both side panels need to be assembled (left and right), it is advisable to first assemble the left panel (Point D) and then the right panel (Point C).

STOP **Always take the utmost care not to damage the leather upholstery during assembly procedures.**

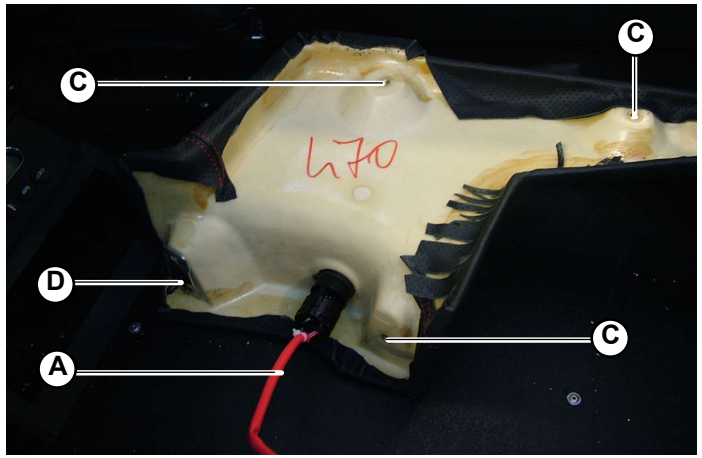

Fig.7

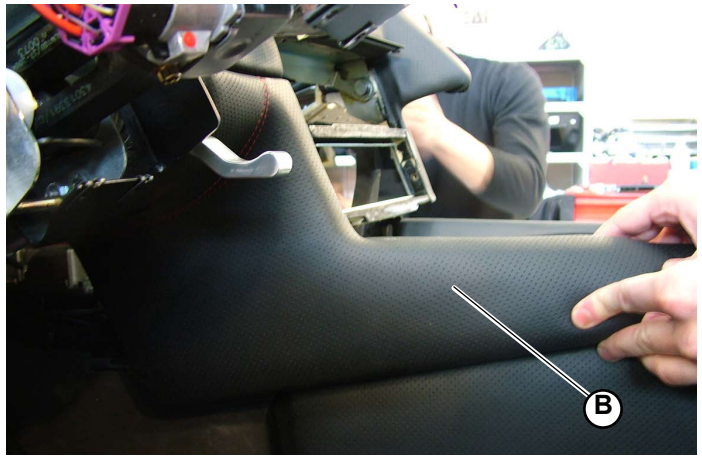

Fig.8

® Automobili Lamborghini S.p.A.
The information and procedures published below are strictly confidential and exclusively for the Lamborghini Dealer Network and Authorized Service Points. All copyrights are property of Automobili Lamborghini S.p.A based on copyright law. All of the PDF chapters in the WEB workshop manuals described below are based on information available at the time of publication. The company reserves the right to make updates and modifications. The following are prohibited: reprinting, reproduction, forwarding to unauthorized people and/or third parties, and translation, including partial, without written authorization from Automobili Lamborghini S.p.A.

E) Assembling the seatbelt retractor cover

1. Pass the LED (**A-Fig.9**) through the hole on the seatbelt retractor cover (**B-Fig.9**).
2. Insert the 2 slots (**C-Fig.10**) on the lower part of the seatbelt retractor cover in their housings (**D-Fig.10**) on the upper part of the central armrest.
3. Secure the seatbelt retractor cover using the 2 fixing screws (**E-Fig.10**) on the rear.
4. Secure the belt stops to the guides using the 2 screws (**F-Fig.9**).

STOP **Always take the utmost care not to damage the leather upholstery during assembly procedures.**

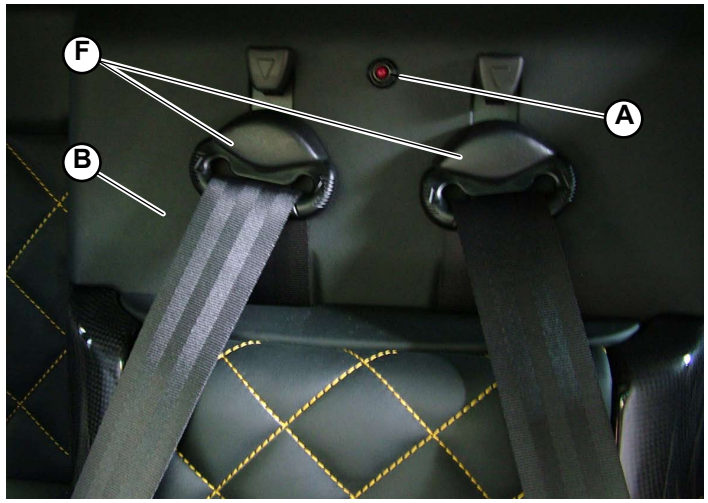

Fig.9

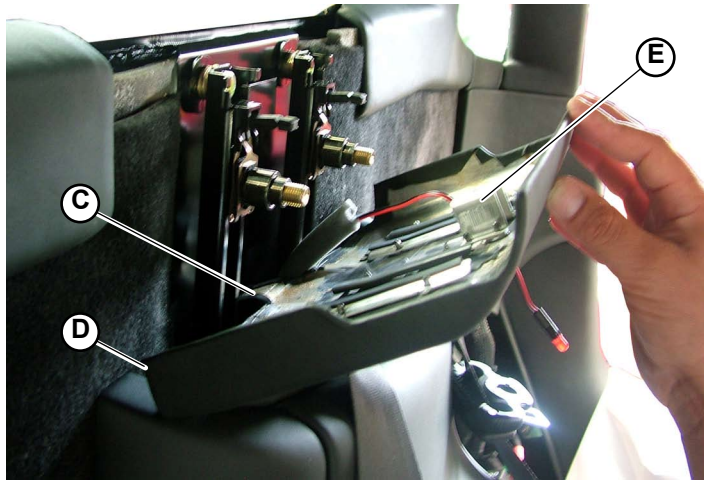

Fig.10

® Automobili Lamborghini S.p.A.
The information and procedures published below are strictly confidential and exclusively for the Lamborghini Dealer Network and Authorized Service Points. All copyrights are property of Automobili Lamborghini S.p.A based on copyright law. All of the PDF chapters in the WEB workshop manuals described below are based on information available at the time of publication. The company reserves the right to make updates and modifications. The following are prohibited: reprinting, reproduction, forwarding to unauthorized people and/or third parties, and translation, including partial, without written authorization from Automobili Lamborghini S.p.A.

F) Assembling the central armrest

1. Position the central armrest so the 2 slots on the upper part of the armrest snap into their housings.
2. Secure the central armrest to the tunnel using the 2 screws (**A-Fig.11**).
3. Insert the document holder compartment.
4. Secure the document holder compartment to the armrest using the 4 screws (**B-Fig.12**).

- Assemble the seatbelt retractor cover **(Point E)**.

Always take the utmost care not to damage the leather upholstery during assembly procedures.

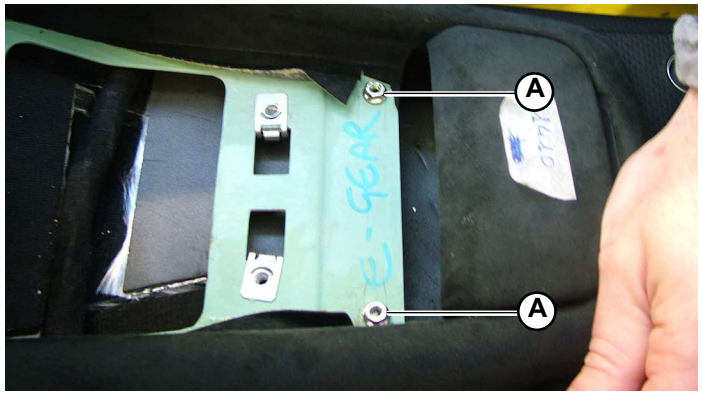

Fig.11

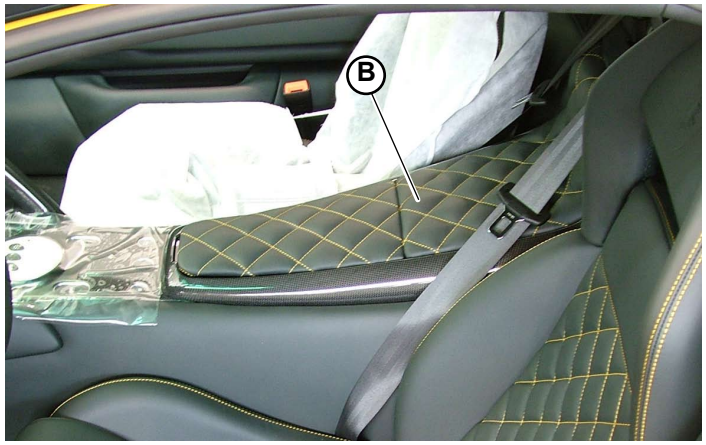

Fig.12

® Automobili Lamborghini S.p.A.
The information and procedures published below are strictly confidential and exclusively for the Lamborghini Dealer Network and Authorized Service Points. All copyrights are property of Automobili Lamborghini S.p.A based on copyright law. All of the PDF chapters in the WEB workshop manuals described below are based on information available at the time of publication. The company reserves the right to make updates and modifications. The following are prohibited: reprinting, reproduction, forwarding to unauthorized people and/or third parties, and translation, including partial, without written authorization from Automobili Lamborghini S.p.A.

G) Assembling the tunnel cover

1. Secure the tunnel cover (**A-Fig.15**) to the tunnel using the 6 screws (3 for each side) (**B-Fig.15**).

- Assemble the left side panel **(Point D)**.
- Assemble the right side panel **(Point C)**.
- Assemble the tunnel ornament **(Point B)**.
- Assemble the air conditioner grille **(081605)**.
- Assemble the car hi-fi system **(097505)**.
- Assemble the central armrest **(Point F)**.
- Assemble the seatbelt retractor cover **(Point E)**.

STOP **Always take the utmost care not to damage the leather upholstery during assembly procedures.**

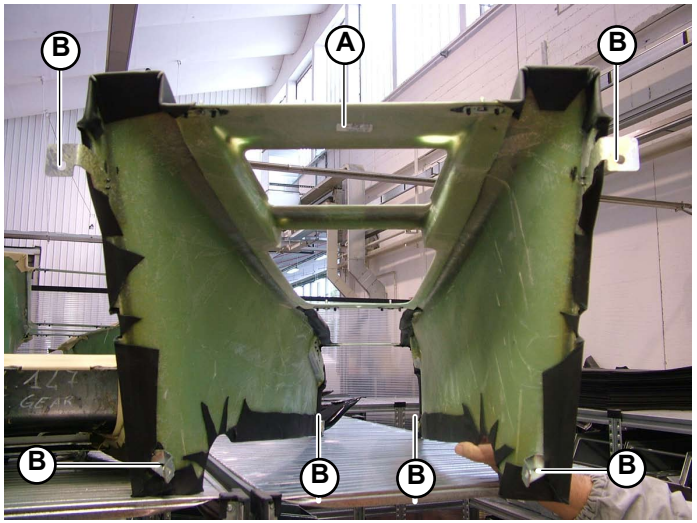

Fig.13

® Automobili Lamborghini S.p.A.
The information and procedures published below are strictly confidential and exclusively for the Lamborghini Dealer Network and Authorized Service Points. All copyrights are property of Automobili Lamborghini S.p.A based on copyright law. All of the PDF chapters in the WEB workshop manuals described below are based on information available at the time of publication. The company reserves the right to make updates and modifications. The following are prohibited: reprinting, reproduction, forwarding to unauthorized people and/or third parties, and translation, including partial, without written authorization from Automobili Lamborghini S.p.A.

Inner trim check

STOP Check regularly the integrity and tightening torque (000800) of the upholstery and safety systems inside the vehicle.

CAUTION!

Take particular care when checking that the seatbelts function correctly:
- slowly unroll the belts to ensure they unroll smoothly.
- vigorously pull the belts to ensure they lock immediately.

In the case of any malfunctions, carry out the necessary procedures (088000-088003).

® Automobili Lamborghini S.p.A.
The information and procedures published below are strictly confidential and exclusively for the Lamborghini Dealer Network and Authorized Service Points. All copyrights are property of Automobili Lamborghini S.p.A based on copyright law. All of the PDF chapters in the WEB workshop manuals described below are based on information available at the time of publication. The company reserves the right to make updates and modifications. The following are prohibited: reprinting, reproduction, forwarding to unauthorized people and/or third parties, and translation, including partial, without written authorization from Automobili Lamborghini S.p.A.

This section explains how to disassemble:

A. Right side cover
B) Left side cover
C) Right lower dashboard assembly
D) Left lower dashboard assembly
E) Dashboard cover
F) Dashboard
G) Door panel
H) Triangle
I) Door cover
L) Handbrake boot and cover
M) Sun visor
N) Front cross members
O) Rear cross member
P) Rear covers
Q) Shell
R) Side member cover
S) Pillar B
T) Pillar C
U) Pillar A
V) Ceiling upholstery
Z) Seat rear cover
W) Seat rear cover panels
Y) Rear rug

® Automobili Lamborghini S.p.A.
The information and procedures published below are strictly confidential and exclusively for the Lamborghini Dealer Network and Authorized Service Points. All copyrights are property of Automobili Lamborghini S.p.A based on copyright law. All of the PDF chapters in the WEB workshop manuals described below are based on information available at the time of publication. The company reserves the right to make updates and modifications. The following are prohibited: reprinting, reproduction, forwarding to unauthorized people and/or third parties, and translation, including partial, without written authorization from Automobili Lamborghini S.p.A.

A) Disassembling the right side cover

Preliminary operations

- Remove the right side air vent **(081903)**.

Cover disassembly

1. Access the hole in the right side air vent (**C- Fig.1**) to unscrew the 2 stud bolts (**B-Fig.2**) securing the right side cover; unscrew the right side cover (**A-Fig.1**).
2. Disconnect the airbag connector (**D-Fig.2**) from the airbag key selector (**E-Fig.2**) on the cover.

Always take the utmost care not to damage the leather upholstery during disassembly procedures.

Fig.1

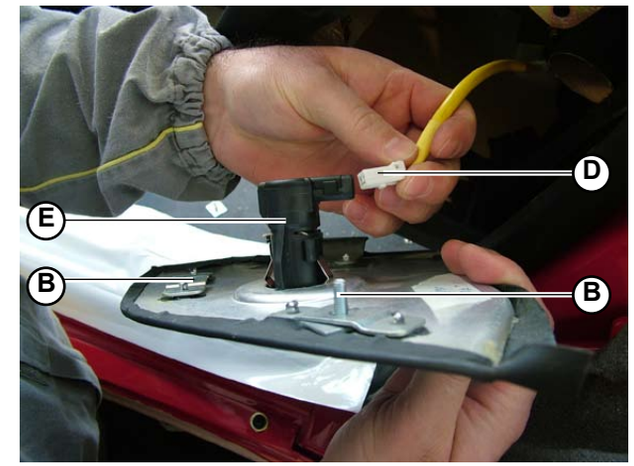

Fig.2

® Automobili Lamborghini S.p.A.
The information and procedures published below are strictly confidential and exclusively for the Lamborghini Dealer Network and Authorized Service Points. All copyrights are property of Automobili Lamborghini S.p.A based on copyright law. All of the PDF chapters in the WEB workshop manuals described below are based on information available at the time of publication. The company reserves the right to make updates and modifications. The following are prohibited: reprinting, reproduction, forwarding to unauthorized people and/or third parties, and translation, including partial, without written authorization from Automobili Lamborghini S.p.A.

B) Disassembling the left side cover

1. Lift up the edge of the left side cover (**A-Fig.3**) and apply pressure to the cover until the plastic block (**B-Fig.3**) is released from its coupling (**C-Fig.3**).
2. Raise the left side cover.

STOP Always take the utmost care not to damage the leather upholstery during disassembly procedures.

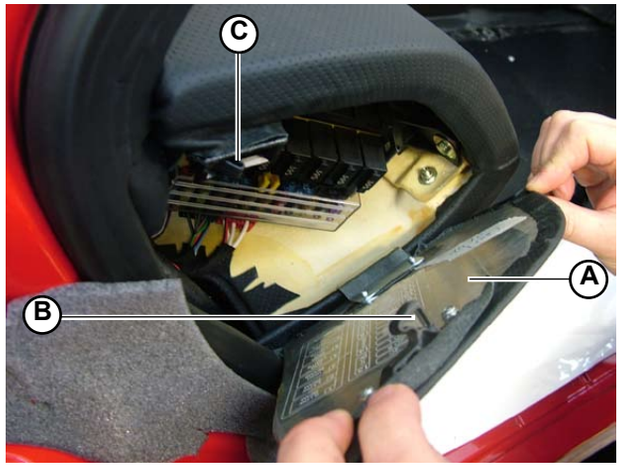

Fig.3

® Automobili Lamborghini S.p.A.
The information and procedures published below are strictly confidential and exclusively for the Lamborghini Dealer Network and Authorized Service Points. All copyrights are property of Automobili Lamborghini S.p.A based on copyright law. All of the PDF chapters in the WEB workshop manuals described below are based on information available at the time of publication. The company reserves the right to make updates and modifications. The following are prohibited: reprinting, reproduction, forwarding to unauthorized people and/or third parties, and translation, including partial, without written authorization from Automobili Lamborghini S.p.A.

C) Disassembling the right lower dashboard assembly

Preliminary operations

- Disassemble the right side cover **(Point A)**.
- Remove the right central air vent **(081903)**.

Lower dashboard assembly disassembly

1. Unscrew the 2 stud bolts (**A-Fig.4**) securing the lower dashboard assembly (**B-Fig.5**) to the dashboard.

To disassemble, access the right stud bolt from the free space left by removed right side cover and access the left stud bolt through the free space left by the disassembled air vent.

2. Extract the right lower dashboard assembly so that the 2 finned anchors (**C-Fig.5**) on the lower part are released from the respective fixing brackets.

Always take the utmost care not to damage the leather upholstery during disassembly procedures.

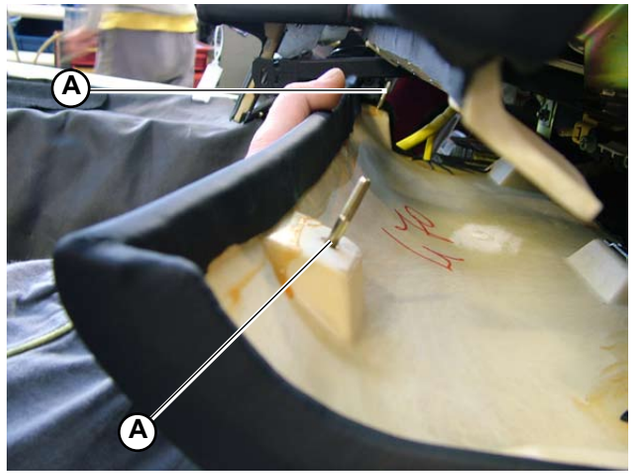

Fig.4

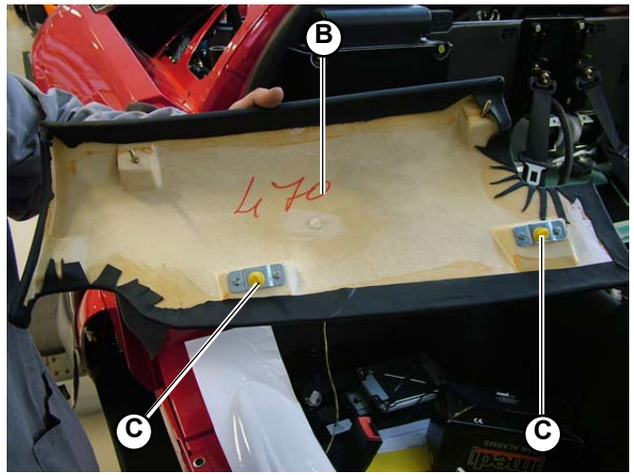

Fig.5

® Automobili Lamborghini S.p.A.
The information and procedures published below are strictly confidential and exclusively for the Lamborghini Dealer Network and Authorized Service Points. All copyrights are property of Automobili Lamborghini S.p.A based on copyright law. All of the PDF chapters in the WEB workshop manuals described below are based on information available at the time of publication. The company reserves the right to make updates and modifications. The following are prohibited: reprinting, reproduction, forwarding to unauthorized people and/or third parties, and translation, including partial, without written authorization from Automobili Lamborghini S.p.A.

D) Disassembling the left lower dashboard assembly

Preliminary operations

- Disassemble the left side cover **(Point B)**.
- Disassemble the steering wheel cover **(087503)**.

Lower dashboard assembly disassembly

1. Disassemble the engine hood opening lever (**A-Fig.6**) by unscrewing the relative screw (**B-Fig.6**).
2. Unscrew the 3 stud bolts (**C-Fig.7**) securing the lower dashboard assembly (**D-Fig.7**).

To disassemble, access the 2 right stud bolts through the free space left by the removed steering wheel cover and access the left stud bolt through the free space left by the removed left side cover.

Always take the utmost care not to damage the leather upholstery during disassembly procedures.

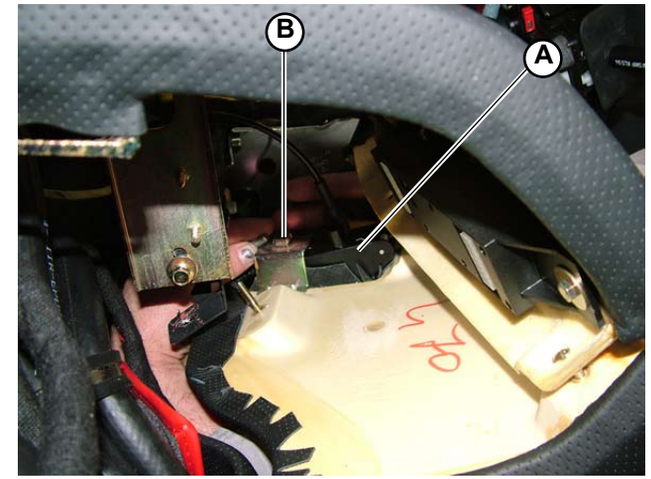

Fig.6

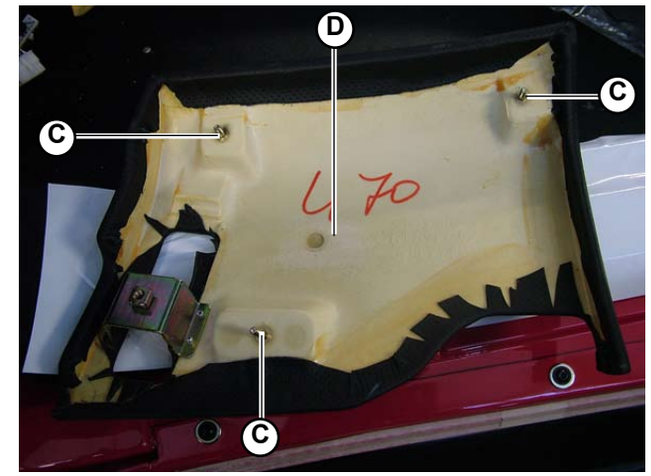

Fig.7

® Automobili Lamborghini S.p.A.
The information and procedures published below are strictly confidential and exclusively for the Lamborghini Dealer Network and Authorized Service Points. All copyrights are property of Automobili Lamborghini S.p.A based on copyright law. All of the PDF chapters in the WEB workshop manuals described below are based on information available at the time of publication. The company reserves the right to make updates and modifications. The following are prohibited: reprinting, reproduction, forwarding to unauthorized people and/or third parties, and translation, including partial, without written authorization from Automobili Lamborghini S.p.A.

E) Disassembling the dashboard cover

Preliminary operations

- Disassemble the left side cover **(Point B)**.
- Remove the left side air vent and the left central air vent **(081903)**.

Cover disassembly

1. Disassemble the bracket (**A-Fig.8**) connected to the control unit by unscrewing the 2 fixing screws.
2. Access the apertures left by the removed air vents and unscrew the 2 knobs (**B-Fig.9**) securing the 2 stud bolts (**C-Fig.9**) on the dashboard cover to the 2 flanges (**D-Fig.9**) on the dashboard.
3. Lift the dashboard cover releasing the 2 stud bolts from their respective flanges.
4. Disconnect the 2 connections (**E-Fig.10**) from the 2 connectors (**F-Fig.11**) on the rear of the dashboard cover.
5. Extract the dashboard cover.

Always take the utmost care not to damage the leather upholstery during disassembly procedures.

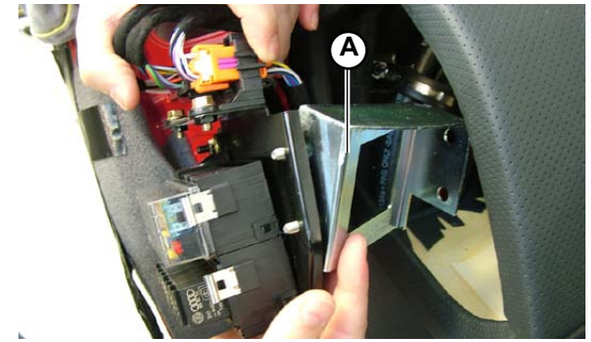

Fig.8

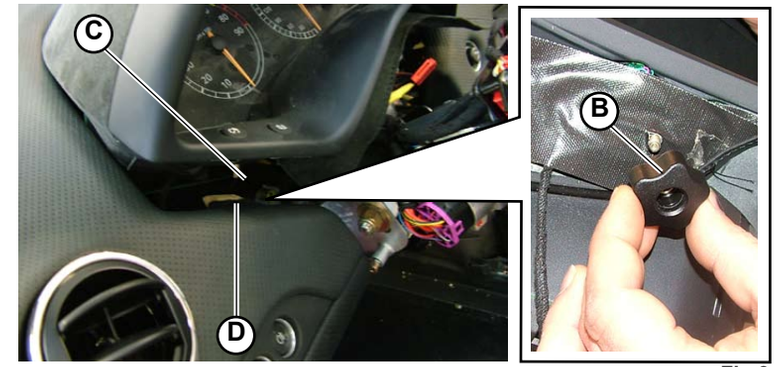

Fig.9

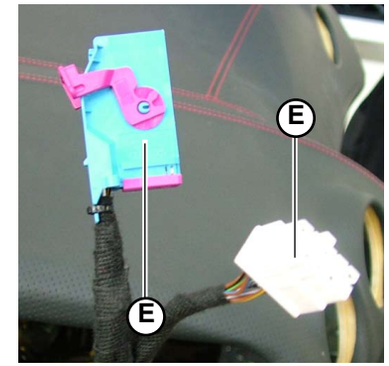

Fig.10

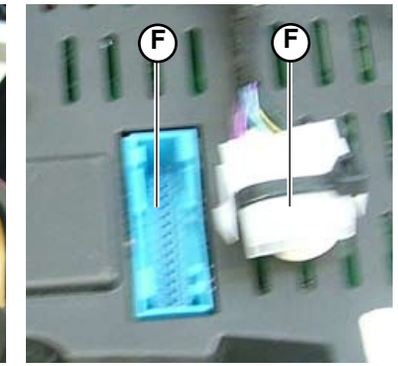

Fig.11

® Automobili Lamborghini S.p.A.
The information and procedures published below are strictly confidential and exclusively for the Lamborghini Dealer Network and Authorized Service Points. All copyrights are property of Automobili Lamborghini S.p.A based on copyright law. All of the PDF chapters in the WEB workshop manuals described below are based on information available at the time of publication. The company reserves the right to make updates and modifications. The following are prohibited: reprinting, reproduction, forwarding to unauthorized people and/or third parties, and translation, including partial, without written authorization from Automobili Lamborghini S.p.A.

F) Disassembling the dashboard

Preliminary operations

- Disassemble the right side cover **(Point A)**.
- Disassemble the left side cover **(Point B)**.
- Remove the 4 air vents **(081903)**.
- Remove the car hi-fi system **(097503)**.
- Remove the air conditioner grille **(081603)**.
- Disassemble the right side panel **(086303)**.
- Disassemble the left side panel **(086303)**.
- Disassemble the dashboard cover **(Point E)**.
- Disassemble the right lower dashboard assembly **(Point C)**.
- Disassemble the left lower dashboard assembly **(Point D)**.

Dashboard disassembly

1. Release the dashboard (**A-Fig.12**) from the 2 stud bolts (**B-Fig.13**) securing the front of the dashboard.
2. Unscrew the 6 screws securing the dashboard to the 2 brackets (**C-Fig.13/14**) (3 screws for each bracket).
3. Disconnect the cigarette lighter and the sensor connections (**D-Fig.12**) positioned on the upper part of the dashboard.
4. Remove the dashboard.

Always take the utmost care not to damage the leather upholstery during disassembly procedures.

Fig.12

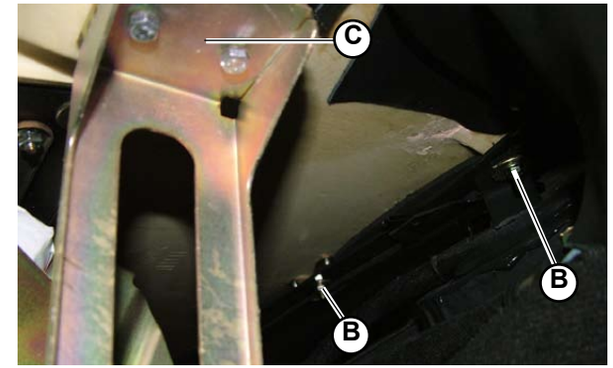

Fig.13

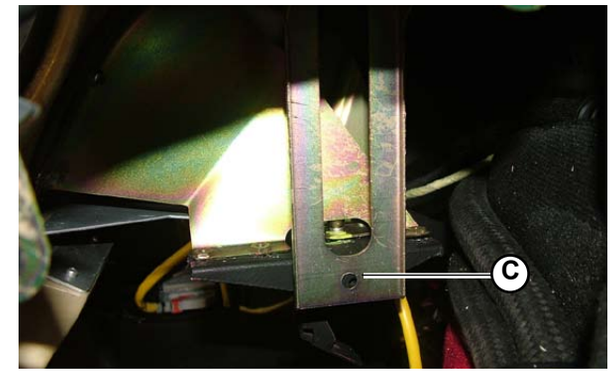

Fig.14

® Automobili Lamborghini S.p.A.
The information and procedures published below are strictly confidential and exclusively for the Lamborghini Dealer Network and Authorized Service Points. All copyrights are property of Automobili Lamborghini S.p.A based on copyright law. All of the PDF chapters in the WEB workshop manuals described below are based on information available at the time of publication. The company reserves the right to make updates and modifications. The following are prohibited: reprinting, reproduction, forwarding to unauthorized people and/or third parties, and translation, including partial, without written authorization from Automobili Lamborghini S.p.A.

G) Disassembling the door panel

1. Prize up the edge of the panel (**A-Fig.15**) to release the 4 finned anchors securing the panel from their couplings (**B-Fig.16**).

STOP Always take the utmost care not to damage the leather upholstery during disassembly procedures.

Fig.15

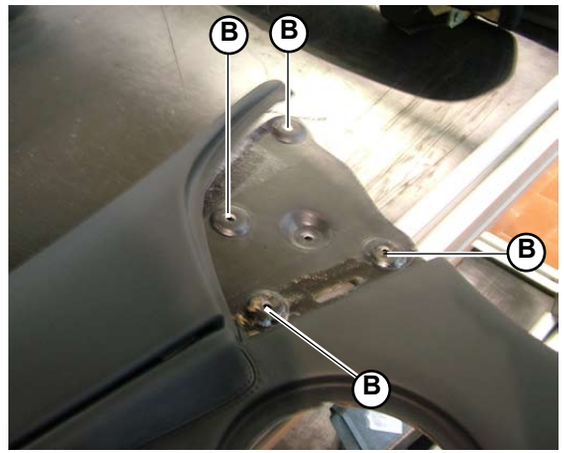

Fig.16

® Automobili Lamborghini S.p.A.
The information and procedures published below are strictly confidential and exclusively for the Lamborghini Dealer Network and Authorized Service Points. All copyrights are property of Automobili Lamborghini S.p.A based on copyright law. All of the PDF chapters in the WEB workshop manuals described below are based on information available at the time of publication. The company reserves the right to make updates and modifications. The following are prohibited: reprinting, reproduction, forwarding to unauthorized people and/or third parties, and translation, including partial, without written authorization from Automobili Lamborghini S.p.A.

H) Disassembling the door triangle

1. Prize up the edge of the triangle (**A-Fig.17**) to extract the 3 finned anchors securing the triangle from their couplings (**B-Fig.18**).

STOP Always take the utmost care not to damage the leather upholstery during disassembly procedures.

Fig.17

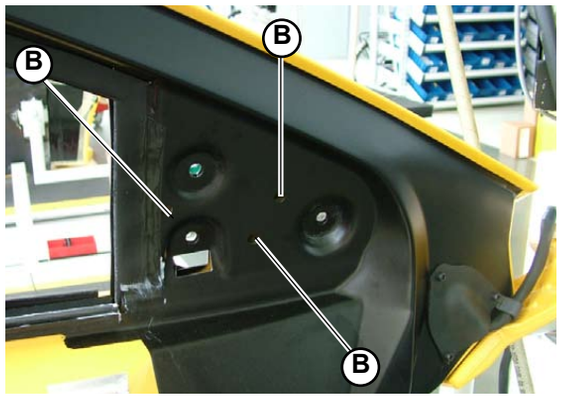

Fig.18

® Automobili Lamborghini S.p.A.
The information and procedures published below are strictly confidential and exclusively for the Lamborghini Dealer Network and Authorized Service Points. All copyrights are property of Automobili Lamborghini S.p.A based on copyright law. All of the PDF chapters in the WEB workshop manuals described below are based on information available at the time of publication. The company reserves the right to make updates and modifications. The following are prohibited: reprinting, reproduction, forwarding to unauthorized people and/or third parties, and translation, including partial, without written authorization from Automobili Lamborghini S.p.A.

I) Disassembling the door cover

Preliminary operations

- Disassemble the door panel **(Point G)**.
- Disassemble the door triangle **(Point H)**.
- Remove the car hi-fi system loudspeaker **(097503)**.

Disassembling the door cover

1. Lift the interior door handle and unscrew the screw underneath.
2. Using a screwdriver, detach the LED on the rear of the door and unscrew the screw (**A-Fig.19**) located in its housing.
3. Unscrew the screw to release the handle from the door cover (**B-Fig.20**).
4. Push the handle inwards to release it from the door.
5. Unscrew the mounting screw (**C-Fig.21**) on the upper part of the door.
6. Remove the door cover.

STOP **Always take the utmost care not to damage the leather upholstery during disassembly procedures.**

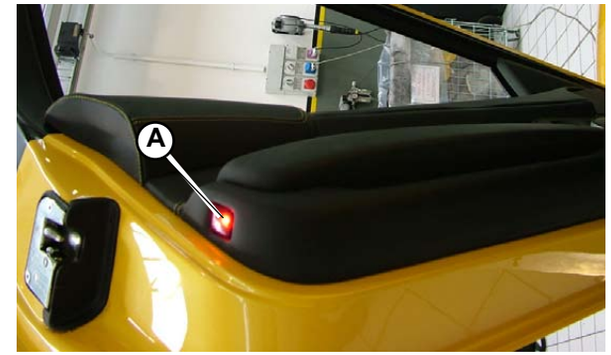

Fig.19

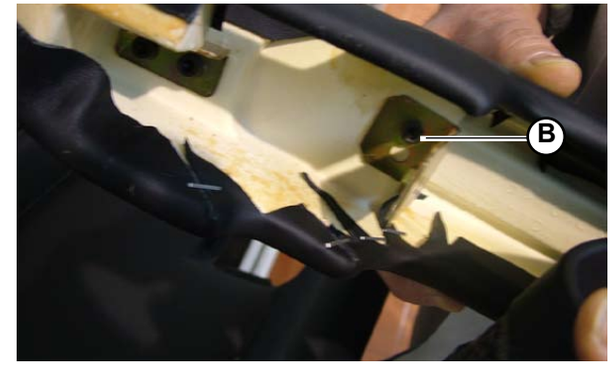

Fig.20

Fig.21

® Automobili Lamborghini S.p.A.
The information and procedures published below are strictly confidential and exclusively for the Lamborghini Dealer Network and Authorized Service Points. All copyrights are property of Automobili Lamborghini S.p.A based on copyright law. All of the PDF chapters in the WEB workshop manuals described below are based on information available at the time of publication. The company reserves the right to make updates and modifications. The following are prohibited: reprinting, reproduction, forwarding to unauthorized people and/or third parties, and translation, including partial, without written authorization from Automobili Lamborghini S.p.A.

L) Disassembling the handbrake boot and cover

1. Using a small screwdriver, prize up the plate (**A-Fig.22**) and remove the handbrake boot.
2. Disassemble the handbrake cover (**B-Fig.23**) by unscrewing the 3 screws (**C-Fig.23**) securing it to the car floor.

STOP Always take the utmost care not to damage the leather upholstery during disassembly procedures.

Fig.22

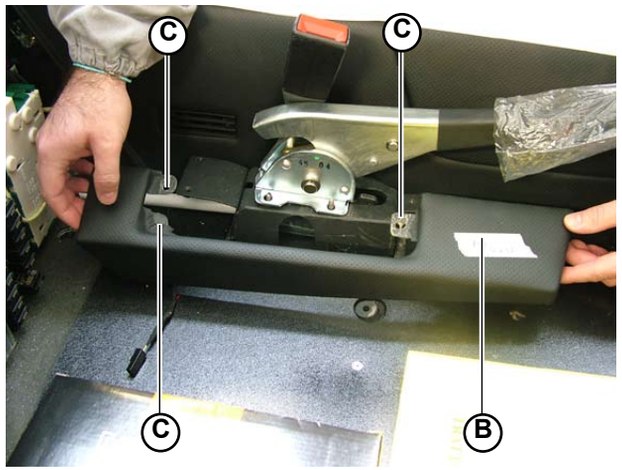

Fig.23

® Automobili Lamborghini S.p.A.
The information and procedures published below are strictly confidential and exclusively for the Lamborghini Dealer Network and Authorized Service Points. All copyrights are property of Automobili Lamborghini S.p.A based on copyright law. All of the PDF chapters in the WEB workshop manuals described below are based on information available at the time of publication. The company reserves the right to make updates and modifications. The following are prohibited: reprinting, reproduction, forwarding to unauthorized people and/or third parties, and translation, including partial, without written authorization from Automobili Lamborghini S.p.A.

M) Disassembling the sun visor

1. Remove the screws that secure the sun visor's 2 couplings (**A-Fig.24**) to the roof (2 screws per coupling).
2. Remove the sun visor (**A-Fig.24**).

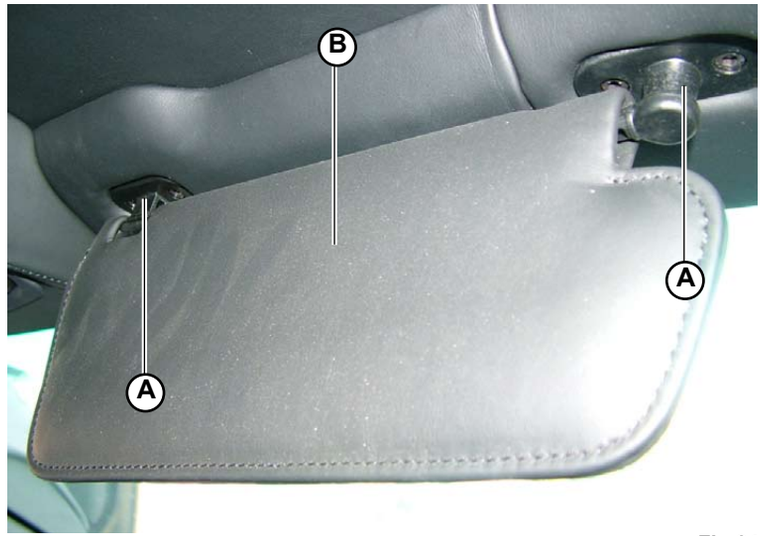

Fig.24

® Automobili Lamborghini S.p.A.
The information and procedures published below are strictly confidential and exclusively for the Lamborghini Dealer Network and Authorized Service Points. All copyrights are property of Automobili Lamborghini S.p.A based on copyright law. All of the PDF chapters in the WEB workshop manuals described below are based on information available at the time of publication. The company reserves the right to make updates and modifications. The following are prohibited: reprinting, reproduction, forwarding to unauthorized people and/or third parties, and translation, including partial, without written authorization from Automobili Lamborghini S.p.A.

N) Disassembling the front cross members

Preliminary operations

- Disassemble the interior roof lamp **(094703)**.
- Disassemble the 2 sun visors **(point M)**.

Dissembling the front cross members

1. Prize up the edge of the 2 front cross members (**A-Fig.25**) to release the finned anchors securing them from their housings (the 2 front cross members are also held in place by the sun visor's hooks (**B-Fig.25**)).

Always take the utmost care not to damage the leather upholstery during disassembly procedures.

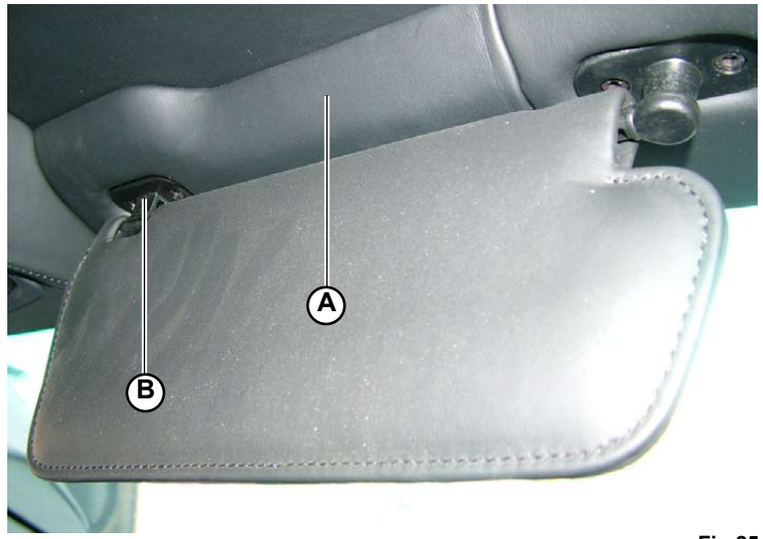

Fig.25

® Automobili Lamborghini S.p.A.
The information and procedures published below are strictly confidential and exclusively for the Lamborghini Dealer Network and Authorized Service Points. All copyrights are property of Automobili Lamborghini S.p.A based on copyright law. All of the PDF chapters in the WEB workshop manuals described below are based on information available at the time of publication. The company reserves the right to make updates and modifications. The following are prohibited: reprinting, reproduction, forwarding to unauthorized people and/or third parties, and translation, including partial, without written authorization from Automobili Lamborghini S.p.A.

O) Disassembling the rear cross member

1. Prize up the edge of the cross member to release the 4 finned anchors (**A-Fig.26**) from their couplings.
2. Remove the rear cross member (**B-Fig.27**).

Always take the utmost care not to damage the leather upholstery during disassembly procedures.

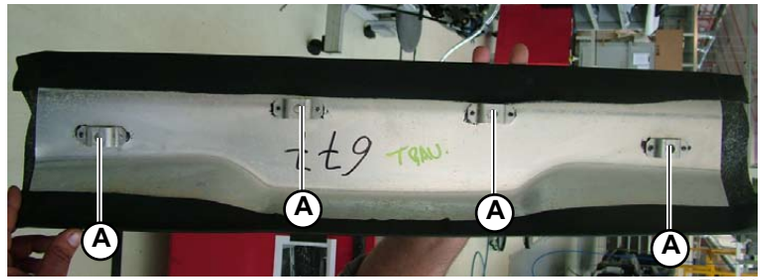

Fig.26

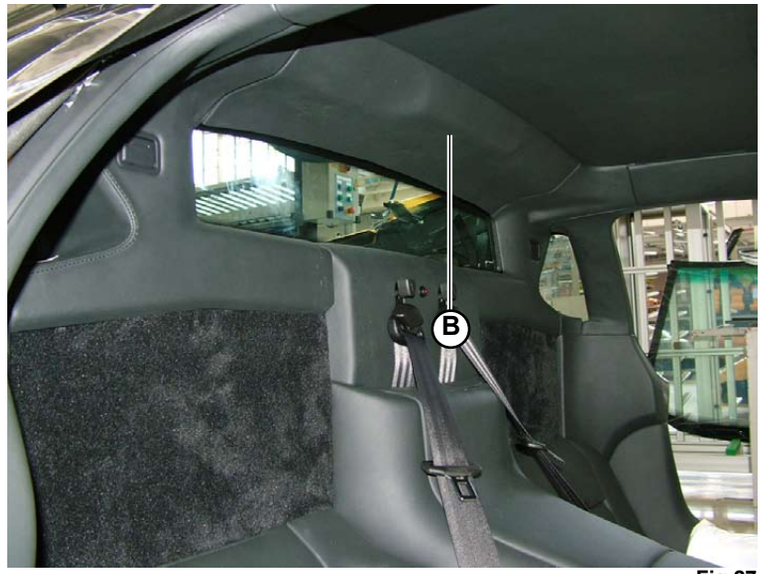

Fig.27

® Automobili Lamborghini S.p.A.
The information and procedures published below are strictly confidential and exclusively for the Lamborghini Dealer Network and Authorized Service Points. All copyrights are property of Automobili Lamborghini S.p.A based on copyright law. All of the PDF chapters in the WEB workshop manuals described below are based on information available at the time of publication. The company reserves the right to make updates and modifications. The following are prohibited: reprinting, reproduction, forwarding to unauthorized people and/or third parties, and translation, including partial, without written authorization from Automobili Lamborghini S.p.A.

P) Disassembling the rear covers

1. Prize up the edge of the rear cover to release the 4 finned anchors (**A-Fig.28**) securing it from their couplings.
2. Remove the rear cover (**B-Fig.29**).

Always take the utmost care not to damage the leather upholstery during disassembly procedures.

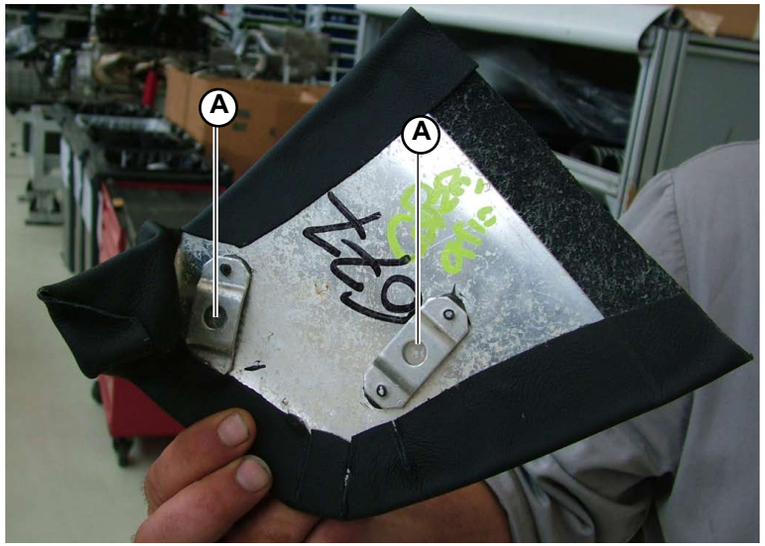

Fig.28

Fig.29

® Automobili Lamborghini S.p.A.
The information and procedures published below are strictly confidential and exclusively for the Lamborghini Dealer Network and Authorized Service Points. All copyrights are property of Automobili Lamborghini S.p.A based on copyright law. All of the PDF chapters in the WEB workshop manuals described below are based on information available at the time of publication. The company reserves the right to make updates and modifications. The following are prohibited: reprinting, reproduction, forwarding to unauthorized people and/or third parties, and translation, including partial, without written authorization from Automobili Lamborghini S.p.A.

Q) Disassembling the shell

Preliminary operations

- Disassemble the rear cover **(Point P)**.

Disassembling the shell

1. Prize up the edge of the shell (**A-Fig.30**) to release the 2 finned anchors securing it from their housings and to release the slot (**B-Fig.30**) from its corresponding coupling.
2. Remove the shell (**C-Fig.31**).

STOP **Always take the utmost care not to damage the leather upholstery during disassembly procedures.**

Fig.30

Fig.31

® Automobili Lamborghini S.p.A.
The information and procedures published below are strictly confidential and exclusively for the Lamborghini Dealer Network and Authorized Service Points. All copyrights are property of Automobili Lamborghini S.p.A based on copyright law. All of the PDF chapters in the WEB workshop manuals described below are based on information available at the time of publication. The company reserves the right to make updates and modifications. The following are prohibited: reprinting, reproduction, forwarding to unauthorized people and/or third parties, and translation, including partial, without written authorization from Automobili Lamborghini S.p.A.

R) Disassembling the side member cover

Preliminary operations

- Disassemble the shell **(Point Q)**.

Disassembling the side member cover

1. Unscrew the 2 screws (**A-Fig.32**) securing the side member cover at the rear.
2. Remove the side member cover (**B-Fig.33**) by releasing the upper slot (**C-Fig.32**) and the 2 lower slots (**D-Fig.32**) from their couplings.

STOP Always take the utmost care not to damage the leather upholstery during disassembly procedures.

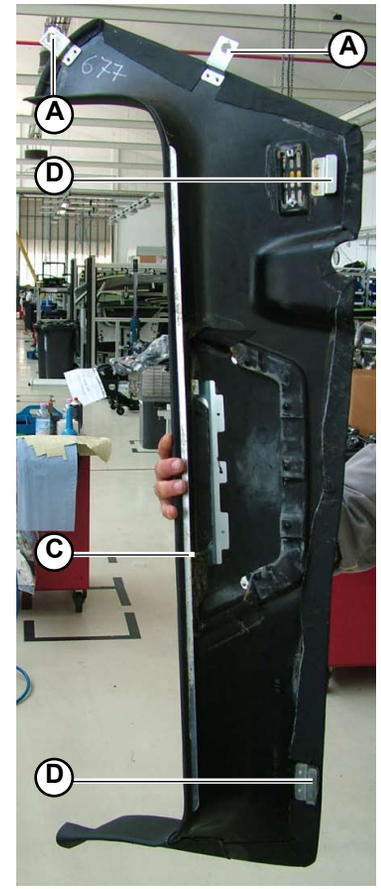

Fig.32

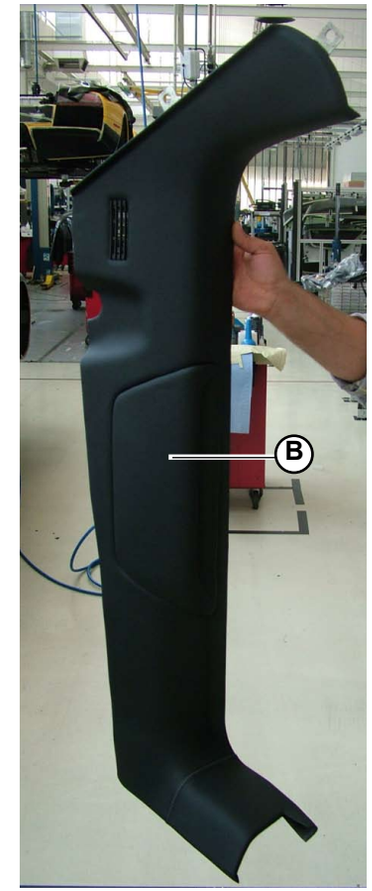

Fig.33

® Automobili Lamborghini S.p.A.
The information and procedures published below are strictly confidential and exclusively for the Lamborghini Dealer Network and Authorized Service Points. All copyrights are property of Automobili Lamborghini S.p.A based on copyright law. All of the PDF chapters in the WEB workshop manuals described below are based on information available at the time of publication. The company reserves the right to make updates and modifications. The following are prohibited: reprinting, reproduction, forwarding to unauthorized people and/or third parties, and translation, including partial, without written authorization from Automobili Lamborghini S.p.A.

S) Disassembling Pillar B

Preliminary operations

- Disassemble the rear cover **(Point P)**.
- Disassemble the shell **(Point Q)**.

Disassembling pillar B

1. Unscrew the screw (**A-Fig.34**) securing pillar B at the bottom.
2. Prize up the edge of pillar B to release the 2 finned anchors (**B-Fig.34**) securing it from their housings.
3. Remove pillar B (**C-Fig.35**).

Fig.34

Always take the utmost care not to damage the leather upholstery during disassembly procedures.

Fig.35

® Automobili Lamborghini S.p.A.
The information and procedures published below are strictly confidential and exclusively for the Lamborghini Dealer Network and Authorized Service Points. All copyrights are property of Automobili Lamborghini S.p.A based on copyright law. All of the PDF chapters in the WEB workshop manuals described below are based on information available at the time of publication. The company reserves the right to make updates and modifications. The following are prohibited: reprinting, reproduction, forwarding to unauthorized people and/or third parties, and translation, including partial, without written authorization from Automobili Lamborghini S.p.A.

T) Disassembling Pillar C

Preliminary operations

- Disassemble the rear cover **(Point P)**.
- Disassemble the shell **(Point Q)**.
- Disassemble pillar B **(Point S)**.
- Disassemble the rear cross member **(Point O)**.

Disassembling pillar C

1. Unscrew the screw (**A-Fig.36**) securing the clothes hook (**B-Fig.37**).
2. Prize up the edge of pillar C to release the 3 finned anchors (**C-Fig.36**) securing it from their housings.
3. Remove pillar C (**D-Fig.37**).

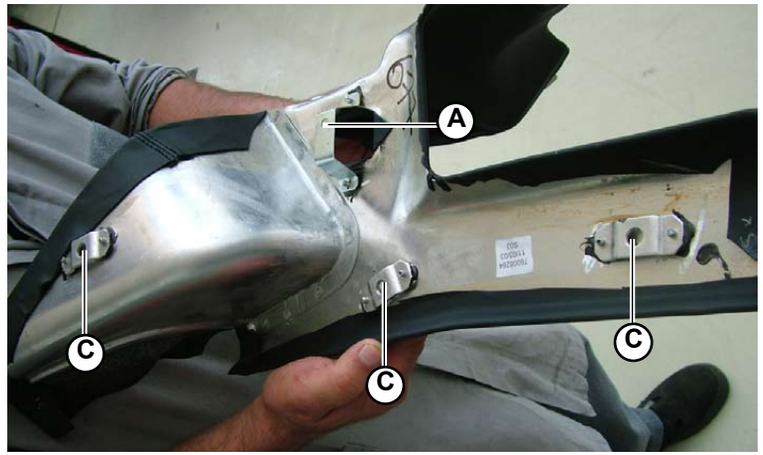

Fig.36

Always take the utmost care not to damage the leather upholstery during disassembly procedures.

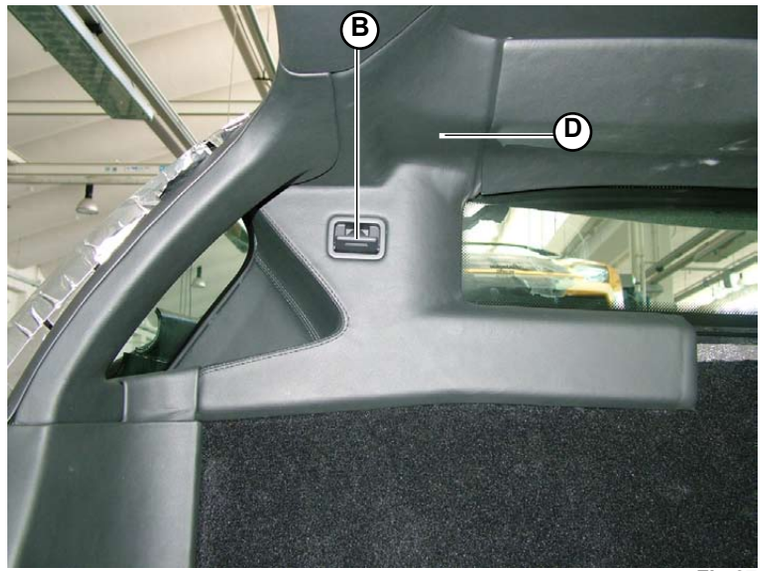

Fig.37

® Automobili Lamborghini S.p.A.
The information and procedures published below are strictly confidential and exclusively for the Lamborghini Dealer Network and Authorized Service Points. All copyrights are property of Automobili Lamborghini S.p.A based on copyright law. All of the PDF chapters in the WEB workshop manuals described below are based on information available at the time of publication. The company reserves the right to make updates and modifications. The following are prohibited: reprinting, reproduction, forwarding to unauthorized people and/or third parties, and translation, including partial, without written authorization from Automobili Lamborghini S.p.A.

U) Disassembling pillar A

Preliminary operations

- Disassemble pillar C **(Point T)**.

Disassembling pillar A

1. Prize up the edge of the pillar A to release the 4 finned anchors (**A-Fig.38**) securing it from their housings and to release the slot (**B-Fig.38**) from its corresponding coupling.
2. Remove pillar A (**C-Fig.39**).

STOP Always take the utmost care not to damage the leather upholstery during disassembly procedures.

Fig.39

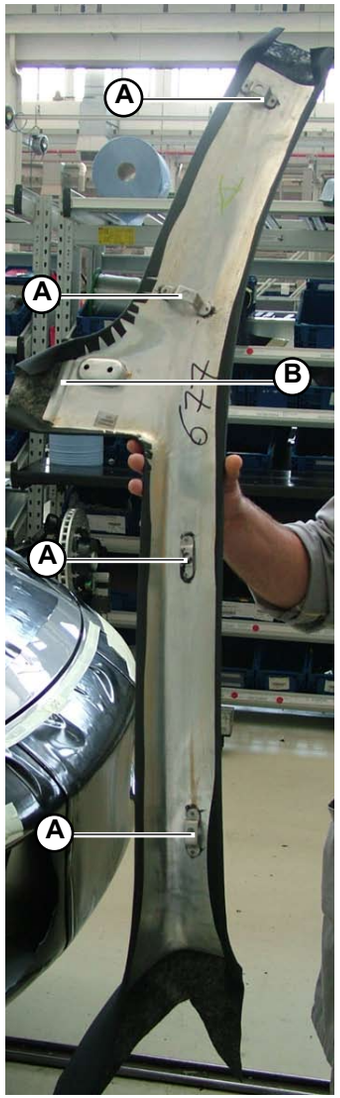

Fig.38

® Automobili Lamborghini S.p.A.
The information and procedures published below are strictly confidential and exclusively for the Lamborghini Dealer Network and Authorized Service Points. All copyrights are property of Automobili Lamborghini S.p.A based on copyright law. All of the PDF chapters in the WEB workshop manuals described below are based on information available at the time of publication. The company reserves the right to make updates and modifications. The following are prohibited: reprinting, reproduction, forwarding to unauthorized people and/or third parties, and translation, including partial, without written authorization from Automobili Lamborghini S.p.A.

V) Disassembling the ceiling upholstery

Preliminary operations

- Disassemble pillar C **(Point T)**.
- Disassemble pillar A **(Point U)**.
- Disassemble the rear cross member **(Point O)**.
- Disassemble the interior roof lamp **(094703)**.
- Disassemble the 2 sun visors **(Point M)**.
- Disassemble the 2 front cross members **(Point N)**.

Fig.40

Disassembling the ceiling upholstery

1. Detach the ceiling upholstery from the glue used to apply it to the ceiling.
2. Remove the ceiling upholstery (**A-Fig.40**).

STOP **Always take the utmost care not to damage the leather upholstery during disassembly procedures.**

® Automobili Lamborghini S.p.A.
The information and procedures published below are strictly confidential and exclusively for the Lamborghini Dealer Network and Authorized Service Points. All copyrights are property of Automobili Lamborghini S.p.A based on copyright law. All of the PDF chapters in the WEB workshop manuals described below are based on information available at the time of publication. The company reserves the right to make updates and modifications. The following are prohibited: reprinting, reproduction, forwarding to unauthorized people and/or third parties, and translation, including partial, without written authorization from Automobili Lamborghini S.p.A.

Z) Disassembling the seat rear cover

1. Unscrew the 3 screws (**A-Fig.41**) securing the seat rear cover to the car floor.
2. Unscrew the 3 screws (**B-Fig.43**) securing the cover to the rear of the car.
3. Release the 2 flanges (**C-Fig.42**) from the side couplings.
4. Remove the rear car floor (**D-Fig.41**).

STOP Always take the utmost care not to damage the leather upholstery during disassembly procedures.

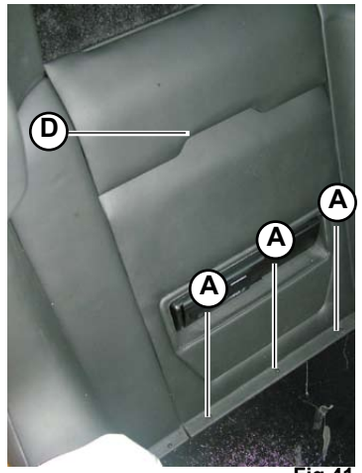

Fig.41

Fig.42

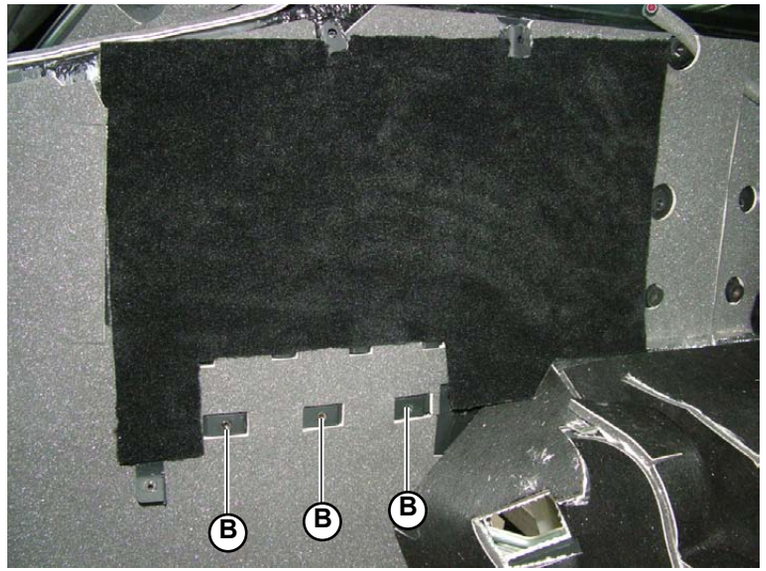

Fig.43

® Automobili Lamborghini S.p.A.
The information and procedures published below are strictly confidential and exclusively for the Lamborghini Dealer Network and Authorized Service Points. All copyrights are property of Automobili Lamborghini S.p.A based on copyright law. All of the PDF chapters in the WEB workshop manuals described below are based on information available at the time of publication. The company reserves the right to make updates and modifications. The following are prohibited: reprinting, reproduction, forwarding to unauthorized people and/or third parties, and translation, including partial, without written authorization from Automobili Lamborghini S.p.A.

W) Disassembling the seat rear cover panels

Preliminary operations

- Disassemble the seat rear cover **(Point Z)**.

Disassembling the seat rear cover panels

1. Unscrew the screw (**A-Fig.44**) securing the panel to the rear of the car.
2. Remove the panel (**A-Fig.45**) by releasing the 2 slots (**C-Fig.44**) from their couplings.

STOP Always take the utmost care not to damage the leather upholstery during disassembly procedures.

Fig.44

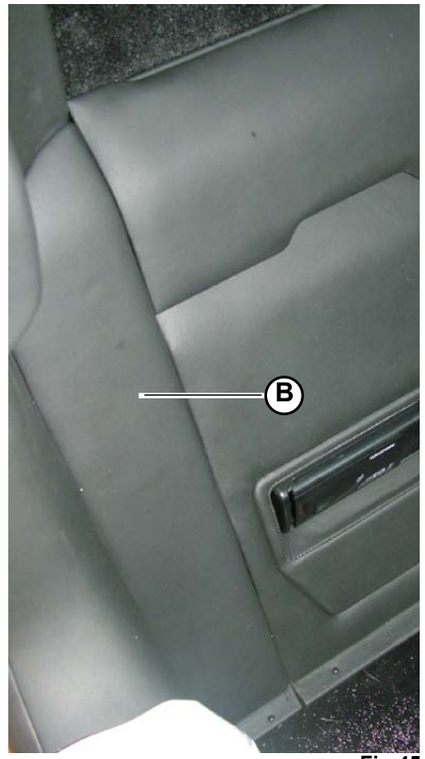

Fig.45

® Automobili Lamborghini S.p.A.
The information and procedures published below are strictly confidential and exclusively for the Lamborghini Dealer Network and Authorized Service Points. All copyrights are property of Automobili Lamborghini S.p.A based on copyright law. All of the PDF chapters in the WEB workshop manuals described below are based on information available at the time of publication. The company reserves the right to make updates and modifications. The following are prohibited: reprinting, reproduction, forwarding to unauthorized people and/or third parties, and translation, including partial, without written authorization from Automobili Lamborghini S.p.A.

Y) Disassembling the rear rug

Preliminary operations

- Remove the seat rear cover **(Point Z)**.
- Disassemble the rear cross member **(Point O)**.
- Disassemble pillar C **(Point T)**.
- Disassemble the seatbelt retractor cover **(086303)**.
- Disassemble the central armrest **(086303)**.

Disassembling the rug

1. Remove the rear rug (**A-Fig.46**) by detaching it from the adhesive securing it to the rear of the car.

Always take the utmost care not to damage the leather upholstery during disassembly procedures.

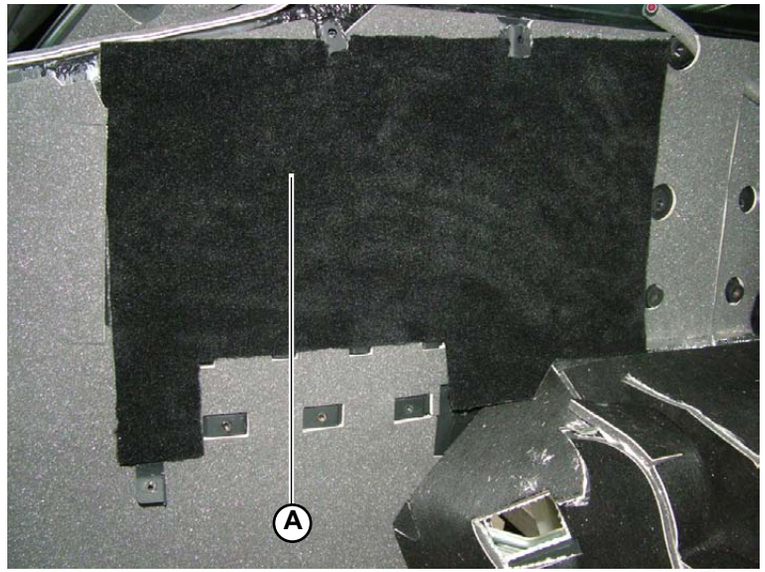

Fig.46

® Automobili Lamborghini S.p.A.
The information and procedures published below are strictly confidential and exclusively for the Lamborghini Dealer Network and Authorized Service Points. All copyrights are property of Automobili Lamborghini S.p.A based on copyright law. All of the PDF chapters in the WEB workshop manuals described below are based on information available at the time of publication. The company reserves the right to make updates and modifications. The following are prohibited: reprinting, reproduction, forwarding to unauthorized people and/or third parties, and translation, including partial, without written authorization from Automobili Lamborghini S.p.A.

This section explains how to assemble:

A) Right side cover
B) Left side cover
C) Right lower dashboard assembly
D) Left lower dashboard assembly
E) Dashboard cover
F) Dashboard
G) Door panel
H) Triangle
I) Door cover
L) Handbrake boot and cover
M) Sun visor
N) Front cross members
O) Rear cross member
P) Rear covers
Q) Shell
R) Side member cover
S) Pillar B
T) Pillar C
U) Pillar A
V) Ceiling upholstery
Z) Seat rear cover
W) Seat rear cover panels
Y) Rear rug

® Automobili Lamborghini S.p.A.
The information and procedures published below are strictly confidential and exclusively for the Lamborghini Dealer Network and Authorized Service Points. All copyrights are property of Automobili Lamborghini S.p.A based on copyright law. All of the PDF chapters in the WEB workshop manuals described below are based on information available at the time of publication. The company reserves the right to make updates and modifications. The following are prohibited: reprinting, reproduction, forwarding to unauthorized people and/or third parties, and translation, including partial, without written authorization from Automobili Lamborghini S.p.A.

A) Assembling the right side cover

1. Connect the airbag connector (**A-Fig.1**) to the airbag key selector (**B-Fig.1**) on the cover.
2. Secure the right side cover (**C-Fig.2**) by tightening the 2 stud bolts (**D-Fig.1**) using the free space left by the right air vent (**E-Fig.2**).

- Assemble the right side air vent **(081905)**.

STOP **Always take the utmost care not to damage the leather upholstery during assembly procedures.**

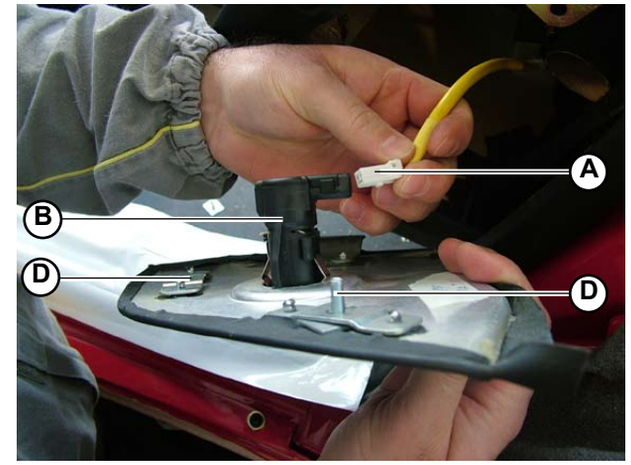

Fig.1

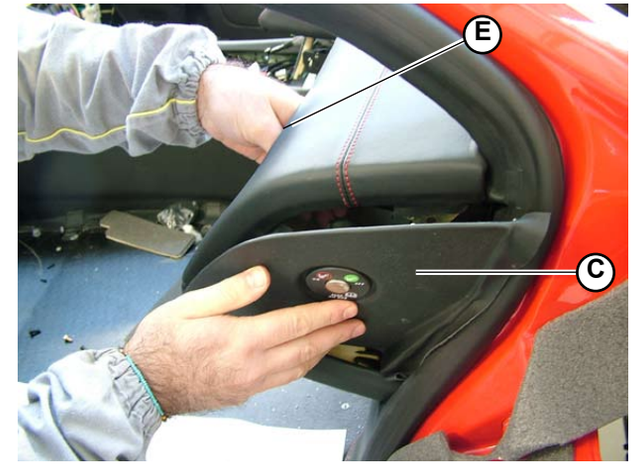

Fig.2

® Automobili Lamborghini S.p.A.
The information and procedures published below are strictly confidential and exclusively for the Lamborghini Dealer Network and Authorized Service Points. All copyrights are property of Automobili Lamborghini S.p.A based on copyright law. All of the PDF chapters in the WEB workshop manuals described below are based on information available at the time of publication. The company reserves the right to make updates and modifications. The following are prohibited: reprinting, reproduction, forwarding to unauthorized people and/or third parties, and translation, including partial, without written authorization from Automobili Lamborghini S.p.A.

B) Assembling the left side cover

1. Secure the left side cover (**A-Fig.3**) to the left lower dashboard assembly (**B-Fig.3**) using the slot (**C-Fig.3**).
2. Press the cover until the plastic hook (**D-Fig.3**) is coupled into its catch (**E-Fig.3**).

STOP Always take the utmost care not to damage the leather upholstery during assembly procedures.

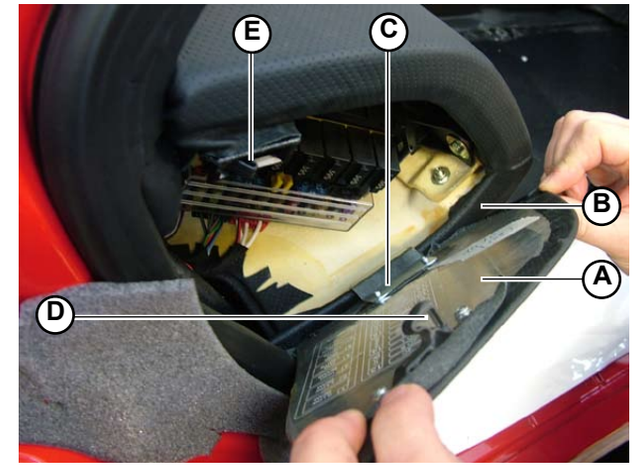

Fig.3

® Automobili Lamborghini S.p.A.
The information and procedures published below are strictly confidential and exclusively for the Lamborghini Dealer Network and Authorized Service Points. All copyrights are property of Automobili Lamborghini S.p.A based on copyright law. All of the PDF chapters in the WEB workshop manuals described below are based on information available at the time of publication. The company reserves the right to make updates and modifications. The following are prohibited: reprinting, reproduction, forwarding to unauthorized people and/or third parties, and translation, including partial, without written authorization from Automobili Lamborghini S.p.A.

C) Assembling the right lower dashboard assembly

1. Secure the 2 finned anchors (**A-Fig.4**) on the lower dashboard assembly to their fixing brackets.
2. Secure the lower dashboard assembly (**B-Fig.4**) to the dashboard using the 2 stud bolts (**C-Fig.5**).

To assemble, access the right stud bolt from the right side cover and access the left stud bolt through the free space left by the disassembled air vent.

- Assemble the central right air vent **(081905)**.
- Assemble the right side cover **(Point A)**.

Always take the utmost care not to damage the leather upholstery during disassembly procedures.

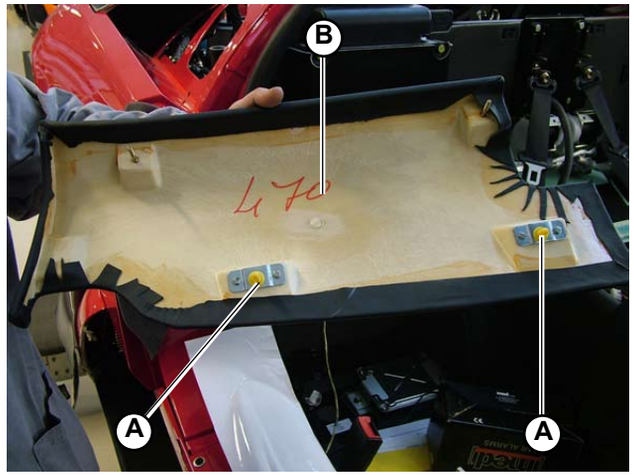

Fig.4

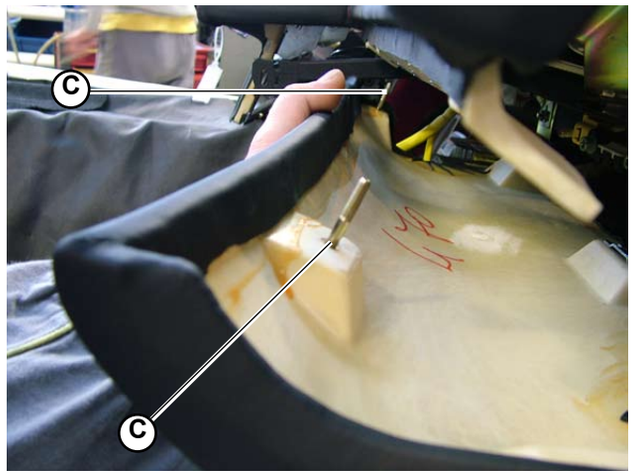

Fig.5

® Automobili Lamborghini S.p.A.
The information and procedures published below are strictly confidential and exclusively for the Lamborghini Dealer Network and Authorized Service Points. All copyrights are property of Automobili Lamborghini S.p.A based on copyright law. All of the PDF chapters in the WEB workshop manuals described below are based on information available at the time of publication. The company reserves the right to make updates and modifications. The following are prohibited: reprinting, reproduction, forwarding to unauthorized people and/or third parties, and translation, including partial, without written authorization from Automobili Lamborghini S.p.A.

D) Assembling the left lower dashboard assembly

1. Tighten the 3 stud bolts (**A-Fig.6**) securing the left lower dashboard assembly (**B-Fig.6**).

To assemble, access the 2 right stud bolts through the free space left by the removed steering wheel cover and access the left stud bolt through the free space left by the removed left side cover.

2. Assemble the engine hood opening lever (**C-Fig.7**) by securing with the relative screw (**D-Fig.7**).

- Assemble the steering wheel cover **(087505)**.
- Assemble the left side cover **(Point B)**.

Always take the utmost care not to damage the leather upholstery during disassembly procedures.

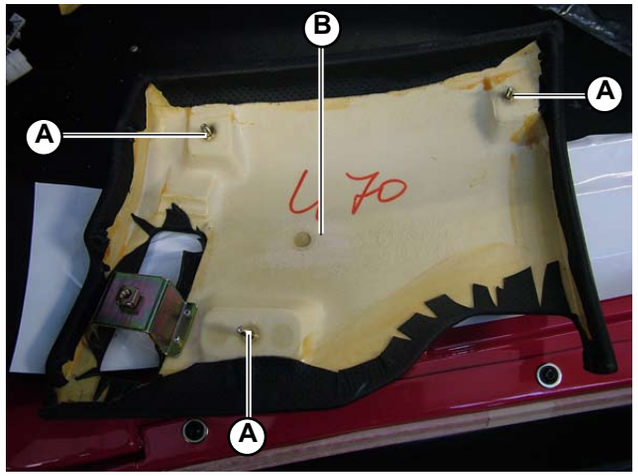

Fig.6

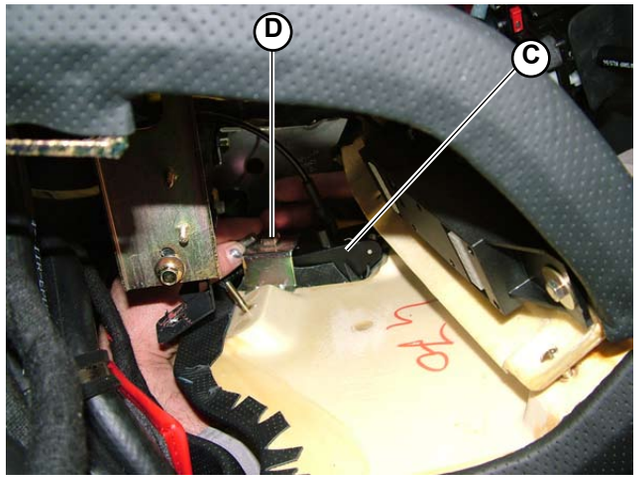

Fig.7

® Automobili Lamborghini S.p.A.
The information and procedures published below are strictly confidential and exclusively for the Lamborghini Dealer Network and Authorized Service Points. All copyrights are property of Automobili Lamborghini S.p.A based on copyright law. All of the PDF chapters in the WEB workshop manuals described below are based on information available at the time of publication. The company reserves the right to make updates and modifications. The following are prohibited: reprinting, reproduction, forwarding to unauthorized people and/or third parties, and translation, including partial, without written authorization from Automobili Lamborghini S.p.A.

E) Assembling the dashboard cover

1. Connect the 2 connections (**A-Fig.8**) to the 2 connectors (**B-Fig.9**) on the rear of the dashboard cover.
2. Insert the slot on the rear of the dashboard cover inside its housing on the dashboard.
3. Access and tighten the 2 knobs (**C-Fig.10**) using the air vent holes to secure the 2 stud bolts (**D-Fig.10**) on the dashboard cover to the 2 flanges (**E-Fig.10**) on the dashboard.
4. Assemble the bracket (**F-Fig.11**) connected to the control unit by tightening the 2 screws.

- Assemble the left side air vent and the left central air vent **(081905)**.
- Assemble the left side cover **(Point B)**.

Always take the utmost care not to damage the leather upholstery during assembly procedures.

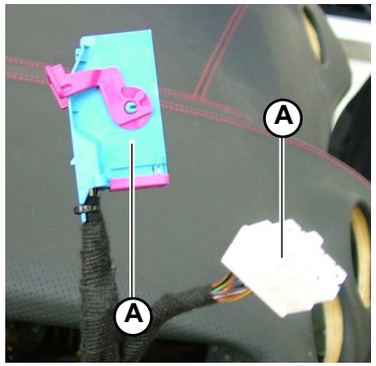

Fig.8

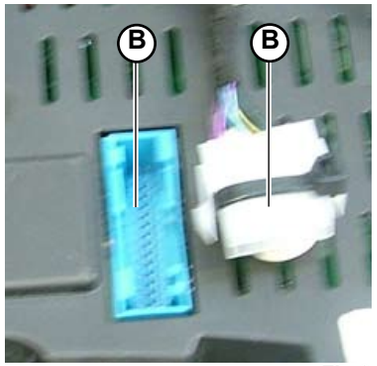

Fig.9

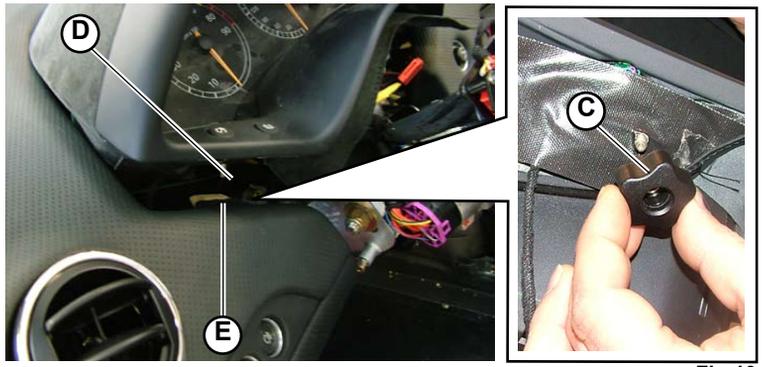

Fig.10

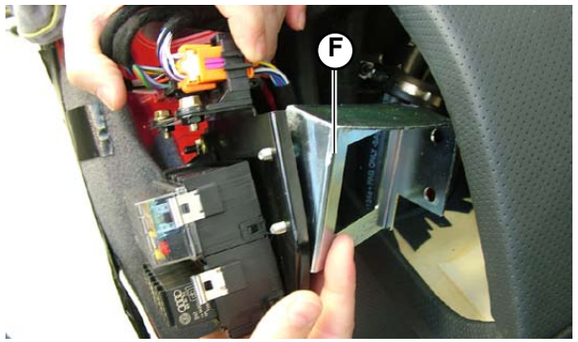

Fig.11

® Automobili Lamborghini S.p.A.
The information and procedures published below are strictly confidential and exclusively for the Lamborghini Dealer Network and Authorized Service Points. All copyrights are property of Automobili Lamborghini S.p.A based on copyright law. All of the PDF chapters in the WEB workshop manuals described below are based on information available at the time of publication. The company reserves the right to make updates and modifications. The following are prohibited: reprinting, reproduction, forwarding to unauthorized people and/or third parties, and translation, including partial, without written authorization from Automobili Lamborghini S.p.A.

F) Assembling the dashboard

1. Connect the cigarette lighter and the sensor connections (**A-Fig.12**) positioned on the upper part of the dashboard.
2. Tighten the 6 screws securing the dashboard to the 2 brackets (**B-Fig.13/14**) (3 screws for each bracket).
3. Secure the front part of the dashboard (**C-Fig.12**) using the 2 stud bolts (**D-Fig.13**).

- Assemble the left lower dashboard assembly **(Point D)**.
- Assemble the right lower dashboard assembly **(Point C)**.
- Assemble the dashboard cover **(086805)**.
- Assemble the left side panel **(086305)**.
- Assemble the right side panel **(086305)**.
- Assemble the air conditioner grille **(081605)**.
- Assemble the car hi-fi system **(097505)**.
- Assemble the 4 air vents **(081905)**.
- Assemble the left side cover **(Point B)**.
- Assemble the right side cover **(Point A)**.

STOP **Always take the utmost care not to damage the leather upholstery during assembly procedures.**

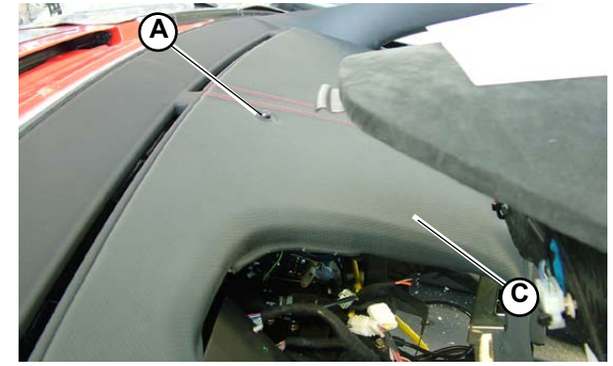

Fig.12

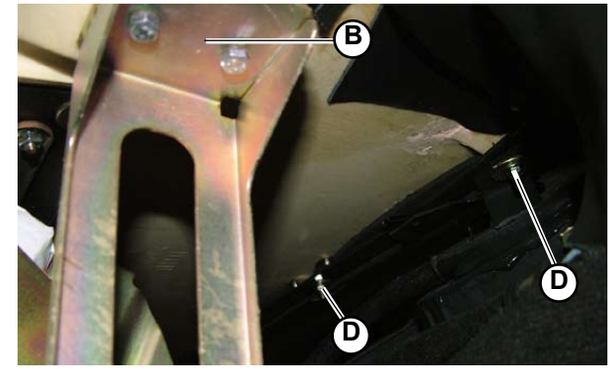

Fig.13

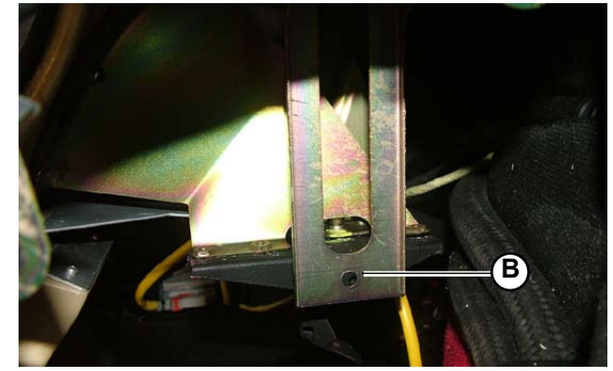

Fig.14

® Automobili Lamborghini S.p.A.
The information and procedures published below are strictly confidential and exclusively for the Lamborghini Dealer Network and Authorized Service Points. All copyrights are property of Automobili Lamborghini S.p.A based on copyright law. All of the PDF chapters in the WEB workshop manuals described below are based on information available at the time of publication. The company reserves the right to make updates and modifications. The following are prohibited: reprinting, reproduction, forwarding to unauthorized people and/or third parties, and translation, including partial, without written authorization from Automobili Lamborghini S.p.A.

G) Assembling the door panel

1. Press the panel (**A-Fig.15**) into its housing in the door until the 4 finned anchors enter their couplings (**B-Fig.16**).

STOP Always take the utmost care not to damage the leather upholstery during assembly procedures.

Fig.15

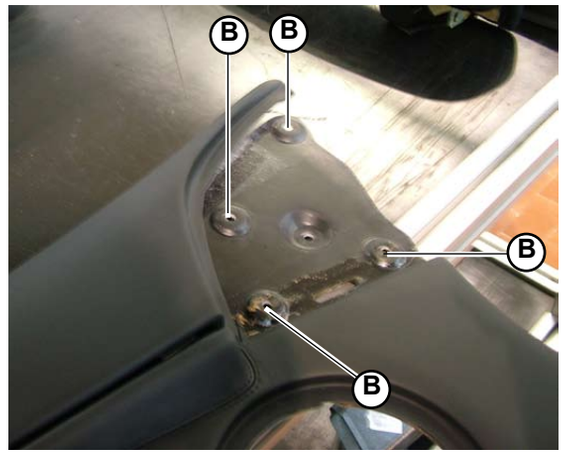

Fig.16

® Automobili Lamborghini S.p.A.
The information and procedures published below are strictly confidential and exclusively for the Lamborghini Dealer Network and Authorized Service Points. All copyrights are property of Automobili Lamborghini S.p.A based on copyright law. All of the PDF chapters in the WEB workshop manuals described below are based on information available at the time of publication. The company reserves the right to make updates and modifications. The following are prohibited: reprinting, reproduction, forwarding to unauthorized people and/or third parties, and translation, including partial, without written authorization from Automobili Lamborghini S.p.A.

H) Assembling the door triangle

1. Press the triangle (**A-Fig.17**) into its housing in the door until the 3 finned anchors enter their couplings (**B-Fig.18**).

STOP Always take the utmost care not to damage the leather upholstery during assembly procedures.

Fig.17

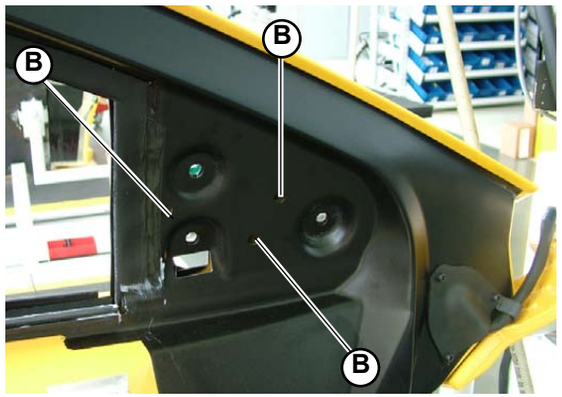

Fig.18

® Automobili Lamborghini S.p.A.
The information and procedures published below are strictly confidential and exclusively for the Lamborghini Dealer Network and Authorized Service Points. All copyrights are property of Automobili Lamborghini S.p.A based on copyright law. All of the PDF chapters in the WEB workshop manuals described below are based on information available at the time of publication. The company reserves the right to make updates and modifications. The following are prohibited: reprinting, reproduction, forwarding to unauthorized people and/or third parties, and translation, including partial, without written authorization from Automobili Lamborghini S.p.A.

I) Assembling the door cover

1. Position the cover and tighten the mounting screw (**A-Fig.19**).
2. Position the interior door handle and secure it to the cover using the screw.
3. Tighten the screw (**B-Fig.20**) under the handle to secure it to the door.
4. Tighten the screw (**C-Fig.21**) on the rear of the door inside the light housing.

- Assemble the car hi-fi system loudspeaker **(097505)**.
- Assemble the door triangle **(Point H)**.
- Assemble the door panel **(Point G)**.

STOP **Always take the utmost care not to damage the leather upholstery during assembly procedures.**

Fig.19

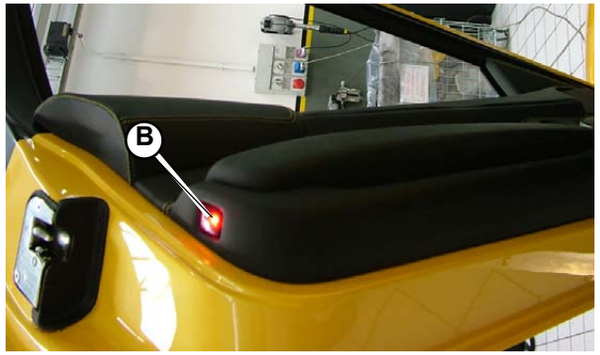

Fig.20

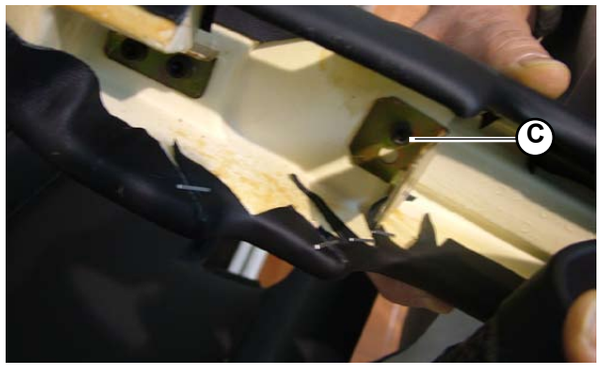

Fig.21

® Automobili Lamborghini S.p.A.
The information and procedures published below are strictly confidential and exclusively for the Lamborghini Dealer Network and Authorized Service Points. All copyrights are property of Automobili Lamborghini S.p.A based on copyright law. All of the PDF chapters in the WEB workshop manuals described below are based on information available at the time of publication. The company reserves the right to make updates and modifications. The following are prohibited: reprinting, reproduction, forwarding to unauthorized people and/or third parties, and translation, including partial, without written authorization from Automobili Lamborghini S.p.A.

L) Assembling the handbrake boot and cover

1. Assemble the handbrake cover (**A-Fig.22**) by securing the 3 screws (**B-Fig.22**) to the car floor.
2. Insert the boot on the handbrake. Exert a slight pressure until the edges of the plate (**C-Fig.23**) enter the special housing on the cover.

STOP **Always take the utmost care not to damage the leather upholstery during assembly procedures.**

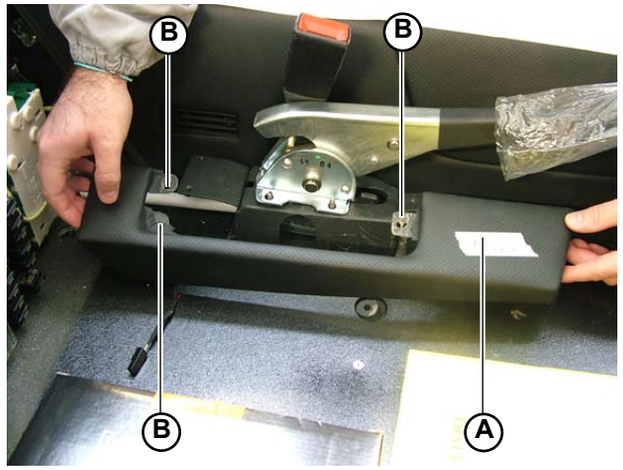

Fig.22

Fig.23

® Automobili Lamborghini S.p.A.
The information and procedures published below are strictly confidential and exclusively for the Lamborghini Dealer Network and Authorized Service Points. All copyrights are property of Automobili Lamborghini S.p.A based on copyright law. All of the PDF chapters in the WEB workshop manuals described below are based on information available at the time of publication. The company reserves the right to make updates and modifications. The following are prohibited: reprinting, reproduction, forwarding to unauthorized people and/or third parties, and translation, including partial, without written authorization from Automobili Lamborghini S.p.A.

M) Assembling the sun visor

1. Secure the sun visor (**A-Fig.24**) using the 2 couplings (2 mounting screws per sun visor coupling).

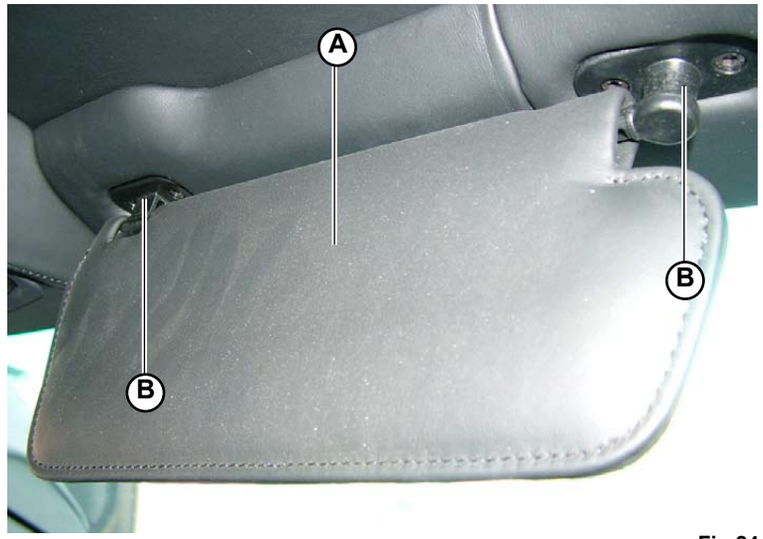

Fig.24

® Automobili Lamborghini S.p.A.
The information and procedures published below are strictly confidential and exclusively for the Lamborghini Dealer Network and Authorized Service Points. All copyrights are property of Automobili Lamborghini S.p.A based on copyright law. All of the PDF chapters in the WEB workshop manuals described below are based on information available at the time of publication. The company reserves the right to make updates and modifications. The following are prohibited: reprinting, reproduction, forwarding to unauthorized people and/or third parties, and translation, including partial, without written authorization from Automobili Lamborghini S.p.A.

N) Assembling the front cross members

1. Exert pressure on the surfaces of the front cross members (**A-Fig.25**) to insert the finned anchors into their housings (the 2 front cross members are also held in place through subsequent assembly of the sun visors (**B-Fig.25**).

- Assemble the 2 sun visors **(Point M)**.
- Assemble the interior roof lamp **(094705)**.

STOP Always take the utmost care not to damage the leather upholstery during assembly procedures.

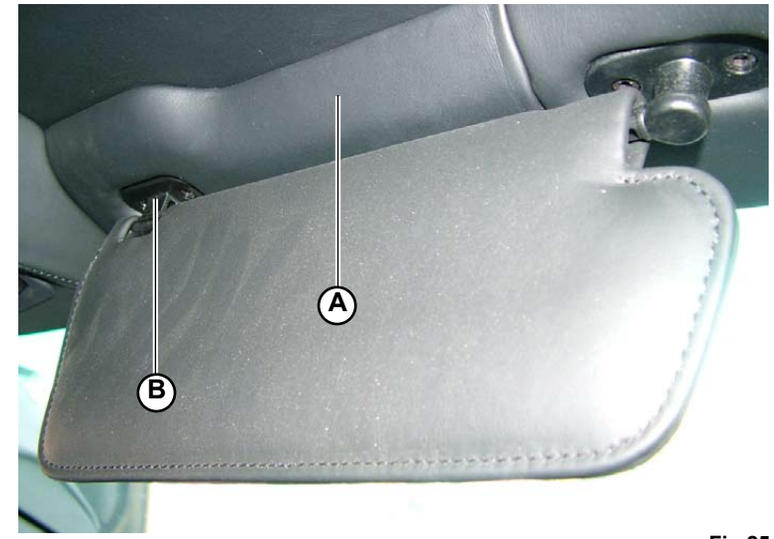

Fig.25

® Automobili Lamborghini S.p.A.
The information and procedures published below are strictly confidential and exclusively for the Lamborghini Dealer Network and Authorized Service Points. All copyrights are property of Automobili Lamborghini S.p.A based on copyright law. All of the PDF chapters in the WEB workshop manuals described below are based on information available at the time of publication. The company reserves the right to make updates and modifications. The following are prohibited: reprinting, reproduction, forwarding to unauthorized people and/or third parties, and translation, including partial, without written authorization from Automobili Lamborghini S.p.A.

O) Assembling the rear cross member

1. Exert pressure on the surface of the cross member (**A-Fig.26**) to insert the 4 finned anchors (**B-Fig.27**) into their couplings.

STOP **Always take the utmost care not to damage the leather upholstery during assembly procedures.**

Fig.26

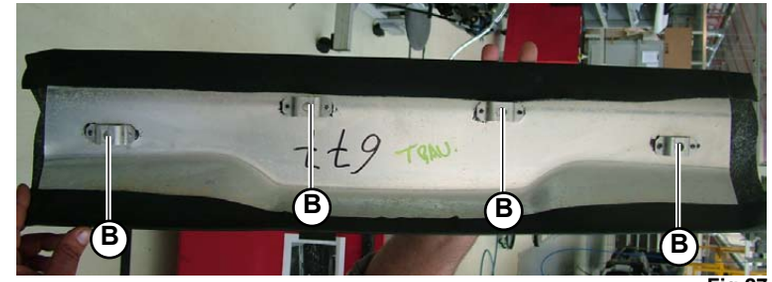

Fig.27

® Automobili Lamborghini S.p.A.
The information and procedures published below are strictly confidential and exclusively for the Lamborghini Dealer Network and Authorized Service Points. All copyrights are property of Automobili Lamborghini S.p.A based on copyright law. All of the PDF chapters in the WEB workshop manuals described below are based on information available at the time of publication. The company reserves the right to make updates and modifications. The following are prohibited: reprinting, reproduction, forwarding to unauthorized people and/or third parties, and translation, including partial, without written authorization from Automobili Lamborghini S.p.A.

P) Assembling the rear covers

1. Exert pressure on the surface of the rear cover (**A-Fig.28**) to insert the 4 finned anchors (**B-Fig.29**) into their couplings.

Always take the utmost care not to damage the leather upholstery during assembly procedures.

Fig.28

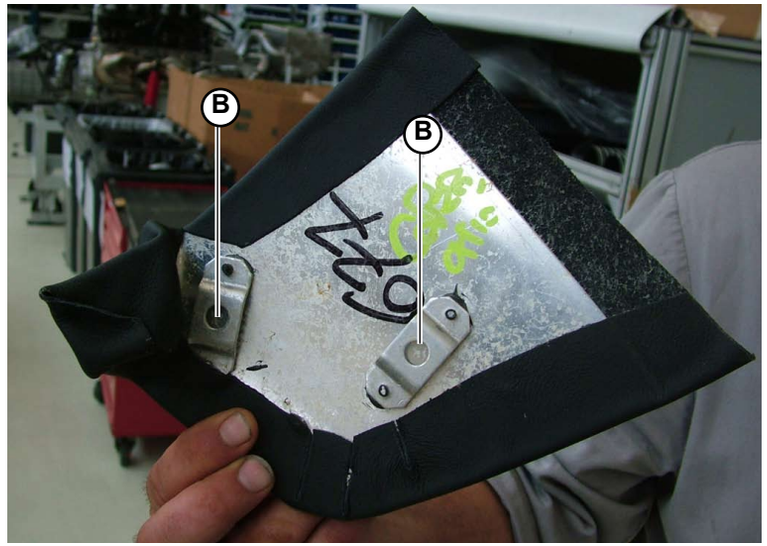

Fig.29

® Automobili Lamborghini S.p.A.
The information and procedures published below are strictly confidential and exclusively for the Lamborghini Dealer Network and Authorized Service Points. All copyrights are property of Automobili Lamborghini S.p.A based on copyright law. All of the PDF chapters in the WEB workshop manuals described below are based on information available at the time of publication. The company reserves the right to make updates and modifications. The following are prohibited: reprinting, reproduction, forwarding to unauthorized people and/or third parties, and translation, including partial, without written authorization from Automobili Lamborghini S.p.A.

Q) Assembling the shell

1. Insert the slot (**A-Fig.30**) onto its coupling and exert pressure on the surface of the shell (**B-Fig.31**) to insert the 2 finned anchors into their housings.

- Assemble the rear cover (**Point P**).

STOP **Always take the utmost care not to damage the leather upholstery during assembly procedures.**

Fig.30

Fig.31

® Automobili Lamborghini S.p.A.
The information and procedures published below are strictly confidential and exclusively for the Lamborghini Dealer Network and Authorized Service Points. All copyrights are property of Automobili Lamborghini S.p.A based on copyright law. All of the PDF chapters in the WEB workshop manuals described below are based on information available at the time of publication. The company reserves the right to make updates and modifications. The following are prohibited: reprinting, reproduction, forwarding to unauthorized people and/or third parties, and translation, including partial, without written authorization from Automobili Lamborghini S.p.A.

R) Assembling the side member cover

1. Position the side member cover (**A-Fig.33**) by inserting the upper slot (**B-Fig.33**) and the 2 lower slots (**C-Fig.33**) into their couplings.
2. Tighten the 2 mounting screws (**D-Fig.33**).

- Assemble the shell **(Point Q)**.

Always take the utmost care not to damage the leather upholstery during assembly procedures.

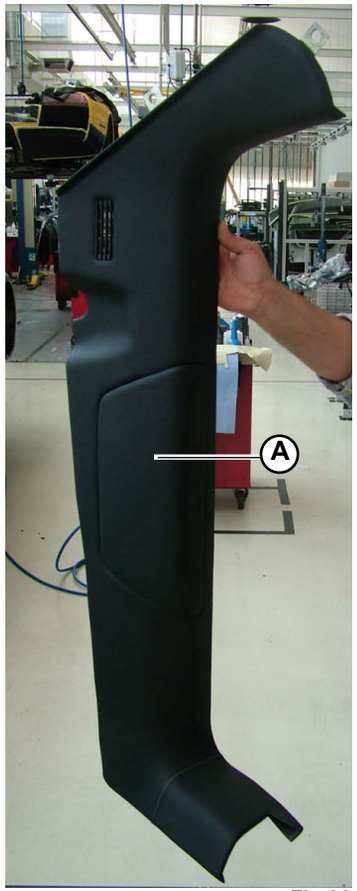

Fig.32

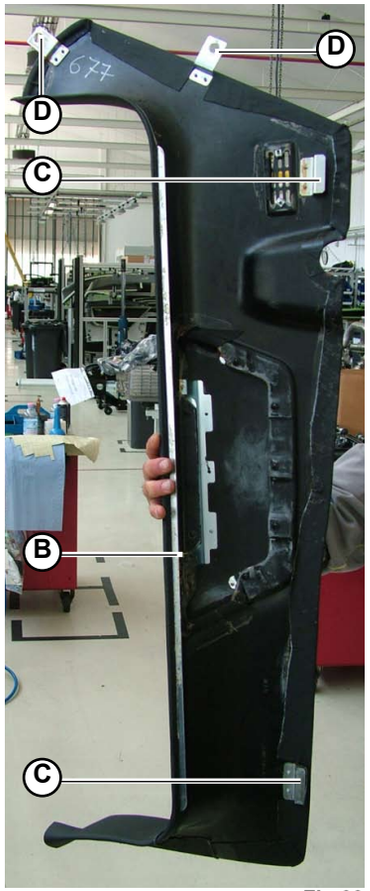

Fig.33

® Automobili Lamborghini S.p.A.
The information and procedures published below are strictly confidential and exclusively for the Lamborghini Dealer Network and Authorized Service Points. All copyrights are property of Automobili Lamborghini S.p.A based on copyright law. All of the PDF chapters in the WEB workshop manuals described below are based on information available at the time of publication. The company reserves the right to make updates and modifications. The following are prohibited: reprinting, reproduction, forwarding to unauthorized people and/or third parties, and translation, including partial, without written authorization from Automobili Lamborghini S.p.A.

S) Assembling Pillar B

1. Exert pressure on the surface of pillar B (**A-Fig.34**) to insert the 2 finned anchors (**B-Fig.35**) into their housings.
2. Tighten the screw (**C-Fig.35**) to secure pillar B at the bottom.

- Assemble the shell **(Point Q)**.
- Assemble the rear cover **(Point P)**.

STOP **Always take the utmost care not to damage the leather upholstery during assembly procedures.**

Fig.34

Fig.35

® Automobili Lamborghini S.p.A.
The information and procedures published below are strictly confidential and exclusively for the Lamborghini Dealer Network and Authorized Service Points. All copyrights are property of Automobili Lamborghini S.p.A based on copyright law. All of the PDF chapters in the WEB workshop manuals described below are based on information available at the time of publication. The company reserves the right to make updates and modifications. The following are prohibited: reprinting, reproduction, forwarding to unauthorized people and/or third parties, and translation, including partial, without written authorization from Automobili Lamborghini S.p.A.

T) Assembling Pillar C

1. Exert pressure on the surface of pillar C (**A-Fig.36**) to insert the 3 finned anchors (**B-Fig.37**) into their housings.
2. Tighten the screw (**C-Fig.37**) to secure the clothes hook (**D-Fig.36**).

- Assemble the rear cross member **(Point O)**.
- Assemble pillar B **(Point S)**.
- Assemble the shell **(Point Q)**.
- Assemble the rear cover **(Point P)**.

STOP **Always take the utmost care not to damage the leather upholstery during assembly procedures.**

Fig.36

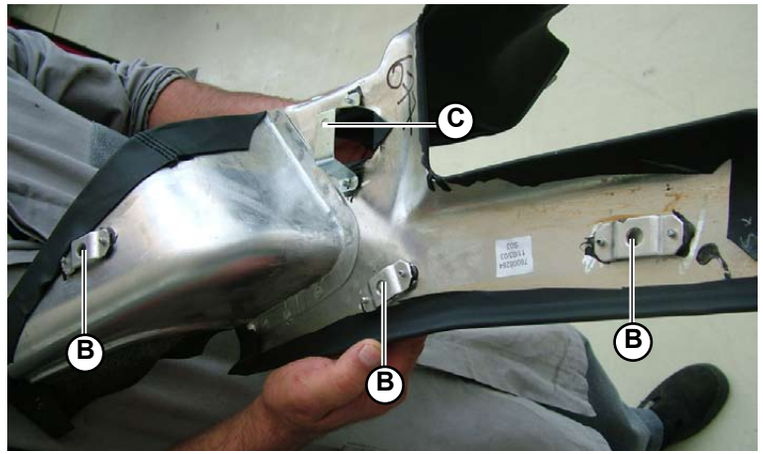

Fig.37

® Automobili Lamborghini S.p.A.
The information and procedures published below are strictly confidential and exclusively for the Lamborghini Dealer Network and Authorized Service Points. All copyrights are property of Automobili Lamborghini S.p.A based on copyright law. All of the PDF chapters in the WEB workshop manuals described below are based on information available at the time of publication. The company reserves the right to make updates and modifications. The following are prohibited: reprinting, reproduction, forwarding to unauthorized people and/or third parties, and translation, including partial, without written authorization from Automobili Lamborghini S.p.A.

U) Assembling pillar A

1. Exert pressure on the surface of pillar A (**A-Fig.38**) to insert the 4 finned anchors (**B-Fig.39**) into their housings and to insert the slot (**C-Fig.39**) into its coupling.

- Assemble pillar C **(Point T)**.

Always take the utmost care not to damage the leather upholstery during assembly procedures.

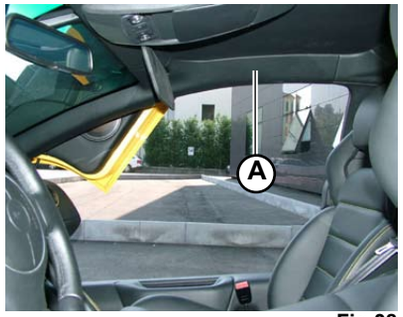

Fig.38

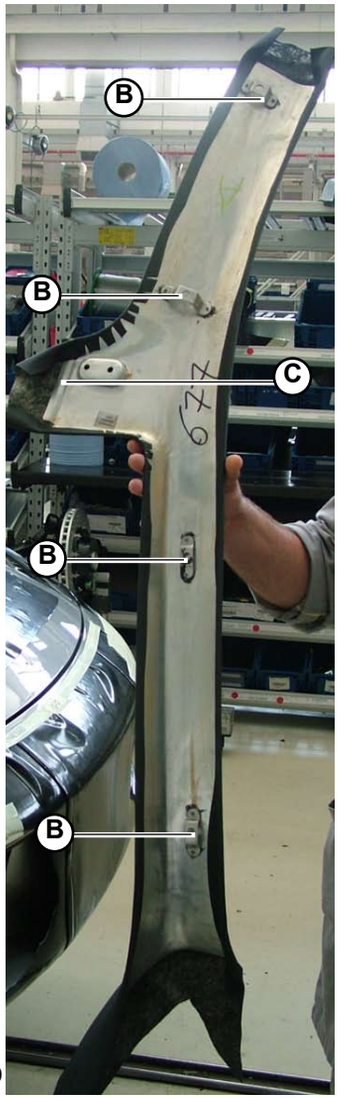

Fig.39

® Automobili Lamborghini S.p.A.
The information and procedures published below are strictly confidential and exclusively for the Lamborghini Dealer Network and Authorized Service Points. All copyrights are property of Automobili Lamborghini S.p.A based on copyright law. All of the PDF chapters in the WEB workshop manuals described below are based on information available at the time of publication. The company reserves the right to make updates and modifications. The following are prohibited: reprinting, reproduction, forwarding to unauthorized people and/or third parties, and translation, including partial, without written authorization from Automobili Lamborghini S.p.A.

V) Assembling the ceiling upholstery

1. Secure the upholstery (**A-Fig.40**) to the ceiling using the special adhesive.

- Assemble the 2 front cross members **(Point N)**.
- Assemble the 2 sun visors **(Point M)**.
- Assemble the interior roof lamp **(094705)**.
- Assemble the rear cross member **(Point O)**.
- Assemble pillar A **(Point U)**.
- Assemble pillar C **(Point T)**.

Fig.40

Always take the utmost care not to damage the leather upholstery during assembly procedures. Always stretch the upholstery well to prevent the formation of creases and air bubbles underneath it.

® Automobili Lamborghini S.p.A.
The information and procedures published below are strictly confidential and exclusively for the Lamborghini Dealer Network and Authorized Service Points. All copyrights are property of Automobili Lamborghini S.p.A based on copyright law. All of the PDF chapters in the WEB workshop manuals described below are based on information available at the time of publication. The company reserves the right to make updates and modifications. The following are prohibited: reprinting, reproduction, forwarding to unauthorized people and/or third parties, and translation, including partial, without written authorization from Automobili Lamborghini S.p.A.

Z) Assembling the seat rear cover

1. Position the rear car floor (**A-Fig.42**) by inserting the 2 flanges (**B-Fig.41**) into the side couplings.
2. Tighten the 3 screws (**C-Fig.43**) to secure the cover to the rear of the car.
3. Tighten the 3 screws (**D-Fig.42**) to secure the seat rear cover to the car floor.

STOP Always take the utmost care not to damage the leather upholstery during assembly procedures.

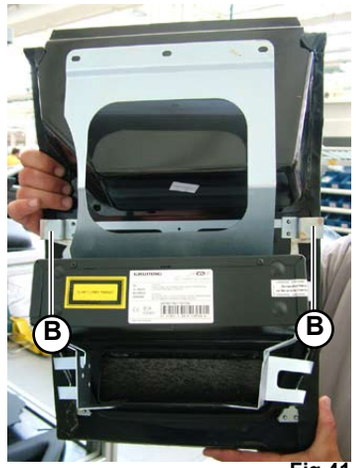

Fig.41

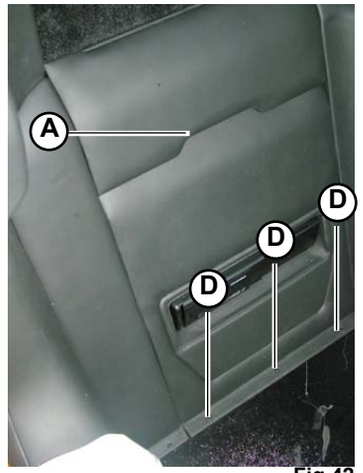

Fig.42

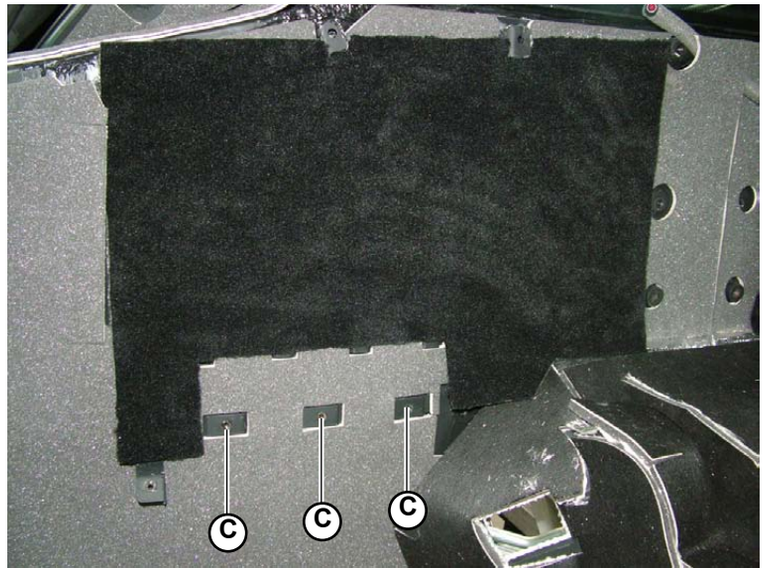

Fig.43

® Automobili Lamborghini S.p.A.
The information and procedures published below are strictly confidential and exclusively for the Lamborghini Dealer Network and Authorized Service Points. All copyrights are property of Automobili Lamborghini S.p.A based on copyright law. All of the PDF chapters in the WEB workshop manuals described below are based on information available at the time of publication. The company reserves the right to make updates and modifications. The following are prohibited: reprinting, reproduction, forwarding to unauthorized people and/or third parties, and translation, including partial, without written authorization from Automobili Lamborghini S.p.A.

W) Assembling the seat rear cover panels

1. Position the panel (**A-Fig.44**) by inserting the 2 slots (**B-Fig.45**) into their couplings.
2. Tighten the screw (**C-Fig.45**) to secure the panel to the rear of the car.

- Assemble the seat rear cover **(Punto Z)**.

STOP **Always take the utmost care not to damage the leather upholstery during assembly procedures.**

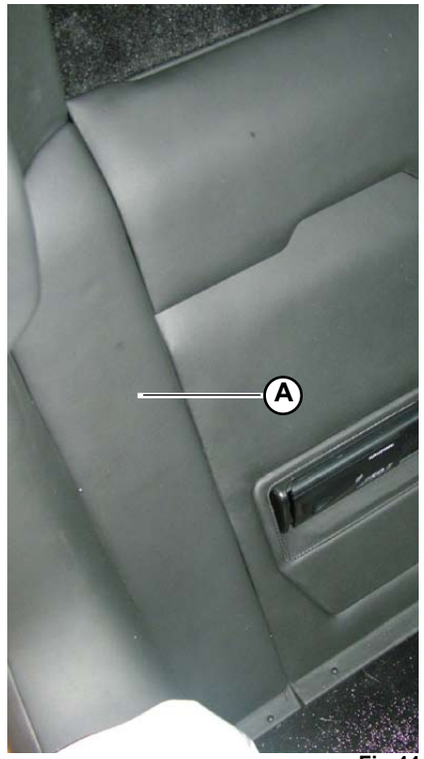

Fig.44

Fig.45

® Automobili Lamborghini S.p.A.
The information and procedures published below are strictly confidential and exclusively for the Lamborghini Dealer Network and Authorized Service Points. All copyrights are property of Automobili Lamborghini S.p.A based on copyright law. All of the PDF chapters in the WEB workshop manuals described below are based on information available at the time of publication. The company reserves the right to make updates and modifications. The following are prohibited: reprinting, reproduction, forwarding to unauthorized people and/or third parties, and translation, including partial, without written authorization from Automobili Lamborghini S.p.A.

Y) Assembling the rear rug

1. Position the rear rug (**A-Fig.46**) by securing it to the rear of the car using the special adhesive.

- Assemble the central armrest **(086305)**.
- Assemble the seatbelt retractor cover **(086305)**.
- Assemble pillar C **(Point T)**.
- Assemble the rear cross member **(Point O)**.
- Assemble the seat rear cover **(Point Z)**.

STOP **Always take the utmost care not to damage the leather upholstery during assembly procedures. Always stretch the rug well to prevent the formation of creases and air bubbles underneath it.**

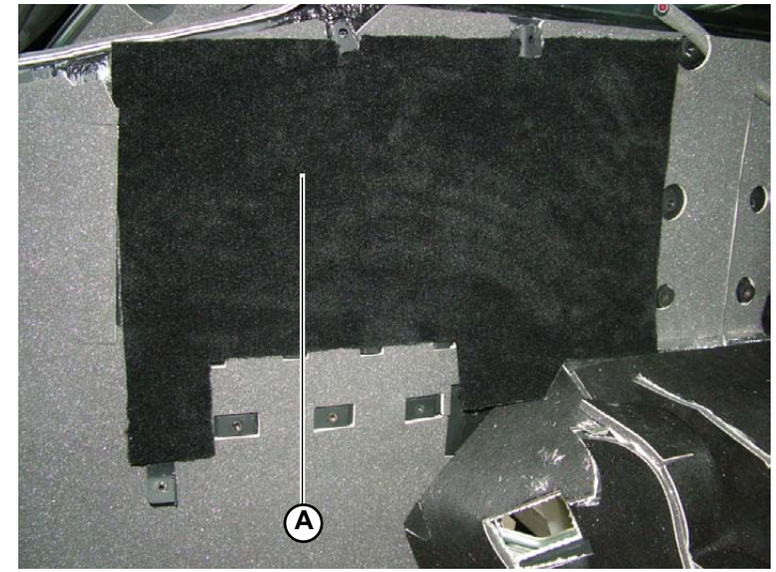

Fig.46

® Automobili Lamborghini S.p.A.
The information and procedures published below are strictly confidential and exclusively for the Lamborghini Dealer Network and Authorized Service Points. All copyrights are property of Automobili Lamborghini S.p.A based on copyright law. All of the PDF chapters in the WEB workshop manuals described below are based on information available at the time of publication. The company reserves the right to make updates and modifications. The following are prohibited: reprinting, reproduction, forwarding to unauthorized people and/or third parties, and translation, including partial, without written authorization from Automobili Lamborghini S.p.A.

This section explains how to disassemble:

A) Steering wheel cover
B) Steering wheel

A) Disassembling the steering wheel cover

1. Unscrew the 8 screws (**A-Fig.1/2**) securing the lower part of the steering wheel cover.
2. Remove the lower part of the cover (**B-Fig.2**).
3. Remove the upper part of the cover (**C-Fig.2**).

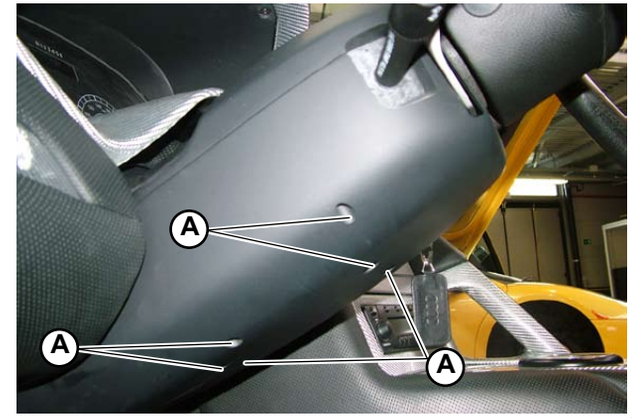

Fig.1

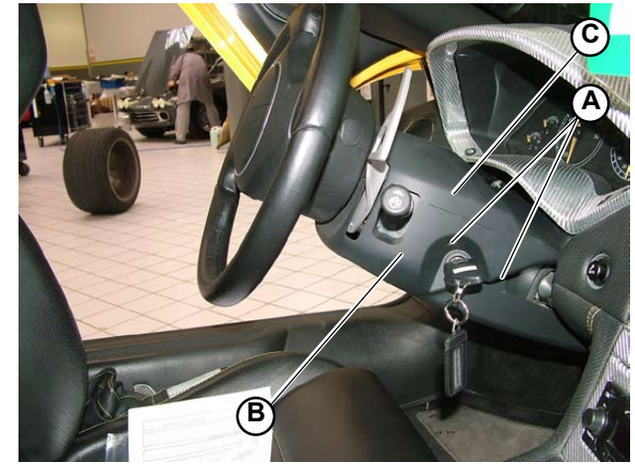

Fig.2

® Automobili Lamborghini S.p.A.
The information and procedures published below are strictly confidential and exclusively for the Lamborghini Dealer Network and Authorized Service Points. All copyrights are property of Automobili Lamborghini S.p.A based on copyright law. All of the PDF chapters in the WEB workshop manuals described below are based on information available at the time of publication. The company reserves the right to make updates and modifications. The following are prohibited: reprinting, reproduction, forwarding to unauthorized people and/or third parties, and translation, including partial, without written authorization from Automobili Lamborghini S.p.A.

B) Disassembling the steering wheel

Preliminary operations

- Disassemble the driver airbag module **(088003)**.
- Disassemble the steering wheel cover **(Point A)**.

Wheel disassembly

1. Disconnect the steering wheel from the airbag connection (pigtail connection)(**A-Fig.3**).

STOP **After disassembling the pigtail connection (A-Fig.3), check that it has been secured with a clamp (B-Fig.3) to prevent it from rotating on itself and being damaged.**

2. Disconnect the horn connection (**B-Fig.4**).

3. Unscrew the ring nut with washer (**C-Fig.4**) securing the steering wheel to the steering column.

4. Extract the steering wheel.

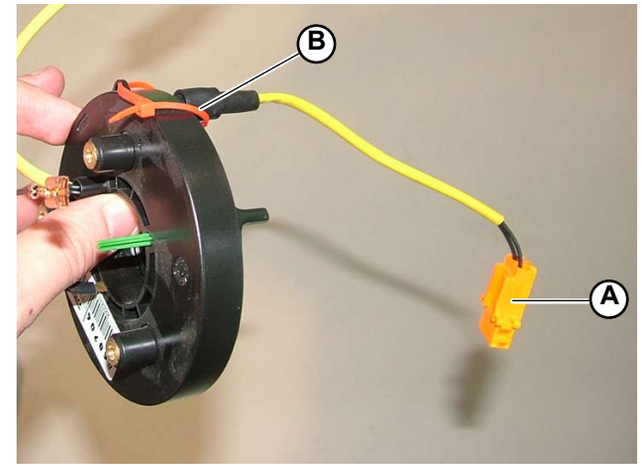

Fig.3

Fig.4

® Automobili Lamborghini S.p.A.
The information and procedures published below are strictly confidential and exclusively for the Lamborghini Dealer Network and Authorized Service Points. All copyrights are property of Automobili Lamborghini S.p.A based on copyright law. All of the PDF chapters in the WEB workshop manuals described below are based on information available at the time of publication. The company reserves the right to make updates and modifications. The following are prohibited: reprinting, reproduction, forwarding to unauthorized people and/or third parties, and translation, including partial, without written authorization from Automobili Lamborghini S.p.A.

This section explains how to assemble:

A) Steering wheel cover
B) Steering wheel

A) Assembling the steering wheel cover

1. Position the upper part of the cover (**A-Fig.1**).
2. Position the lower part of the cover (**B-Fig.1**).
3. Secure the entire cover using the 8 screws (**C-Fig.1/2**) on the lower part of the cover.

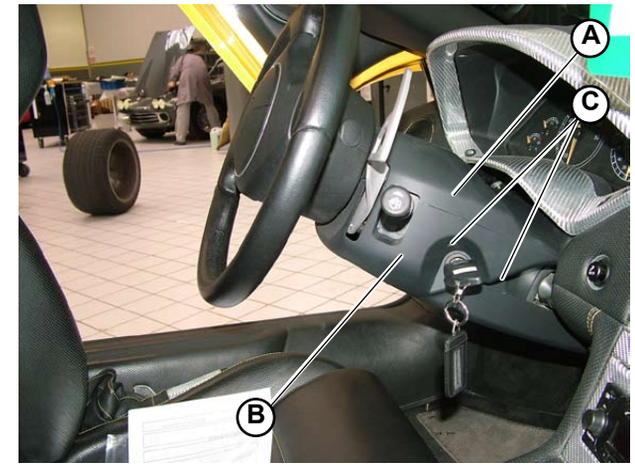

Fig.1

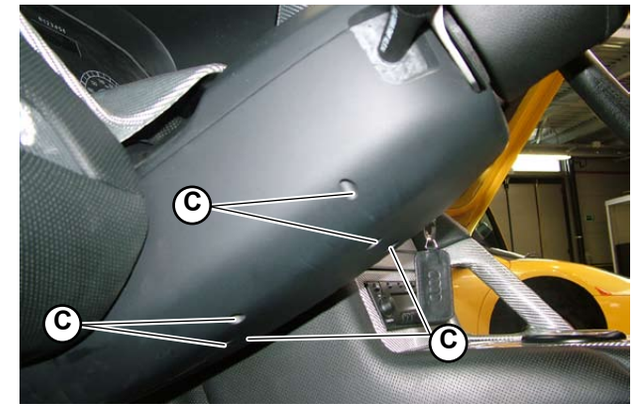

Fig.2

® Automobili Lamborghini S.p.A.
The information and procedures published below are strictly confidential and exclusively for the Lamborghini Dealer Network and Authorized Service Points. All copyrights are property of Automobili Lamborghini S.p.A based on copyright law. All of the PDF chapters in the WEB workshop manuals described below are based on information available at the time of publication. The company reserves the right to make updates and modifications. The following are prohibited: reprinting, reproduction, forwarding to unauthorized people and/or third parties, and translation, including partial, without written authorization from Automobili Lamborghini S.p.A.

B) Assembling the steering wheel

1. Position the steering wheel on the steering column so that the steering wheel is correctly aligned.

2. Secure the steering wheel to the steering column using the ring nut with washer (**A-Fig.3**).
   Fixing steering wheel: **tightening torque (000800-15c)**

3. Connect the horn connection (**B-Fig.3**).

4. Connect the steering wheel to the airbag connection (pigtail connection)(**C-Fig.4**).

STOP **After securing the pigtail connection (C-Fig.4) with the center bolt, remember to remove the clamp (B-Fig.3).**

- Assemble the driver airbag module **(088005)**.
- Assemble the steering wheel cover **(Point A)**.

Fig.3

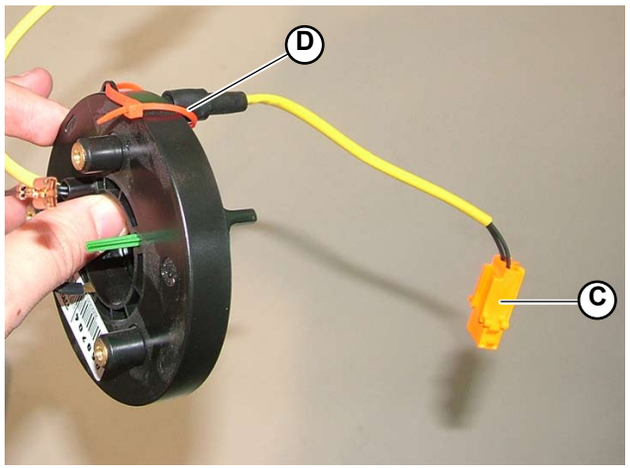

Fig.4

® Automobili Lamborghini S.p.A.
The information and procedures published below are strictly confidential and exclusively for the Lamborghini Dealer Network and Authorized Service Points. All copyrights are property of Automobili Lamborghini S.p.A based on copyright law. All of the PDF chapters in the WEB workshop manuals described below are based on information available at the time of publication. The company reserves the right to make updates and modifications. The following are prohibited: reprinting, reproduction, forwarding to unauthorized people and/or third parties, and translation, including partial, without written authorization from Automobili Lamborghini S.p.A.

Safety

The car is equipped with safety systems which are activated in the case of an accident.

Safety systems (Fig. 1)	
AIRBAG	
A.	Driver front airbag module and pigtail connection
B.	Passenger front airbag module
C.	Airbag diagnostic connector
D.	SDM control unit

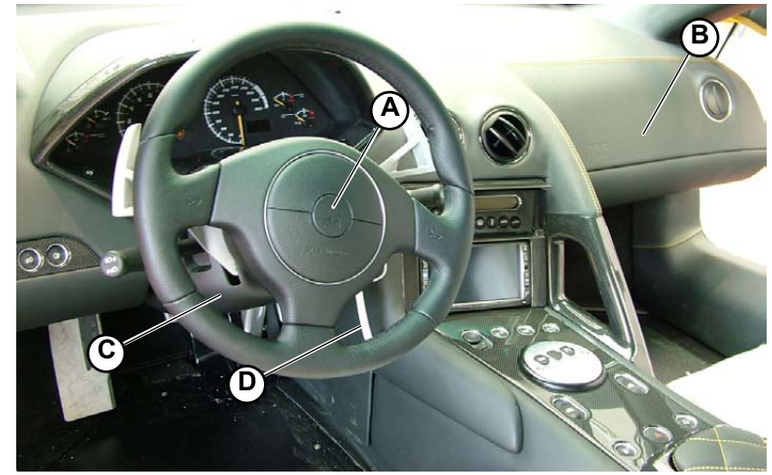

Fig.1

STOP

If an accident occurs, the following parts must always be replaced:
- **Exploded modules;**
- **Pigtail connection if the driver side module exploded;**
- **Control ECU;**
- **Wiring harness control (even in the case of replacement).**

® Automobili Lamborghini S.p.A.
The information and procedures published below are strictly confidential and exclusively for the Lamborghini Dealer Network and Authorized Service Points. All copyrights are property of Automobili Lamborghini S.p.A based on copyright law. All of the PDF chapters in the WEB workshop manuals described below are based on information available at the time of publication. The company reserves the right to make updates and modifications. The following are prohibited: reprinting, reproduction, forwarding to unauthorized people and/or third parties, and translation, including partial, without written authorization from Automobili Lamborghini S.p.A.

Airbag

The airbag is a safety device consisting of a bag that automatically inflates in a frontal collision, placing itself between the driver or passenger's body and the structure of the vehicle.
This is a "passive safety system" since it comes into action once a certain deceleration value is exceeded (which can only result from impacting into an obstacle) without the occupant acting in any way.

The deployment conditions of the airbag are governed by an electronic control unit (SDM) which continuously processes vehicle deceleration. An electric pulse is sent when a predefined threshold is exceeded. This heats an electrical resistance housed in the gas generator which ignites. This causes a chemical firing reaction which in turn fires the pyrotechnic charge.
The pyrotechnic charge reaction generates inert gas which is filtered and cooled by metal filters and is then let out from the holes on the gas generator casing, causing the bag to inflate. The bag places itself between the front internal structure of the vehicle and the occupant's head (driver or passenger).
The inflated bag is a soft barrier that slows down the occupant's head during the collision. The bag is deflated by the gas which is let out from a hole in the back of the bag by the action of the occupant moving forwards. The system deployment times are in the order of thousandths of a second to anticipate the forward movement of the body during the deceleration caused by the impact.
The pyrotechnic charge is contained in a sealed container in the gas generator. Its only purpose is to inflate the bag. In no case can the device transmit a form of energy which can fire any other gas generators stored in the immediate proximity.

STOP **Please note that the gas generator is the only airbag system component containing a pyrotechnic charge.**

The SDM is the control unit governing all the airbag system functions. The SDM is the only control unit in the system. It contains both the accelerometer and the error memory.
If the airbag warning light on the dashboard turns on during normal vehicle operation, it indicates the airbag system malfunction. The malfunction will be stored in the SDM control unit as soon as the dashboard warning light turns on.
The airbag warning light indicates a failure without specifying its nature. Run the SDM control unit diagnostic procedure (**PC Diag. System**) to verify the cause of the error.
For this purpose, a computer is connected to the SDM control unit via the RS232 serial interface. The interface is firstly connected to the OBD II connector which has a direct communication line to the SDM and then to the computer.
Restore the system after discovering the cause of the failure. The troubleshooting tables can be used for this purpose.

® Automobili Lamborghini S.p.A.
The information and procedures published below are strictly confidential and exclusively for the Lamborghini Dealer Network and Authorized Service Points. All copyrights are property of Automobili Lamborghini S.p.A based on copyright law. All of the PDF chapters in the WEB workshop manuals described below are based on information available at the time of publication. The company reserves the right to make updates and modifications. The following are prohibited: reprinting, reproduction, forwarding to unauthorized people and/or third parties, and translation, including partial, without written authorization from Automobili Lamborghini S.p.A.

The driver airbag module consists in: a gas generator fitted with a bag folded into a container which is riveted to a metal plate. The metal plate connects all the components together to form a module installed on the centre of the steering wheel.
The bag is made of silicon-coated nylon. Its internal volume when fully deployed is approximately 60 litres. The bag is folded in a special way. The plastic container has a pre-cut breaking line (film hinge) in horizontal position in the middle. This allows the container to break and the bag to be let out when deployed.

Driver airbag (Fig. 2)	
A.	Driver airbag module
B.	Steering column mount
C.	Steering wheel
D.	Driver airbag module mounts
E.	Pigtail Connection

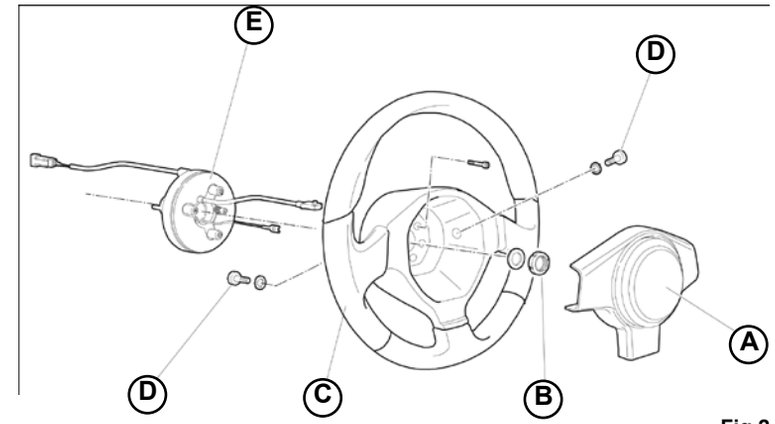

Fig.2

The gas generator on driver's side is pyrotechnic and cylindrical.
The gas generator consists of the following parts:

- a container consisting of two welded half-casings, one of which is perforated to let out the gas. The following components are arranged inside the container:
- propellant contained in a sealed metal cylinder: when heated, this substance releases a considerable amount of gas and a restricted amount of solid particulate;
- an electric resistance or trigger which transforms the control unit electric pulse into a spark;
- a primer heats the propellant: it is activated by the spark generated by the electrical resistance;
- a metal mesh filter is used to uniform pressure, withhold solid particulate and cool the gas which fills the bag

STOP **Do not subject the module to temperatures exceeding 107°C or lower than -35°C to prevent permanent damage to the components with consequent system malfunctioning.**

It transmits an electrical signal from the electric cables on the control unit to the driver AIRBAG module, guaranteeing electric continuity while the steering wheel is used normally. Therefore, it is located inside the steering column switch unit.

® Automobili Lamborghini S.p.A.
The information and procedures published below are strictly confidential and exclusively for the Lamborghini Dealer Network and Authorized Service Points. All copyrights are property of Automobili Lamborghini S.p.A based on copyright law. All of the PDF chapters in the WEB workshop manuals described below are based on information available at the time of publication. The company reserves the right to make updates and modifications. The following are prohibited: reprinting, reproduction, forwarding to unauthorized people and/or third parties, and translation, including partial, without written authorization from Automobili Lamborghini S.p.A.

CAUTION!

- Any inspection, removal, installation or repair work must be carried out by qualified technicians.
- Do not carry out tests using light signallers, voltmeters or ohmmeters.
- Remove the electrostatic charge before the technician removes or touches the airbag unit. Electrostatic charges occur when particular metal elements are touched, such as a water pipe, heating pipe or a metal structure.
- Only inspect the airbags if they are installed on the vehicle. Use the specially designed diagnostics system (Pc Diag).
- Always disconnect the electricity power supply when working on an airbag.
- Follow the battery disconnection instructions provided.
- Disconnect the battery disconnect in the engine compartment.
- After disconnecting the battery, wait for at least 2-3 minutes to give the condensers enough time to discharge.
- Ensure no one is inside the vehicle when the battery is re-connected.
- Follow the instructions provided after connecting the battery.
- The airbag modules must be installed as soon as they are unpacked.
- If the work session is stopped, it is advisable to replace the unit containing the airbag module in its packaging.
- Never leave the airbag module unattended.
- Following removal, keep the padded side of the airbag module facing upwards.
- Never open or repair any airbag components. Always use new components.
- Never use airbag modules that have been subjected to damage or that have fallen on hard surfaces.
- Mark any unopened airbag modules and send to the manufacturer to ensure they are destroyed (send using the new airbag module package).
- Do not use grease, detergent or similar products on airbag modules.
- Always replace the module if the fabric is contaminated with oil, grease, paint, solvents or similar products.

® Automobili Lamborghini S.p.A.
The information and procedures published below are strictly confidential and exclusively for the Lamborghini Dealer Network and Authorized Service Points. All copyrights are property of Automobili Lamborghini S.p.A based on copyright law. All of the PDF chapters in the WEB workshop manuals described below are based on information available at the time of publication. The company reserves the right to make updates and modifications. The following are prohibited: reprinting, reproduction, forwarding to unauthorized people and/or third parties, and translation, including partial, without written authorization from Automobili Lamborghini S.p.A.

Airbag module replacement

STOP **Whenever carrying out any type of work on the airbag system, always disconnect the battery by acting on the switch in the engine compartment. Wait for approx. 2-3 minutes. It is now possible to work inside the car with the due precaution.**

When replacing airbag modules, always follow the procedure illustrated below:

1. Remove the old airbag module and position with the padded side facing upwards.
2. Remove the new airbag module from its packaging and position with the padded side facing upwards.
3. Immediately place the old airbag module in the package.
4. Install the new airbag module on the vehicle.

CAUTION!

- **The airbag system modules must be changed at least 14 years after the vehicle date of manufacture. This expiry term must absolutely be complied with to ensure the airbag system remains operational.**
- **Mark any unopened airbag modules and send to the manufacturer to ensure they are destroyed (send using the new airbag module package).**
- **Do not use grease, detergent or similar products on airbag modules.**
- **Never expose airbag modules to temperatures above 212°F (100°C), not even for short periods of time.**
- **Always replace the module if the fabric is contaminated with oil, grease, paint, solvents or similar products.**

® Automobili Lamborghini S.p.A.
The information and procedures published below are strictly confidential and exclusively for the Lamborghini Dealer Network and Authorized Service Points. All copyrights are property of Automobili Lamborghini S.p.A based on copyright law. All of the PDF chapters in the WEB workshop manuals described below are based on information available at the time of publication. The company reserves the right to make updates and modifications. The following are prohibited: reprinting, reproduction, forwarding to unauthorized people and/or third parties, and translation, including partial, without written authorization from Automobili Lamborghini S.p.A.

Airbag module replacement after an accident

The metal components of a recently deployed airbag are very hot. Do not touch these components for at least twenty minutes after the airbag deployment.
Disconnect the battery disconnect in the engine compartment. Wait for approx. 2-3 minutes. It is now possible to work inside the car with the due precaution.

Conditions:
- Special equipment, diagnosis instrument and other elements required **(000200)** (ABS/AIRBAG interface cable)
- PC DIAG vehicle diagnosis and control.

The airbag control module may be used once only. Following an accident, it must be replaced.

The airbag control module must be replaced:
- After deployment of the driver/passenger airbag (always replace every deployed airbag module).
- If the housing is damaged.

If the driver/passenger airbag is deployed, the following rules apply:
- Replace the airbag module.
- Replace the pigtail connection (driver side).
- Re-upholster the dashboard (passenger side).
- Inspect the wiring harness, replace if damaged.
- Check the condition of the seatbelts; replace if necessary.
- Replace the airbag control unit.
- If necessary, replace any damaged components (visual inspection).
- Remove the steering wheel and position on a level surface (ensure the edge is correctly supported). Every section must rest perfectly on the level surface. If this is not the case, replace the steering wheel.
- Ensure the steering wheel does not feature any traces of explosive material (dust) If there is any dust on the steering wheel, it needs to be replaced.

In the case of an accident where the airbag is not deployed:
- There is no need to replace the airbag components if the malfunction pilot lamp (MIL) K75 does not signal any faults. Inspect the seatbelts separately and check for any error codes in the control unit.

® Automobili Lamborghini S.p.A.
The information and procedures published below are strictly confidential and exclusively for the Lamborghini Dealer Network and Authorized Service Points. All copyrights are property of Automobili Lamborghini S.p.A based on copyright law. All of the PDF chapters in the WEB workshop manuals described below are based on information available at the time of publication. The company reserves the right to make updates and modifications. The following are prohibited: reprinting, reproduction, forwarding to unauthorized people and/or third parties, and translation, including partial, without written authorization from Automobili Lamborghini S.p.A.

Storing and handling airbag modules.

Airbag modules are classed as PT 1 explosive elements. They must be stored and handled in compliance with the safety regulations governing explosive materials.

® Automobili Lamborghini S.p.A.
The information and procedures published below are strictly confidential and exclusively for the Lamborghini Dealer Network and Authorized Service Points. All copyrights are property of Automobili Lamborghini S.p.A based on copyright law. All of the PDF chapters in the WEB workshop manuals described below are based on information available at the time of publication. The company reserves the right to make updates and modifications. The following are prohibited: reprinting, reproduction, forwarding to unauthorized people and/or third parties, and translation, including partial, without written authorization from Automobili Lamborghini S.p.A.

Disposal of airbag modules

Explosive safety devices deployed during an accident may be disposed of with industrial waste. Dispose of airbag modules in compliance with the standards in effect in the country where the disposal procedure is carried out.

Airbag modules may not be scrapped unless they have been deployed.
Airbag modules that have never been deployed must not be scrapped with the vehicle. They must be removed beforehand and sent to specialized firms for disposal.
The device should be considered potentially operative after an accident in which the airbag has not deployed. Handle with care.

First aid

The surface of a deployed airbag and the vehicle interior may be covered with dusty residue. The dust contains by-products of the reaction that generated the gas.
The gas generating material essentially consists of: 5-Aminotetrazole, strontium nitrate and potassium nitrate.
The gas generated by the reaction consists of nitrogen, water and carbon dioxide.
The dust may irritate the skin and the eyes. For this reason, protective clothing, including gloves and goggles, should be worn when removing deployed airbag modules.
Wash with mild soap and water in the event of exposure to the dust. Call a doctor.

The following first aid treatments should be applied after the exposure to the gas-generating product:

- SWALLOWING: induce vomit if the patient is conscious.
- CONTACT WITH SKIN: wash immediately with soap and water. Wash contaminated clothes before wearing them again.
- CONTACT WITH EYES: Rinse immediately under running water for at least 15 minutes. Remove contact lenses to ensure complete rinsing.
- INHALATION: Take the person who breathed in the gas into the open air. Deal with irritations according to the symptoms.

Always call a doctor after any type of exposure to the gas product.

® Automobili Lamborghini S.p.A.
The information and procedures published below are strictly confidential and exclusively for the Lamborghini Dealer Network and Authorized Service Points. All copyrights are property of Automobili Lamborghini S.p.A based on copyright law. All of the PDF chapters in the WEB workshop manuals described below are based on information available at the time of publication. The company reserves the right to make updates and modifications. The following are prohibited: reprinting, reproduction, forwarding to unauthorized people and/or third parties, and translation, including partial, without written authorization from Automobili Lamborghini S.p.A.

The following instructions are given to ensure the correct sequence for the airbag installation on the vehicle.
The assembly and disassembly operations must always be carried out by skilled, expert personnel authorized by Lamborghini.
Following an accident involving the control unit mount, make sure that the correct dimensional and structural conditions of the mount are restored.
The sensors arranged inside the control unit were calibrated by means of crash tests. Do not change the structural stiffness of the chassis, the bumpers or any other structural component since this could vary the airbag deployment conditions.
While working on the vehicle, take care not to subject the airbag modules and/or control unit to knocks or heat; such as. during welding, brazing, percussion, drilling or mechanical machining.
Disconnect the electronic control unit or the battery terminals and wait for at least one minute if you need to carry out jobs on the vehicle involving considerable current variations (e.g. welding).
Never carry out work on the airbag system parts (e.g. module and/or control unit). Send any faulty airbag components to the manufacturer.
Always carry out this operation in a clean and tidy working area. Always make sure that no object or foreign material has got or can get inside or near the module.

Component replacement - traceability

The airbag system, SDM control unit, passenger's module and driver's module components have a label which is split into two parts and a code.
Before replacing these components:

- Remove the detachable part of the label from the new part.
- Apply the label in the space on the form provided with the component.
- Fill in the form providing the required information.
- Send the form to Automobili Lamborghini.
- The form will be attached to the vehicle form by Automobili Lamborghini.

STOP **Be careful not to stick the detachable part of the label on the part to be installed.**

® Automobili Lamborghini S.p.A.
The information and procedures published below are strictly confidential and exclusively for the Lamborghini Dealer Network and Authorized Service Points. All copyrights are property of Automobili Lamborghini S.p.A based on copyright law. All of the PDF chapters in the WEB workshop manuals described below are based on information available at the time of publication. The company reserves the right to make updates and modifications. The following are prohibited: reprinting, reproduction, forwarding to unauthorized people and/or third parties, and translation, including partial, without written authorization from Automobili Lamborghini S.p.A.

This section explains how to disassemble:

A) Passenger airbag module
B) Seatbelt retractors
C) Seatbelt buckle
D) Driver airbag module

® Automobili Lamborghini S.p.A.
The information and procedures published below are strictly confidential and exclusively for the Lamborghini Dealer Network and Authorized Service Points. All copyrights are property of Automobili Lamborghini S.p.A based on copyright law. All of the PDF chapters in the WEB workshop manuals described below are based on information available at the time of publication. The company reserves the right to make updates and modifications. The following are prohibited: reprinting, reproduction, forwarding to unauthorized people and/or third parties, and translation, including partial, without written authorization from Automobili Lamborghini S.p.A.

A) Disassembling the passenger airbag module

Preliminary operations:

- Disconnect the battery disconnect inside the engine compartment and wait 2-3 minutes before carrying out any operation.
- Remove the dashboard **(086803)**.

Module disassemble:

1. Unscrew the four module fastening screws (**A-Fig.1**).

2. Disconnect the connectors (**B-Fig.2**) from the airbag module.

Fig.1

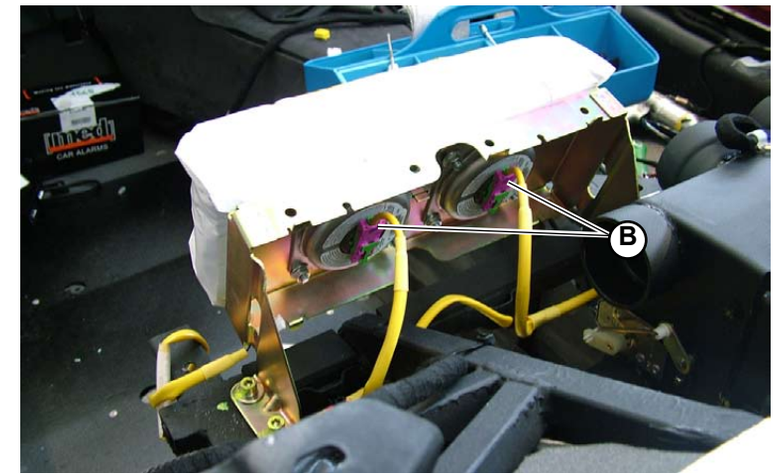

Fig.2

CAUTION

Keep yourself by the side of the module during these operations and wear scale-proof gloves.

Each module has got an identification label designed to associate the module with the vehicle it's fitted on.
Do NOT install the module on another vehicle.

® Automobili Lamborghini S.p.A.
The information and procedures published below are strictly confidential and exclusively for the Lamborghini Dealer Network and Authorized Service Points. All copyrights are property of Automobili Lamborghini S.p.A based on copyright law. All of the PDF chapters in the WEB workshop manuals described below are based on information available at the time of publication. The company reserves the right to make updates and modifications. The following are prohibited: reprinting, reproduction, forwarding to unauthorized people and/or third parties, and translation, including partial, without written authorization from Automobili Lamborghini S.p.A.

B) Disassembling the seatbelt retractors

Preliminary operations:

- Disassemble the seatbelt retractor cover **(086303)**.
- Disassemble the central armrest **(086303)**.

Disassembling the seatbelt retractors:

1. Unscrew the 4 screws (**A-Fig.3**) on the plate (**B-Fig.3**).
2. Disassemble the 2 seatbelt retractors (**C-Fig.3**) by releasing from the screws (**D-Fig.4**).
3. Release the belts (**E-Fig.3**) from the guide (**F-Fig.3**) by unscrewing the 2 screws (**G-Fig.4**) securing the clamp (**H-Fig.4**).
4. Remove the plastic cap (**L-Fig.5**) and unscrew the screw (**M-Fig.5**) securing the belt end (**N-Fig.5**) to the tunnel.

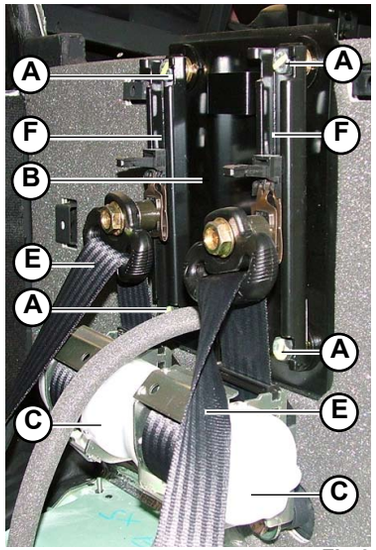

Fig.3

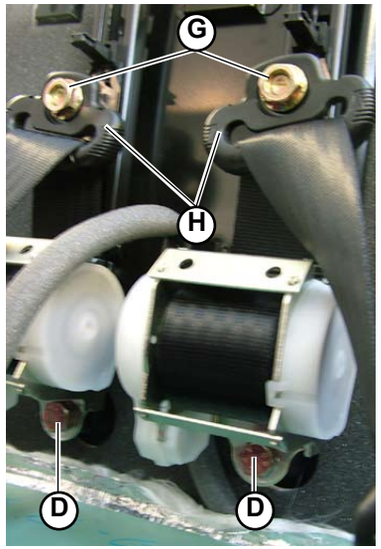

Fig.4

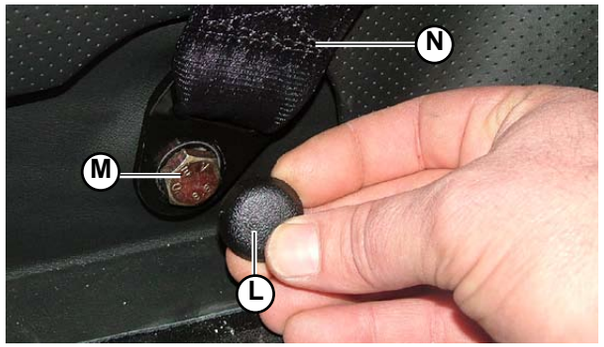

Fig.5

® Automobili Lamborghini S.p.A.
The information and procedures published below are strictly confidential and exclusively for the Lamborghini Dealer Network and Authorized Service Points. All copyrights are property of Automobili Lamborghini S.p.A based on copyright law. All of the PDF chapters in the WEB workshop manuals described below are based on information available at the time of publication. The company reserves the right to make updates and modifications. The following are prohibited: reprinting, reproduction, forwarding to unauthorized people and/or third parties, and translation, including partial, without written authorization from Automobili Lamborghini S.p.A.

C) Disassembling the seatbelt buckle

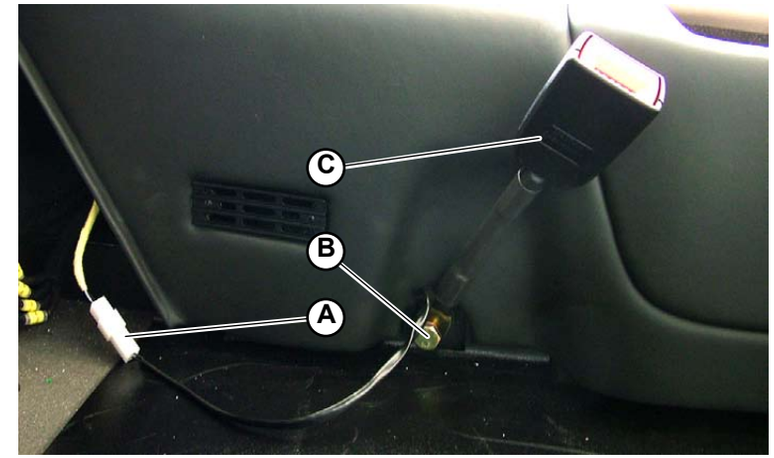

Fig.6

Driver side

Preliminary operations:

- Disassemble the seat rear cover (lower) **(086803)**.
- Disassemble the hand brake cover and boot **(086803)**.
- Disassemble the hand brake **(060203)**.
- Disassemble the side member **(086803)**.

Disassembling the seatbelt buckle:

1. Disconnect the connection (**A-Fig.6**).
2. Unscrew the screw (**B-Fig.6**) securing the buckle (**C.Fig.6**) to the car.

Passenger side

Disassembling the seatbelt buckle:

1. Disconnect the connection (**A-Fig.6**).
2. Unscrew the screw (**B-Fig.6**) securing the buckle (**C.Fig.6**) to the car.

® Automobili Lamborghini S.p.A.
The information and procedures published below are strictly confidential and exclusively for the Lamborghini Dealer Network and Authorized Service Points. All copyrights are property of Automobili Lamborghini S.p.A based on copyright law. All of the PDF chapters in the WEB workshop manuals described below are based on information available at the time of publication. The company reserves the right to make updates and modifications. The following are prohibited: reprinting, reproduction, forwarding to unauthorized people and/or third parties, and translation, including partial, without written authorization from Automobili Lamborghini S.p.A.

D) Disassembling the driver airbag module

1. Detach the 2 rubber seals (**A-Fig.7**) covering the fixing screws on the driver airbag module.
2. Unscrew the 2 screws (**B-Fig.8**) securing the driver airbag module to the steering wheel.
3. Disconnect the driver airbag module connection (pigtail connection)(**C-Fig.9**).

STOP **After disassembling the pigtail connection (C-Fig.9), check that it has been secured with a clamp to prevent it from rotating on itself and being damaged.**

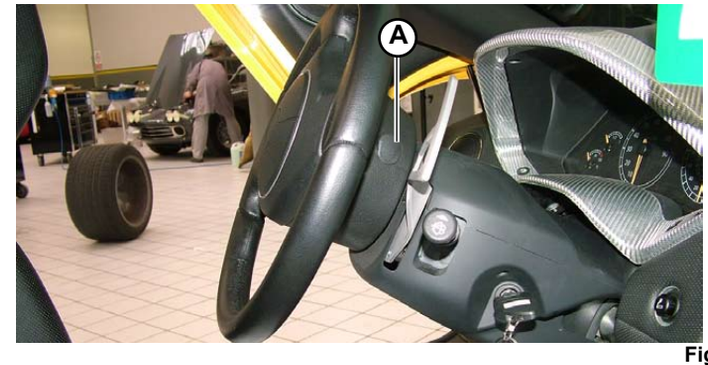

Fig.7

Fig.8

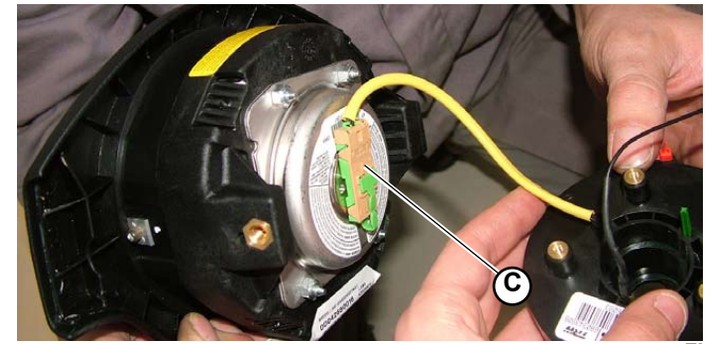

Fig.9

® Automobili Lamborghini S.p.A.
The information and procedures published below are strictly confidential and exclusively for the Lamborghini Dealer Network and Authorized Service Points. All copyrights are property of Automobili Lamborghini S.p.A based on copyright law. All of the PDF chapters in the WEB workshop manuals described below are based on information available at the time of publication. The company reserves the right to make updates and modifications. The following are prohibited: reprinting, reproduction, forwarding to unauthorized people and/or third parties, and translation, including partial, without written authorization from Automobili Lamborghini S.p.A.

This section explains how to assemble:

A) Passenger airbag module
B) Seatbelt retractors
C) Seatbelt buckle
D) Driver airbag module

® Automobili Lamborghini S.p.A.
The information and procedures published below are strictly confidential and exclusively for the Lamborghini Dealer Network and Authorized Service Points. All copyrights are property of Automobili Lamborghini S.p.A based on copyright law. All of the PDF chapters in the WEB workshop manuals described below are based on information available at the time of publication. The company reserves the right to make updates and modifications. The following are prohibited: reprinting, reproduction, forwarding to unauthorized people and/or third parties, and translation, including partial, without written authorization from Automobili Lamborghini S.p.A.

A) Assembling the passenger airbag module

CAUTION

Always follow the methods for packaging, installing, shipping and storing airbag modules set forth by the law in force.
During the installation procedure the working area should be clean and tidy. Always make sure that no object or foreign material has got or can get inside or near the module.
Scrupulously follow the safety instructions during the installation of an airbag system. Wear protective goggles and heat resistant gloves.
Always arrange the modules with the plastic cover facing upwards while handling.
Always turn the part with the plastic cover or bag (passenger's side module) away from your body while handing a module.

STOP

Each airbag system can EXCLUSIVELY be used on the vehicle for which it was designed and calibrated. Consequently, always scrupulously check that the airbag module you are installing is the correct one for the vehicle.
In general, any attempt to install an airbag system on a vehicle configured differently from the vehicle for which the module was designed can cause improper system deployment with severe possible effects on the occupants.

® Automobili Lamborghini S.p.A.
The information and procedures published below are strictly confidential and exclusively for the Lamborghini Dealer Network and Authorized Service Points. All copyrights are property of Automobili Lamborghini S.p.A based on copyright law. All of the PDF chapters in the WEB workshop manuals described below are based on information available at the time of publication. The company reserves the right to make updates and modifications. The following are prohibited: reprinting, reproduction, forwarding to unauthorized people and/or third parties, and translation, including partial, without written authorization from Automobili Lamborghini S.p.A.

1. Tighten the four fixing screws (**A-Fig.1**) on the module.
   Fixing screws: tightening torque (000800-17a).
2. Connect the two connectors (**B-Fig.2**) to the airbag module.

CAUTION

During assembly, keep to the side of the module and wear protective gloves.

- Re-assemble the dashboard **(086805)**.
- Re-connect the battery disconnect in the engine compartment.

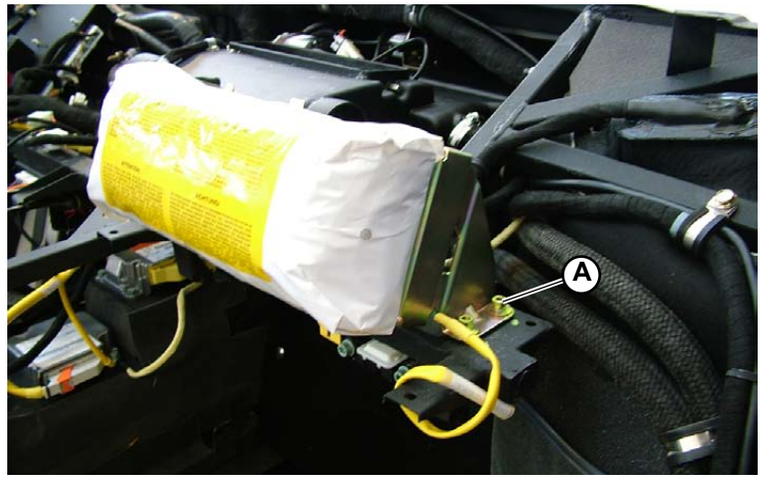

Fig.1

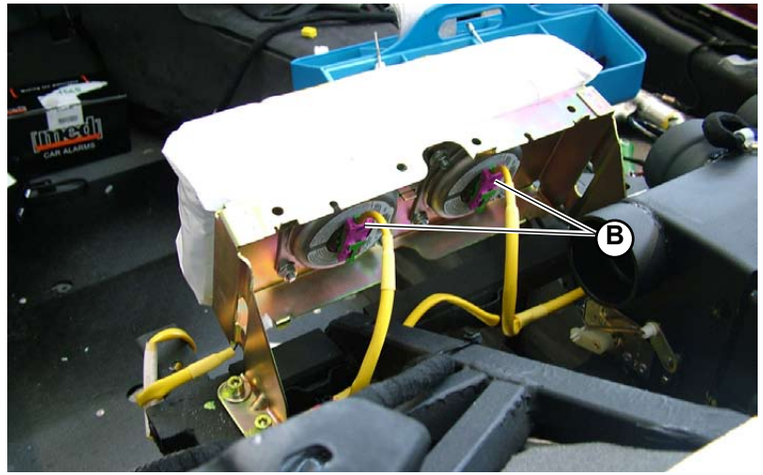

Fig.2

® Automobili Lamborghini S.p.A.
The information and procedures published below are strictly confidential and exclusively for the Lamborghini Dealer Network and Authorized Service Points. All copyrights are property of Automobili Lamborghini S.p.A based on copyright law. All of the PDF chapters in the WEB workshop manuals described below are based on information available at the time of publication. The company reserves the right to make updates and modifications. The following are prohibited: reprinting, reproduction, forwarding to unauthorized people and/or third parties, and translation, including partial, without written authorization from Automobili Lamborghini S.p.A.

B) Assembling the seatbelt retractors

1. Tighten the fixing screw (**A-Fig.3**) at the end of the seatbelt (**B-Fig.3**) and cover the screw with the plastic cap (**C-Fig.3**).
2. Secure the seatbelt (**D-Fig.4**) to the guide (**E-Fig.4**) using the 2 screws (**F-Fig.5**) fixing the clamp (**G-Fig.5**).
   Fixing screws: tightening torque (000800-18b).

3. Assemble the 2 retractors (**H-Fig.4**) and secure using the screws (**L-Fig.5**).
   Fixing screws: tightening torque (000800-18a).

4. Fix the plate (**M-Fig.4**) using the 4 screws (**N-Fig.4**) on the guides.

When assembling the plate with the guides, place spacers between the guides and the plate:
- **2 spacers (P-Fig. 6) for each of the upper screws**
- **1 spacer (Q-Fig. 6) for each of the lower screws**

- Assemble the central armrest **(086305)**.
- Assemble the seatbelt retractor cover **(086305)**.

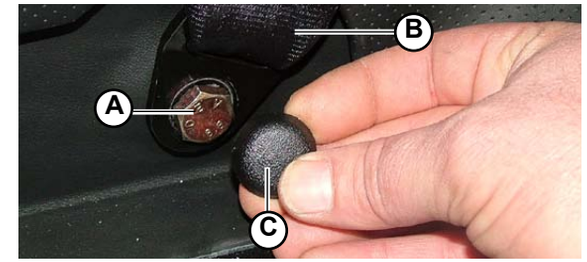

Fig.3

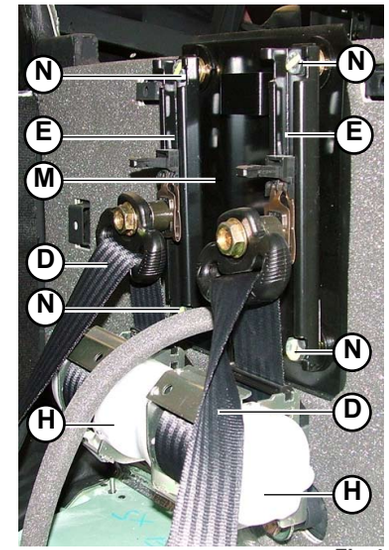

Fig.4

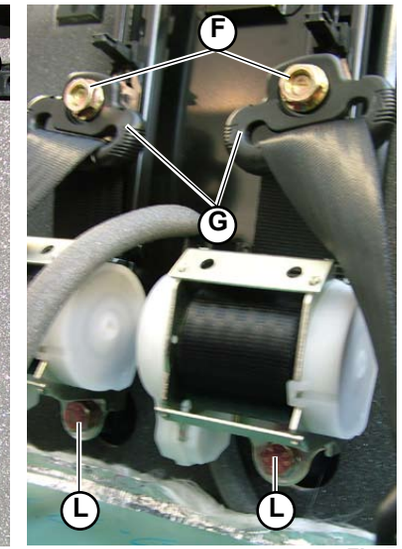

Fig.5

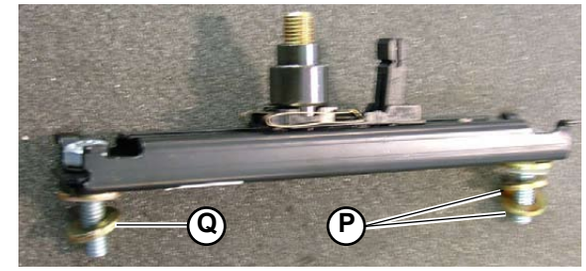

Fig.6

® Automobili Lamborghini S.p.A.
The information and procedures published below are strictly confidential and exclusively for the Lamborghini Dealer Network and Authorized Service Points. All copyrights are property of Automobili Lamborghini S.p.A based on copyright law. All of the PDF chapters in the WEB workshop manuals described below are based on information available at the time of publication. The company reserves the right to make updates and modifications. The following are prohibited: reprinting, reproduction, forwarding to unauthorized people and/or third parties, and translation, including partial, without written authorization from Automobili Lamborghini S.p.A.

C) Assembling the seatbelt buckle

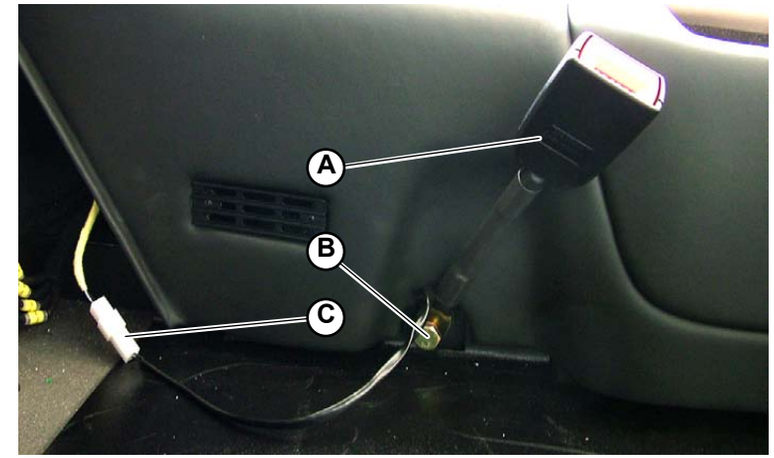

Fig.7

Driver side

1. Secure the seatbelt buckle (**A-Fig.7**) to the car using the screw (**B-Fig.7**).
   Fixing screws: tightening torque (000800-18a).
2. Connect the connection (**C-Fig.7**).

- Assemble the side member **(086805)**.
- Assemble the hand brake **(060205)**.
- Assemble the hand brake cover and boot **(086805)**.
- Assemble the seat rear cover (lower) **(086805)**.

Passenger side

1. Secure the seatbelt buckle (**A-Fig.7**) to the car using the screw (**B-Fig.7**).
   Fixing screws: tightening torque (000800-18a).
2. Connect the connection (**C-Fig.7**).

® Automobili Lamborghini S.p.A.
The information and procedures published below are strictly confidential and exclusively for the Lamborghini Dealer Network and Authorized Service Points. All copyrights are property of Automobili Lamborghini S.p.A based on copyright law. All of the PDF chapters in the WEB workshop manuals described below are based on information available at the time of publication. The company reserves the right to make updates and modifications. The following are prohibited: reprinting, reproduction, forwarding to unauthorized people and/or third parties, and translation, including partial, without written authorization from Automobili Lamborghini S.p.A.

D) Assembling the driver airbag module

1. Connect the driver airbag module connection (pigtail connection) (**A-Fig.8**).

STOP **After securing the pigtail connection (A-Fig.8) with the center bolt, remember to remove the clamp.**

2. Secure the driver airbag module to the steering wheel using the 2 screws (**B-Fig.9**).
   Fixing screws: tightening torque (000800-15b).

3. Cover the 2 screws with the two rubber seals (**C-Fig.10**).

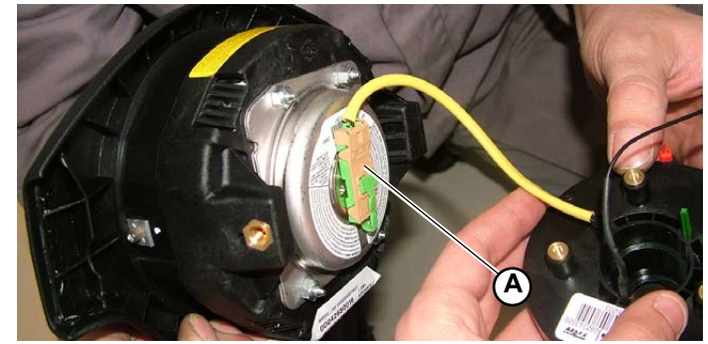

Fig.8

Fig.9

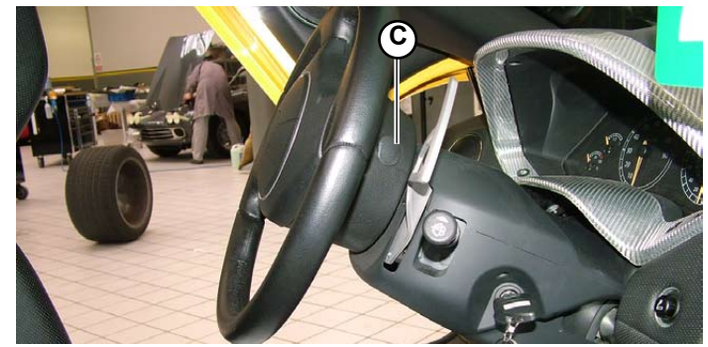

Fig.10

® Automobili Lamborghini S.p.A.
The information and procedures published below are strictly confidential and exclusively for the Lamborghini Dealer Network and Authorized Service Points. All copyrights are property of Automobili Lamborghini S.p.A based on copyright law. All of the PDF chapters in the WEB workshop manuals described below are based on information available at the time of publication. The company reserves the right to make updates and modifications. The following are prohibited: reprinting, reproduction, forwarding to unauthorized people and/or third parties, and translation, including partial, without written authorization from Automobili Lamborghini S.p.A.

This section explains how to disassemble:

A) Disassembling the seats

B) Disassembling the headrests

A) Disassembling the seats

1. Disconnect the seat (**A-Fig.1**) from the bottom of the car by unscrewing the 4 screws (**B-Fig.2**) securing the 2 seat guides (**C-Fig 2**) (2 screws for each guide).

Fig.1

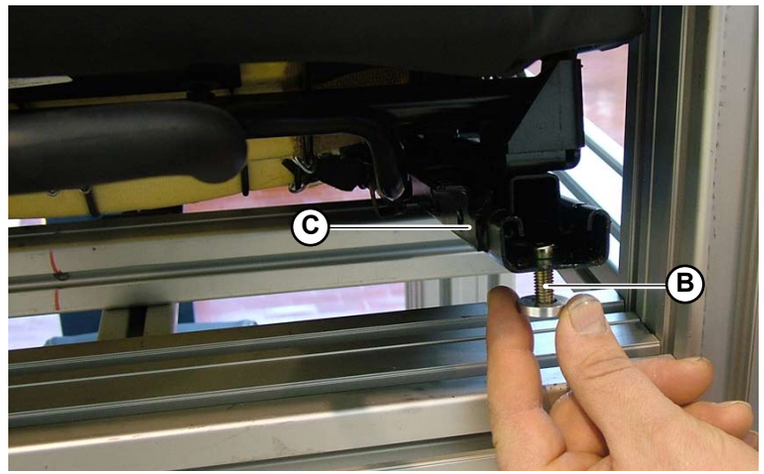

Fig.2

® Automobili Lamborghini S.p.A.
The information and procedures published below are strictly confidential and exclusively for the Lamborghini Dealer Network and Authorized Service Points. All copyrights are property of Automobili Lamborghini S.p.A based on copyright law. All of the PDF chapters in the WEB workshop manuals described below are based on information available at the time of publication. The company reserves the right to make updates and modifications. The following are prohibited: reprinting, reproduction, forwarding to unauthorized people and/or third parties, and translation, including partial, without written authorization from Automobili Lamborghini S.p.A.

B) Disassembling the headrests

All of the operations described below must be carried out the same way for both seats and both headrests.

Preliminary operations

- Remove the car's seats **(Point A).**

Always take the utmost care not to damage the leather upholstery while carrying out the operations described here.

Disassembling the seat's rear panel

1. Unscrew the two screws (**A-Fig.3**) located at the lower part of the panel.
2. Holding the panel against the seat, slide it upward to release the two hooks located inside the panel itself from the seat (**B-Fig.4**).
3. Remove the panel.

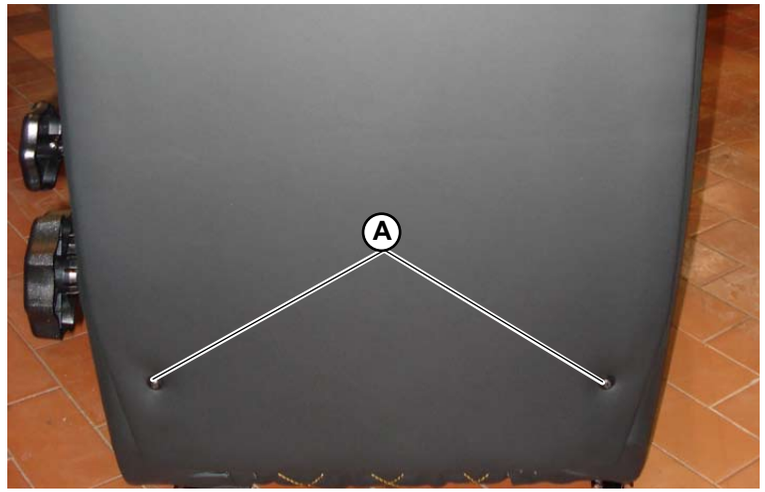

Fig.3

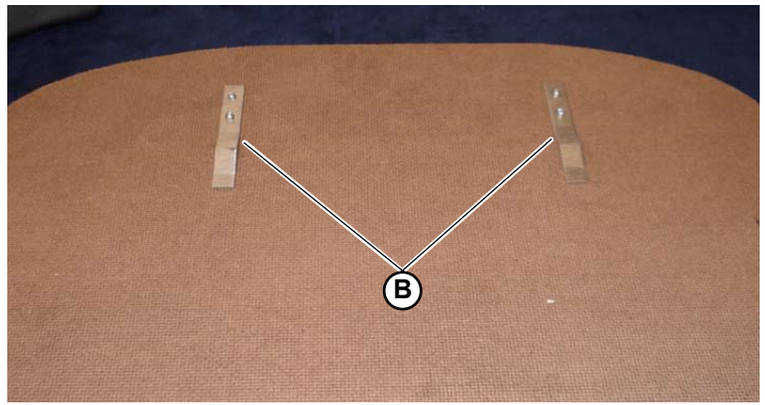

Fig.4

® Automobili Lamborghini S.p.A.
The information and procedures published below are strictly confidential and exclusively for the Lamborghini Dealer Network and Authorized Service Points. All copyrights are property of Automobili Lamborghini S.p.A based on copyright law. All of the PDF chapters in the WEB workshop manuals described below are based on information available at the time of publication. The company reserves the right to make updates and modifications. The following are prohibited: reprinting, reproduction, forwarding to unauthorized people and/or third parties, and translation, including partial, without written authorization from Automobili Lamborghini S.p.A.

Disassembling the headrest

4. Unscrew the 4 bolts, two per side (**C-Fig.5**), securing the headrest to the seat.

5. Remove the headrest, moving toward the front of the car and then upward.

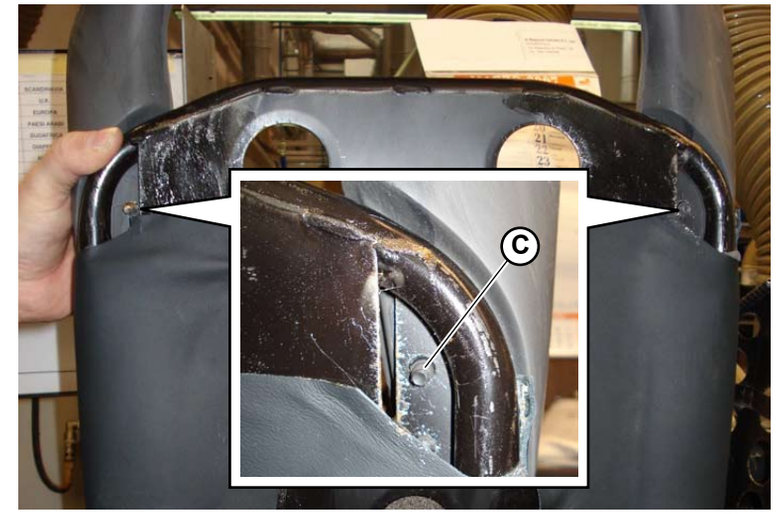

Fig.5

® Automobili Lamborghini S.p.A.
The information and procedures published below are strictly confidential and exclusively for the Lamborghini Dealer Network and Authorized Service Points. All copyrights are property of Automobili Lamborghini S.p.A based on copyright law. All of the PDF chapters in the WEB workshop manuals described below are based on information available at the time of publication. The company reserves the right to make updates and modifications. The following are prohibited: reprinting, reproduction, forwarding to unauthorized people and/or third parties, and translation, including partial, without written authorization from Automobili Lamborghini S.p.A.

This section explains how to assemble:

A) Assembling the seats

B) Assembling the headrests

® Automobili Lamborghini S.p.A.
The information and procedures published below are strictly confidential and exclusively for the Lamborghini Dealer Network and Authorized Service Points. All copyrights are property of Automobili Lamborghini S.p.A based on copyright law. All of the PDF chapters in the WEB workshop manuals described below are based on information available at the time of publication. The company reserves the right to make updates and modifications. The following are prohibited: reprinting, reproduction, forwarding to unauthorized people and/or third parties, and translation, including partial, without written authorization from Automobili Lamborghini S.p.A.

A) Assembling the seats

1. Position the mat (**A-Fig.1**) on the bottom of the car.

2. Position the seat (**B-Fig.2**) on the mat. Place the spacers (**D-Fig.1/3**) between the guides (**C-Fig.3**) and the mat.

3. Secure the seat by fixing the 2 guides using the 4 screws (**E-Fig.1/3**) (2 screws for each guide).
   Screw attachment; **tightening torque (000800-15d).**

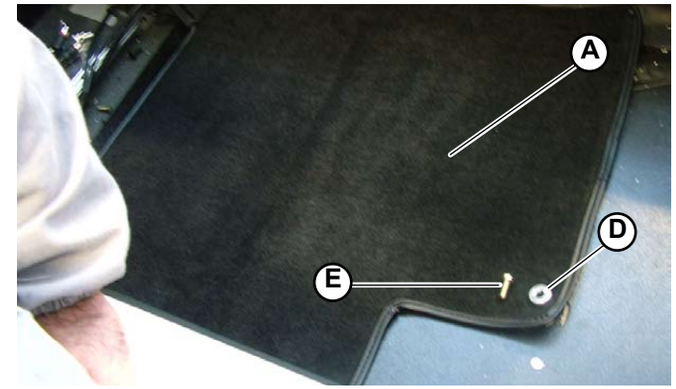

Fig.1

Fig.2

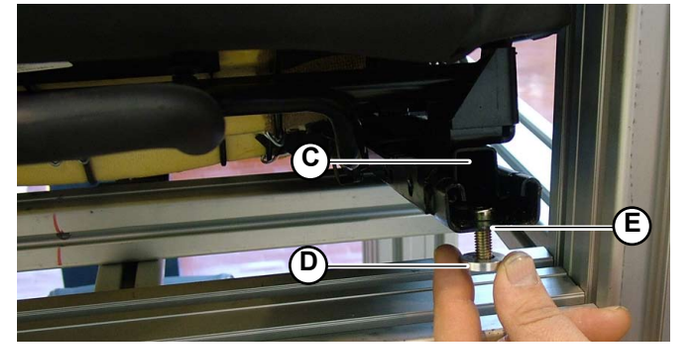

Fig.3

® Automobili Lamborghini S.p.A.
The information and procedures published below are strictly confidential and exclusively for the Lamborghini Dealer Network and Authorized Service Points. All copyrights are property of Automobili Lamborghini S.p.A based on copyright law. All of the PDF chapters in the WEB workshop manuals described below are based on information available at the time of publication. The company reserves the right to make updates and modifications. The following are prohibited: reprinting, reproduction, forwarding to unauthorized people and/or third parties, and translation, including partial, without written authorization from Automobili Lamborghini S.p.A.

B) Assembling the headrests

All of the operations described below must be carried out the same way for both seats and both headrests.

Preliminary operations

- Remove the car's seats **(088203).**

Always take the utmost care not to damage the leather upholstery while carrying out the operations described here.

Assembling the headrests

1. Position the headrest in the upper part of the seat so that the two stud bolts at the end of its arms are inserted into the two holes on the seat's structure (**A-Fig.4**). Make sure that the headrest and the seat are properly aligned and fit perfectly.

2. Tighten the bolts onto the 4 screws (**A-Fig.4**) of the new headrest, securing the latter to the seat.

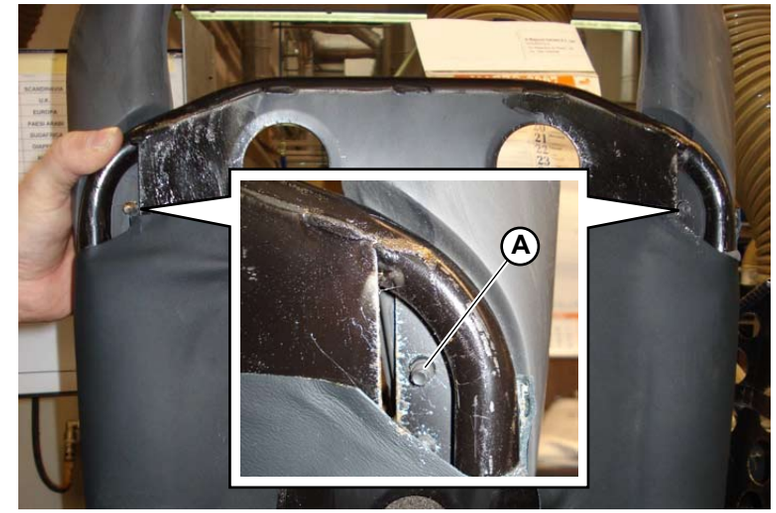

Fig.4

® Automobili Lamborghini S.p.A.
The information and procedures published below are strictly confidential and exclusively for the Lamborghini Dealer Network and Authorized Service Points. All copyrights are property of Automobili Lamborghini S.p.A based on copyright law. All of the PDF chapters in the WEB workshop manuals described below are based on information available at the time of publication. The company reserves the right to make updates and modifications. The following are prohibited: reprinting, reproduction, forwarding to unauthorized people and/or third parties, and translation, including partial, without written authorization from Automobili Lamborghini S.p.A.

Assembling the seat's rear panel

3. Holding the panel against the seat, slide it downward to engage the two hooks located inside the panel itself onto the seat (**B-Fig.5**).

4. Tighten the two screws (**C-Fig.6**) located at the lower part of the panel.

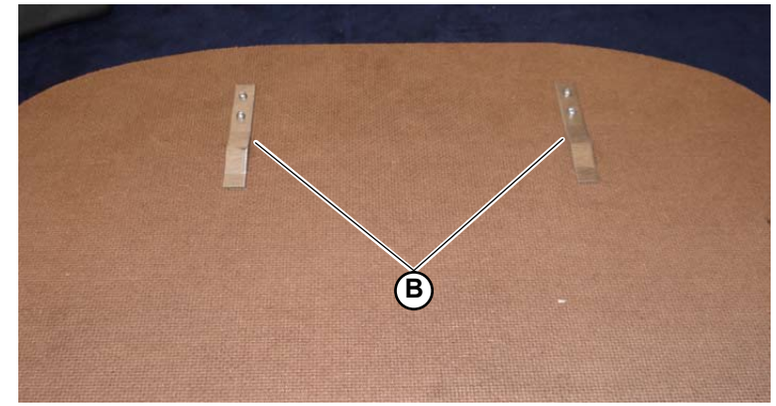

Fig.5

Fig.6

Final operations

- Assemble the car's seats **(Point A).**

® Automobili Lamborghini S.p.A.
The information and procedures published below are strictly confidential and exclusively for the Lamborghini Dealer Network and Authorized Service Points. All copyrights are property of Automobili Lamborghini S.p.A based on copyright law. All of the PDF chapters in the WEB workshop manuals described below are based on information available at the time of publication. The company reserves the right to make updates and modifications. The following are prohibited: reprinting, reproduction, forwarding to unauthorized people and/or third parties, and translation, including partial, without written authorization from Automobili Lamborghini S.p.A.

EXTERNAL PAINT

MY	Paint color	Type	Color code
From MY ‘01	GRIGIO ANTARES	Metallic	0048
From MY ‘01	GRIGIO AVLON	Metallic	0049
From MY ‘01	NERO ALDEBARAN	Pastello	0051
From MY ‘01	NERO PEGASO	Metallic	0052
From MY ‘01	BLU NOVA	Pastello	0064
From MY ‘01	BLU HERA	Metallic	0054
From MY ‘01	GIALLO EVROS	Pastello	0055
From MY ‘01	ARANCIO ISHTAR	Pastello	0057
From MY ‘01	ROSSO ANDROMEDA	Pastello	0059
From MY ‘01	BIANCO ISIS	Pastello	0060
From MY ‘01	AZZURRO AQUARIUS	Metallic	0076
From MY ‘07	VERDE DRACO	Metallic	0089
From MY ‘07	GRIGIO TELESTO	Perlato	0098
From MY ‘01	VERDE ITHACA	3-layer Perlato	0077
From MY ‘01	GIALLO ORION	3-layer Perlato	0056
From MY ‘01	ARANCIO ATLAS	3-layer Perlato	0058
From MY ‘01	VIOLA OPHELIA	Metallic	0061
From MY ‘05	ORO ADONIS	3-layer Perlato	0084
Random samples	BALLON WHITE	3-layer Perlato	224009

® Automobili Lamborghini S.p.A.
The information and procedures published below are strictly confidential and exclusively for the Lamborghini Dealer Network and Authorized Service Points. All copyrights are property of Automobili Lamborghini S.p.A based on copyright law. All of the PDF chapters in the WEB workshop manuals described below are based on information available at the time of publication. The company reserves the right to make updates and modifications. The following are prohibited: reprinting, reproduction, forwarding to unauthorized people and/or third parties, and translation, including partial, without written authorization from Automobili Lamborghini S.p.A.

How to obtain external paint formulas

1. Go to www.ppg.com
2. Click on Industrial.
3. Click on PPG OEM Coating.
4. Click on Automotive Refinish.
5. Select the geographical area on the map.
6. Select Products and Services for Body from the menu.
7. Click on Color Reproduction Systems.
8. Click on Access online color (register by entering your e-mail and filling in the required fields) and accept the conditions.
9. Select Auto Manufacturers and search using the Lamborghini window.
10. Enter the Lamborghini color code (indicated in the attached tables) or the name of the color in the description field.
11. After specifying the color code, click on Search.
12. Click on the color's line.
13. Select the product lines; two painting systems normally appear: one solvent-based (DELTRON) and one water-based (ENVIROBASE).
14. Click on the color's line.
15. If the car requires a multilayer painting cycle, the color formulas for each layer are listed.

Automobili Lamborghini **DEUTSCH**

Actionplan paint shop: alle Lackierer
Subjekt: Quality, Paintig, Finish

only for view

Stand: 24.08.05

Subjekt	Possible mistakes	Measure to prevent	Responsible Area
Delivery Completed Body	Verschmutzte Karossen KTL rauh, verschmutzt, Schleifriefen, Überbeschichtet KTL-läufer und verkrustungen am Rahmen, Korrosion Porosität auf Carbonteilen freigelegtes Carbon (nacharbeit an ecken zb.) EP-primer rauh, ausgebessert, mit fehlstellen Fehlstellen aus dem Untergrund, löcher, dellen Stahlteile mit Beulen, Dellen, Kratzern, Schleifriefen Kratzer auf den Teilen Abdichtung der Karosse Korrekt	Bei Lieferung die Karossen auf Schäden überprüfen, Karosse Abdecken KTL auf Schleifriefen, verschmutzung, einschlüsse, Läufer, Rost, Schichtdicke Prüfen Carbonteile auf freigelegte Stellen, Kratzer, Poren, Dellen, Löcher, nachgebesserte stellen, Spachtelstellen überprüfen Stahlteile auf Schäden, Dellen, Kratzer, Schleifriefen, Kanten Prüfen EP-primer auf gute Oberflähe und Fehlstellen Prüfen Entscheiden, welche Fehlstellen ohne übermäßigen Aufwand Abgearbeitet werden können, Aufzeichnung der Fehlstellen auf einem "Karossenblatt" Lieferanten und Lamborghini über Fehler informieren. Bei groben Fehlern mit Lamborghini entscheiden, wie Fehler beseitigt werden soll.	Prüfung Wahreneingang
Preparation Steelparts Carbonparts	Fehlstellen im und unter KTL nicht beseitigt Porosität an Spachtelstellen sichtbare Schleifriefen auf der Oberfläche Schlechte Lackhaftung an ecken und kanten Porosität aus dem Carbon, mangelnder kontakt zwischen EP-primer und Carbon Kratzer, Lunken, Löcher, Offenes Carbon, Spachtel unter EP-primer, EP-primer rauh mit nachgebeserten stellen, Freigelegte Carbonfasern	Vor Arbeitsbeginn Karosse gründlich Reinigen. Fehler im und auf dem KTL und Fehler im Blech erkennen und komplett beseitigen, wenn Fehler zu groß ist, Lamborghini und Lieferanten Informieren. Fehler in und auf den Carbonteilen erkennen und komplett beseitigen, wenn Fehler zu groß ist, Lamborghini und Lieferanten Informieren. Spachtelstellen so klein wie mögich halten, geringe Spachtel Schichtdicke einhalten Spachtelporen vermeiden, Grobe Schleifspuren gering halten und fein Ausschleifen (zb: P80, P120, P180, P240) Kontrollpulver benutzen (3M). Alle Flächen, ecken und Kanten fein nachschleifen (P240) Alle ecken und Kanten gründlich Anschleifen (3M Schleifpad) Blankes Metall nicht mit den Händen berühren, Metall mit Washprimer grundieren Durchschliffstellen auf Carbon vor PU-primer auftrag mit EP-primer Grundieren Danach nicht mehr auf das Carbon durchschleifen. vor PU-primer / Wash-primer Applikation die Oberfläche sehr gut reinigen, Entfetten und Abtrocknen lassen. Abschließend genau auf Fehler kontrollieren und Fehler beseitigen. Alle Arbeitsschritte Dokumentieren.	Preparation Area, before Primerapplikation
Preparation Primer Applikation	Falscher Primer auf falschem Material Vertauschen von einzel Komponenten der Primer nicht korreckte Anmischung des Materials Anwendungszeitraum überschritten Oberfläche schlecht gereinigt / Staubig Trockentemperatur zu gering / zu hoch Trockenzeit zu kurz / zu lang Schichtdicke zu hoch / zu gering Ablüftzeiten nicht eingehalten	Primermaterial nach dem Untergrund auswählen (Metall / Carbon) zubereitung des Primer-material nach Technischen Merkblättern Topfzeiten und Lagerzeiten nicht überschreiten Schichtdicken beachten, nicht überbeschichten. Ablüftzeiten zwischen den Lackiergängen nicht überschreiten / unterschreiten Trockenzeiten und Trockentemperaturen einhalten Vor Primerauftrag prüfen ob die Oberfläche gereinigt ist Abschließend genau auf Fehler kontrollieren und Fehler beseitigen. Alle Arbeitsschritte Dokumentieren.	Preparation Area, Paint technician
Preparation Primer sanding / grinding	Poren aus dem Untergrund noch sichtbare Schleifriefen vom Untergrund Läufer im Primer / Rauhe stellen Schmutzeinschlüsse	Alle Poren finden und vor dem Schleifen füllen. Zur sichtbarmachung von Fehlstellen und Schleifriefen / Struktur Kontrollpulver (3M) verwenden. Läufer im Material gesondert vor dem eigentlichen Schliff beseitigen. Kein grobes Schleifpapier verwenden (schliff mit P400 / P500) Alle Ecken und Kanten gut anschleifen. Nach demSchleifen Karosse innen und Aussen Staubfrei machen und gründlich Reinigen. Nach Abkleben Karosse nocheinmal einigen. Abschließend genau auf Fehler kontrollieren und Fehler beseitigen. Alle Arbeitsschritte Dokumentieren.	Preparation, before painting

PDF created with FinePrint pdfFactory Pro trial version http://www.softwarelabs.com

Painting Basecoat Clearcoat	Falsche komponenten zur zubereitung der Materialien zu hohe / zu geringe Schichtdicken Läufer, Wolkigkeit, Streifenbildung Schmutzeinschlüsse im BC/CC Ablüftzeiten nicht eingehalten Trockenzeit zu kurz / zu Lang Trockentemperatur zu hoch / zu gering	Vor Lackierbeginn Karosse Staubfrei machen und sehr Gründlich reinigen. Richtige Auswahl der Lack- komponenten nach Tempereratur und Technischen Merkblatt. Schichtdicken nicht überschreiten und nicht unterschreiten. Schmutzeinschlüsse im Basecoat vermeiden, nach möglichkeit vor Klarlackauftrag Fremdkörper aus der Lackschicht beseitigen. Läuferbildung und Wolkigkeit im Basecoat vermeiden. Klarlackapplikation möglichst homogen ohne Läufer, Struktur, Magerstellen. Ablüftzeiten zwischen allen Applikationen einhalten (min/max beachten) Trockentemperaturen und Trockenzeiten einhalten, nicht über / unterschreiten Abschließend genau auf Fehler kontrollieren und Fehler beseitigen. Alle Arbeitsschritte Dokumentieren.	paint technician
Painting Black mat	schlechtes Abkleben des Decklack Schwarzer nebel auf Decklack Ungenaues Abkleben Schwarzer Absetzkanten	Präzises Abkleben der Teile die nicht Schwarz werden Auf gute haftung des Klebeband achten. Möglichst glattflächig Abkleben. Bei Scharfen Farbabgrenzungen auf korrekte Linienführung achten, keine "Ausgefransten Kanten" verursachen. Vor Schwarz Applikation Abdeckung auf dichtheit überprüfen. Nach entfernung der Abdeckung Karosse auf Schwarzen Nebel kontrollieren und Nebel beseitigen. Abschließend genau auf Fehler kontrollieren und Fehler beseitigen. Alle Arbeitsschritte Dokumentieren.	paint technician
Finish fne sanding / grinding polish	Durchschleifen bis zum Basecoat Sichtbare grobe Schleifriefen, Falsches Schleifpapier Löcher im Decklack durch ausgerissene Einschlüsse Grobe reststruktur im Decklack Sichtbare Schleifstellen nach dem Polieren Matte stellen, Porosität vom Untergrund Sichtbare Abklebekanten, Läufer Politurreste an kanten, Polierstaub übersehene Fehlstellen im Decklack zu Grobe Politur, zu hohe Temperatur beim Polieren	zuerst nur die Fehlstellen ausschleifen (Staubeinschlüsse...) Richtiges Schleifmittel auswählen, nicht an kanten Durchschleifen. Lackstruktur gleichmässig Schleifen, keine punktuelle bearbeitung. Richtige Politur in zunehmend Feineren Schritten Anwenden. Löcher im Decklack möglichst komplett mit Klarlack auffüllen und mit verschleifen. Zwischen einzelnen Polierschritten kontrollspray (3M, Isopropanol) zur sichtbarmachung ungenügend Polierter bereiche verwenden. Polieren in meheren schritten, abschliessend Finish mit Hochglanzpolitur. Gründliches reinigen der Karosse von Polierrückständen. Abschließend genau auf Fehler kontrollieren und Fehler beseitigen. Alle Arbeitsschritte Dokumentieren.	finish area
Check before deliver check at Zp 5	nicht ausreichende beleuchtung zu wenig zeit Fehlstellen nicht anzeichnen übermässiges "Betatschen" der Karosse keine Information der betroffenen Fertigungsbereiche über Fehlstellen. offensichtliche Fehlstellen übersehen	Gute beleuchtung sicherstellen, Ausreichend zeit einplanen für eine Karosse. Alle Fehlstellen mit einem Fettstift anzeichnen und alle Fehlstellen Abarbeiten. Den betroffenen Bereich, der die Fehlstellen verursacht, informieren. Alle Fehlstellen Dokumentieren. Alle Fehlstellen nach Abarbeitung nochmals begutachten. Abschließend genau auf Fehler kontrollieren und Fehler beseitigen. Alle Arbeitsschritte Dokumentieren. Karosse mit Dokumentation Versandfertig machen.	Zp5 check technician

Umsetzung der Massnahmen bei ... ab:

only for view

Automobili Lamboghini S.p.A.
Via Modena, 12
I-40019 Sant' Agata Bolognese
lamborghini.com

Date:

Signature:

Lamborghini ...

in order by Lamborghini createt by F. Busia, PPG

PDF created with FinePrint pdfFactory Pro trial version http://www.softwarelabs.com

Automobili Lamborghini **ITALIANO**

Action plan verniciatore:

Soggetto: Qualità, Verniciatura, Finizione

only for view

Stand: 24.08.05

Soggetto	Errori possibili	Misure preventive	Responsabile Area
Consegna Scocca completa	Vetture sporche EDP aggiunte, sporche, segni di carteggiatura, coperte EDP runouts e depositi EDP sul telaio; corrosioni Porosità sulle parti in carbonio Carbonio visibile (angoli carteggiati, ecc.) EP-aggiunte di fondo, riparati, con difetti Difetti del sottostrato, buchi, parti d'acciaio difettose perché urtate, ammaccature, graffi, segi di carteggiatura sulle parti Adeguato sealing della scocca	Controllare le scocche alla consegna per i danni e coprirle Controllare EDP per segni di carteggiatura, sporchi, inclusioni, runouts, punti di ruggine Controllare le parti in carbonio, per graffi, porosità, ammaccature, buchi, riparazioni Controllo di zone di ripristino Controllo parti in acciaio per danni, ammaccature, graffi, segni di carteggiatura, bordi Controllare EP-fondo per buona superficie e senza difettosità Decidere quali difetti possono essere riparati senza sforzi eccessivi Annotare i difetti su una "scheda scocca" Informare i fornitori e Lamborghini sui difetti riscontrati Per grossi danneggiamenti, decidere con Lamborghini come gestire la rimozione della anomalia	Controllo Qualità in accettazione
Preparazione particolari Parti in acciaio Parti in carbonio	Difetti sopra e sotto EDP non riparati Porosità in zone di ripristino Segni di carteggiatura visibili in superficie Adesione di vernice sui bordi e sugli angoli Pororsità del carbonio, Contatto non sufficiente fra EP-fondo ed il carbonio, graffi, cavità, buchi, carbonio aperto, Carteggiando la superficie sotto il EP-fondo, aggiunte di EP-fondo, con zone riparate, carbonio visibile	Prima di cominciare a lavorare, pulire completamente la scocca Rilevare i difetti dentro e sopra l'EDP e nel sottostrato, ripararli completamente Se ci sono grossi danni, informare Lamborghini ed i fornitori Rilevare i difetti sopra e nelle parti in carbonio, ripararle completamente Se ci sono grossi danni, informare Lamborghini ed i fornitori Tenere le aree di ripristino il più piccole possibili, carteggiando al minimo il film di costruzione Evitare porosità nel carteggiare le superfici, segni di massima, carteggiare alla fine con una grana più fine (es: P80, P120, P180, P240), utilizzare la polvere di controllo (3M) Carteggiare tutte le zone, angoli, bordi con una carta fine (P240) Carteggiare tutti i bordi e gli angoli completamente (3M Sanding Pad) Non toccare il metallo con le mani nude, lavare le zone di metallo con wash primer Carteggiare le parti in carbonio dopo la carteggiatura del EP-fondo prima dell'applicazione del PU-fondo. Non carteggiare ancora le parti in carbonio! Prima del PU-fondo / Applicare il Wash-primer sul tutta la superficie, sgrassare e lasciare asciugare Controllare per eventuali difettosità e ripararle come ultima fase Documentare tutte le azioni in una "scheda scocca"	Prima revisione (prima dell'applicazione del fondo)
Preparazione scocca Prima revisione	Fondo errato o materiale errato Mixup dei singoli componenti del fondo Preparazione del mix dei materiali non a procedura Data di scadenza dei materiali superata Superficie non propriamente pulita / polverosa Temperatura di essiccazione troppo bassa / troppo alta Temperatura di cottura troppo bassa / troppo alta Film di costruzione troppo basso / troppo alto Tempo di flash-off non a procedura	Scegliere il materiale per il fondo a seconda della superficie (Metallo / Carbonio) Preparare il fondo seguendo le schede tecniche Non eccedere i tempi di scadenza e di apertura dei prodotti Controllare il film di costruzione, non eccedere il livello massimo Mantenere i tempi di flash-off fra le applicazioni, come specificato, non accorciarli o allungarli! Mantenere i tempi di essiccazione e le temperature di essiccazione Controllare che la superficie sia pulita prima dell'applicazione del fondo Effettuare un controllo finale per difettosità, riparare i difetti Documentare tutte le azioni in una "scheda scocca"	Prima revisione (applicazione del fondo)
Preparazione scocca Seconda revisione	Porosità nel sottostrato Segni di carteggiatura ancora visibili nel sottostrato runouts nel fondo / zone rovinate Inclusioni di sporco	Trovare tutte le porosità e chiuderle prima di carteggiare Per rendere più visibili i difetti ed i segni di carteggiatura utilizzare la polvere di struttura (3M) Carteggiare runouts dal materiale separatamente dalla fase di carteggiatura Non usare carte con grana di massima (carteggiare con P400 / P500) Carteggiare i bordi e gli angoli adeguatamente Eliminare la polvere dalla scocca dopo averla carteggiata, dentro e fuori, lavarla completamente. Dopo averla mascherata, pulirla di nuovo Effettuare un controllo finale per difettosità, riparare i difetti Documentare tutte le azioni in una "scheda scocca"	Preparazione, prima della verniciatura

PDF created with FinePrint pdfFactory Pro trial version http://www.softwarelabs.com

Verniciatura Base Trasparente	Componenti errati per la preparazione dei materiali Film di costruzione troppo basso/ troppo alto Runouts, opacità, strisce Inclusioni di sporco nel BC/CC Tempo di flash-off non rispettato Tempo di cottura non rispettato Temperatura di cottura non rispettata	Controllare che la scocca sia pulita prima di iniziare la verniciatura e pulirla completamente Scegliere propriamente i componenti pre la verniciatura e la temperatura adatta secondo le schede tecniche. Non eccedere con il massimo o il minimo film di costruzione Evitare inclusioni di sporco dopo l'applicazione della base, cercare di ripararli prima dell'applicazione del trasparente se possibile. Rimuovere gli sporchini dalla superficie. Evitare runouts e infumanate durante l'applicazione Applicare omogeneamente il trasparente senza runouts, strutture, bassa superficie Mantenere il tempo di flash-off tra tutte le applicazioni, come da specifiche (controllare il range di min/max) Mantenere i tempi e le temperature di essicazione, come da specifiche (entro il range min/max) Effettuare un controllo finale per difettosità, riparare i difetti Documentare tutte le azioni in una "scheda scocca"	Verniciatori
Verniciatura Neri opachi	Mascheratura del topcoat Polvere nella vernice nera sul topcoat Mascheratura dei bordi in nero	Mascheratura precisa delle parti che non vanno verniciate in nero opaco Controllare bene che l'adesione del nastro adesivo sia sufficiente Cercare di mascherare le zone su superfici lisce Controllare che la linea di mascheratura sia corretta, specialmente nelle zone verniciate Non causare sfilacciamenti nei bordi Controllare la mascheratura per eventuali perdite prima dell'applicazione del nero opaco Controllare la scocca verniciata in nero opaco prima di rimuovere la mascheratura Rimuovere la polvere della verniciatura nero opaco Effettuare un controllo finale per difettosità, riparare i difetti Documentare tutte le azioni in una "scheda scocca"	Verniciatori
Finizione Carteggiatura fine, rettifiche finizione	Carteggiatura della superficie Segni di carteggiatura di massima visibili, errata carta buchi nel topcoat dovute ad inclusioni Struttura di massima rimanenente nel topcoat Segni di carteggiatura visibili rimasti dopo la finizione Zone opache, porosità nel sottostrato Bordi di mascheratura visibili, runouts Rimanenza di materiale di finizione nei bordi, polvere Svista di difetti nel topcoat Finizione sommaria, alta temperatura nella fase di finizione	Carteggiare solo dove ci sono prima i difetti (sporchini...) Scegliere una carta media adatta, non carteggiare sopra ai bordi Carteggiare tutta la suferficie e non per zone differenti Usare il prodotto medio adatto, utilizzando quello più fine per particolare parti Cercare di colmare i buchi nel topcoat completamente con il trasparente, carteggiare equamente, circondando le zone, usare lo spray di controllo (3M, Isopropanolo) tra le fasi Rendere visibili le parti non sufficientemente finite e finirle Finire in diffenti fasi, la finizione finale va fatta con lucidatura high-gloss Pulire la scocca da residui di media finizione Effettuare un controllo finale per difettosità, riparare i difetti Documentare tutte le azioni in una "scheda scocca"	Finizione
Controllo prima della consegna Audit ZP5	Luce non sufficiente Non sufficiente tempo per il controllo Difetti non evidenziati La scocca è stata toccata con le mani nude troppe volte Non ci sono informazioni incrociate dei reparti di produzione relative ai difetti ed ai ripristini Svista di difetti rilevanti	Assicurarsi di avere una buona illuminazione, prendersi il tempo sufficiente per il controllo Segnalare tutti i difetti con un evidenziatore e rilavorarli tutti Reperire le informazioni dai reparti di produzione per le cause dei difetti Documentare tutti i difetti Ricontrollare tutti i difetti dopo la loro rilavorazione Effettuare un controllo finale per difettosità, riparare i difetti Documentare tutte le azioni in una "scheda scocca" Preparare la documentazione per la scocca e prepararla per la spedizione	Audit Zp5

Implementazione delle misure indicate in .... da:

only for view

Automobili Lamboghini S.p.A.
Via Modena, 12
I-40019 Sant' Agata Bolognese
lamborghini.com

Data:

Firma:

Lamborghini ...

PDF created with FinePrint pdfFactory Pro trial version http://www.softwarelabs.com

Automobili Lamborghini

ENGLISH

Action plan paint shop: All Paint shop's

Subject: Quality, Painting, Finish

Document only for view

Stand: 08.08.05

Subject	Possible mistakes	Preventive Measure	Responsible Area
Delivery Completed Body	Dirty carbodies EDP rough, dirty, sandmarks, overcoated EDP runouts and EDP deposits on frame; corrosion Porosity on carbon parts free visible carbon (sanded edges etc.) EP-primer rough, repaired, with defects defects from substrate, holes, dents steel parts with bumps, dents, scratches, sandmarks scratches on parts proper sealing of carbody	Check carbodies at delivery for damage, cover carbody Check EDP for sandmarks, dirt, inclusions, runouts, rust spots, measure filmbuild Check carbon parts for free visible carbon, scratches, pores, dents, holes, repaired areas Check stopped areas Check steel parts for damage, dents, scratches, sandmarks, edges Check EP-primer for good surface and no defects Decide which defects can be repaired without excessive efforts Record Defects on a "car body sheet" Inform suppliers and Lamborghini about defects For gross damage, decide with Lamborghini how to handle removal of damage	Quality Control Receiving Goods
Preparation Steel parts Carbon parts	defects in and below EDP not repaired porosity on stopped parts visible sandmarks on surface bad paint adhesion at edges and corners porosity from carbon, no sufficient contact between EP-primer and carbon scratches, cavities, holes, open carbon, sanding surfacer under EP-primer, EP-primer rough with repaired areas, free visible carbon fibers	before start of work, clean car body thoroughly. detect defects in and on EDP and on metal substrate, repair completely If gross damage, inform Lamborghini and suppliers detect defects in and on carbon parts, repair completely If gross damage, inform Lamborghini and suppliers Keep stopped areas as small as possible, keep sanding surfacer filmbuild low Avoid pores in sanding surfacer, no coarse sandmarks, final sanding fine (eg: P80, P120, P180, P240), use control dust (3M). Sand all areas, corners, edges fine (P240) Sand all edges and corners thoroughly (3M Sanding Pad) Don't touch bare metal with naked hands, primer metal with wash primer Sand bare carbon areas after sanding with EP-primer before application of PU-primer Do not sand through to bare carbon again! before PU-primer / Wash-primer application clear surface very good, degrease and let dry Check for defects and repair them as final step Document all your actions to this stage	Preparation Area, before Primer Application
Preparation Primer Application	Wrong primer on wrong material Mixup of single primer components Preparation of material mix not according to procedure shelf life of material exceeded surface not properly cleaned / dusty drying temperature too low / too high baking temperature too low / too high film build too low / too high flash-off time not according to procedure	Choose primer material according to substrate (Metal / Carbon) Make primer preparation according to technical datasheet Do not exceed shelf life and open time Watch film builds, do not exceed maximum filmbuild Keep flash-off time between coatings within spec, do not shorten or lenghten! Keep drying times and drying temperatures Check if surface is cleaned before primer application Make final check for defects, repair defects Document all your actions to this stage	Preparation Area, Paint technician
Preparation Primer sanding / grinding	Pores from substrate still visible sandmarks from substrate runouts in primer / rough areas dirt inclusions	Find all pores and fill before sanding To make defects and sandmarks visible: use structure control dust (3M) Sand runouts from the material separate from the sanding step. Do not use coarse sandpaper (sand with P400 / P500) Sand all edges and corners properly De-dust carbody after sanding from inside and outside and clean thoroughly After masking, clean car body again. Make final check for defects, repair defects Document all your actions to this stage	Preparation, before painting

PDF created with FinePrint pdfFactory Pro trial version http://www.softwarelabs.com

Painting Basecoat Clearcoat	Wrong components for preparation of materials film builds too low / too high runouts, cloudiness, stripes dirt inclusions in BC/CC flash-off times not within specification baking times not within specification baking temperature not within specification	Make car body dust-free before start of coating activities, clean thoroughly Proper choice of coating components temperature needs according to datasheet Do not exceed maximum filmbuild or keep below minimum filmbuild Avoid dirt inclusions after basecoat, try to repair defects before clearcoat if possible Remove dirt inclusions from final film. Avoid runouts and clouds in basecoat Homogeneous clearcoat application without runouts, structure, low filmbuild areas Keep flash-off times between all applications within spec (watch min / max range) Keep drying temperatures and drying times within spec (within min / max range) Make final check for defects, repair defects Document all your actions to this stage	paint technician
Painting Black matte	sloppy masking of topcoat Black paint dust on topcoat sloppy masking of black contrast edges	Precise masking of parts which do not get matte coating Watch out for sufficient tape adhesion try to mask areas on smooth surface Watch out for correct line routing at high-contrast color borders do not cause frayed borders Check masking for leaks before matte black application Control car body for black paint dust after removal of masking remove black paint dust Make final check for defects, repair defects Document all your actions to this stage	paint technician
Finish fine sanding / grinding polish	sanding through to basecoat visible coarse sandmarks, wrong sandpaper holes in topcoat due to ripped-out inclusions coarse structure remaining in topcoat visible sandmarks remain after polishing matte areas, porosity from substrate visible masking edges, runouts polishing material remaining at edges, polishing dust oversight of defects in topcoat coarse polishing, temperature during polishing too high	sand only the defects first (dust inclusions...) choose proper sanding medium, do not sand through on edges even sanding on surface structure, no special treatment for different areas use proper polishing medium with decreasing (finer) particle size try to fill holes in topcoat completely with clearcoat, sand to make equal to surrounding use control spray (3M, Isopropanol) between polishing steps to make insufficiently polished areas visible polish in several steps, final finish with high-gloss polishing thorough cleaning of car body from residual polishing medium Make final check for defects, repair defects Document all your actions to this stage	finish area
Check before delivery check at Zp 5	Not sufficient lighting Not enough time for inspection Defects not marked Excessive handling with bare hands of car body no information of impacted production departments about defects oversight of relevant defects	Ensure good lighting, take enough time for inspection of car body mark all defects with grease marker and work successive on all defects Information to production department which caused the defect Document all defects Re-inspect all defects after they have been reworked Make final check for defects, repair defects Document all your actions to this stage Finish paperwork for car body, make ready for shipping	technician check at Zp5

Implementation of measurements at pint shop from:

Document only for view

Automobili Lamboghini S.p.A.
Via Modena, 12
I-40019 Sant' Agata Bolognese
lamborghini.com

Date:

Signature:

Lamborghini paint shop

PDF created with FinePrint pdfFactory Pro trial version http://www.softwarelabs.com

Repair manual Blistering

Automobili Lamborghini S.p.A.

Lamborghini Murcièlago

This manual is also available in german and italian language.

English/USA/Canada, V2, 12.01.2006

Copyright by PPG Industries Lacke GmbH on behalf of Lamborghini S.p.A. Autor: Franco Busia

Grafik: Mike Rohde

Origin of blistering

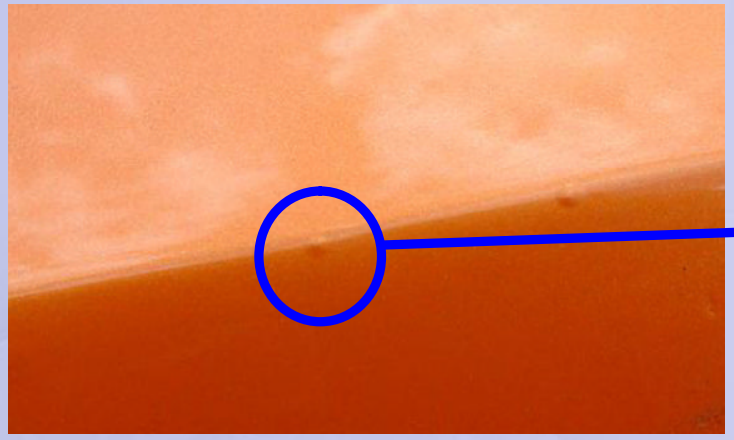

Blistering can arise on
Carbon- and Steel- parts.

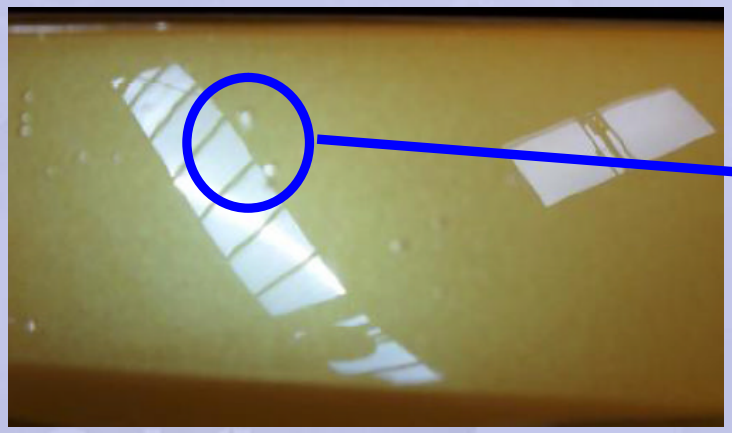

Copyright by PPG Industries Lacke GmbH on behalf of Lamborghini S.p.A. Autor: Franco Busia

Grafik: Mike Rohde

Origin of blistering

Blistering can occur in different types

Incorrect cathodic dip primer

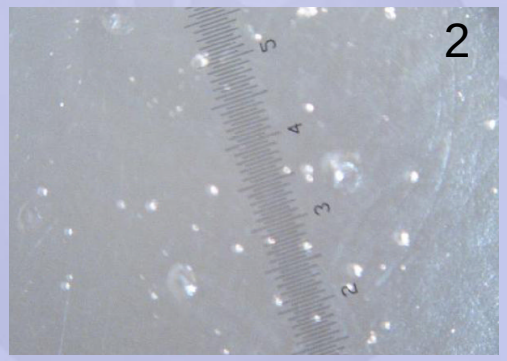

1. Blistering by process and flow by ultrafiltrat

2. Incomplete coating by pollution

3. Drainage of e-coat and insufficient bonding force by incorrect process

Copyright by PPG Industries Lacke GmbH on behalf of Lamborghini S.p.A. Autor: Franco Busia

Grafik: Mike Rohde

Origin of blistering

Blistering can occur in different types

Imperfect Carbon- parts

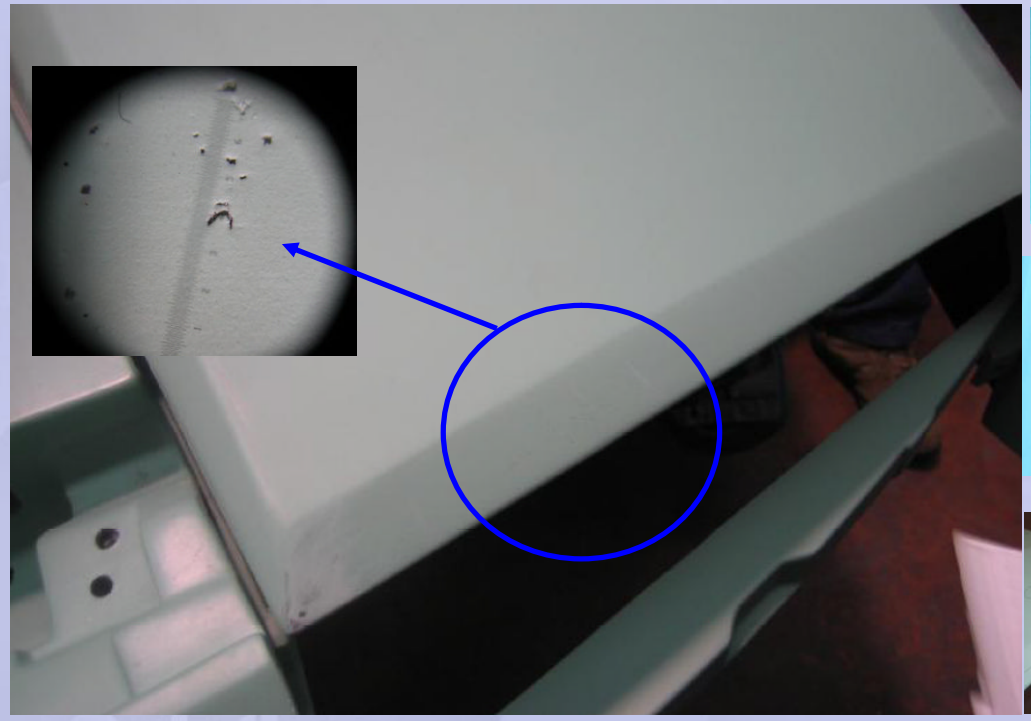

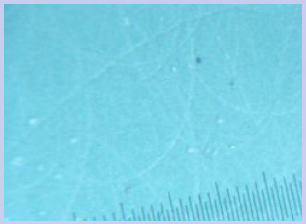

Porosity

Non coated Carbon

Scratch marks, Grinding marks and other imperfections

Copyright by PPG Industries Lacke GmbH on behalf of Lamborghini S.p.A. Autor: Franco Busia

Origin of blistering

Blistering can occur in different types

Salt deposits on the body surface

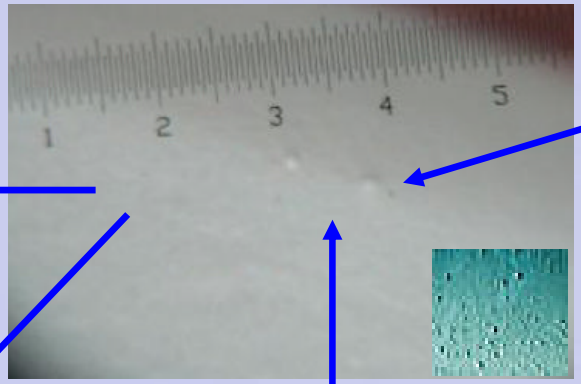

Salt on the body-surface

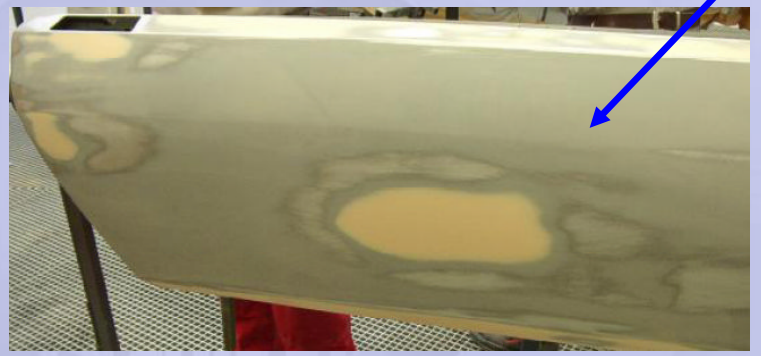

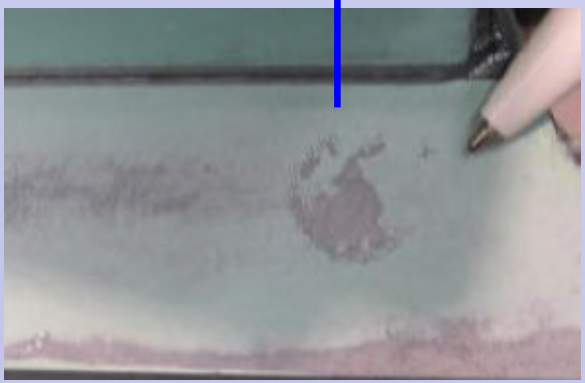

Fingerprints cause salt deposits on the surface, those can create Blistering on the body surface.

Copyright by PPG Industries Lacke GmbH on behalf of Lamborghini S.p.A. Autor: Franco Busia

Grafik: Mike Rohde

Origin of blistering

Blistering can create by:

Porosity by basic material,
Incorrect production of Carbon- parts,
Improper handling prior to production,
Residue deposits of pollution by the pre-production processes,
Solvents beneat the finish,
humidity by salt residues on the surface,
Improper cleaning of the surface

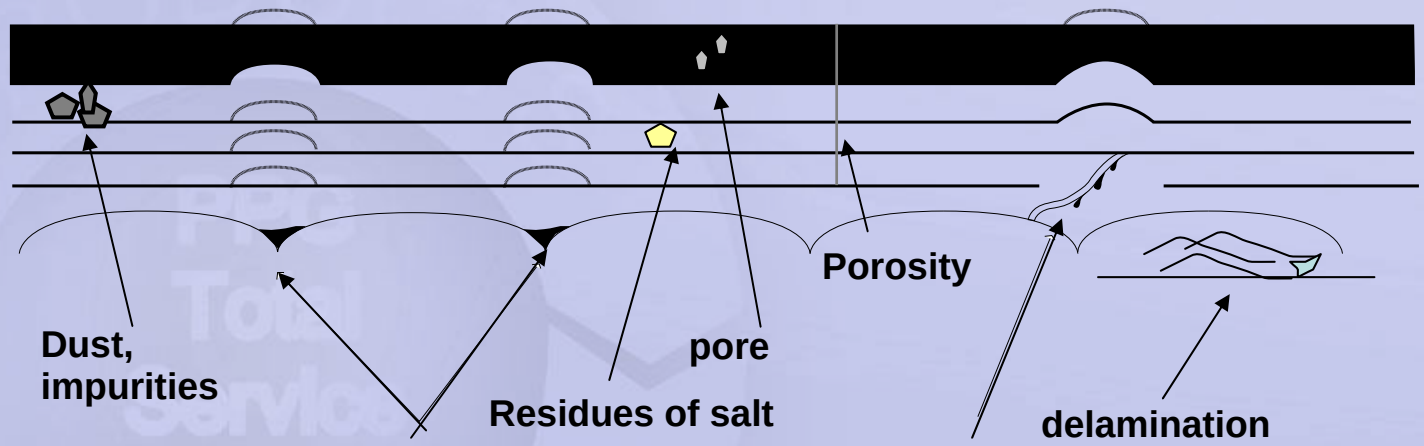

Clearcoat

Epoxid- primer

Carbonfiber or other surface

Separating material

Residues of solvent

Copyright by PPG Industries Lacke GmbH on behalf of Lamborghini S.p.A. Autor: Franco Busia

Worldwide customer service

On behalf of Lamborghini
Global advise and support in case of blistering rework by car bodies is possible (if needed) by
PPG TSS- Team in your workshop.
(Using this service create cost and must be paid)

PPG Team global for Lamborghini
paint.competence@ppg.com
(Lamborghini will informed when use this service)

Copyright by PPG Industries Lacke GmbH on behalf of Lamborghini S.p.A. Autor: Franco Busia

Technical manual of rework

Copyright by PPG Industries Lacke GmbH on behalf of Lamborghini S.p.A. Autor: Franco Busia

Grafik: Mike Rohde

Before you start with the rework,
read carefuly the
Safety Instruktions and Technical Data sheets!

For all activity respect the Safety Instructions and Technical Data sheets, Page 19+

Copyright by PPG Industries Lacke GmbH on behalf of Lamborghini S.p.A. Autor: Franco Busia Grafik: Mike Rohde

Rework of damage, Identification

1

Look for blistering and remove the paint layer by scratching with a sharp blade to define which single layer created the blistering. (CFK, e-coat, primer,.....)

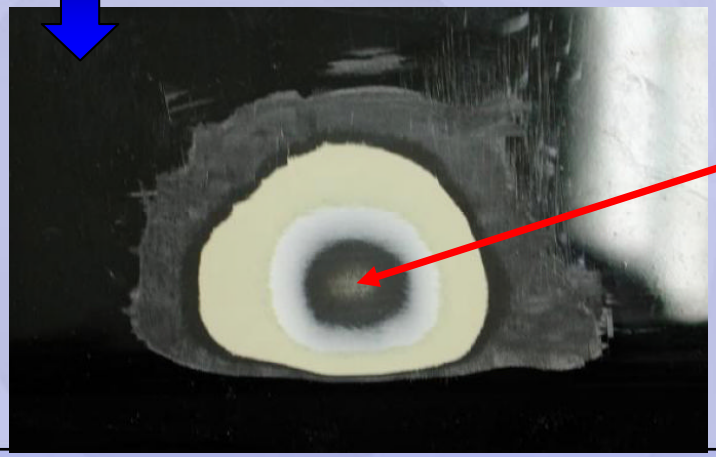

2

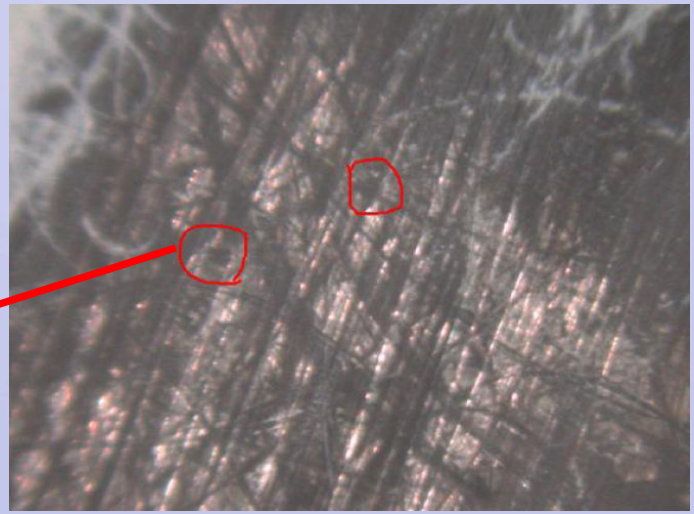

3

Example: damage in the e-coat

Copyright by PPG Industries Lacke GmbH on behalf of Lamborghini S.p.A. Autor: Franco Busia

Rework of the damage

At the area with blistering it is neccessary the grinding upon paint-layers without blistering or directly to the substrat (Steel, CFK, Primer...).

NON wet grinding!

Important: by all activity wear gloves!

Possible substrates are: Steel, e-coat, Carbon, Epoxid-primer, Filler, Primer surface or paint layer.

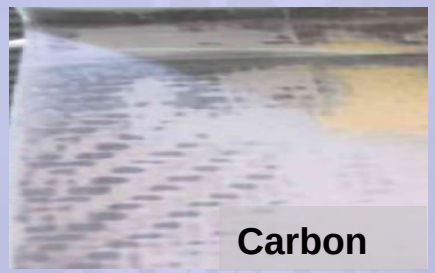

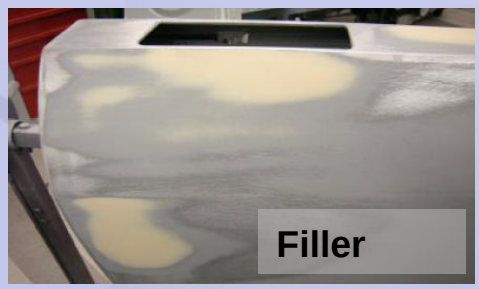

Copyright by PPG Industries Lacke GmbH on behalf of Lamborghini S.p.A. Autor: Franco Busia

Rework of damages, Steelparts

Steelparts (door and roof)

Grinding with P240, remove dust and cleaning by siliconremover*. Remove Sillicon completely.

Silicon-remover

For pure metall use washprimer*, after drying, application of 2K primer-surfacer*.

*how to use the material see technical datasheet

Copyright by PPG Industries Lacke GmbH on behalf of Lamborghini S.p.A. Autor: Franco Busia

Grafik: Mike Rohde

Rework of damages, Carbonparts

Carbonparts (all the other parts)

Pure Carbon MUST be protected with Epoxidprimer* (important). After curing grinding by P240, DO NOT remove the Epoxid- primer!

Grinding with P180 to P220, remove dust and cleaning by siliconremover*. Remove Sillicon completely.

Silicon-remover

*how to use the material see technical datasheet

Copyright by PPG Industries Lacke GmbH on behalf of Lamborghini S.p.A. Autor: Franco Busia

Rework of damages, Carbonparts

After grinding remove dust and cleaning by siliconremover*. Remove Sillicon completely.

After the cleaning, application of 3 or 4 times 2K Primer-surfacer*. NO Primer-surfacer directly on Carbon!

*how to use the material see technical datasheet

Copyright by PPG Industries Lacke GmbH on behalf of Lamborghini S.p.A. Autor: Franco Busia

Rework of damages, grinding the primer-surfacer

Use P400 for grinding by hand or machine, at big area`s use black controllpowder*. Wear gloves!

After grinding remove dust and cleaning by siliconremover*. Remove Sillicon completely.

*how to use the material see technical datasheet

Copyright by PPG Industries Lacke GmbH on behalf of Lamborghini S.p.A. Autor: Franco Busia

Rework of damages, Color

For the paintingprocess cover the carbody. Before start the painting, remove dust and clean the surface completely using silicon remover*.
Search for the right color.
In cases of difficult color`s it is neccessary to adapt the right color.

*how to use the material see technical datasheet

Copyright by PPG Industries Lacke GmbH on behalf of Lamborghini S.p.A. Autor: Franco Busia

Rework of damages, Painting

Application of Basecoat*, for colors with 2 or more layers use the correct steps.

After flash off, apply two coats of Clearcoat*.

*how to use the material see technical datasheet

Copyright by PPG Industries Lacke GmbH on behalf of Lamborghini S.p.A. Autor: Franco Busia

Rework of damages, Finish

When the drying time is completely finished,
it is neccessary to do the polishing process .
(Grinding small mistakes, use 2000er sandpaper, Polish* and highgloss-polish*)

The right surface after painting look`s like this.

(this part is a bumper)

***how to use the material see technical datasheet**

Copyright by PPG Industries Lacke GmbH on behalf of Lamborghini S.p.A. Autor: Franco Busia

Safety Instructions

Automobili Lamborghini S.p.A.

SAFETY INSTRUCTIONS

Copyright by PPG Industries Lacke GmbH on behalf of Lamborghini S.p.A. Autor: Franco Busia

Grafik: Mike Rohde

Safety Instructions

Read also the
Technical Data Sheet

Safety pictograms

A. **Earmuffs must be worn**
This symbol indicates that the operator must wear earmuffs due to the risk of noise pollution.

B. **Gloves must be worn**
This symbol indicates that the operator must wear heatproof safety gloves.

C. **Protective eyewear must be worn**
This symbol indicates that the operator must wear protective eyewear.

D. **Mask must be worn**
This symbol indicates that the operator must wear a safety mask.

E. **Protective footwear must be worn**
This symbol indicates that the operator must wear protective footwear.

F. **Work overalls must be worn**
This symbol indicates that the operator must wear work overalls.

Copyright by PPG Industries Lacke GmbH on behalf of Lamborghini S.p.A. Autor: Franco Busia

Safety Instructions

Read also the
Technical Data Sheet

G. Danger of explosion
This symbol indicates that the operator must exercise the utmost care; when the battery is electrically charged, it produces explosive hydrogen gas which can cause personal injury.

H. Fire hazard
This symbol indicates that the operator must exercise the utmost care. Do not expose the battery to naked flames, electricity or direct light. Do not smoke and do not invert the battery polarity.

I. Toxic substance inhalation hazard
This symbol indicates that the operator must exercise the utmost care due to the risk of inhaling toxic substances.

L. Battery acid fume hazard
This symbol indicates that the operator must exercise the utmost care due to the presence of battery acid fumes. The battery contains sulphuric acid: always wear protective gloves and eyewear. Do not tilt the battery: acid may leak out of the ventilation apertures.
If the acid comes into direct contact with the skin or eyes, rinse with cold water for a few minutes and call a doctor.

M. Danger of hot surfaces
This symbol indicates that the operator must exercise the utmost care as regards any car component that may be extremely hot after the car has been used.

N. Danger of crushing upper or lower limbs
This symbol indicates that the operator must exercise the utmost care due to the presence of moving mechanical components. Careless or unexpected activation of these components could crush the operator's upper or lower limbs.

O. Dragging hazard
This symbol indicates that the operator must exercise the utmost care due to the presence of moving mechanical components. Careless or unexpected activation of these components could result in entanglement and subsequent dragging which could cause personal injury.

P. Danger of corrosive substances
This symbol indicates that the operator must exercise the utmost care due to the risk of corrosion.

Copyright by PPG Industries Lacke GmbH on behalf of Lamborghini S.p.A. Autor: Franco Busia

Grafik: Mike Rohde

More Safety Instructions USA / Canada

1. Go to this site:

http://www.ppg.com/cr-refinish/

2.

3. **Select Safety Informations or Product Informations**

Copyright by PPG Industries Lacke GmbH on behalf of Lamborghini S.p.A. Autor: Franco Busia

More Safety Instructions other Country

1. Go to this site:

http://www.ppg.com/cr-refinish/

2. **Select Your Country and Your language**

3. **Select Products and Service**

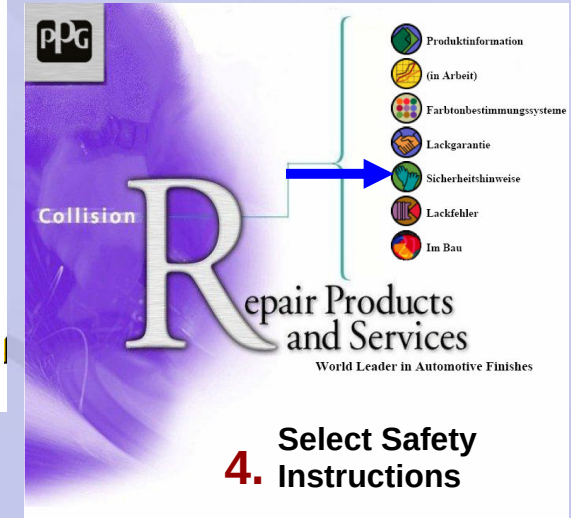

4. **Select Safety Instructions**

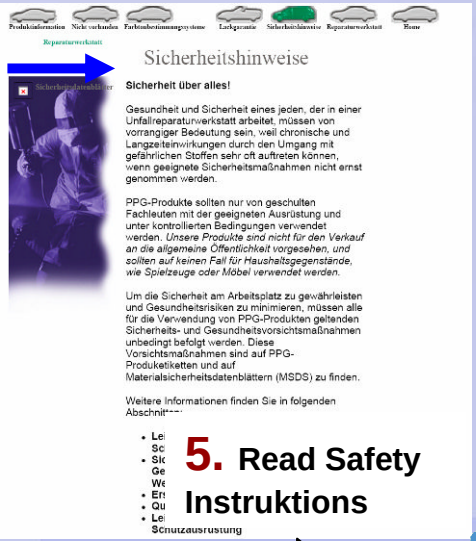

5. **Read Safety Instruktions**

Automobili Lamborghini S.p.A.

Copyright by PPG Industries Lacke GmbH on behalf of Lamborghini S.p.A. Autor: Franco Busia

Grafik: Mike Rohde

PPG AUTO REFINISH

GLOBAL REFINISH SYSTEM

Product Information

DP40 D834

Chromate-Free 2K Epoxy Surfacer
DP40 Surfacer D834
DP402 Hardener D835

PRODUCT DESCRIPTION

DP40 is a versatile 2K Epoxy Surfacer. It is light grey in colour, chromate-free and has good corrosion resistance over bare metal.

DP40 has good adhesion to a wide variety of suitably prepared substrates. These include bare and galvanised steel, aluminium, GRP and fibreglass, painted surfaces and fillers, and a wide range of plastic substrates.

DP40 is ideally used as a wet-on-wet or non-sand surfacer, but may be stoved or air-dried if required. It may also be used as a one-coat sealer over sanded 2K primers and surfacers, when it fills sanding marks and promotes optimum gloss holdout in the topcoat.

DP40 is also an excellent sealer for use over TPA finishes.

PREPARATION OF SUBSTRATE

Substrate	*Preparation*
Bare steel	P80 - 120
Galvanised steel	P400 (dry)
Zintect	Fine sanding pad
Aluminium and alloys	P280 - 320 (dry)
Electropaint	P360 (dry)/P800 (wet)
Aged painted surfaces	P280/P360 (dry)/P400 - P500 (wet)
GRP, Fiber Glass	P320 (dry)
Polyester filler	P80 - P120 (dry)

Before and after any sanding operation, the substrate must be thoroughly degreased.

PPG Industries

Grafik: Mike Rohde

Copyright by PPG Industries Lacke GmbH on behalf of Lamborghini S.p.A. Autor: Franco Busia

PRODUCT SET-UP

	Non-sand Surfacer	Wet-on-wet Surfacer	Sealer
Mixing ratio:	D834 1 vol D835 1 vol	D834 1 vol D835 1 vol	D834 1 vol D835 1 vol D866* 0.5 vol
Potlife at 20°C:	16 hours	16 hours	16 hours
Spray viscosity at 20°C:	15 seconds DIN4	15 seconds DIN4	12 seconds DIN4

* For exceptional conditions of temperature and humidity (>35°C / >70 %), the use of Very Slow Thinner D869 is recommended.

APPLICATION, FLASH-OFF AND DRYING

	Non-sand Surfacer	Wet-on-wet Surfacer	Sealer
Spraygun set-up:	1.4 - 1.8 mm	1.4 - 1.8 mm	1.4 - 1.6 mm
Number of coats:	2 - 4	2	1 full
Flash-off at 20°C:			
- *Between coats*	10 minutes	5 - 10 minutes	n/a
- *Before topcoat*	45 minutes	15 minutes	10 minutes
*Drying times:***			
- *Dust free at 20°C*	15 minutes	15 minutes	n/a
- *Through dry at 20°C*	4 hours	n/a	n/a
- *Through dry at 60°C*	30 minutes	n/a	n/a
- *Through dry IR medium*	10 minutes	n/a	n/a
Total dry film build:	30 - 50 µm	25 - 35 µm	15 – 20 µm
Theoretical coverage:	assuming 100% transfer efficiency and dry film thickness as indicated: 6 - 6.5 m²/l	6.5 - 7 m²/l	9 - 10 m²/l

** Stoving times are for quoted metal temperature. Additional time should be allowed in the stoving schedule to allow metal to reach recommended temperature

2

Grafik: Mike Rohde
Copyright by PPG Industries Lacke GmbH on behalf of Lamborghini S.p.A. Autor: Franco Busia
PPG Industries

REPAIR AND RECOATING

	Non-sand Surfacer	Wet-on-wet Surfacer	Sealer
Sanding:		Not necessary in normal use	
Overcoat / Re-coat time:			
- *Over TPA*		Within 8 hours	
- *Other sufaces*		Degrease ↓ Abrade lightly (sanding pad) ↓ Degrease ↓ Apply 1 coat of DP40 ↓ Overcoat within 45 minutes	
Overcoat with:		PPG 2K primers	

PERFORMANCE AND LIMITATIONS

DP40 should not be used at lower temperature than 10°C and humidity higher than 80%.

EQUIPMENT CLEANING

After use, clean all equipment thoroughly with cleaning solvent or thinner.

HEALTH AND SAFETY

For comprehensive Health, Safety and Environmental advice, please refer to relevant Material Safety Data Sheets and product can labels.
Use the recommended safety equipment.

THIS PRODUCT IS FOR PROFESSIONAL USE ONLY.

The information given in this sheet is for guidance only. Any person using the product without first making further enquiries as to the suitability of the product for the intended purpose does so at his own risk and we can accept no liability for the performance of the product or for any loss or damage (other than death or personal injury resulting from our negligence) arising out of such use. The information contained in this sheet is liable to modification from time to time in the light of experience and our policy of continuous product development.

Drying times quoted are average times at 20°C. Film thickness, humidity and shop temperature can all affect drying times.

PPG Industries (UK) Limited.
Auto Refinish
Customer Service and
Sales Group,
Needham Road,
Stowmarket,
Suffolk,
IP14 2AD,
England.
Tel: 01449 771775
Fax: 01449 771547

International Sales
PPG Industries
Auto Refinish International,
Priory Road,
Warwick ,
CV34 4NA,
England.
Tel: +44 1926 403 255
Fax: +44 1926 410 249

PPG Industries

Grafik: Mike Rohde

Copyright by PPG Industries Lacke GmbH on behalf of Lamborghini S.p.A. Autor: Franco Busia

PPG FLEET

VOC

Product Information

DELFLEET F393

Chromate-free Wash Primer

PRODUCTS

Delfleet Chromate-Free Wash Primer	F393
Delfleet Reactive Reducer	F365
Delfleet Slow Thinner	F371
Delfleet Thinner	F372
Delfleet Thinner Fast	F373

PRODUCT DESCRIPTION

Delfleet Chromate-Free Wash Primer is a medium build wash etch primer which complies with current European VOC legislation.

It is designed to give good adhesion when used on new panels and to promote the adhesion of subsequent paint films.

It is equally suitable for use on small or large surfaces and may be used in a wet-on-wet system if required.

This product must always be catalysed with its own Reactive Reducer F365 before use.

SELECTION AND PREPARATION OF SUBSTRATE

Substrate	*Sand*	*Degrease*
New hot-rolled steel	Shot blast	No
New cold-rolled steel Old steel Zintec Galvanised steel Aluminium & alloys (except anodised aluminium *)	P80 - 120 (dry) P80 - 120 (dry) Scotch brite P400 (dry) P280 - 320(dry)	All surfaces should be thoroughly degreased using the appropriate PPG substrate cleaner
Aged painted surfaces	Wet P400 - 500 Dry P280 - 320	

* Prime anodised aluminium with F397 Delfleet etch primer

PPG Industries

Grafik: Mike Rohde

Copyright by PPG Industries Lacke GmbH on behalf of Lamborghini S.p.A. Autor: Franco Busia

GUIDE TO SELECTION OF SUBSTRATE CLEANERS

Code	*Product*	*Purpose*
D845	DX310 High Strength Degreaser	For use as a pre-cleaner in the first stage of the process. Use before starting any repair work.
D837	DX330 Spirit Wipe	Suitable for removing dirt, grease or other contaminants before or during the painting process.
D842	DX380 low VOC Cleaner	Particularly designed to remove contaminants after sanding, and in areas where VOC emissions should be minimised.

APPLICATION GUIDE

	HVLP	*Pressure Pot*
Mixing ratio:	F393 2 vols F365 1 vol Thinner* 0.5 vol	F393 2 vols F365 1 vol Thinner* 0.5 vol

* Choose thinner according to application temperature and size of vehicle

Thinner selection:	*Temperature*	*Thinner*
	Up to 18°C	F373
	18°C - 25°C	F372
	Over 25°C	F371

Pot life at 20°C:	Do not use 24 hours after mixing. The anti-corrosive properties will progressively reduce after this time.	
Spray viscosity DIN4/20°C:	15 - 18 seconds	15 - 18 seconds
Spray gun set-up:	1.3 - 1.6 mm	1.0 - 1.1 mm
Spray pressure:	0.5 - 0.7 bar at air cap	4 - 5 bar
	For conventional spraying: Apply 2 coats at 3.5 - 4 bar, using a 1.6 - 1.8 spray gun set-up	
Number of coats:	2	1 - 2
Flash-off time between coats at 20°C:	10 minutes	10 minutes

2

PPG Industries

Grafik: Mike Rohde

Copyright by PPG Industries Lacke GmbH on behalf of Lamborghini S.p.A. Autor: Franco Busia

APPLICATION GUIDE

	HVLP	Pressure Pot
Drying times:		
- *Dustfree*	5 - 10 minutes	5 - 10 minutes
- *Through dry at 20° C*	1 hour	1 hour
Total dry film build:		
- *Minimum*	15µ	15µ
- *Maximum*	25µ	25µ
Theoretical coverage:	6 - 7 m²/l	6 - 7 m²/l

Note: Theoretical coverage in m² per litre ready-to-spray mixture, giving 20µ dry film thickness

Sanding:	If necessary: P 600 - 800 (wet) or P320 - 400 (dry)
Overcoat / Re-coat time at 20°C:	
- *Minimum*	20 minutes
- *Maximum*	6 hours
Overcoat with:	Any Delfleet primer or topcoat

PERFORMANCE AND LIMITATIONS

This product is designed for use as an adhesion promoter. Do not use as an isolator.

Maximum dry film build is 25µ.

HEALTH AND SAFETY

For comprehensive Health, Safety and Environmental advice, please refer to the relevant Material Safety Data Sheets and Product can labels.

THIS PRODUCT IS FOR PROFESSIONAL USE ONLY.

The information given in this sheet is for guidance only. Any person using the product without first making further enquiries as to the suitability of the product for the intended purpose does so at his own risk and we can accept no liability for the performance of the product or for any loss or damage (other than death or personal injury resulting from our negligence) arising out of such use. The information contained in this sheet is liable to modification from time to time in the light of experience and our policy of continuous product development.

Drying times quoted are average times at 20°C. Film thickness, humidity and shop temperature can all affect drying times.

PPG Industries (UK) Limited.
Auto Refinish
Customer Service and
Sales Group,
Needham Road,
Stowmarket,
Suffolk,
IP14 2AD,
England.
Tel: 01449 771775
Fax: 01449 771547

International Sales
PPG Industries
Auto Refinish International,
Priory Road,
Warwick ,
CV34 4NA,
England.
Tel: +44 1926 403 255
Fax: +44 1926 410 249

PPG Industries

Grafik: Mike Rohde

Copyright by PPG Industries Lacke GmbH on behalf of Lamborghini S.p.A. Autor: Franco Busia

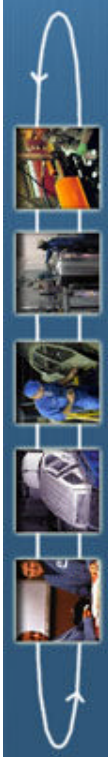

PPG AUTO REFINISH

GLOBAL REFINISH SYSTEM

Product Information

2K HS FILLER D8022

Fast drying 2K Surfacer
Hardener D858

PRODUCT DESCRIPTION

D8022 2K HS Filler is a grey 2K surfacer with high film-build and fast air-drying properties. Suitable for use under any PPG refinish topcoat, D8022 may be applied as either a VOC compliant, a high-build or an isolating surfacer simply by adjusting the quantity of thinner in the mix.

When used as a VOC compliant or high build surfacer, D8022 offers up to 250µ film build and is sandable after 3 hours air dry at 20°C. As an isolating surfacer, D8022 offers approx. 100µ and is sandable after only 2 hours at 20°C.

D8022 can be applied over suitably prepared polyester fillers, over sound, fully cured original paintwork, properly preprimed -bare steel and adhesion primers. D8022 may be air-dried, low baked or IR cured.

Product ready-to-spray VOC content :

Mixed for use as a VOC compliant surfacer	below 540g/l
Mixed for use as a high-build surfacer	above 540/l
Mixed for use as an isolating surfacer	above 540g/l

PREPARATION OF SUBSTRATE - DEGREASING

Before any preparation work, wash all surfaces to be painted with soap and water. Rinse and allow to dry before degreasing with a suitable PPG substrate cleaner :

		VOC Content
D842*	DX380 Low-VOC Cleaner	below 200g/lt

(If using D842, rinse the surface with T494 Deionised water immediately after degreasing, then dry the panel surface.)

D8401*	Waterborne Low-VOC Cleaner	below 200g/lt
D845	DX310 High Strength Degreaser	above 200g/lt
D837	DX330 Spirit Wipe	above 200g/lt

Ensure all substrates are thoroughly cleaned and dried before and after each stage of the preparation work. Always wipe substrate cleaner off the panel surface immediately, using a clean, dry cloth.

* Do not degrease polyester fillers using D842 or D8401.

PPG Industries

Copyright by PPG Industries Lacke GmbH on behalf of Lamborghini S.p.A. Autor: Franco Busia Grafik: Mike Rohde

PREPARATION OF SUBSTRATE - SANDING

Bare Steel should be lightly abraded and completely rust free before application. D8022 may be applied directly, but bare metal primers Universel or DP40 are recommended where optimum adhesion and corrosion resistance is required.

Other bare metals, including Zinc coated steel - should be primed with either Universel or DP40 before the application of D8022.

Original Paintwork or Primers should be sanded using P320 grade paper (dry) or P360 grade paper (wet). Spot prime any exposed bare metal with bare metal primer Universel or DP40.

Polyester Fillers should be dry sanded using a sequence of grade of paper grades suitable for the chosen application of D8022 :
P80-P120 when using D8022 as a high build or VOC compliant surfacer (2-4 coats).
P80-P120-P240 when using D8022 as an isolating surfacer (1-2 coats).

MIXING

Select Product Application :	**High Build Surfacer**	**VOC Compliant Surfacer**	**Isolating Surfacer**
Mixing Ratio :	D8022 3 vol D858 1 vol Thinner* 0.4 vol	D8022 3 vol D858 1 vol Thinner* 0.3 vol	D8022 3 vol D858 1 vol Thinner* 1 vol

Thinner Selection :

Temperature	*Thinner*
Up to 18°C	D808 Fast Thinner
18-25°C	D866 2K Primer Thinner
25-35°C	D812 Slow Thinner
Above 35°C	D869 Extra Slow Thinner

	High Build or VOC Compliant Surfacer	**Isolating Surfacer**
Potlife at 20° C :	30-45 minutes	45-60 minutes
Spray viscosity DIN4/20°C:	45-50 seconds	25 seconds

SPRAYGUN SETUP

	High Build or VOC Compliant Surfacer	**Isolating Surfacer**
Fluid Tip, Gravity :	1.8mm	1.6mm
Fluid Tip, Suction	Not recommended	1.8mm
Pressure :	Follow spraygun manufacturer's recommendations	

PPG Industries

Grafik: Mike Rohde

Copyright by PPG Industries Lacke GmbH on behalf of Lamborghini S.p.A. Autor: Franco Busia

APPLICATION GUIDE

	High Build or VOC Compliant Surfacer	Isolating Surfacer
Number of coats :	2-4	1-2
Flash-off/20° C:		
- between coats	10 minutes	5 minutes
- before stoving	10 minutes	10 minutes

DRYING

	High Build or VOC Compliant Surfacer	Isolating Surfacer
Dust free/20°C	15 minutes	10 minutes
Sandable/20°C	3 hours	2 hours
Through dry/60°C	30 minutes*	30 minutes*
Through dry/IR medium	10 minutes	10 minutes

* Drying times with substrate at 60°C metal temperature.

FILM PROPERTIES

	High Build or VOC Compliant Surfacer	Isolating Surfacer
Dry Film Builds :		
- maximum	250µ	100µ
- minimum	150µ	75µ
*Theoretical coverage***	approx. $3m^2$ / litre	approx. 8 m^2 / litre

**Theoretical coverage per ready to spray litre, assuming 100% transfer efficiency and giving dry film thickness between indicated minimum and maximum values.

SANDING

	High Build or VOC Compliant Surfacer	Isolating Surfacer
Dry :	P240 followed by P360	P240 followed by P360
Wet :	P600 followed by P800	P600 followed by P800

TOPCOATING

D8022 2K HS Filler may be overcoated directly with the following topcoat products :

Global Refinish System/Deltron BC Basecoat Colour
Global Refinish System/Deltron DG Direct Gloss Colour
Global Refinish System/Deltron UHS Ultra High Solids Direct Gloss Colour
Envirobase Waterborne Basecoat Colour *(See below)

3

PPG Industries

Copyright by PPG Industries Lacke GmbH on behalf of Lamborghini S.p.A. Autor: Franco Busia

Grafik: Mike Rohde

SPOT PRIMING

When spot priming D8022, adopt the following procedure:

1. Ensure that the surface is thoroughly sanded to the panel edge or to a distance several centimetres beyond the damaged area, whichever is smaller.
2. Apply a suitable number of coats to the damaged area, allowing the correct flash-off times. Apply the final coat of material activated and thinned at 3 : 1 : 2, covering a larger area that fully wets out the previous overspray edge.
3. During sanding, be careful to thoroughly level the repair edge.

NOTE: Do Not Spot Prime under Envirobase.

WET-ON-WET APPLICATION

If required, D8022 may be mixed 3:1:2 and used wet-on-wet under the recommended topcoats (see above). Application is 1-2 coats, with 5 minutes flash off between coats of D8022 and a flash off time of at least 20 minutes/20°C (maximum 30 minutes) before application of topcoat.

LIMITATIONS

Use only D858 Hardener with D8022. Accelerators should NOT be used.
D8022 and D858 are sensitive to moisture, so all equipment should be perfectly dry.
When the humidity range is 70-80%, use Very Slow Thinner D869. Do not use D8022 when humidity levels exceed 80%.
When used under Envirobase, D8022 should only be used to prime complete panels. DO NOT use as a spot primer

EQUIPMENT CLEANING

Part used cans of hardener must be closed immediately after use.

After use, clean spray equipment thoroughly with cleaning solvent or thinner.

HEALTH AND SAFETY

PRODUCT FOR PROFESSIONAL USE ONLY. See Manufacturer's Safety Data Sheet relating to this product at: **http://www.ppg.com/PPG_MSDS**
Use the recommended safety equipment.

THIS PRODUCT IS FOR PROFESSIONAL USE ONLY.

The information given in this sheet is for guidance only. Any person using the product without first making further enquiries as to the suitability of the product for the intended purpose does so at his own risk and we can accept no liability for the performance of the product or for any loss or damage (other than death or personal injury resulting from our negligence) arising out of such use. The information contained in this sheet is liable to modification from time to time in the light of our experience and our policy of continuous product development.

Drying times quoted are average times at 20° C. Film thickness, humidity and temperature can all affect drying times.

PPG Industries (UK) Limited.
Auto Refinish
Customer Service and Sales Group,
Needham Road,
Stowmarket,
Suffolk.
IP14 2AD,
England.
Tel: 01449 771775
Fax: 01449 773480

PPG Industries

Grafik: Mike Rohde

Copyright by PPG Industries Lacke GmbH on behalf of Lamborghini S.p.A. Autor: Franco Busia

PPG AUTO REFINISH

GLOBAL REFINISH SYSTEM

Product information

Deltron BC

Basecoat colour

PRODUCTS

Deltron Base Coat Tinters	D7xx,D9xx
Deltron Thinners	D808,D807, D812, D869
Deltron BC Fade-out Thinner	D851
Deltron MS Hardener	D841
For matt, satin and textured finishes	
Deltron Texture Additive	D843 to create a fine textured 'suede' effect
Deltron Leather Grain Additive	D844 to create a coarser, more pronounced textured finish

PRODUCT DESCRIPTION

The Deltron BC system consists of high opacity solid , metallic and mica colours.
Used in conjunction with a recommended PPG repair system, Deltron BC meets or exceeds the performance requirements of motor manufacturer paint system warranties. As part of the Deltron Global Refinish System, Deltron BC carries a large number of OEM approvals.

PREPARATION OF SUBSTRATE

Substrate	*Preparation*
PPG 2K primers	P600 - P800 (wet) / P400 - P500 (dry)
Electropaint	P600 - P800 (wet) / P400 - P500 (dry)
Sound 2K finishes	P600 - P800 (wet) / P400 - P500 (dry)
TPA	Must be sealed (e.g. D834)

Before and after any sanding operation, the substrate must be thoroughly degreased.

PPG Industries

Grafik: Mike Rohde

Copyright by PPG Industries Lacke GmbH on behalf of Lamborghini S.p.A. Autor: Franco Busia

PRODUCT SET-UP

Mixing ratio:	Deltron BC *	1 vol
	Thinner **	1 vol

* See 'Performance and Limitations' for use with D841 MS Hardener

** *Choose thinner according to application temperature*

Temperature	*BC Solid Colour*	*BC Metallic/Mica Colour*
Up to 18°C	D808	D808
18°C - 25°C	D808	D807
25°C – 35°C	D807	D812
Above 35°C	D812	D869

Potlife: No limit

Spray viscosity at 20°C: 15 seconds DIN4

APPLICATION, FLASH-OFF AND DRYING

Spraygun set-up: 1.4 - 1.6 mm

Number of coats: 2
(+1 control coat for metallic and micas)

Flash-off at 20°C:

- *between coats* 10 minutes
- *before clearcoat* 15 minutes

Taping time: 15 minutes

Total dry film build: 10 - 25 µm

Theoretical coverage: assuming 100% transfer efficiency and dry film thickness as indicated:
3.5 - 7 m²/l

PPG Industries

Grafik: Mike Rohde

Copyright by PPG Industries Lacke GmbH on behalf of Lamborghini S.p.A. Autor: Franco Busia

REPAIR AND RECOATING

Sanding:	If necessary, de-nib Deltron BC, after 20 minutes flash-off, using fine sand paper (P1200 - P1500) followed by a touch-up repair (see section on Fade-Out Technique) prior to the clearcoat application.
Overcoat / Re-coat time at 20°C:	
- *Minimum*	15 minutes
- *Maximum*	24 hours
- *After 24 hours*	1 Coat of Deltron BC has to be applied prior to clearcoat application
Overcoat with:	Deltron Clearcoats

FADE-OUT TECHNIQUE

Fading out Deltron BC is necessary for spot repair and advisable when metallic or mica colours have to be repaired. Use D851 BC Fade-out Thinner as follows :

- Prepare Deltron BC colour as specified in this data sheet
- Using light inward strokes, achieve coverage on the repaired area
- Thin 1 part of the ready-for-use Deltron BC with 1 part D851 Deltron Fade-out Thinner
- Use this mixture to fade the repair edges spraying from the outside to the inside of the repair area
- Repeat the last step until the potential colour difference has been lost
- Allow 20 minutes flash-off before clearcoating

PERFORMANCE AND LIMITATIONS

For optimum durability and adhesion BC may be mixed 10:1 with D841 MS Hardener, and then thinned 1:1 with GRS Thinner prior to application. Potlife of the activated basecoat is in excess of 48 hours. Application and drying properties are unchanged.

EQUIPMENT CLEANING

After use, clean all equipment thoroughly with cleaning solvent or thinner.

HEALTH AND SAFETY

For comprehensive Health, Safety and Environmental advice, please refer to the relevant Material Safety Data Sheets and product can labels.
Use the recommended safety equipment.

THIS PRODUCT IS FOR PROFESSIONAL USE ONLY.

The information given in this sheet is for guidance only. Any person using the product without first making further enquiries as to the suitability of the product for the intended purpose does so at his own risk and we can accept no liability for the performance of the product or for any loss or damage (other than death or personal injury resulting from our negligence) arising out of such use. The information contained in this sheet is liable to modification from time to time in the light of experience and our policy of continuous product development.

Drying times quoted are average times at 20°C. Film thickness, humidity and shop temperature can all affect drying times.

PPG Industries (UK) Limited.
Auto Refinish
Customer Service and
Sales Group,
Needham Road,
Stowmarket,
Suffolk,
IP14 2AD,
England.
Tel: 01449 771775
Fax: 01449 771547

International Sales
PPG Industries
Auto Refinish International,
Priory Road,
Warwick ,
CV34 4NA,
England.
Tel: +44 1926 403 255
Fax: +44 1926 410 249

PPG Industries

Grafik: Mike Rohde

Copyright by PPG Industries Lacke GmbH on behalf of Lamborghini S.p.A. Autor: Franco Busia

PPG AUTO REFINISH

DELTRON

CONCEPT 2001 HS CLEAR

D880

PRODUCT DESCRIPTION

Deltron Concept 2001 is a premium quality high solids polyurethane clearcoat specifically formulated to give optimum gloss and durability when low-baked.
It is designed to be used over Deltron BC Colour (see Data Sheet EU02).

PREPARATION OF SUBSTRATE

Apply Deltron BC Basecoat Colour over original stoved finishes or over recommended PPG primers (eg Prima, Koba, Universel, 2+1). See Data Sheet EU02 for Deltron BC application details.

Degrease all surfaces to be painted with appropriate PPG substrate cleaner (see selection guide below) before wet flatting with P800-1000 grade paper or dry flatting with P600-800 grade paper.

Wash off residues and dry thoroughly before recleaning with appropriate PPG substrate cleaner (see selection guide below). The use of a tack rag is recommended.

GUIDE TO SELECTION OF SUBSTRATE CLEANER

Code	*Product*	*Purpose*
D845	DX310 High-Strength Degreaser	For use as a pre-cleaner in the first stage of the repair process. Use before starting any repair work.
D837	DX330 Spirit Wipe	Suitable for removing dirt, grease or other contaminants before or during the painting process.
D842	DX380 Low-VOC Cleaner	Particularly designed to remove contaminants after sanding, and in areas where VOC emissions should be minimised.
D846	Degreasing Agent for Plastics	A fast, effective degreaser specially formulated to avoid adverse effects on plastic substrates.

EU42/E
8/92

PPG Industries

Grafik: Mike Rohde

Copyright by PPG Industries Lacke GmbH on behalf of Lamborghini S.p.A. Autor: Franco Busia

APPLICATION GUIDE	CONVENTIONAL SPRAY
Mixing Ratio	D880 2 vols MS Hardener* 1 vol Thinner* 0.5 vol

* *Choose MS Hardener and Thinner according to application temperature:*

	MS Hardener	*Thinner*
Up to 18°C	D803 Fast	D808
18°C - 25°C	D841 Medium	D807
Over 25°C	D861 Slow	D812

For exceptional conditions of temperature and humidity (> 35ºC / >70%) the use of Very Slow Thinner D869 is recommended.

Potlife	3 hours / 20°C
Spray viscosity	17 secs DIN4 / 20°C
Spraygun setup	gravity 1.4 - 1.5 mm suction 1.6 - 1.8 mm
Spray pressure	4 bar
Number of coats	1 light, 1 full
Flash off at 20°C: *between coats* *before stoving*	 10 - 15 minutes 15 minutes

PPG Industries

Copyright by PPG Industries Lacke GmbH on behalf of Lamborghini S.p.A. Autor: Franco Busia

Grafik: Mike Rohde

APPLICATION GUIDE	CONVENTIONAL SPRAY
Drying times:	
dust-free	40 minutes
20°C dry to handle	6 hours
through dry:	
20°C	20 hours
60°C	30 minutes*
IR medium	15 minutes

* *Stoving times are for quoted metal temperature. Additional time should be allowed in the stoving schedule to allow metal to reach recommended temperature.*

Total dry film build:	
minimum	50µm
maximum	60µm
*theoretical coverage***	7 - 7.5 m² / l

** *Theoretical coverage in m^2 per litre ready-to-spray, giving 50 µm dry film thickness*

Flatting:	if over 24 hours
grade wet	P800
grade dry	P500
Overcoat / recoat time	8 hours
Overcoat with	Any PPG 2K primer or Deltron topcoat

PPG Industries

Grafik: Mike Rohde

Copyright by PPG Industries Lacke GmbH on behalf of Lamborghini S.p.A. Autor: Franco Busia

PERFORMANCE AND LIMITATIONS

Allow the Deltron BC Basecoat Colour to flash off for 15 minutes (but no longer than 24 hours) before applying Deltron Concept 2001 Clear. The timing will depend on thickness and temperature.

HEALTH AND SAFETY

- Please refer to Material Safety Data Sheets for full Health and Safety details.
- Deltron Hardeners and mixed Concept 2001 Clear contain isocyanate and therefore particular safety precautions must be taken.
- Goggles must be worn when mixing and using to prevent accidental splashing into the eye. If contact occurs with eyes give prolonged irrigation with water and get medical attention immediately.
- Good ventilation and extraction must be provided in the working environment.
- When spraying this product the operator (and persons in vicinity) must wear suitable air-fed breathing apparatus.
- Do not smoke whilst using this material.

FLASH POINTS

Deltron MS Hardeners	21° - 55°C
Deltron Concept 2001 Clear D880	Below 21°C
Deltron Thinners	Below 21°C
DX310 High-Strength Degreaser D845	Below 21°C
DX330 Spirit Wipe D837	Below 21°C
Degreasing Agent for Plastics D846	Below 21°C
DX380 Low-VOC Cleaner D842	No flash point - water-based

This product is for professional use only. The information given in this sheet is for guidance only. Any person using the product without first making further enquiries as to the suitability of the product for the intended purpose does so at his own risk and we can accept no liability for the performance of the product or for any loss or damage (other than death or personal injury resulting from our negligence) arising out of such use. The information contained in this sheet is liable to modification from time to time in the light of experience and our policy of continuous product development.

Drying times quoted are average times at 20°C. Film thickness, humidity and shop temperature can all affect drying times.

PPG Industries (UK) Ltd,
Rotton Park Street, Ladywood,
Birmingham, B16 0AD, England

Tel: 021 455 9866
Telex: 339266 PPGLAD G
Fax: 021 454 0848

Copyright by PPG Industries Lacke GmbH on behalf of Lamborghini S.p.A. Autor: Franco Busia
Grafik: Mike Rohde

More Product Informations USA / Canada

1. Go to this site:

http://www.ppg.com/cr-refinish/

3. Select Product Informations for your Products

Copyright by PPG Industries Lacke GmbH on behalf of Lamborghini S.p.A. Autor: Franco Busia

More Product Informations other Country

1. Go to this site:

http://www.ppg.com/cr-refinish/

2.

Select Your Country and Your language

3. Select Products and Service

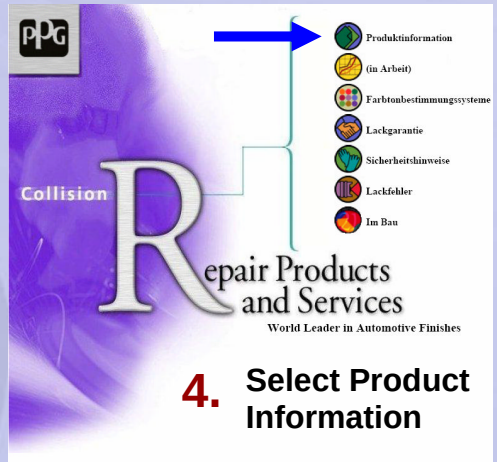

4. Select Product Information

5. Select Product typ, and Technical Data Sheet

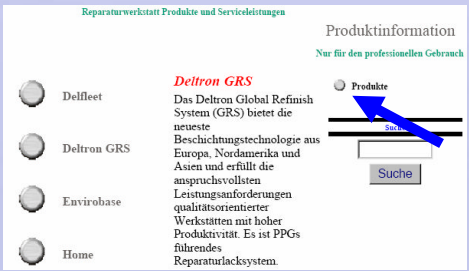

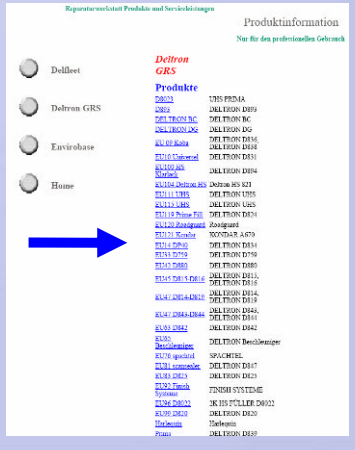

You are ready now!

PPG Industries Lacke GmbH

Diese Folien dürfen nicht ohne Zustimmung der Autoren in irgendeiner Weise verändert oder benutzt werden.

SEE IT'S PPG

PPG Industries Lacke GmbH

Franco Busia, Process Engineer and Technical Consultant
www.ppg.com

Diese Folien dürfen nicht ohne Zustimmung der Autoren in irgendeiner Weise verändert oder benutzt werden.

® Automobili Lamborghini S.p.A.
The information and procedures published below are strictly confidential and exclusively for the Lamborghini Dealer Network and Authorized Service Points. All copyrights are property of Automobili Lamborghini S.p.A based on copyright law. All of the PDF chapters in the WEB workshop manuals described below are based on information available at the time of publication. The company reserves the right to make updates and modifications. The following are prohibited: reprinting, reproduction, forwarding to unauthorized people and/or third parties, and translation, including partial, without written authorization from Automobili Lamborghini S.p.A.

Electrical equipment

Type	A 12V negative to ground
Recharging system	Alternator and voltage regulator
Battery	12V – 90Ah – 420A
Current rate with engine off and switch deactivated	7 ÷ 12 mA
Spark plug type:	NGK IR KR8BI
Spark plugs - Distance between electrodes	0.7 ÷ 0.8

Fig.1

® Automobili Lamborghini S.p.A.
The information and procedures published below are strictly confidential and exclusively for the Lamborghini Dealer Network and Authorized Service Points. All copyrights are property of Automobili Lamborghini S.p.A based on copyright law. All of the PDF chapters in the WEB workshop manuals described below are based on information available at the time of publication. The company reserves the right to make updates and modifications. The following are prohibited: reprinting, reproduction, forwarding to unauthorized people and/or third parties, and translation, including partial, without written authorization from Automobili Lamborghini S.p.A.

Electrical system check

STOP **Check the electrical system (090000) on the car functions correctly on a regular basis.**

In particular, ensure the following devices function:

- Lights: headlamps, number plate lights, brake lights, rear reverse light, interior lights, parking lights and indicator lights.
  In the case of any malfunctions, carry out the necessary procedures (**094102-094103-094303-094503-094703-095303).**

- Interior systems: horn, electric starter, ignition and interference suppression system, electric contacts, central locking, windscreen wipers, car hi-fi system, choke, electric ventilation system, electric windows.
  In the case of any malfunctions, carry out the necessary procedures (**095103-090103-090503-092702-092703-095503-097503-091100-091103)**

- Wiring harnesses and fuses
  In the case of any malfunctions, carry out the necessary procedures (**097303**).

- Battery
  In the case of any malfunctions, carry out the necessary procedures (**091501-091503**).

® Automobili Lamborghini S.p.A.
The information and procedures published below are strictly confidential and exclusively for the Lamborghini Dealer Network and Authorized Service Points. All copyrights are property of Automobili Lamborghini S.p.A based on copyright law. All of the PDF chapters in the WEB workshop manuals described below are based on information available at the time of publication. The company reserves the right to make updates and modifications. The following are prohibited: reprinting, reproduction, forwarding to unauthorized people and/or third parties, and translation, including partial, without written authorization from Automobili Lamborghini S.p.A.

Disassembling the ignition key assembly

Preliminary operations

- Disassemble the steering wheel cover **(087503)**.

Disassembling the ignition key assembly

1. Disconnect the 2 ignition key assembly connections (**A-Fig.1**).
2. Using a hammer and chisel remove the 2 antitheft bolts (**B-Fig.1**) securing the ignition key assembly.

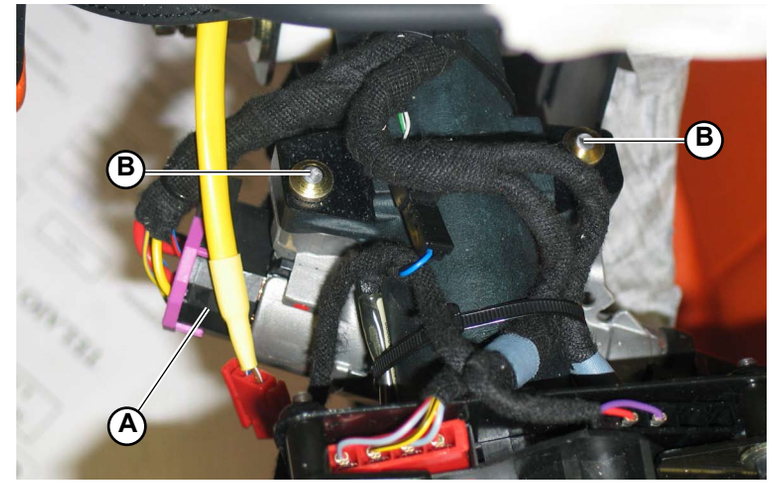

Fig.1

® Automobili Lamborghini S.p.A.
The information and procedures published below are strictly confidential and exclusively for the Lamborghini Dealer Network and Authorized Service Points. All copyrights are property of Automobili Lamborghini S.p.A based on copyright law. All of the PDF chapters in the WEB workshop manuals described below are based on information available at the time of publication. The company reserves the right to make updates and modifications. The following are prohibited: reprinting, reproduction, forwarding to unauthorized people and/or third parties, and translation, including partial, without written authorization from Automobili Lamborghini S.p.A.

Assembling the ignition key assembly

1. Using a 13 mm wrench, install 2 new antitheft bolts (**A-Fig.1**) in the ignition key assembly and tighten until the bolt head snaps off.
2. Connect the 2 ignition key assembly connections (**B-Fig.1**).

- Assemble the steering wheel cover **(087505)**.

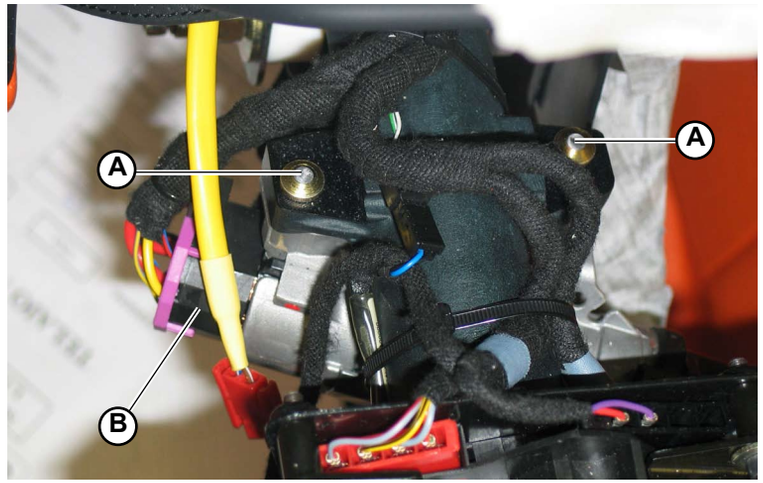

Fig.1

® Automobili Lamborghini S.p.A.
The information and procedures published below are strictly confidential and exclusively for the Lamborghini Dealer Network and Authorized Service Points. All copyrights are property of Automobili Lamborghini S.p.A based on copyright law. All of the PDF chapters in the WEB workshop manuals described below are based on information available at the time of publication. The company reserves the right to make updates and modifications. The following are prohibited: reprinting, reproduction, forwarding to unauthorized people and/or third parties, and translation, including partial, without written authorization from Automobili Lamborghini S.p.A.

Alternator	
Type	BOSCH
Rated voltage	14V
Rated current	180 A at 6,000 rpm
Integral electronic voltage regulator	

® Automobili Lamborghini S.p.A.
The information and procedures published below are strictly confidential and exclusively for the Lamborghini Dealer Network and Authorized Service Points. All copyrights are property of Automobili Lamborghini S.p.A based on copyright law. All of the PDF chapters in the WEB workshop manuals described below are based on information available at the time of publication. The company reserves the right to make updates and modifications. The following are prohibited: reprinting, reproduction, forwarding to unauthorized people and/or third parties, and translation, including partial, without written authorization from Automobili Lamborghini S.p.A.

Alternator check

A pilot lamp on the control panel controls whether the alternator is functioning correctly. The pilot lamp only lights up if there is a malfunction.

However, it is advisable to regularly check the alternator is functioning correctly using the tester:

- **access the alternator (Preliminary operations 090303)**
- **position the tester electrodes between the positive and negative poles while the engine is idling**
- **ensure the alternator is issuing the correct value (090300)**

If the alternator pilot lamp lights up or the tester readings are incorrect, carry out the necessary procedures to repair or replace the alternator **(090303)**.

® Automobili Lamborghini S.p.A.
The information and procedures published below are strictly confidential and exclusively for the Lamborghini Dealer Network and Authorized Service Points. All copyrights are property of Automobili Lamborghini S.p.A based on copyright law. All of the PDF chapters in the WEB workshop manuals described below are based on information available at the time of publication. The company reserves the right to make updates and modifications. The following are prohibited: reprinting, reproduction, forwarding to unauthorized people and/or third parties, and translation, including partial, without written authorization from Automobili Lamborghini S.p.A.

Alternator disassembly

Preliminary operations:

- Disassemble the rear engine hood and the rear compartment (spoiler holder) **(081303)**.
- Disassemble the silencer covers.

Disassembly:

1. Disconnect the alternator wiring harness (**A-Fig.1**).

2. Disconnect the vent pipe (**B-Fig.1**) from the alternator cover after loosening the relative clamp.

3. Remove the auxiliary belt **(010103)**.

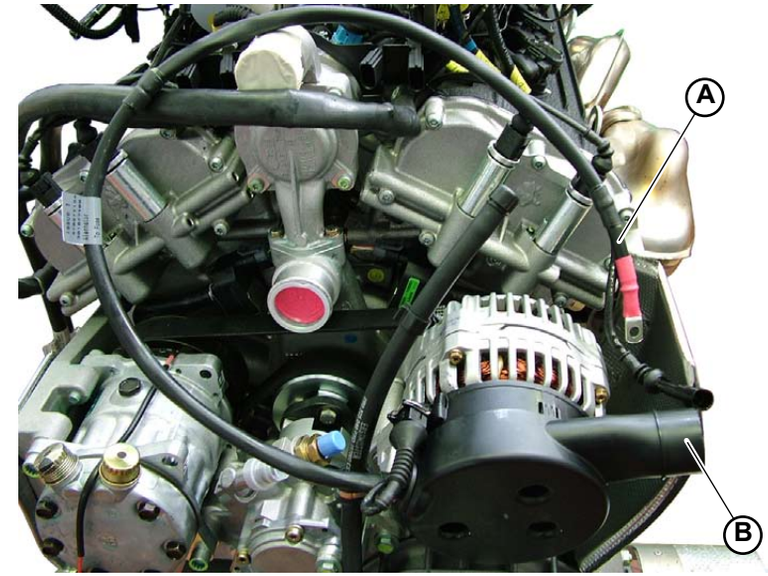

Fig.1

4. Remove the alternator's heat-proof panel (**C-Fig.2**), unscrewing the screw (**D-Fig.2**) and the 2 bolts (**E-Fig.2**).

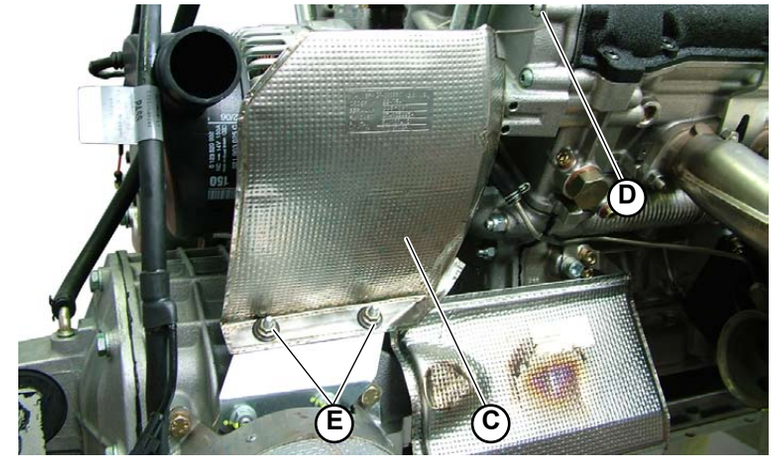

Fig.2

® Automobili Lamborghini S.p.A.
The information and procedures published below are strictly confidential and exclusively for the Lamborghini Dealer Network and Authorized Service Points. All copyrights are property of Automobili Lamborghini S.p.A based on copyright law. All of the PDF chapters in the WEB workshop manuals described below are based on information available at the time of publication. The company reserves the right to make updates and modifications. The following are prohibited: reprinting, reproduction, forwarding to unauthorized people and/or third parties, and translation, including partial, without written authorization from Automobili Lamborghini S.p.A.

5. Remove the screw (**F-Fig.3**), freeing the pipe (**G-Fig.3**).

6. Remove the 2 bolts (**H-Fig.3**) that secure the alternator and remove the alternator.

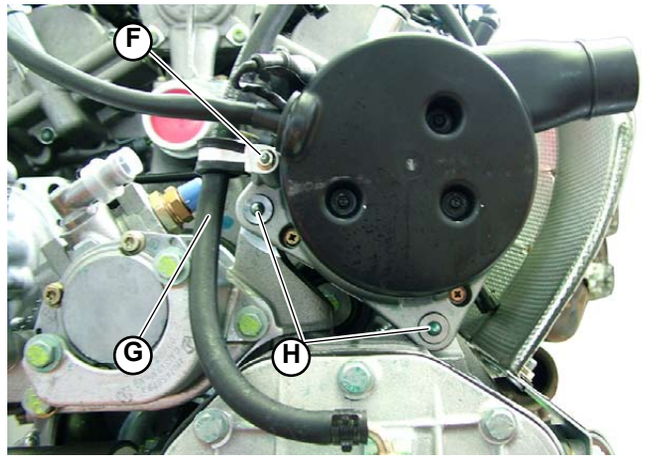

Fig.3

® Automobili Lamborghini S.p.A.
The information and procedures published below are strictly confidential and exclusively for the Lamborghini Dealer Network and Authorized Service Points. All copyrights are property of Automobili Lamborghini S.p.A based on copyright law. All of the PDF chapters in the WEB workshop manuals described below are based on information available at the time of publication. The company reserves the right to make updates and modifications. The following are prohibited: reprinting, reproduction, forwarding to unauthorized people and/or third parties, and translation, including partial, without written authorization from Automobili Lamborghini S.p.A.

Alternator assembly

1. Position the alternator; fix it to the rear differential by means of the bolt (**A-Fig.1**).
2. Position the pipe (**B-Fig.1**) and secure it with the screw (**C-Fig.1**).

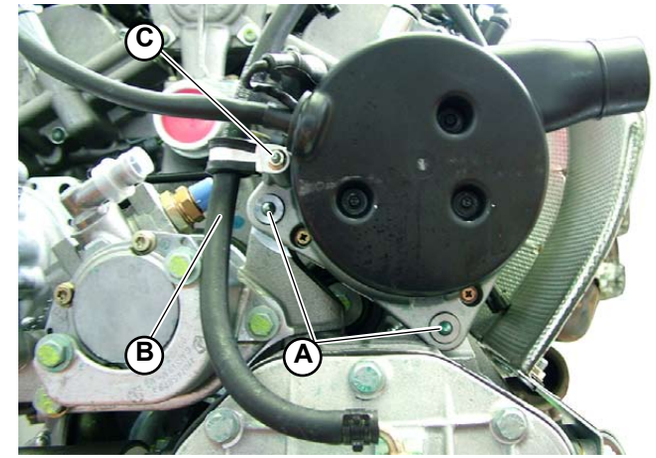

Fig.1

3. Secure the heat-proof panel (**D-Fig.2**), tightening the 2 bolts (**E-Fig.2**) and the screw (**F-Fig.2**).
4. Install the belt slide **(010105)**.

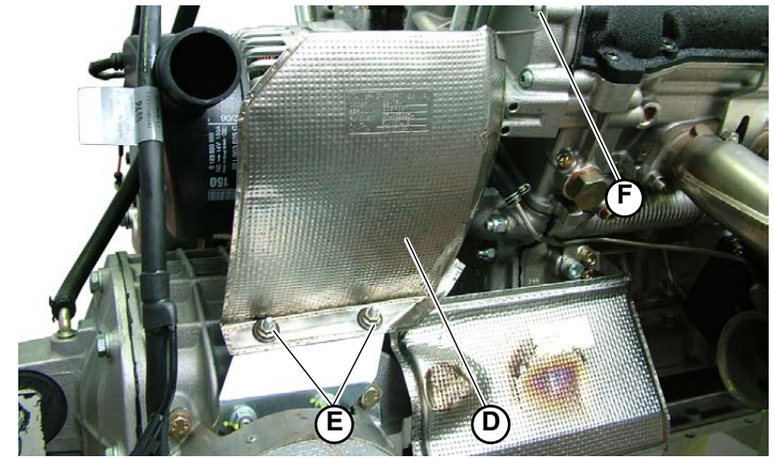

Fig.2

® Automobili Lamborghini S.p.A.
The information and procedures published below are strictly confidential and exclusively for the Lamborghini Dealer Network and Authorized Service Points. All copyrights are property of Automobili Lamborghini S.p.A based on copyright law. All of the PDF chapters in the WEB workshop manuals described below are based on information available at the time of publication. The company reserves the right to make updates and modifications. The following are prohibited: reprinting, reproduction, forwarding to unauthorized people and/or third parties, and translation, including partial, without written authorization from Automobili Lamborghini S.p.A.

5. Reconnect the vent pipe (**G-Fig.3**) to the alternator cover and fix it by means of the clamp.

7. Reconnect the alternator wiring harness (**H-Fig.3**).

- Install the silencer covers.
- Install the engine hood **(081305)**.

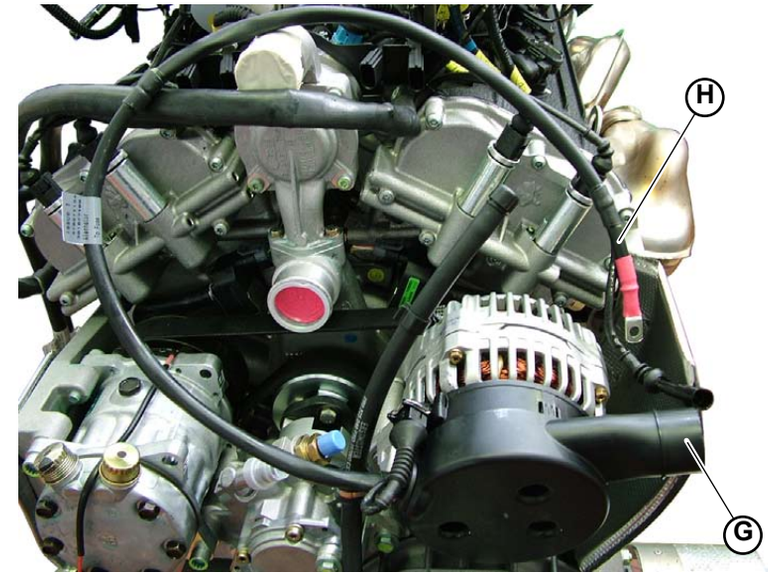

Fig.3

® Automobili Lamborghini S.p.A.
The information and procedures published below are strictly confidential and exclusively for the Lamborghini Dealer Network and Authorized Service Points. All copyrights are property of Automobili Lamborghini S.p.A based on copyright law. All of the PDF chapters in the WEB workshop manuals described below are based on information available at the time of publication. The company reserves the right to make updates and modifications. The following are prohibited: reprinting, reproduction, forwarding to unauthorized people and/or third parties, and translation, including partial, without written authorization from Automobili Lamborghini S.p.A.

Signal Frame Management

The term "signal frame" implies the group of signals coming from the sensor on the crankshaft and each of the sensors on each of the camshafts. Since these signals have a well-defined reciprocal position, altogether they supply the LIE control unit the elements necessary for recognizing engine timing and obtaining the correct ignition and injection sequence.
The same signals are also used by the control unit for operating the phase transformers.

Upon ignition, the control unit acknowledges the injection and ignition timing, which are fundamental for the subsequent operation of all the strategies. This acknowledgement takes place on the basis of the interpretation of the sequence of signals coming from the engine speed sensor (one which serves both systems) on the engine flywheel and from the engine timing sensor on the camshaft.

There is a 36-2-2 toothed phonic wheel on the engine flywheel; the angle between two consecutive teeth is therefore 10°. This wheel is read by an inductive pick-up that generates a sinusoidal wave.

A non-uniform length 4 toothed phonic wheel is splined on each camshaft (4) and read by Hall effect sensors that provide a panel 0-5V signal.

Both the camshaft and flywheel signals and are converted into digital signals by the control unit, using a series of AD converters. Based on these signals, the correct ignition (1-7-4-10-2-8-6-12-3-9-5-11) and injection sequence is carried out. The cam positions and correct control of the phase transformers are also calculated.
The signal provided is of the sinusoidal type, it must be transformed into a digital signal using an A/D converter inside the control unit.

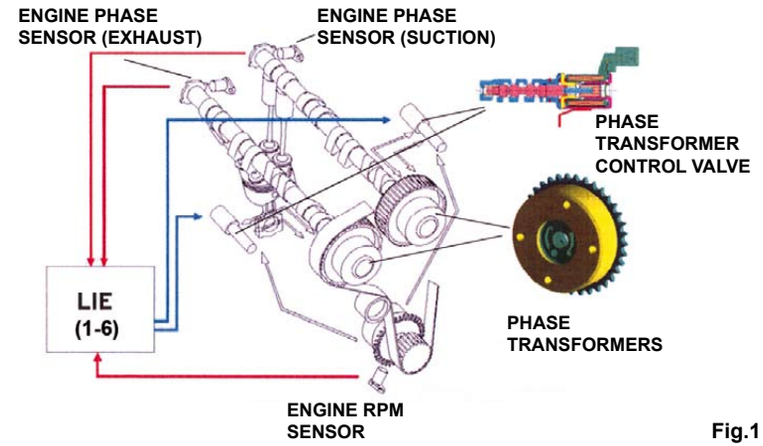

Fig.1

SUCTION

SMOT:	Engine Speed and TDC Sensor Signal
SCAM 1-6:	Cylinder Bank 1-6 Timing Sensor Signal
SCAM 7-12:	Cylinder Bank 7-12 Timing Sensor Signal

EXHAUST

SMOT:	Engine Speed and TDC Sensor Signal
SCAM 1-6:	Cylinder Bank 1-6 Timing Sensor Signal
SCAM 7-12:	Cylinder Bank 7-12 Timing Sensor Signal

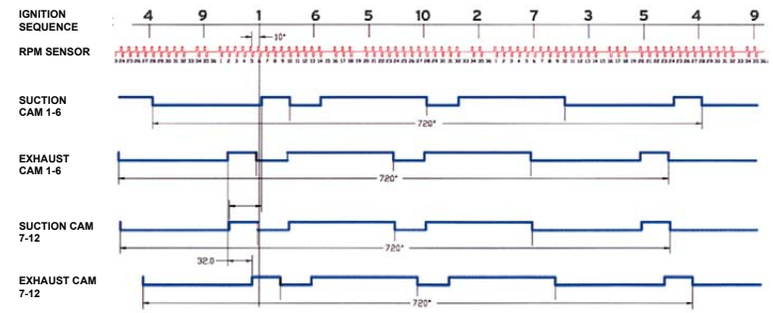

Fig.2

® Automobili Lamborghini S.p.A.
The information and procedures published below are strictly confidential and exclusively for the Lamborghini Dealer Network and Authorized Service Points. All copyrights are property of Automobili Lamborghini S.p.A based on copyright law. All of the PDF chapters in the WEB workshop manuals described below are based on information available at the time of publication. The company reserves the right to make updates and modifications. The following are prohibited: reprinting, reproduction, forwarding to unauthorized people and/or third parties, and translation, including partial, without written authorization from Automobili Lamborghini S.p.A.

Ignition System

The ignition control mainly consists of determining the spark advance required according to the engine operating conditions and its actuation by the piloting of the power transistor incorporated in the power module inside the engine control unit.
The spark advance calculated on the basis of the engine load and speed is then corrected according to different engine operating conditions.
Each coil primary is supplied by the battery voltage through a relay which, in its turn is controlled by the engine control unit: The connection to round takes place through the power transistor.

The engine control unit, after a cylinder TDC signal, sends a signal, with a certain delay, to the relevant power module, that starts at that moment (conduction start moment) to send current to the coil primary circuit to bring the value to about 6 Amperes (saturation current).
Obviously this moment varies in angle in relation to the bursting TDC of each cylinder since the dwell needed to saturate the current in the coil primary circuit is constant, whereas the time required by the engine to make two revolutions (cycle) reduces as the rotation speed increases.
The engine control unit signal remains until the moment of the desired spark advance on the specific cylinder.
The moment the control unit removes the signal from the power module, the current in the coil primary circuit is cut off. This, by induction, generates a sudden rise in voltage on the secondary circuit that is discharged to ground, generating a spark on the ignition spark plug.
Each cylinder has a coil fitted directly onto the spark plug without a high voltage cable.

STOP **The coils are operated when the engine is started in advance by a few cycles with respect to ignition.**
In a similar way, the coils are operated for a few additional cycles after the engine has been stopped.

® Automobili Lamborghini S.p.A.
The information and procedures published below are strictly confidential and exclusively for the Lamborghini Dealer Network and Authorized Service Points. All copyrights are property of Automobili Lamborghini S.p.A based on copyright law. All of the PDF chapters in the WEB workshop manuals described below are based on information available at the time of publication. The company reserves the right to make updates and modifications. The following are prohibited: reprinting, reproduction, forwarding to unauthorized people and/or third parties, and translation, including partial, without written authorization from Automobili Lamborghini S.p.A.

SMOT: Crankshaft Sensor/Signal
a: Spark Advance
A Cylinder Bank 1-6 Module Commands
B Cylinder Bank 1-6 Connection Diagram
B1/../B6: Cylinder (with Power Transistors) Bank 1-6 Coils
Ignition order: 1-4-2-6-3-5

STOP **The cylinder bank 7-12 controls are delayed by 60° of crankshaft in relation to cylinder bank 1-6 controls shown in the figure (Fig.3).**

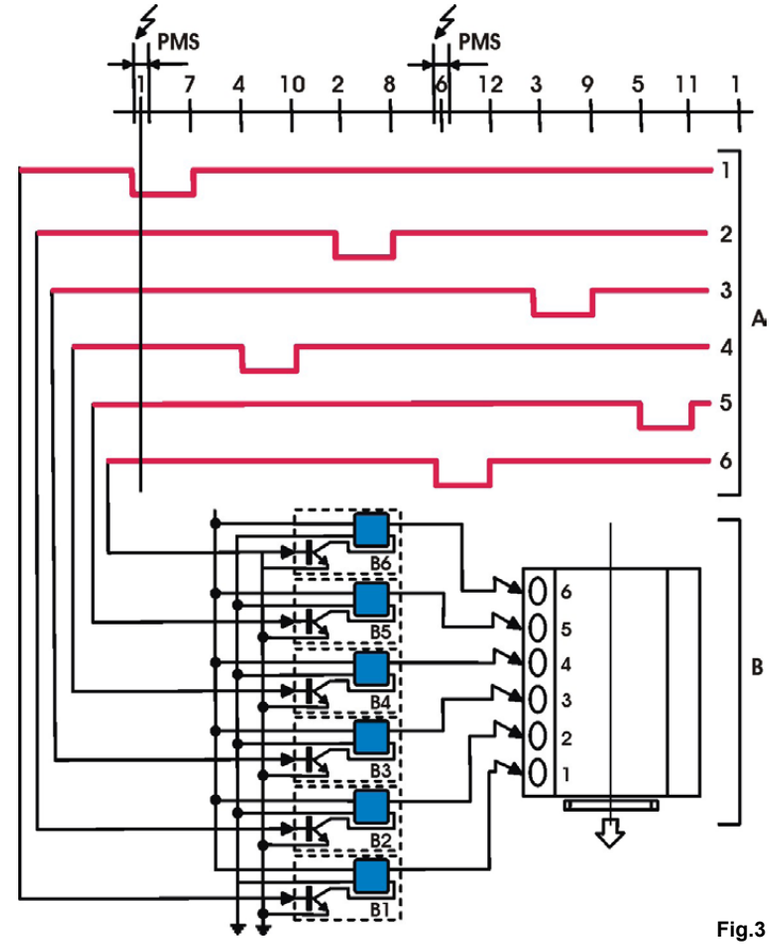

Fig.3

® Automobili Lamborghini S.p.A.
The information and procedures published below are strictly confidential and exclusively for the Lamborghini Dealer Network and Authorized Service Points. All copyrights are property of Automobili Lamborghini S.p.A based on copyright law. All of the PDF chapters in the WEB workshop manuals described below are based on information available at the time of publication. The company reserves the right to make updates and modifications. The following are prohibited: reprinting, reproduction, forwarding to unauthorized people and/or third parties, and translation, including partial, without written authorization from Automobili Lamborghini S.p.A.

Ignition Coil

The ignition circuit is static type with inductive discharge; the high voltage is provided by six pencil coils fitted directly onto the cylinder head for each cylinder bank. The coils have a magnetic closed circuit with the windings in a plastic container immersed in epoxy resin. Each coil is directly connected to the spark plug without high voltage cables.

Pencil ignition coil (Fig.4)	
A.	Ignition switch
B.	Battery
C.	Power supply relay
D.	Pencil coil
E.	Spark plug
F.	Engine control unit

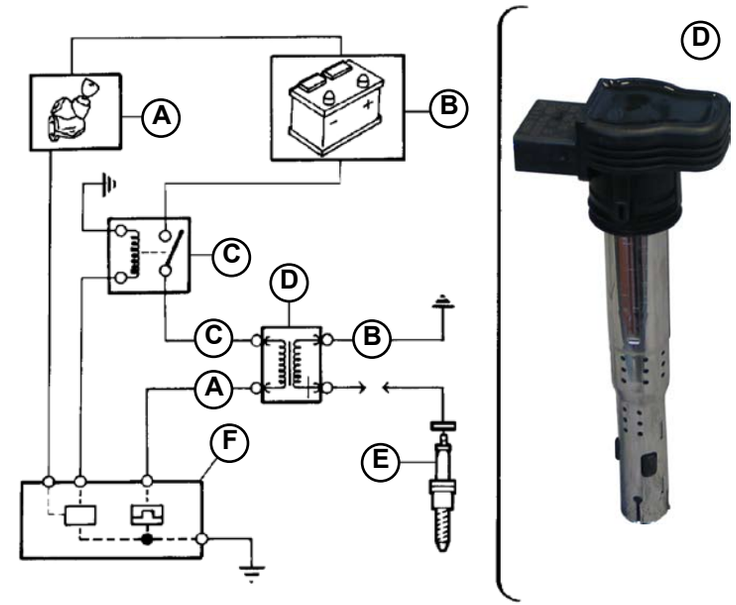

Fig.4

The coil primary circuit is supplied by relay, controlled by the engine control unit after it has acknowledged the SMOT signal coming from the relevant sensor (thus with engine rotating driven by the starter motor).

® Automobili Lamborghini S.p.A.
The information and procedures published below are strictly confidential and exclusively for the Lamborghini Dealer Network and Authorized Service Points. All copyrights are property of Automobili Lamborghini S.p.A based on copyright law. All of the PDF chapters in the WEB workshop manuals described below are based on information available at the time of publication. The company reserves the right to make updates and modifications. The following are prohibited: reprinting, reproduction, forwarding to unauthorized people and/or third parties, and translation, including partial, without written authorization from Automobili Lamborghini S.p.A.

Spark plugs

It is most important to use spark plugs (**Fig.5**) with a thermal degree and specifications corresponding to the standards. If another type of spark plug is used, check it has the same specifications as the original one.

Fig.5

® Automobili Lamborghini S.p.A.
The information and procedures published below are strictly confidential and exclusively for the Lamborghini Dealer Network and Authorized Service Points. All copyrights are property of Automobili Lamborghini S.p.A based on copyright law. All of the PDF chapters in the WEB workshop manuals described below are based on information available at the time of publication. The company reserves the right to make updates and modifications. The following are prohibited: reprinting, reproduction, forwarding to unauthorized people and/or third parties, and translation, including partial, without written authorization from Automobili Lamborghini S.p.A.

Spark plug disassembly

For each spark plug:

1. Remove its coil (**A-Fig.1**).
2. Unscrew the spark plug (**B-Fig.1**) and remove it.
3. Check the spark plug condition and, if necessary, replace it with a new one of the prescribed type; check the distance between the electrodes.

Spark plug type: (090000)

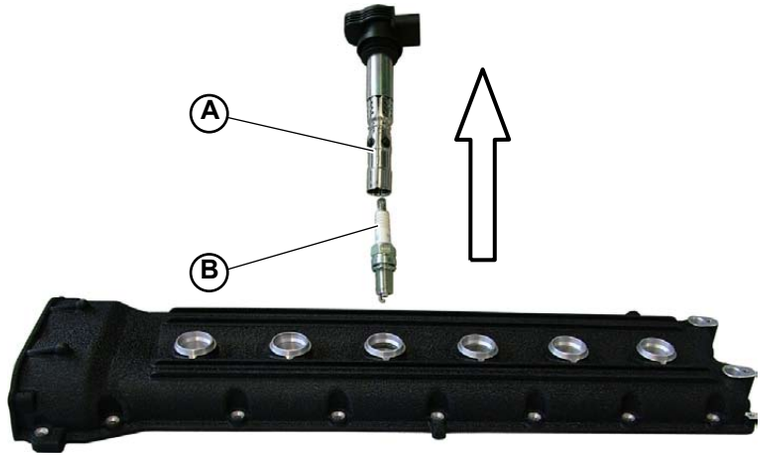

Fig.1

® Automobili Lamborghini S.p.A.
The information and procedures published below are strictly confidential and exclusively for the Lamborghini Dealer Network and Authorized Service Points. All copyrights are property of Automobili Lamborghini S.p.A based on copyright law. All of the PDF chapters in the WEB workshop manuals described below are based on information available at the time of publication. The company reserves the right to make updates and modifications. The following are prohibited: reprinting, reproduction, forwarding to unauthorized people and/or third parties, and translation, including partial, without written authorization from Automobili Lamborghini S.p.A.

Spark plug assembly

For each spark plug:

1. Assemble the spark plug (**B-Fig.1**) on the relative coil and tighten it.
   Spark plug attachment: tightening torque (000800-31b)

Spark plug type: (090000)

2. Check the integrity of the coil.
3. Insert the coil (**A-Fig.1**) and secure it.

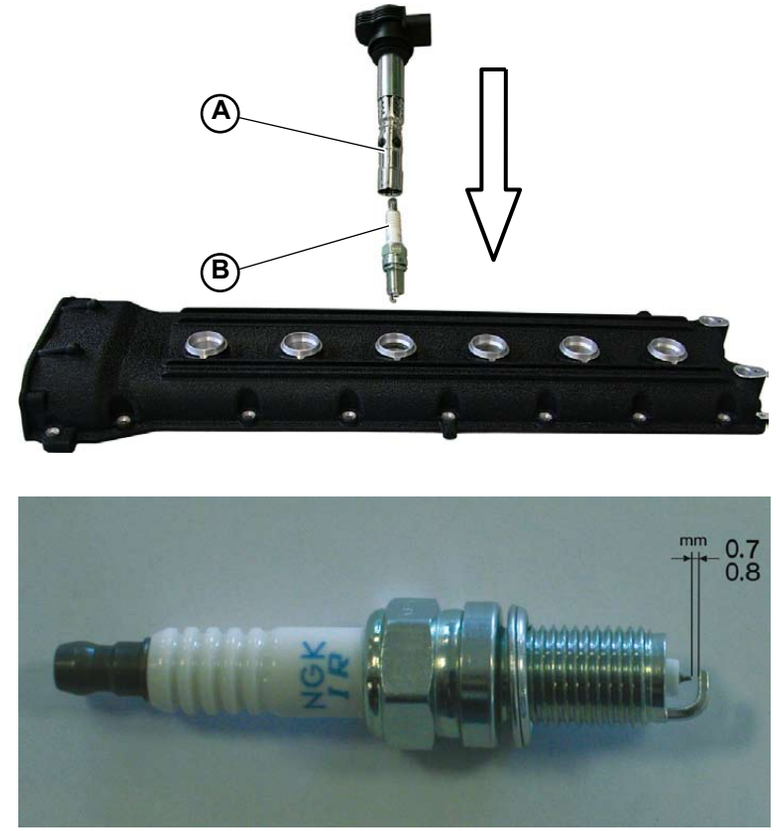

Fig.1

® Automobili Lamborghini S.p.A.
The information and procedures published below are strictly confidential and exclusively for the Lamborghini Dealer Network and Authorized Service Points. All copyrights are property of Automobili Lamborghini S.p.A based on copyright law. All of the PDF chapters in the WEB workshop manuals described below are based on information available at the time of publication. The company reserves the right to make updates and modifications. The following are prohibited: reprinting, reproduction, forwarding to unauthorized people and/or third parties, and translation, including partial, without written authorization from Automobili Lamborghini S.p.A.

LIE

The LIE system is a system that integrates a digital electronic ignition spark advance and static timing system with an electronic indirect fuel injection system of the multiple timed sequential type.
According to the engine structure, which has the cylinders divided into two cylinder banks, two complete systems that are suitably synchronized with each other have been applied, and each controls a cylinder bank of six cylinders. As a consequence there are two engine control units, connected to each other by the CAN line, managing the injection and ignition of each cylinder bank and four throttle bodies connected to each other by CAN lines and electronically controlled by LIE control units through the ETB control units. These control units are also connected by the CAN line to the GFA control unit that co-ordinates and manages many functions especially concerning diagnostic.

The system can be divided into the following sub-systems:
ELECTRICAL/ELECTRONIC SYSTEM
FUEL SUPPLY SYSTEM
INTAKE SYSTEM
THROTTLE BODIES GENERAL DESCRIPTION
EXHAUST SYSTEM
ANTI-EVAPORATION DEVICES

The system can properly acquire the following parameters:
- Engine speed;
- Correct TDC sequence of the cylinders (injection timing);
- Absolute pressure in the intake manifold;
- Throttle position and position variation;
- Accelerator pedal position;
- Intake air temperature;
- Engine coolant temperature;
- Exhaust gas internal temperature;
- Mixture strength;
- Battery voltage;
- Possible start-up of air conditioner;
- Pressure in the exhaust manifold;
- Pressure in the fuel anti-evaporative circuit.

® Automobili Lamborghini S.p.A.
The information and procedures published below are strictly confidential and exclusively for the Lamborghini Dealer Network and Authorized Service Points. All copyrights are property of Automobili Lamborghini S.p.A based on copyright law. All of the PDF chapters in the WEB workshop manuals described below are based on information available at the time of publication. The company reserves the right to make updates and modifications. The following are prohibited: reprinting, reproduction, forwarding to unauthorized people and/or third parties, and translation, including partial, without written authorization from Automobili Lamborghini S.p.A.

Accelerator Pedal Position Sensors (PPS)

The accelerator pedal position sensors are two potentiometers both coaxially installed in the same casing and activated by the accelerator pedal by means of a shaft.
The accelerator pedal angle position is detected by the two coaxial potentiometers: The signal is sent to **LIE control units** and then to **ETB control units** (one per cylinder bank), which in turn control the respective **throttle bodies**.

Accelerator pedal position sensor connection diagram (Fig.1)	
A.	Accelerator pedal position sensors
B.	Cable
C.	ECU (cylinder bank 1-6)
D.	ECU (cylinder bank 7-12)
E.	CAN connection at low speed
F.	Cylinder bank 1-6 throttle bodies
G.	Cylinder bank 7-12 throttle bodies
H.	ETB

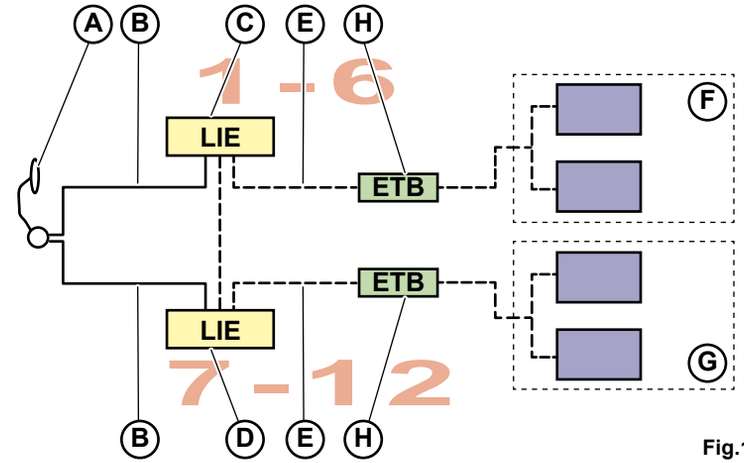

Fig.1

® Automobili Lamborghini S.p.A.
The information and procedures published below are strictly confidential and exclusively for the Lamborghini Dealer Network and Authorized Service Points. All copyrights are property of Automobili Lamborghini S.p.A based on copyright law. All of the PDF chapters in the WEB workshop manuals described below are based on information available at the time of publication. The company reserves the right to make updates and modifications. The following are prohibited: reprinting, reproduction, forwarding to unauthorized people and/or third parties, and translation, including partial, without written authorization from Automobili Lamborghini S.p.A.

T. MAP Absolute Pressure Sensor

The absolute pressure sensors are positioned on left engine cylinder head intake.

Absolute pressure sensor (Fig.2)	
A.	Intake manifold
B.	T. MAP Sensor (air temperature and absolute pressure)

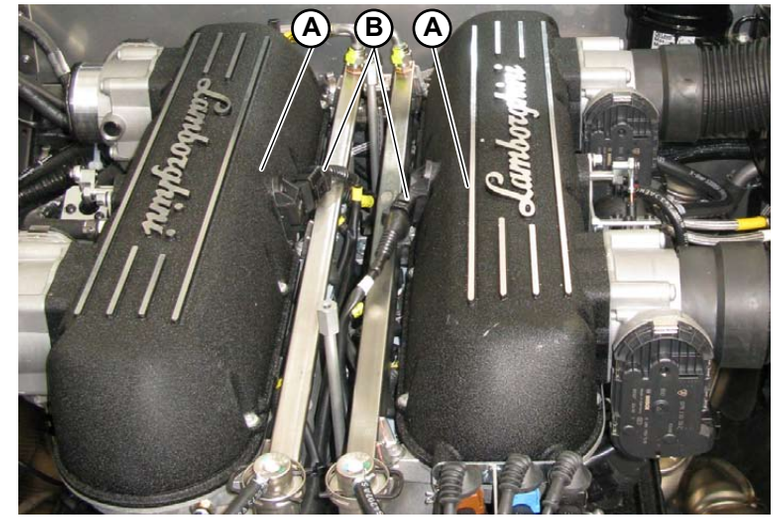

Fig.2

Absolute pressure sensor operating principle

The sensitive element, enclosed in a plastic container, consists of a Wheatstone bridge stenciled on a very thin ceramic plate (diaphragm) installed on the lower part of an annular support.

The diaphragm separates two chambers: In the lower chamber, which is sealed, a vacuum has been created, whereas the upper chamber is in direct communication through piping with the measuring point.
When operating, the pressure that generates on the measuring point produces a mechanical action on the sensor diaphragm which deflects, thus varying the resistor values.

Since the power supply is constant (+5 V), the resistor variation causes an output voltage variation (**V-Fig.3**) which is proportional to the pressure value.

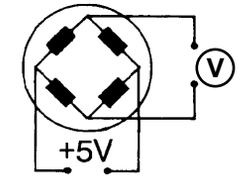

Fig.3

® Automobili Lamborghini S.p.A.
The information and procedures published below are strictly confidential and exclusively for the Lamborghini Dealer Network and Authorized Service Points. All copyrights are property of Automobili Lamborghini S.p.A based on copyright law. All of the PDF chapters in the WEB workshop manuals described below are based on information available at the time of publication. The company reserves the right to make updates and modifications. The following are prohibited: reprinting, reproduction, forwarding to unauthorized people and/or third parties, and translation, including partial, without written authorization from Automobili Lamborghini S.p.A.

Intake Air Temperature Sensor

The sensor is installed on the intake manifold (T.MAP).

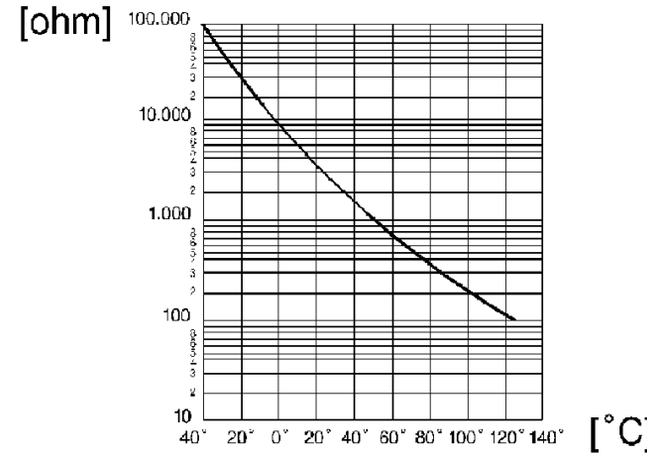

Fig.4

Operating Principle

The reference voltage is 5 Volts: Since the control unit input circuit has been designed as a voltage divider, the reference voltage is divided between a resistor in the control unit and the sensor itself.
As a result, the control unit is able to assess the sensor resistance variations through the voltage changes, thus receiving information on the temperature.

The air temperature sensor is incorporated with the absolute pressure sensor: a single sensor with two functions.

® Automobili Lamborghini S.p.A.
The information and procedures published below are strictly confidential and exclusively for the Lamborghini Dealer Network and Authorized Service Points. All copyrights are property of Automobili Lamborghini S.p.A based on copyright law. All of the PDF chapters in the WEB workshop manuals described below are based on information available at the time of publication. The company reserves the right to make updates and modifications. The following are prohibited: reprinting, reproduction, forwarding to unauthorized people and/or third parties, and translation, including partial, without written authorization from Automobili Lamborghini S.p.A.

Engine Coolant Temperature Sensor

The sensor (one on each cylinder bank) is installed on the coolant collecting body (**Fig.5**) from heads, just behind the thermostat.

It has a brass body that protects the actual resistive element, which consists of an NTC thermistor (Negative Temperature Coefficient) in which the electrical resistance decreases as there is an increase in temperature and of the relevant connector.

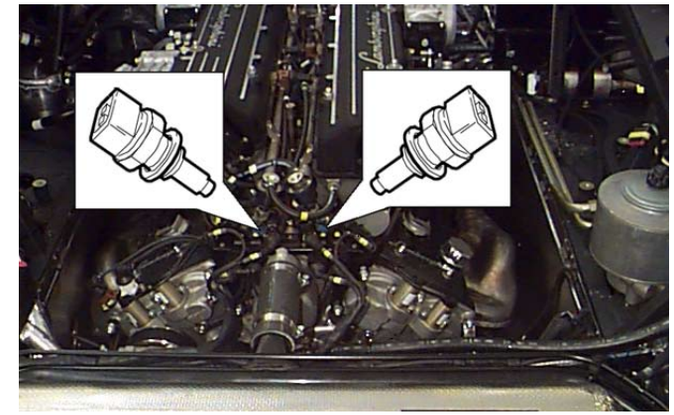

Fig.5

Operating Principle

The reference voltage is 5 Volts: Since the control unit input circuit has been designed as a voltage divider, the reference voltage is divided between a resistor in the control unit and the sensor itself.
As a result, the control unit is able to assess the sensor resistance variations through the voltage changes, thus receiving information on the temperature.

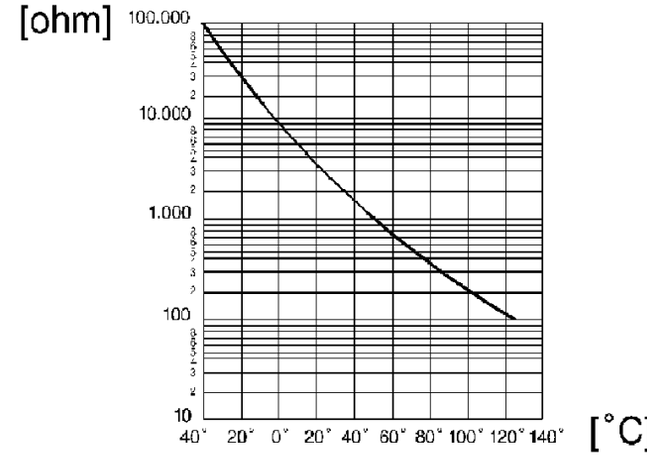

Fig.6

® Automobili Lamborghini S.p.A.
The information and procedures published below are strictly confidential and exclusively for the Lamborghini Dealer Network and Authorized Service Points. All copyrights are property of Automobili Lamborghini S.p.A based on copyright law. All of the PDF chapters in the WEB workshop manuals described below are based on information available at the time of publication. The company reserves the right to make updates and modifications. The following are prohibited: reprinting, reproduction, forwarding to unauthorized people and/or third parties, and translation, including partial, without written authorization from Automobili Lamborghini S.p.A.

Starter

Type	BOSCH
Rated voltage	12V
Rated power	2.2 kW
Current rate with load	60A
Current rate with no load	10A

STOP **For information concerning the control units layout, pin-out, electrical connections and electrical drawings see Electrical Drawings.**

® Automobili Lamborghini S.p.A.
The information and procedures published below are strictly confidential and exclusively for the Lamborghini Dealer Network and Authorized Service Points. All copyrights are property of Automobili Lamborghini S.p.A based on copyright law. All of the PDF chapters in the WEB workshop manuals described below are based on information available at the time of publication. The company reserves the right to make updates and modifications. The following are prohibited: reprinting, reproduction, forwarding to unauthorized people and/or third parties, and translation, including partial, without written authorization from Automobili Lamborghini S.p.A.

Starter disassembly

Preliminary operations

- Remove the engine **(010003)**

Starter disassembly

1. Unscrew the nuts with washers (**A-Fig.1**) which mount the starter to the crankcase.
2. Extract the starter (**B-Fig.1**).

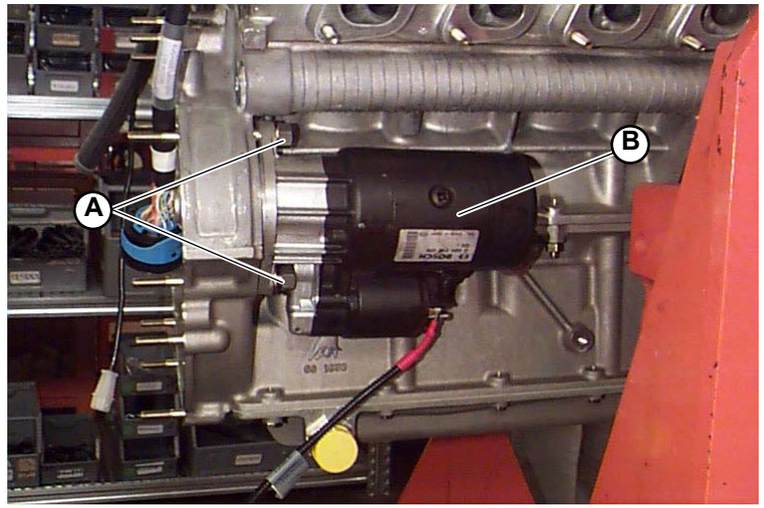

Fig.1

® Automobili Lamborghini S.p.A.
The information and procedures published below are strictly confidential and exclusively for the Lamborghini Dealer Network and Authorized Service Points. All copyrights are property of Automobili Lamborghini S.p.A based on copyright law. All of the PDF chapters in the WEB workshop manuals described below are based on information available at the time of publication. The company reserves the right to make updates and modifications. The following are prohibited: reprinting, reproduction, forwarding to unauthorized people and/or third parties, and translation, including partial, without written authorization from Automobili Lamborghini S.p.A.

Starter assemble

Check the starter conditions and in particular:
- the pinion clearance and smoothness on the journal; apply oil if necessary;
- the conditions (cracks and fissures) of electrical cable insulation devices.

1. Install new spring washers and tighten the nuts (**A-Fig.1**);
   Nut tightening: **tightening torque (000800-2b)**

Do not use grease on the pinion journal.

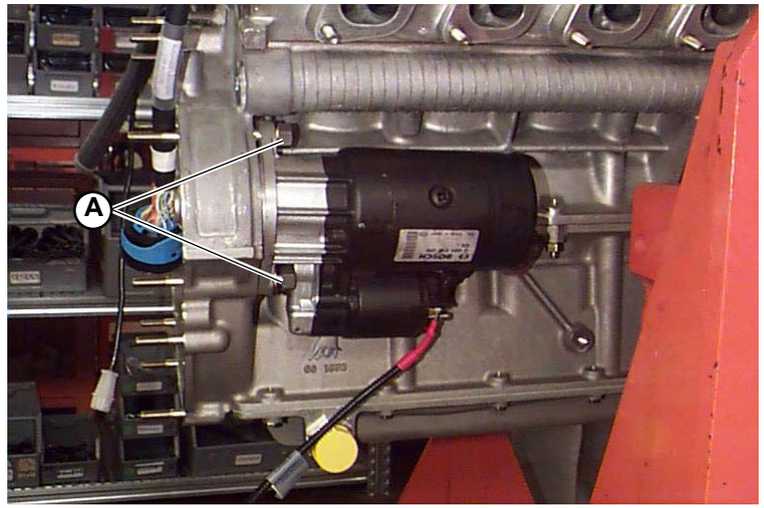

Fig.1

® Automobili Lamborghini S.p.A.
The information and procedures published below are strictly confidential and exclusively for the Lamborghini Dealer Network and Authorized Service Points. All copyrights are property of Automobili Lamborghini S.p.A based on copyright law. All of the PDF chapters in the WEB workshop manuals described below are based on information available at the time of publication. The company reserves the right to make updates and modifications. The following are prohibited: reprinting, reproduction, forwarding to unauthorized people and/or third parties, and translation, including partial, without written authorization from Automobili Lamborghini S.p.A.

Battery

The battery contains highly toxic, corrosive, and explosive substances. During charging and maintenance operations, check that open flames, sparks, and hot parts are not nearby and that the room is well-ventilated. If leaks are found, dispose of it according to current rules of law, handling it with personal anti-corrosion protection devices.
The battery is one of the most important electrical components of modern cars. A battery without maintenance problems greatly affects customer satisfaction. To guarantee long lifetime without maintenance problems, check, adjust, and store the batteries as stated in the present manual.
In addition to starting the engine, the battery also has other jobs. It acts as a buffer and supplies complementary electric energy to the vehicle's electrical system. Furthermore, the cyclical and capacity requirements of the battery are continuously increasing due to the installation of further safety and comfort elements (that consume electricity).
Over the years, car batteries have changed a lot technically and the optimization and development of new technologies for batteries continue. Nevertheless, due to physical and chemical limitations, normal lead acid car batteries still cannot be considered completely maintenance-free.

Warnings and safety measures regarding lead acid batteries

During the maintenance of batteries technical personnel must be aware of and observe the safety measures and warnings contained in the present repair manual.

Illustrative notes on the WARNING symbols applied on the batteries:

1. Follow the instructions indicated on the batteries themselves, in the present repair manual, and in the user manual.
2. The acid contained in the batteries (electrolyte) can cause serious burns.
3. Avoid open flames and sparks and DO NOT smoke near the batteries.
4. Always wear protective goggles while working with the electrolyte.
5. Keep the acid and the batteries away from children.
6. Disposal: Observe the rules on the disposal of batteries and sulphuric acid. Always use special containers for disposal at authorized centers.
7. Do not throw away used batteries in normal garbage dumps for solid urban waste. The batteries contain lead (Pb), which is toxic.
8. Danger of explosion! Batteries being charged emit a mixture of explosive gases.

® Automobili Lamborghini S.p.A.
The information and procedures published below are strictly confidential and exclusively for the Lamborghini Dealer Network and Authorized Service Points. All copyrights are property of Automobili Lamborghini S.p.A based on copyright law. All of the PDF chapters in the WEB workshop manuals described below are based on information available at the time of publication. The company reserves the right to make updates and modifications. The following are prohibited: reprinting, reproduction, forwarding to unauthorized people and/or third parties, and translation, including partial, without written authorization from Automobili Lamborghini S.p.A.

WARNING!

- **Contact with the electrolyte without taking precautions causes serious burns to skin, eyes, and mucous membranes.**
- **The electrolyte's gases cause burns to the respiratory system.**
- **Ingestion of the electrolyte causes burns to the digestive system.**
- **FIRST AID: In the case of contact of the electrolyte with the eyes or skin, immediately and thoroughly wash with water. Remove clothing contaminated by the electrolyte and wash with water.**
- **Never overturn the batteries. The electrolyte could leak from the vents.**
- **If the electrolyte leaks onto the painted surface of a vehicle or the ground, clean with absorbent material (subsequently thrown away properly). Remove every residual trace of electrolyte using a mixture of baking soda and water.**
- **Do not touch the electrolyte with bare hands. Avoid contact with the skin.**
- **Never touch mouth, nose, or eyes after maintenance operations on batteries. Thoroughly wash hands before taking a break (to eat, etc.) and after every maintenance operation on the battery.**
- **Do not keep food or drinks in the battery's maintenance area.**
- **Avoid open flames and sparks and DO NOT smoke near the batteries.**
- **Smoking and open flames are prohibited while working near batteries.**
- **Avoid sparks while working with wires, connectors, and electrical components as well as maintenance instruments and equipment.**
- **In the case of removal for maintenance, always reinstall the battery by positioning the positive (B+) and negative (-) terminal caps correctly.**
- **Safety goggles and protective clothing:**
  When working on the electrolyte always wear safety goggles, rubber gloves, and protective clothing (aprons).
- **Batteries produce explosive gases during charging.**
- **Avoid open flames and sparks and DO NOT smoke near the batteries.**
- **Use an antistatic spray on the battery before handling it.**
- **DO NOT remove the battery's caps during charging.**
- **The battery charger MUST be off when connecting and disconnecting the battery cables.**
- **Charge the battery in sufficiently ventilated environments and, once charged, let it sit for a while.**
- **Transport batteries in conductive metal containers only.**
- **Materials subject to generation of energy and conduction.**

® Automobili Lamborghini S.p.A.
The information and procedures published below are strictly confidential and exclusively for the Lamborghini Dealer Network and Authorized Service Points. All copyrights are property of Automobili Lamborghini S.p.A based on copyright law. All of the PDF chapters in the WEB workshop manuals described below are based on information available at the time of publication. The company reserves the right to make updates and modifications. The following are prohibited: reprinting, reproduction, forwarding to unauthorized people and/or third parties, and translation, including partial, without written authorization from Automobili Lamborghini S.p.A.

STOP

Never attempt to jump start a car with a frozen battery; it could break and cause further damage.
Never use fast battery chargers for emergency starts.
Failure to observe the procedures described below can lead to injury or damage due to spillage of battery acid or overloading of the vehicle electrical system.
Never disconnect the system battery when the engine is running.
Do not start up the engine before connecting the battery.

- Do not use fast chargers to start the engine. Use either separate batteries or the special auxiliary battery to start the engine;
- Check carefully exact polarity of the battery terminals when starting up with an auxiliary battery;
- Always disconnect the ground cable first from the battery negative terminal when disconnecting the battery from the system;
- Before connecting the battery to the system make sure that the latter is well insulated;
- Disconnect the system battery when recharging with external equipment;
- Disconnect the external recharging equipment from the network before removing its clamps from the battery terminals;
- Wrong polarization of the electronic control units power supply voltage (for example battery wrong polarization) can cause breakage.

® Automobili Lamborghini S.p.A.
The information and procedures published below are strictly confidential and exclusively for the Lamborghini Dealer Network and Authorized Service Points. All copyrights are property of Automobili Lamborghini S.p.A based on copyright law. All of the PDF chapters in the WEB workshop manuals described below are based on information available at the time of publication. The company reserves the right to make updates and modifications. The following are prohibited: reprinting, reproduction, forwarding to unauthorized people and/or third parties, and translation, including partial, without written authorization from Automobili Lamborghini S.p.A.

In case of engine starting by means of external battery, make sure that the external battery has an equivalent voltage (12 V) and that the connecting electrical cables have a section corresponding to 25 mm^2 at least.
The point shown in the figure (**Fig.1**) and any engine ground point can be used to connect an external battery charger.

Proceed as follows:

- remove the ignition key;
- switch off all lights and any other electrical device in the car;
- connect the emergency battery positive terminal to the point (**+**) shown in the figure (**Fig.1**) by means of the cable;
- connect the emergency battery negative terminal to any engine ground point;
- turn the ignition key to position 1;
- select the maximum temperature on the air conditioning system control panel;
- start up the engine then disconnect the emergency battery removing first the connection to ground then the positive terminal.

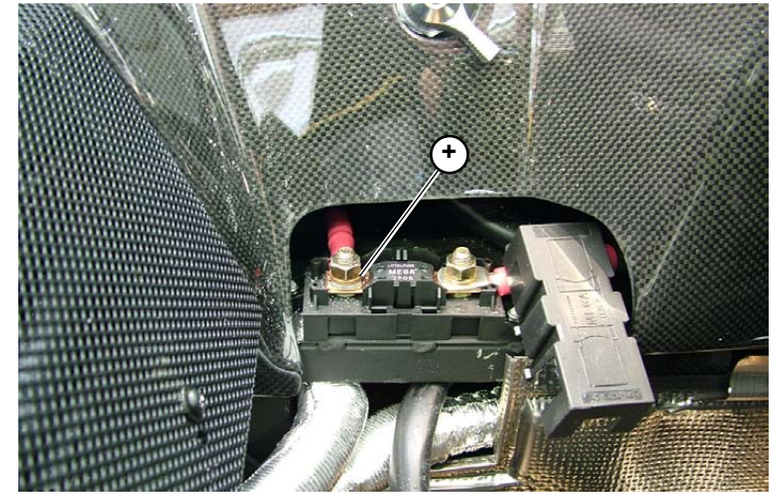

Fig.1

STOP **While connecting the battery's positive pole (+) be very careful NOT to touch the carbon bulkhead:**
<u>Irreparable damage could be caused to the vehicle's control units</u>.

® Automobili Lamborghini S.p.A.
The information and procedures published below are strictly confidential and exclusively for the Lamborghini Dealer Network and Authorized Service Points. All copyrights are property of Automobili Lamborghini S.p.A based on copyright law. All of the PDF chapters in the WEB workshop manuals described below are based on information available at the time of publication. The company reserves the right to make updates and modifications. The following are prohibited: reprinting, reproduction, forwarding to unauthorized people and/or third parties, and translation, including partial, without written authorization from Automobili Lamborghini S.p.A.

Checking the battery

1. Battery power supply greater than 11 Volt.
- The battery does not need recharging or replacement.

2. Battery power supply between 8 and 11 Volt.
- The battery needs to be recharged.

3. Battery power supply less than 8 Volt.
- Replace the battery

® Automobili Lamborghini S.p.A.
The information and procedures published below are strictly confidential and exclusively for the Lamborghini Dealer Network and Authorized Service Points. All copyrights are property of Automobili Lamborghini S.p.A based on copyright law. All of the PDF chapters in the WEB workshop manuals described below are based on information available at the time of publication. The company reserves the right to make updates and modifications. The following are prohibited: reprinting, reproduction, forwarding to unauthorized people and/or third parties, and translation, including partial, without written authorization from Automobili Lamborghini S.p.A.

Disassembling the battery

Preliminary operations

- Remove the rear left wheel **(060103)**.
- Remove the front element of the rear left wheel arch **(082103)**.

Disassembling the battery

1. Detach the battery from inside the rear hood by unscrewing the locking device (**A-Fig.1**).

Fig.1

2. Detach the battery fixing bracket by unscrewing the central screw.
3. Extract the battery (**B-Fig.2**).

Fig.2

® Automobili Lamborghini S.p.A.
The information and procedures published below are strictly confidential and exclusively for the Lamborghini Dealer Network and Authorized Service Points. All copyrights are property of Automobili Lamborghini S.p.A based on copyright law. All of the PDF chapters in the WEB workshop manuals described below are based on information available at the time of publication. The company reserves the right to make updates and modifications. The following are prohibited: reprinting, reproduction, forwarding to unauthorized people and/or third parties, and translation, including partial, without written authorization from Automobili Lamborghini S.p.A.

Assembling the battery

1. Insert the battery (**A-Fig.1**) in the guide. Lock into position using the bracket and fixing screw.

Fig.1

2. Connect the battery from inside the rear hood by tightening the locking device (**B-Fig.2**).

- Assemble the front element of the rear left wheel arch **(082105)**.
- Assemble the rear left wheel **(060105)**.

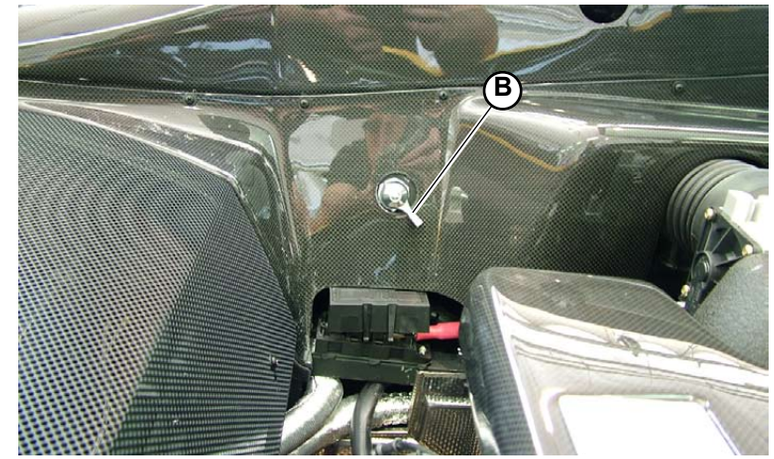

Fig.2

® Automobili Lamborghini S.p.A.
The information and procedures published below are strictly confidential and exclusively for the Lamborghini Dealer Network and Authorized Service Points. All copyrights are property of Automobili Lamborghini S.p.A based on copyright law. All of the PDF chapters in the WEB workshop manuals described below are based on information available at the time of publication. The company reserves the right to make updates and modifications. The following are prohibited: reprinting, reproduction, forwarding to unauthorized people and/or third parties, and translation, including partial, without written authorization from Automobili Lamborghini S.p.A.

USA
CANADA

Front side marker disassembly

These indicators are installed on the front fender at the rear side and can be accessed through a bulkhead in the front wheel stone-guard (**Fig.1**).

Fig.1

Preliminary operations

- Turn the wheel in order to access the stone-guard bulkhead at the front side marker.
- Remove the stone-guard bulkhead **(082103)**.

Indicator disassembly

1. Remove the side turn signal rear guard.

2. Replace the bulb.

® Automobili Lamborghini S.p.A.
The information and procedures published below are strictly confidential and exclusively for the Lamborghini Dealer Network and Authorized Service Points. All copyrights are property of Automobili Lamborghini S.p.A based on copyright law. All of the PDF chapters in the WEB workshop manuals described below are based on information available at the time of publication. The company reserves the right to make updates and modifications. The following are prohibited: reprinting, reproduction, forwarding to unauthorized people and/or third parties, and translation, including partial, without written authorization from Automobili Lamborghini S.p.A.

USA
CANADA

Front side marker assembly

1. Replace the bulb.
2. Secure the turn signal's rear guard.

- Secure the stone-guard bulkhead **(082105)**.

Fig.1

® Automobili Lamborghini S.p.A.
The information and procedures published below are strictly confidential and exclusively for the Lamborghini Dealer Network and Authorized Service Points. All copyrights are property of Automobili Lamborghini S.p.A based on copyright law. All of the PDF chapters in the WEB workshop manuals described below are based on information available at the time of publication. The company reserves the right to make updates and modifications. The following are prohibited: reprinting, reproduction, forwarding to unauthorized people and/or third parties, and translation, including partial, without written authorization from Automobili Lamborghini S.p.A.

USA
CANADA

Rear side marker disassembly

- Disassemble the rear grille to make the side guard accessible.
- Replace the bulb (**A-Fig.1**).

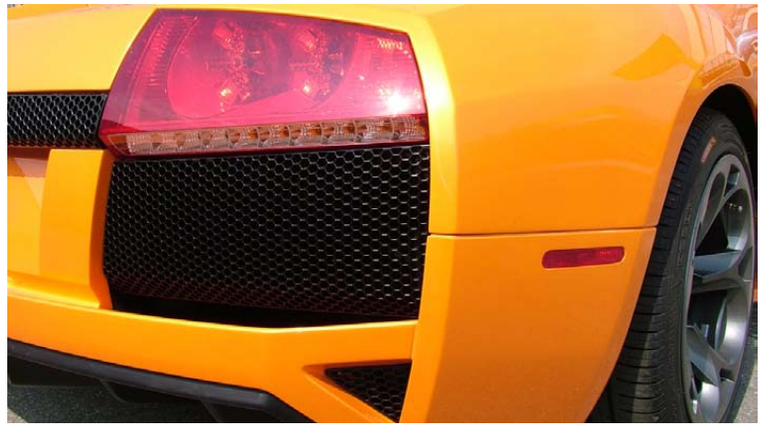

Fig.1

® Automobili Lamborghini S.p.A.
The information and procedures published below are strictly confidential and exclusively for the Lamborghini Dealer Network and Authorized Service Points. All copyrights are property of Automobili Lamborghini S.p.A based on copyright law. All of the PDF chapters in the WEB workshop manuals described below are based on information available at the time of publication. The company reserves the right to make updates and modifications. The following are prohibited: reprinting, reproduction, forwarding to unauthorized people and/or third parties, and translation, including partial, without written authorization from Automobili Lamborghini S.p.A.

USA
CANADA

Rear side marker assembly

- Access the side guard and assemble the bulb (**A-Fig.1**).
- Reassemble the rear grille.

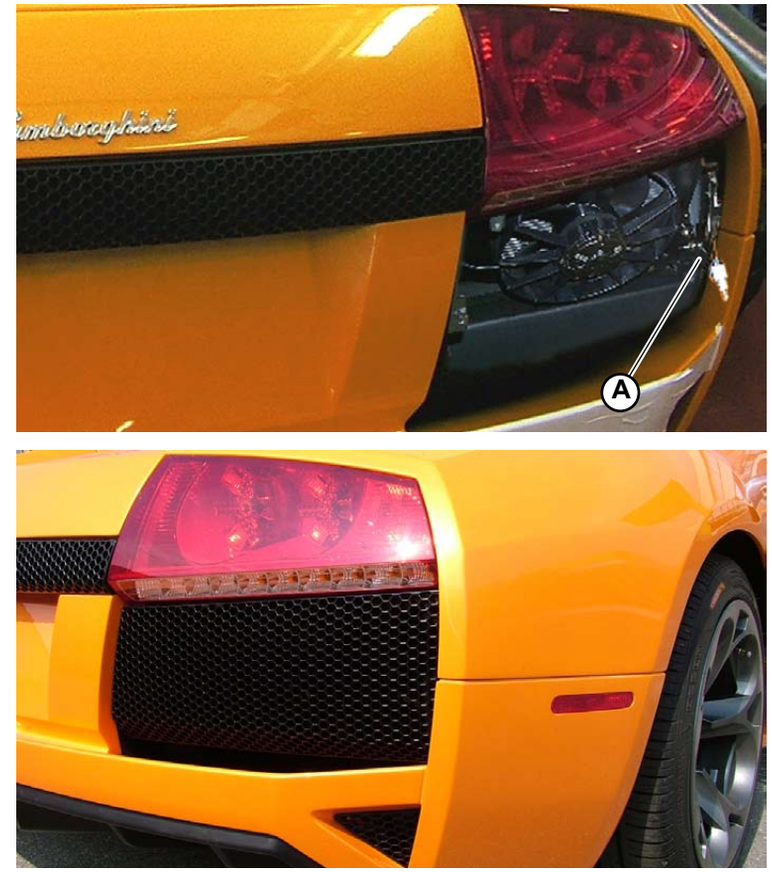

Fig.1

® Automobili Lamborghini S.p.A.
The information and procedures published below are strictly confidential and exclusively for the Lamborghini Dealer Network and Authorized Service Points. All copyrights are property of Automobili Lamborghini S.p.A based on copyright law. All of the PDF chapters in the WEB workshop manuals described below are based on information available at the time of publication. The company reserves the right to make updates and modifications. The following are prohibited: reprinting, reproduction, forwarding to unauthorized people and/or third parties, and translation, including partial, without written authorization from Automobili Lamborghini S.p.A.

Brake pedal SWITCH adjustment

When the switch has been removed **(092703)**, it is possible to increase or decrease the number of trips made by the piston (**A-Fig.1**) (to get the lights to switch on earlier, increase the piston trips by pulling it outwards from the switch; vice versa, to delay the lights switching on, reduce the piston trips by pressing it inwards towards the switch).

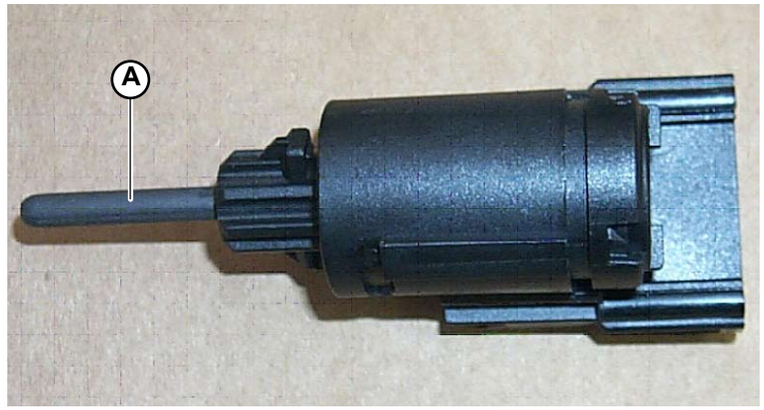

Fig.1

® Automobili Lamborghini S.p.A.
The information and procedures published below are strictly confidential and exclusively for the Lamborghini Dealer Network and Authorized Service Points. All copyrights are property of Automobili Lamborghini S.p.A based on copyright law. All of the PDF chapters in the WEB workshop manuals described below are based on information available at the time of publication. The company reserves the right to make updates and modifications. The following are prohibited: reprinting, reproduction, forwarding to unauthorized people and/or third parties, and translation, including partial, without written authorization from Automobili Lamborghini S.p.A.

Brake pedal SWITCH disassembly

Preliminary operations

- Remove the plastic covers on the pedals.

Switch disassembly

1. Disconnect the switch connector (**A-Fig.1**).

2. Turn the switch anticlockwise and extract.

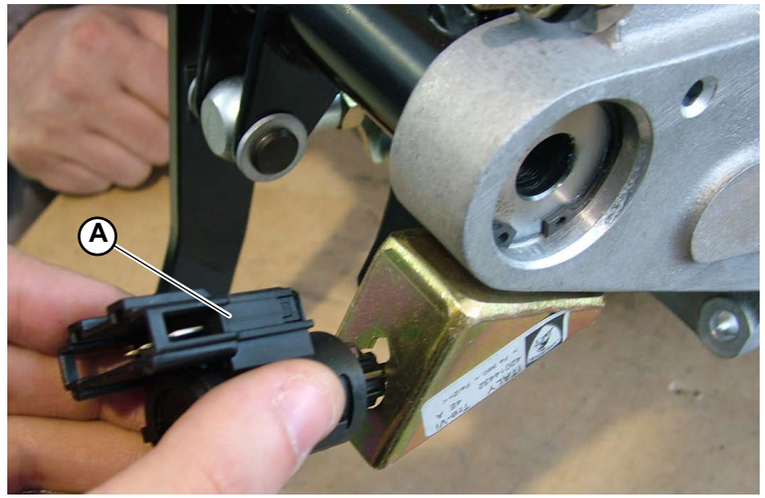

Fig.1

® Automobili Lamborghini S.p.A.
The information and procedures published below are strictly confidential and exclusively for the Lamborghini Dealer Network and Authorized Service Points. All copyrights are property of Automobili Lamborghini S.p.A based on copyright law. All of the PDF chapters in the WEB workshop manuals described below are based on information available at the time of publication. The company reserves the right to make updates and modifications. The following are prohibited: reprinting, reproduction, forwarding to unauthorized people and/or third parties, and translation, including partial, without written authorization from Automobili Lamborghini S.p.A.

Brake pedal SWITCH assembly

1. Pull the switch shaft (**A-Fig.1**) outwards as far as it will go.
2. Insert the switch in the housing on the pedal cluster (cusp-shaped part of the point upwards (**B-Fig.2**), flat part of the point downwards (**C-Fig.2**).
3. Turn the switch clockwise to secure (2 clicks).
4. Connect the connector to the switch (**D-Fig.1**).
5. Carry out the switch adjustment procedure **(092702)**.

- Assemble the plastic covers on the pedals.

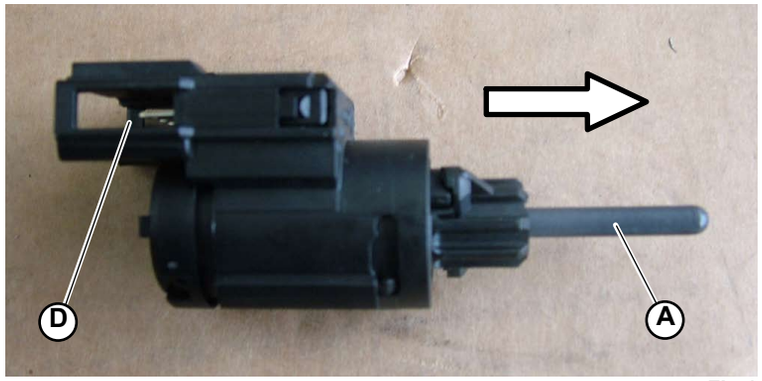

Fig.1

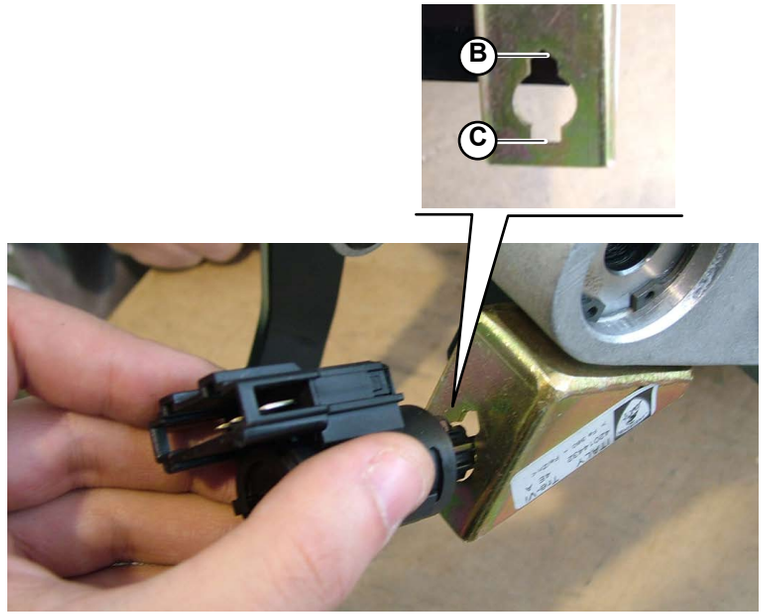

Fig.2

® Automobili Lamborghini S.p.A.
The information and procedures published below are strictly confidential and exclusively for the Lamborghini Dealer Network and Authorized Service Points. All copyrights are property of Automobili Lamborghini S.p.A based on copyright law. All of the PDF chapters in the WEB workshop manuals described below are based on information available at the time of publication. The company reserves the right to make updates and modifications. The following are prohibited: reprinting, reproduction, forwarding to unauthorized people and/or third parties, and translation, including partial, without written authorization from Automobili Lamborghini S.p.A.

headlamps direction check

A special tool is used to ensure the headlamps are pointing in the correct direction (A-Fig. 1).

To ensure the headlamps are pointing in the correct direction, proceed as follows:

- position the tool flush with the front tyres
- extract the reference rod and raise the tool to the height of the front headlamps.
- adjust the correct angle by acting directly on the headlamps **(094102)**, using the direction indicated by the tool as a reference.

Fig.1

® Automobili Lamborghini S.p.A.
The information and procedures published below are strictly confidential and exclusively for the Lamborghini Dealer Network and Authorized Service Points. All copyrights are property of Automobili Lamborghini S.p.A based on copyright law. All of the PDF chapters in the WEB workshop manuals described below are based on information available at the time of publication. The company reserves the right to make updates and modifications. The following are prohibited: reprinting, reproduction, forwarding to unauthorized people and/or third parties, and translation, including partial, without written authorization from Automobili Lamborghini S.p.A.

Front combination lights adjustment

Front combination lights have three adjustment devices each (two to adjust low beam headlights and one to adjust the fog lights) fitted in the lower part of the cluster. Can be accessed from the luggage compartment inner sides and from the wheel arch shutters.
Each cluster has one lamp for both high beam and low beam headlights: the light different inclination is obtained by means of the power reflecting baffle plate inside the cluster.

LH front combination lights adjustment devices (Fig.1)		
Ref.	**Description**	**Adjustment**
A.	Low beam and high beam headlight horizontal light adjustment	Turning the light inside clockwise
B.	Low beam and high beam headlight vertical light adjustment	Turning the light downwards clockwise
C.	Fog light adjustment	Turning the light upwards clockwise

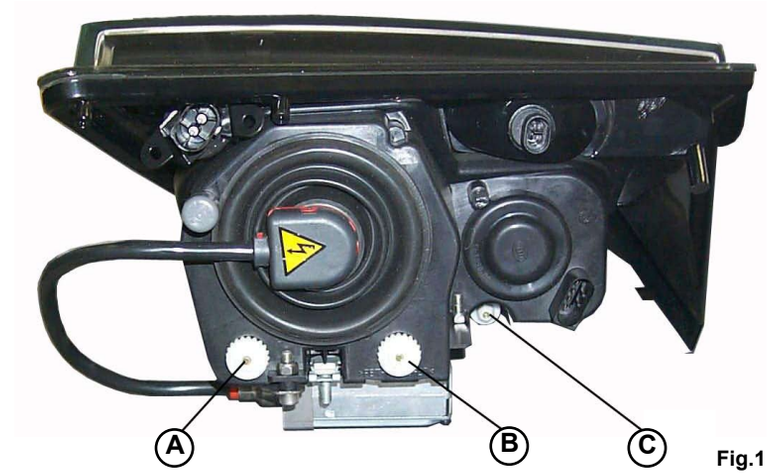

Fig.1

® Automobili Lamborghini S.p.A.
The information and procedures published below are strictly confidential and exclusively for the Lamborghini Dealer Network and Authorized Service Points. All copyrights are property of Automobili Lamborghini S.p.A based on copyright law. All of the PDF chapters in the WEB workshop manuals described below are based on information available at the time of publication. The company reserves the right to make updates and modifications. The following are prohibited: reprinting, reproduction, forwarding to unauthorized people and/or third parties, and translation, including partial, without written authorization from Automobili Lamborghini S.p.A.

- Remove the luggage compartment inner sides and the wheel arch shutters.
- Adjust the low/high beam headlight vertical inclination by means of device (**A-Fig.2**).
- Adjust the low/high beam headlight horizontal inclination by means of device (**B-Fig.2**).
- Adjust the fog light vertical inclination by means of device (**C-Fig.2**).

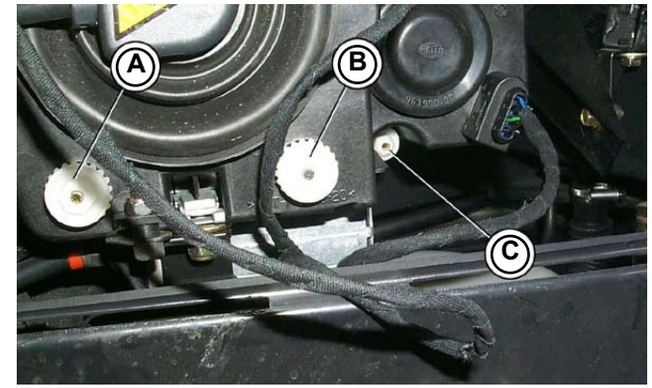

Fig.2

® Automobili Lamborghini S.p.A.
The information and procedures published below are strictly confidential and exclusively for the Lamborghini Dealer Network and Authorized Service Points. All copyrights are property of Automobili Lamborghini S.p.A based on copyright law. All of the PDF chapters in the WEB workshop manuals described below are based on information available at the time of publication. The company reserves the right to make updates and modifications. The following are prohibited: reprinting, reproduction, forwarding to unauthorized people and/or third parties, and translation, including partial, without written authorization from Automobili Lamborghini S.p.A.

Disassembling the front lights

Preliminary operations

- Remove the front wheels **(060103)**.
- Disassemble the front wheel arches **(082103)**.

Disassembling the front lights

1. Disassemble the light by unscrewing the 3 screws (**A-Fig.1/2**) securing the device to the chassis. Carry out this procedure by accessing the free space left by the wheel arch.
2. Disconnect the 3 wiring harnesses connected to the front light.
3. Remove the front light.

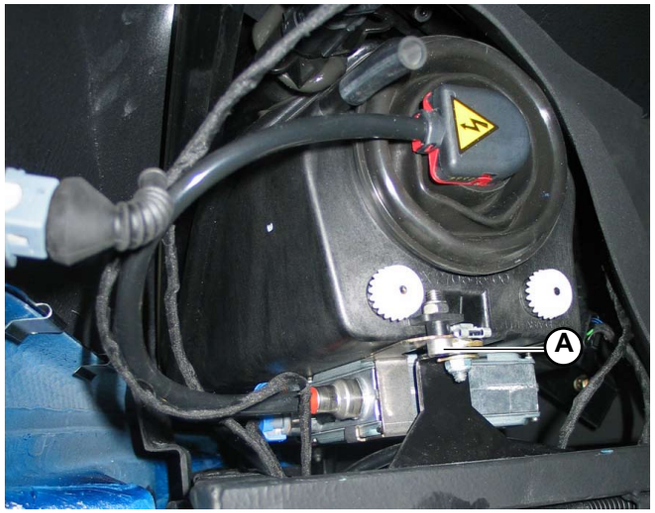

Fig.1

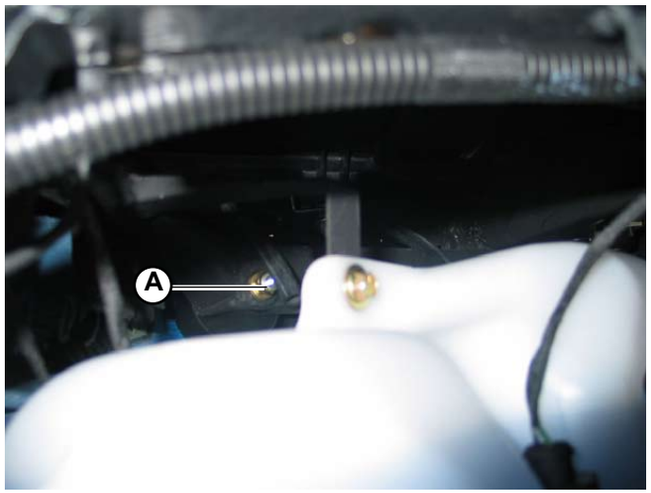

Fig.2

® Automobili Lamborghini S.p.A.
The information and procedures published below are strictly confidential and exclusively for the Lamborghini Dealer Network and Authorized Service Points. All copyrights are property of Automobili Lamborghini S.p.A based on copyright law. All of the PDF chapters in the WEB workshop manuals described below are based on information available at the time of publication. The company reserves the right to make updates and modifications. The following are prohibited: reprinting, reproduction, forwarding to unauthorized people and/or third parties, and translation, including partial, without written authorization from Automobili Lamborghini S.p.A.

CAUTION

The gas-discharge lamp high-voltage components (xenon light) that are in the front combination lights must be handled with care. Danger of death!
Avoid touching the halogen bulbs with hands as this reduces the efficiency. If contact with hands occurs, clean the bulb carefully with alcohol.

To reach each front combination light bulb remove the wheel and rectangular bulkhead on the front wheelarch near the side turn indicator or side marker.

Ref.	Description	Procedure
A.	Low/high beam headlights	a. Disconnect the high-voltage cable by turning the connector counterclockwise b. Remove the guard c. Turn the bulb mounting ring nut counterclockwise, remove it from its retaining element and take it out. d. Remove the bulb
B.	Fog lights	a. Remove the round cap b. Remove the retaining spring c. Remove the bulb disconnecting the connector
C.	Turn signals	Remove the bayonet bulb
D.	Running lights	Remove the screw-in bulb

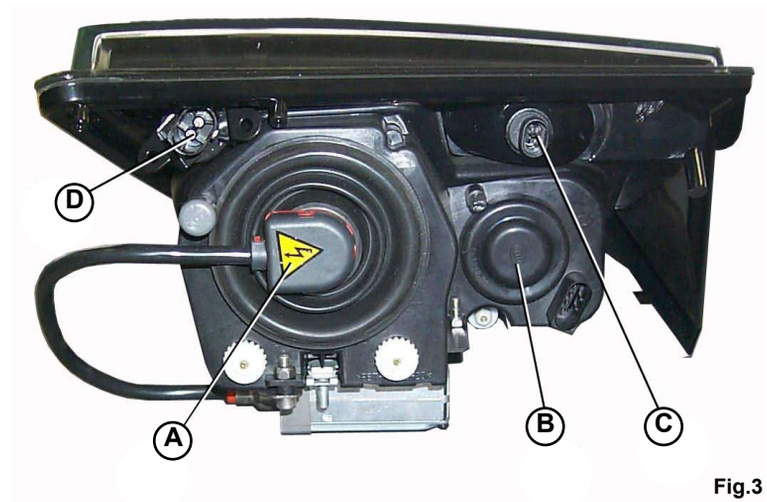

Fig.3

® Automobili Lamborghini S.p.A.
The information and procedures published below are strictly confidential and exclusively for the Lamborghini Dealer Network and Authorized Service Points. All copyrights are property of Automobili Lamborghini S.p.A based on copyright law. All of the PDF chapters in the WEB workshop manuals described below are based on information available at the time of publication. The company reserves the right to make updates and modifications. The following are prohibited: reprinting, reproduction, forwarding to unauthorized people and/or third parties, and translation, including partial, without written authorization from Automobili Lamborghini S.p.A.

Assembling the front lights

1. Assemble the light on the chassis by tightening the 3 screws (**A-Fig. 1/2**). Carry out this procedure by accessing the free space left by the wheel arch.
2. Connect the 3 wiring harnesses to the front light.

- Assemble the front wheel arches **(082105)**.
- Assemble the front wheels **(060105)**.

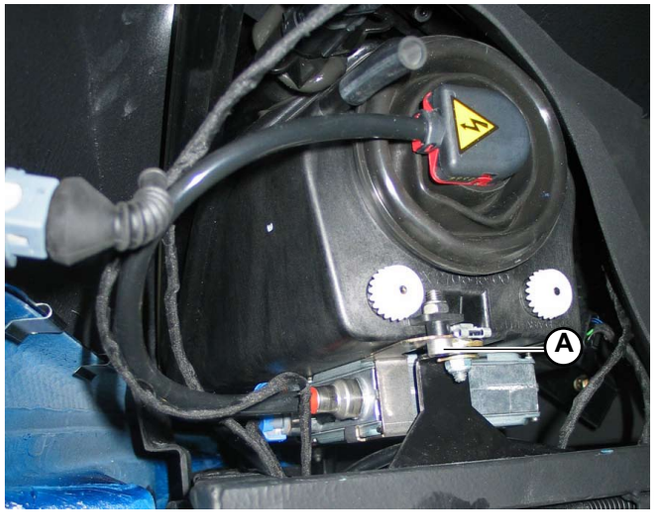

Fig.1

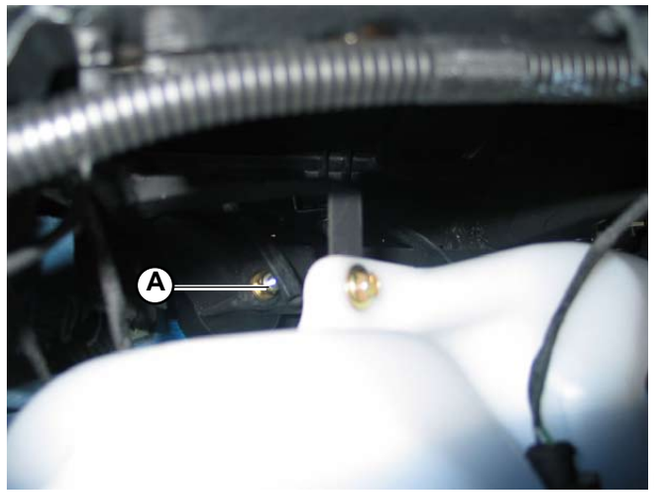

Fig.2

® Automobili Lamborghini S.p.A.
The information and procedures published below are strictly confidential and exclusively for the Lamborghini Dealer Network and Authorized Service Points. All copyrights are property of Automobili Lamborghini S.p.A based on copyright law. All of the PDF chapters in the WEB workshop manuals described below are based on information available at the time of publication. The company reserves the right to make updates and modifications. The following are prohibited: reprinting, reproduction, forwarding to unauthorized people and/or third parties, and translation, including partial, without written authorization from Automobili Lamborghini S.p.A.

CAUTION

The gas-discharge lamp high-voltage components (xenon light) that are in the front combination lights must be handled with care. Danger of death!
Avoid touching the halogen bulbs with hands as this reduces the efficiency. If contact with hands occurs, clean the bulb thoroughly with alcohol.

Ref.	Description	Procedure
A.	Low/high beam headlights	a. Assemble the lamp. c. Attach the lamp mounting ring nut onto its retaining element and turn it clockwise to lock it into place b. Insert the guard. c. Connect the high-voltage cable by turning the connector clockwise.
B.	Fog lights	a. Secure the lamp by attaching the connector. b. Position the retaining spring. c. Position the round cap.
C.	Turn signal	Insert the bayonet bulb.
D.	Running light	Insert the screw-in bulb.

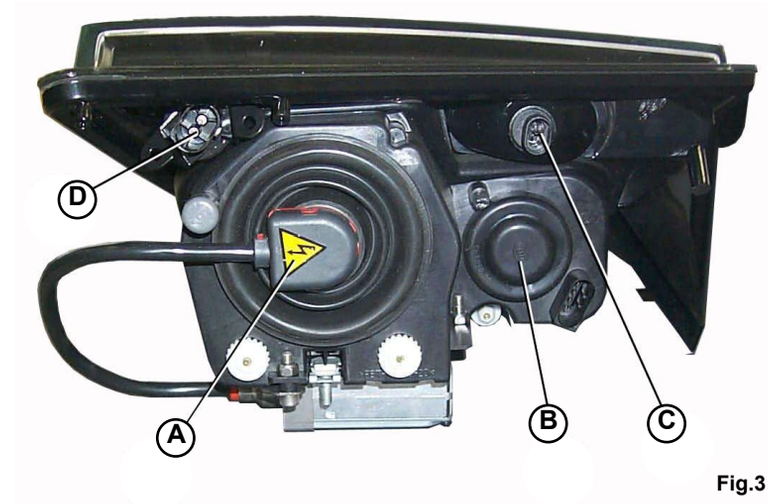

Fig.3

After assembling the front combination light bulbs, reposition the rectangular bulkhead on the front wheel arch near the side turn signal or side marker and reassemble the wheel.

® Automobili Lamborghini S.p.A.
The information and procedures published below are strictly confidential and exclusively for the Lamborghini Dealer Network and Authorized Service Points. All copyrights are property of Automobili Lamborghini S.p.A based on copyright law. All of the PDF chapters in the WEB workshop manuals described below are based on information available at the time of publication. The company reserves the right to make updates and modifications. The following are prohibited: reprinting, reproduction, forwarding to unauthorized people and/or third parties, and translation, including partial, without written authorization from Automobili Lamborghini S.p.A.

Licence plate light disassembly

Access to the combination light as follows (**Fig.1**):

- remove the two screws;
- remove the lenses;
- remove the bulb.

Fig.1

® Automobili Lamborghini S.p.A.
The information and procedures published below are strictly confidential and exclusively for the Lamborghini Dealer Network and Authorized Service Points. All copyrights are property of Automobili Lamborghini S.p.A based on copyright law. All of the PDF chapters in the WEB workshop manuals described below are based on information available at the time of publication. The company reserves the right to make updates and modifications. The following are prohibited: reprinting, reproduction, forwarding to unauthorized people and/or third parties, and translation, including partial, without written authorization from Automobili Lamborghini S.p.A.

Licence plate light assembly

- Assemble the bulbs of the license plate light.
- Reposition the lenses.
- Tighten the two mounting screws.

Fig.1

® Automobili Lamborghini S.p.A.
The information and procedures published below are strictly confidential and exclusively for the Lamborghini Dealer Network and Authorized Service Points. All copyrights are property of Automobili Lamborghini S.p.A based on copyright law. All of the PDF chapters in the WEB workshop manuals described below are based on information available at the time of publication. The company reserves the right to make updates and modifications. The following are prohibited: reprinting, reproduction, forwarding to unauthorized people and/or third parties, and translation, including partial, without written authorization from Automobili Lamborghini S.p.A.

Brake & taillight reflector disassembly

1. Access to the combination light as follows (**Fig.1**):
- Remove the silencer safety grid **(025103)**.
- Disconnect the rear spoiler stepping motor connector.
- Unscrew the engine hood front mounting elements, push it towards the car rear part in order to release the engine hood rear pins from their couplings.
- Slightly lift the engine hood and push it forwards in order to release the rear combination light mounting screws.
- Unscrew the rear combination light mounting screws to the body (**A-Fig.1**).

Fig.1

2. Unscrew the nut (**B-Fig.2**) and remove the rear combination light.

Fig.2

® Automobili Lamborghini S.p.A.
The information and procedures published below are strictly confidential and exclusively for the Lamborghini Dealer Network and Authorized Service Points. All copyrights are property of Automobili Lamborghini S.p.A based on copyright law. All of the PDF chapters in the WEB workshop manuals described below are based on information available at the time of publication. The company reserves the right to make updates and modifications. The following are prohibited: reprinting, reproduction, forwarding to unauthorized people and/or third parties, and translation, including partial, without written authorization from Automobili Lamborghini S.p.A.

Ref.	Description	Procedure
A.	Brake and parking light	a. Turn the bulb mounting ring nut anticlockwise, release from its holder and remove. b. Remove the bulb
B.	Reverse light	a. Unscrew the 10 screws (**G-Fig.4**) to access the bulbs b. Turn the bulb mounting ring nut anticlockwise, release from its holder and remove. c. Remove the bulb
C.	Indicator light	a. Unscrew the 10 screws (**G-Fig.4**) to access the bulbs b. Turn the bulb mounting ring nut anticlockwise, release from its holder and remove. c. Remove the bulb
D.	Parking light	a. Turn the bulb mounting ring nut anticlockwise, release from its holder and remove. b. Remove the bulb
E.	Rear fog light	a. Turn the bulb mounting ring nut anticlockwise, release from its holder and remove. b. Remove the bulb

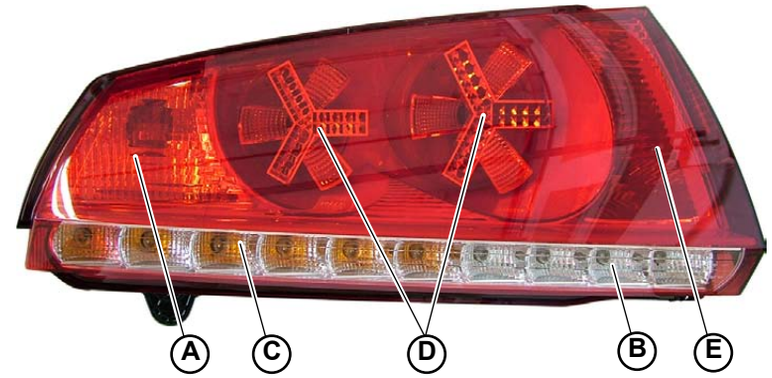

Fig.3

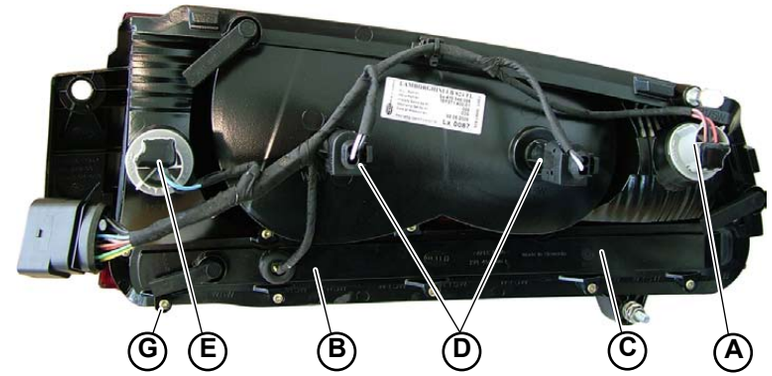

Fig.4

F.	Third brake light	a. Detach the 2 covers (**H-Fig.5**) on the third brake light . b. Unscrew the 2 fixing screws on the third brake light under the covers. c. Disconnect the connection.

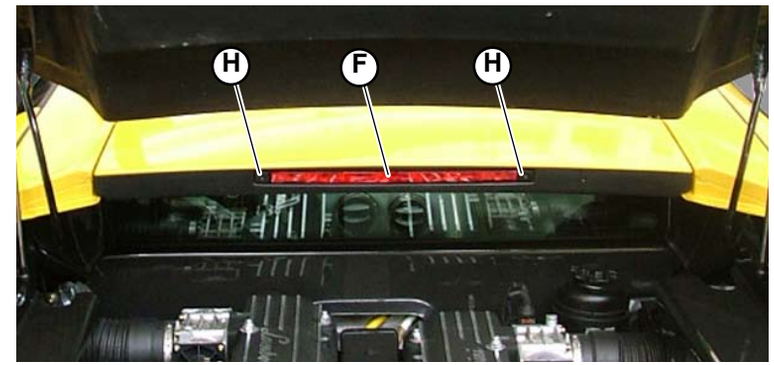

Fig.5

® Automobili Lamborghini S.p.A.
The information and procedures published below are strictly confidential and exclusively for the Lamborghini Dealer Network and Authorized Service Points. All copyrights are property of Automobili Lamborghini S.p.A based on copyright law. All of the PDF chapters in the WEB workshop manuals described below are based on information available at the time of publication. The company reserves the right to make updates and modifications. The following are prohibited: reprinting, reproduction, forwarding to unauthorized people and/or third parties, and translation, including partial, without written authorization from Automobili Lamborghini S.p.A.

Brake & taillight reflector assembly

- Tighten the nut (**A-Fig.1**) on the relative seat in the body.

Fig.1

- Tighten the rear combination light mounting screws onto the body, shown in the figure (**B-Fig.2**).
- Lower the engine hood and push it towards the front part of the vehicle in order to reconnect the engine hood rear pins with the relative couplings.
- Tighten the front mounting elements of the engine hood.
- Attach the connector of the rear spoiler stepping motor.
- Assemble the silencer safety grid **(025105)**.

Fig.2

® Automobili Lamborghini S.p.A.
The information and procedures published below are strictly confidential and exclusively for the Lamborghini Dealer Network and Authorized Service Points. All copyrights are property of Automobili Lamborghini S.p.A based on copyright law. All of the PDF chapters in the WEB workshop manuals described below are based on information available at the time of publication. The company reserves the right to make updates and modifications. The following are prohibited: reprinting, reproduction, forwarding to unauthorized people and/or third parties, and translation, including partial, without written authorization from Automobili Lamborghini S.p.A.

Ref.	Description	Procedure
A.	Brake and parking light	a. Assemble the lamp. b. Attach the lamp mounting ring nut onto its holder and turn it clockwise to lock it into place
B.	Reverse light	a. Assemble the lamp. b. Attach the lamp mounting ring nut onto its holder and turn it clockwise to lock it into place c. Secure the bulb sockets using the 10 screws (**G-Fig.4**)
C.	Indicator light	a. Assemble the lamp. b. Attach the lamp mounting ring nut onto its holder and turn it clockwise to lock it into place c. Secure the bulb sockets using the 10 screws (**G-Fig.4**)
D.	Parking light	a. Assemble the lamp. b. Attach the lamp mounting ring nut onto its holder and turn it clockwise to lock it into place
E.	Rear fog light	a. Assemble the lamp. b. Attach the lamp mounting ring nut onto its holder and turn it clockwise to lock it into place

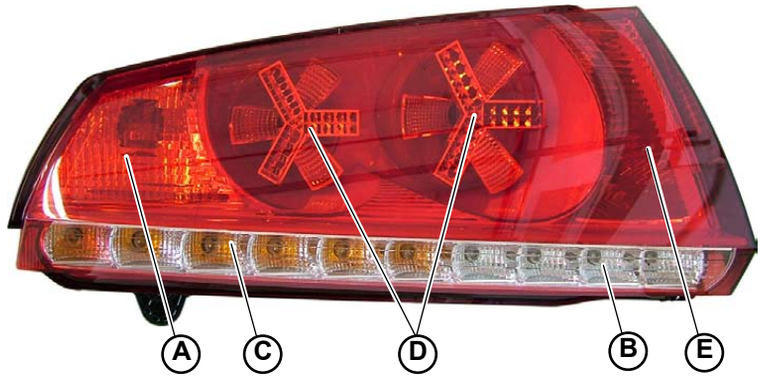

Fig.3

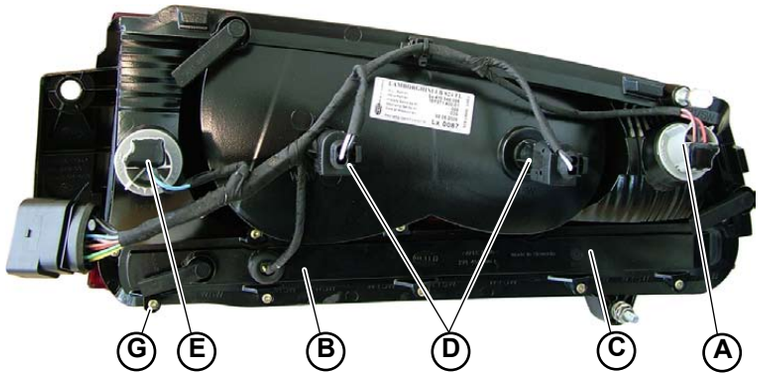

Fig.4

F.	Third brake light	a. Connect the third brake light connection. b. Secure the third brake light by tightening the 2 screws under the covers (**H-Fig.5**). c. Position the 2 covers (**H-Fig.5**) on the third brake light.

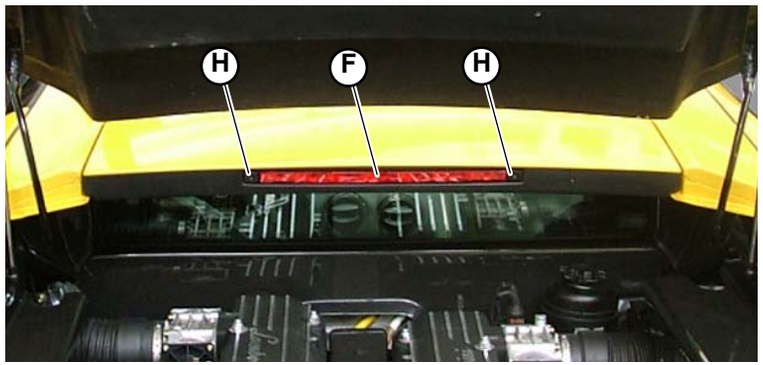

Fig.5

® Automobili Lamborghini S.p.A.
The information and procedures published below are strictly confidential and exclusively for the Lamborghini Dealer Network and Authorized Service Points. All copyrights are property of Automobili Lamborghini S.p.A based on copyright law. All of the PDF chapters in the WEB workshop manuals described below are based on information available at the time of publication. The company reserves the right to make updates and modifications. The following are prohibited: reprinting, reproduction, forwarding to unauthorized people and/or third parties, and translation, including partial, without written authorization from Automobili Lamborghini S.p.A.

Disassembling the interior roof lamp

1. Remove the interior lights (**A-Fig.1**) by releasing the 2 side clips from their couplings.
2. Disconnect the connection (**B-Fig.1**).
3. Unscrew the 2 mountings screws (**C-Fig.2**).
4. Remove the roof lamp (**D-Fig.3**) by releasing the 2 flanges (**E-Fig.4**) from their couplings.

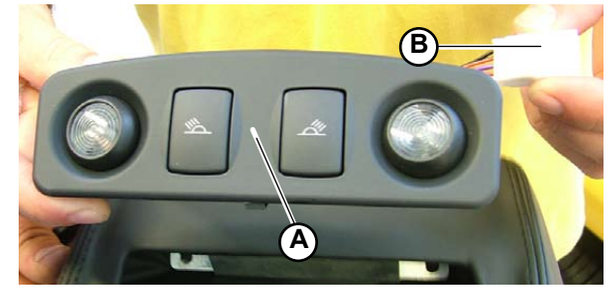

Fig.1

Fig.2

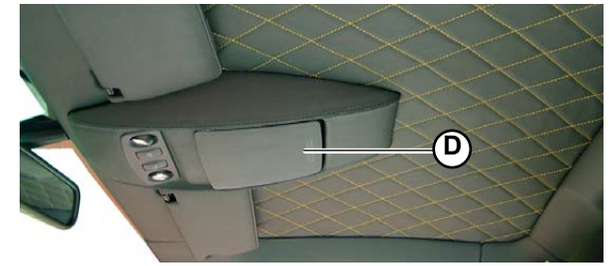

Fig.3

Fig.4

® Automobili Lamborghini S.p.A.
The information and procedures published below are strictly confidential and exclusively for the Lamborghini Dealer Network and Authorized Service Points. All copyrights are property of Automobili Lamborghini S.p.A based on copyright law. All of the PDF chapters in the WEB workshop manuals described below are based on information available at the time of publication. The company reserves the right to make updates and modifications. The following are prohibited: reprinting, reproduction, forwarding to unauthorized people and/or third parties, and translation, including partial, without written authorization from Automobili Lamborghini S.p.A.

Assembling the interior lights

1. Position the roof lamp (**A-Fig.1**) by inserting the 2 slots (**B-Fig.2**) into the couplings in the car's roof.

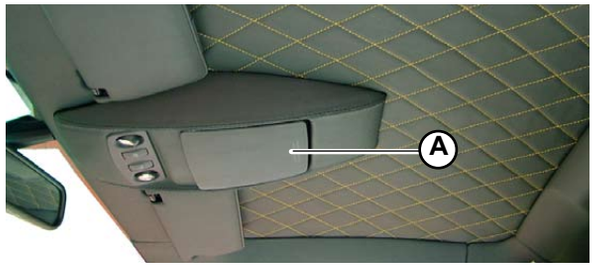

Fig.1

Fig.2

2. Secure the roof lamp by tightening the 2 screws (**C-Fig.3**).

Fig.3

3. Connect the lights connector (**D-Fig.4**) and insert the lights (**E-Fig.4**) by inserting the 2 clips into the side couplings.

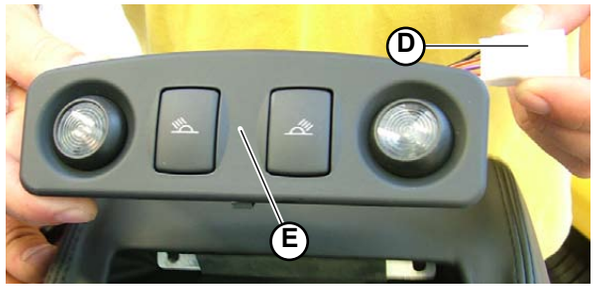

Fig.4

® Automobili Lamborghini S.p.A.
The information and procedures published below are strictly confidential and exclusively for the Lamborghini Dealer Network and Authorized Service Points. All copyrights are property of Automobili Lamborghini S.p.A based on copyright law. All of the PDF chapters in the WEB workshop manuals described below are based on information available at the time of publication. The company reserves the right to make updates and modifications. The following are prohibited: reprinting, reproduction, forwarding to unauthorized people and/or third parties, and translation, including partial, without written authorization from Automobili Lamborghini S.p.A.

Horn disassembly

Preliminary operations

- Disassemble the right front wheel **(060103)**.
- Disassemble the right front stone-guard **(082103)**.

Horn disassembly

1. Disconnect the two connections (**A/B-Fig.1**) of the two horns (**C/D-Fig.1**).

2. Unscrew the two screws (**E/F-Fig.1**) that secure the horns to the chassis.

3. Remove the horns.

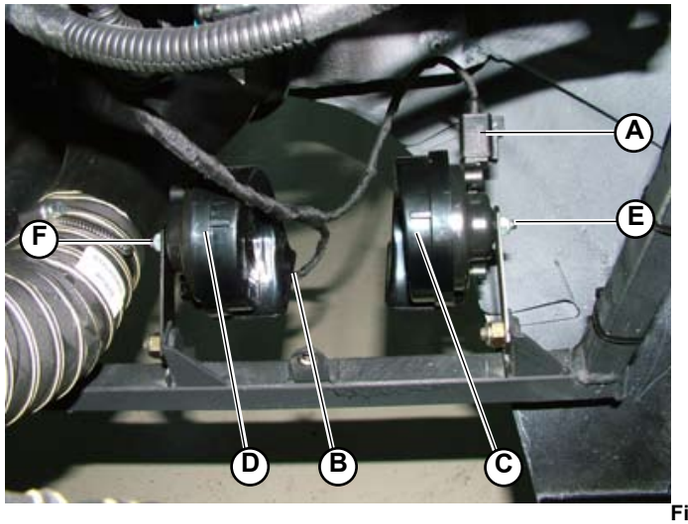

Fig.1

® Automobili Lamborghini S.p.A.
The information and procedures published below are strictly confidential and exclusively for the Lamborghini Dealer Network and Authorized Service Points. All copyrights are property of Automobili Lamborghini S.p.A based on copyright law. All of the PDF chapters in the WEB workshop manuals described below are based on information available at the time of publication. The company reserves the right to make updates and modifications. The following are prohibited: reprinting, reproduction, forwarding to unauthorized people and/or third parties, and translation, including partial, without written authorization from Automobili Lamborghini S.p.A.

Horn assembly

1. Tighten the two horns (**A/B-Fig.1**) onto the chassis using the two screws (**C/D-Fig.1**).

2. Reset the two connections (**E/F-Fig.1**) of the horns.

- Reassemble the right front stone-guard **(082105)**.
- Reassemble the right front wheel **(060105)**.

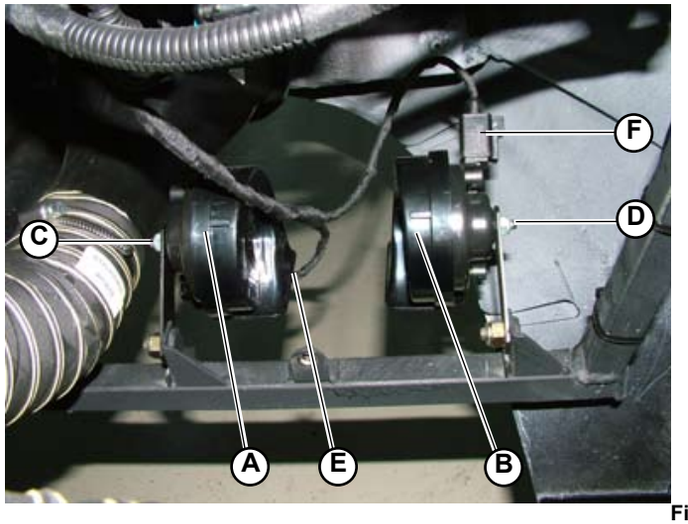

Fig.1

® Automobili Lamborghini S.p.A.
The information and procedures published below are strictly confidential and exclusively for the Lamborghini Dealer Network and Authorized Service Points. All copyrights are property of Automobili Lamborghini S.p.A based on copyright law. All of the PDF chapters in the WEB workshop manuals described below are based on information available at the time of publication. The company reserves the right to make updates and modifications. The following are prohibited: reprinting, reproduction, forwarding to unauthorized people and/or third parties, and translation, including partial, without written authorization from Automobili Lamborghini S.p.A.

Turn signals disassembly

These indicators are installed on the front fender at the rear side and can be accessed through a bulkhead in the front wheel stone-guard.

Turn the wheel in order to access the stone-guard bulkhead at the side turn signal (**A-Fig.1**).
Remove the bulkhead and the side turn signal rear guard; unlock the mounting clips and then replace them.

Fig.1

® Automobili Lamborghini S.p.A.
The information and procedures published below are strictly confidential and exclusively for the Lamborghini Dealer Network and Authorized Service Points. All copyrights are property of Automobili Lamborghini S.p.A based on copyright law. All of the PDF chapters in the WEB workshop manuals described below are based on information available at the time of publication. The company reserves the right to make updates and modifications. The following are prohibited: reprinting, reproduction, forwarding to unauthorized people and/or third parties, and translation, including partial, without written authorization from Automobili Lamborghini S.p.A.

Turn signals assembly

Replace the turn signal (**A-Fig.1**) after securing the mounting clips. Reposition the rear guard and the bulkhead on the stone-guard of the front wheel.

Fig.1

® Automobili Lamborghini S.p.A.
The information and procedures published below are strictly confidential and exclusively for the Lamborghini Dealer Network and Authorized Service Points. All copyrights are property of Automobili Lamborghini S.p.A based on copyright law. All of the PDF chapters in the WEB workshop manuals described below are based on information available at the time of publication. The company reserves the right to make updates and modifications. The following are prohibited: reprinting, reproduction, forwarding to unauthorized people and/or third parties, and translation, including partial, without written authorization from Automobili Lamborghini S.p.A.

Windshield wiper motor disassembly

Preliminary operations

- Disassemble the bulkhead of the luggage compartment under the rug **(080603)**.

Windshield wiper motor disassembly

1. Disassemble the windshield wiper.
2. Disassemble the windshield wiper pin (**A-Fig.1**) by unscrewing the nut that secures it to the body.
3. Disconnect the switch from the bulkhead.
4. Disconnect the windshield wiper motor's connector (**B-Fig.2**).
5. Unscrew the three mounting screws of the bracket (**C-Fig.3**) that supports the windshield wiper motor.
6. Extract the windshield wiper motor (**D-Fig.3**).

Fig.1

Fig.2

Fig.3

® Automobili Lamborghini S.p.A.
The information and procedures published below are strictly confidential and exclusively for the Lamborghini Dealer Network and Authorized Service Points. All copyrights are property of Automobili Lamborghini S.p.A based on copyright law. All of the PDF chapters in the WEB workshop manuals described below are based on information available at the time of publication. The company reserves the right to make updates and modifications. The following are prohibited: reprinting, reproduction, forwarding to unauthorized people and/or third parties, and translation, including partial, without written authorization from Automobili Lamborghini S.p.A.

Windshield wiper motor assembly

1. Assemble the windshield wiper motor (**A-Fig.1**) by securing it with the bracket (**B-Fig.1**).
2. Connect the windshield wiper motor's connector (**C-Fig.2**).
3. Connect the switch to the bulkhead.

Fig.1

Fig.2

4. Assemble the windshield wiper pin (**D-Fig.3**) by tightening the nut that secures it to the body.
5. Assemble the windshield wiper.

Fig.3

- Reassemble the bulkhead of the luggage compartment under the rug **(080605)**.

® Automobili Lamborghini S.p.A.
The information and procedures published below are strictly confidential and exclusively for the Lamborghini Dealer Network and Authorized Service Points. All copyrights are property of Automobili Lamborghini S.p.A based on copyright law. All of the PDF chapters in the WEB workshop manuals described below are based on information available at the time of publication. The company reserves the right to make updates and modifications. The following are prohibited: reprinting, reproduction, forwarding to unauthorized people and/or third parties, and translation, including partial, without written authorization from Automobili Lamborghini S.p.A.

AIRBAG control unit

The electronic control unit governs and activates the various airbag modules.

The ECU contains following parts:

- an aluminum container in which the following are arranged:
- an electromechanical sensor which discriminates the “activation/deactivation” conditions according to vehicle deceleration;
- an electromagnetic safety sensor operating with the electromechanical sensor; both sensors must enable the “activation” condition for the system to be deployed;
- an electronic board that analyses the signals from the two sensors and deploys the airbag modules when required.

Furthermore, the electronic board has self-diagnostic features. When the ignition key is turned to “MAR”, it checks the correct operation of the entire system. During the test a red warning light on the dashboard turns on. The warning light turns off approximately four seconds after the engine is started if the system is working correctly.

The airbag system will need to be attended to at an authorized workshop if either the red airbag warning light on the dashboard stays on for longer than 4-6 seconds after the engine has been started or turns on while traveling.

® Automobili Lamborghini S.p.A.
The information and procedures published below are strictly confidential and exclusively for the Lamborghini Dealer Network and Authorized Service Points. All copyrights are property of Automobili Lamborghini S.p.A based on copyright law. All of the PDF chapters in the WEB workshop manuals described below are based on information available at the time of publication. The company reserves the right to make updates and modifications. The following are prohibited: reprinting, reproduction, forwarding to unauthorized people and/or third parties, and translation, including partial, without written authorization from Automobili Lamborghini S.p.A.

Airbag control unit disassembly

Preliminary operations

- Disconnect the battery main switch inside the engine compartment and wait 2-3 minutes before carrying out any operation.
- Disassemble the right and left sides of the central tunnel **(086303)**.

Control unit disassembly

1. Disconnect the connector (**A-Fig.1**) from the airbag control unit.
2. Unscrew the three screws that secure the airbag control unit (**B-Fig.1**) to the crankcase of the central tunnel.
3. Remove the airbag control unit.

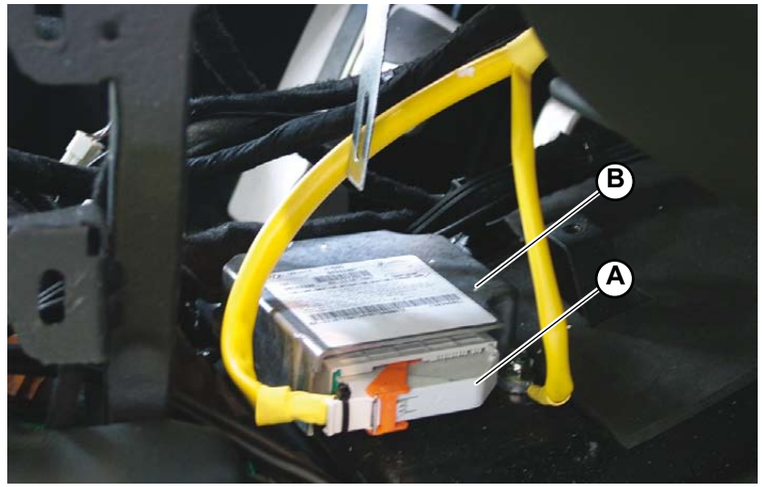

Fig.1

® Automobili Lamborghini S.p.A.
The information and procedures published below are strictly confidential and exclusively for the Lamborghini Dealer Network and Authorized Service Points. All copyrights are property of Automobili Lamborghini S.p.A based on copyright law. All of the PDF chapters in the WEB workshop manuals described below are based on information available at the time of publication. The company reserves the right to make updates and modifications. The following are prohibited: reprinting, reproduction, forwarding to unauthorized people and/or third parties, and translation, including partial, without written authorization from Automobili Lamborghini S.p.A.

Airbag control unit assembly

1. If a new control unit is installed, remove the traceability label at the bottom of the product label on the back of the control unit.

2. Install the airbag control unit (**A-Fig.1**) on the base of the central tunnel. Make sure that the vehicle direction of travel corresponds to that of the arrow on the control unit.

3. Make sure that the control unit does not present signs of wear, scratches and oil. Check that no foreign bodies are stuck underneath the control unit.

4. Fasten the three control unit screws at the specific tightening torque;
   Retaining screws: **tightening torque (000800-29b)**

5. Check that the wiring harness is not squeezed between control unit and mount.

6. Attach the connector (**B-Fig.1**) to the airbag control unit, correctly turning the tab to lock it into place.

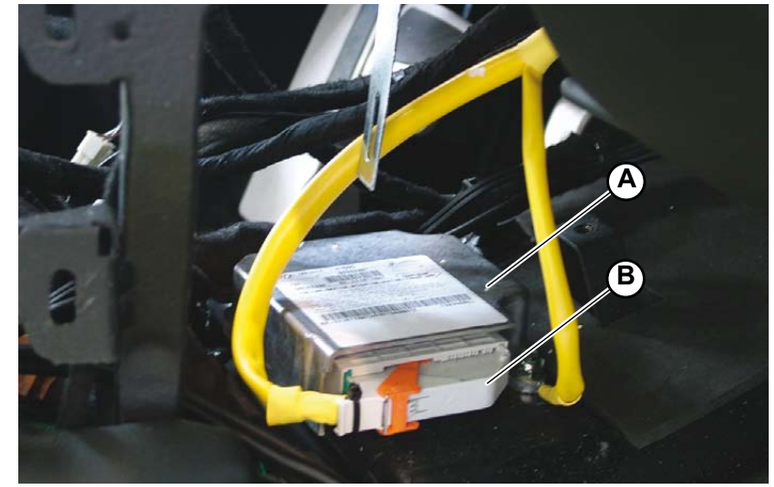

Fig.1

- Reassemble the right and left sides of the central tunnel **(086305)** and reconnect the battery disconnect.

® Automobili Lamborghini S.p.A.
The information and procedures published below are strictly confidential and exclusively for the Lamborghini Dealer Network and Authorized Service Points. All copyrights are property of Automobili Lamborghini S.p.A based on copyright law. All of the PDF chapters in the WEB workshop manuals described below are based on information available at the time of publication. The company reserves the right to make updates and modifications. The following are prohibited: reprinting, reproduction, forwarding to unauthorized people and/or third parties, and translation, including partial, without written authorization from Automobili Lamborghini S.p.A.

Fuses

These fuses are located on the dashboard left-hand side (**Fig.1**) and can be accessed by opening the driver's door and removing the triangular pressed-in panel.

STOP

Take special care when removing this panel because:

- **the dashboard leather upholstering may be irretrievably damaged;**
- **improper reinstallation of the panel due to damage prevents driver door closing and can damage the entire dashboard**

Fig.1

® Automobili Lamborghini S.p.A.
The information and procedures published below are strictly confidential and exclusively for the Lamborghini Dealer Network and Authorized Service Points. All copyrights are property of Automobili Lamborghini S.p.A based on copyright law. All of the PDF chapters in the WEB workshop manuals described below are based on information available at the time of publication. The company reserves the right to make updates and modifications. The following are prohibited: reprinting, reproduction, forwarding to unauthorized people and/or third parties, and translation, including partial, without written authorization from Automobili Lamborghini S.p.A.

Ref.	Use	Features
1.	Front fog light fuse	15 A
2.	Right low beam headlight fuse	20 A
3.	Left low beam headlight fuse	20 A
4.	Rear fog light fuse	5 A
5.	Fuse for right front parking light, left tail light and left license plate light	5 A
6.	Fuse for left front parking light, right tail light and right license plate light	7.5 A
7.	A/C and radio lights	3 A
8.	Fuse for right and left high beam headlight actuator	10 A
9.	Fuse for GFA control unit signal, turn signals, dashboard buttons	7.5 A
10.	Fuse for reverse, heating and mirror closing	5 A
11.	Fuse for instruments, purge, console	7.5 A
12.	Dashboard push-button panel power fuse	3 A
13.	Fuse for turn signals and hazard light	15 A
14.	Available	15 A
15.	Electric horn fuse	15 A
16.	--	

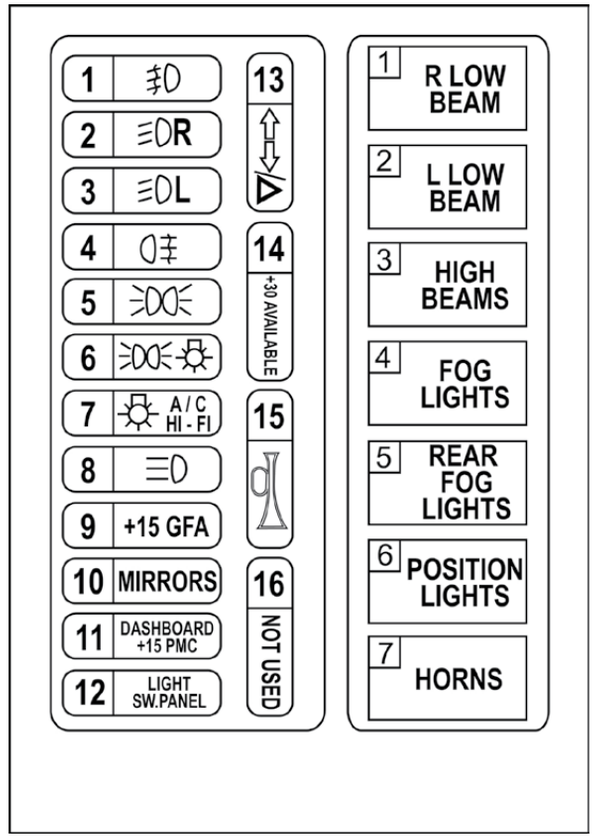

Fig.2

® Automobili Lamborghini S.p.A.
The information and procedures published below are strictly confidential and exclusively for the Lamborghini Dealer Network and Authorized Service Points. All copyrights are property of Automobili Lamborghini S.p.A based on copyright law. All of the PDF chapters in the WEB workshop manuals described below are based on information available at the time of publication. The company reserves the right to make updates and modifications. The following are prohibited: reprinting, reproduction, forwarding to unauthorized people and/or third parties, and translation, including partial, without written authorization from Automobili Lamborghini S.p.A.

To access the main fuse board remove the carpet on the passenger side footrest and remove the four screws securing the footrest. The door-locking unit (**A-Fig.3**) is above the board and the wiper system control unit (**B-Fig.3**) is on the right.

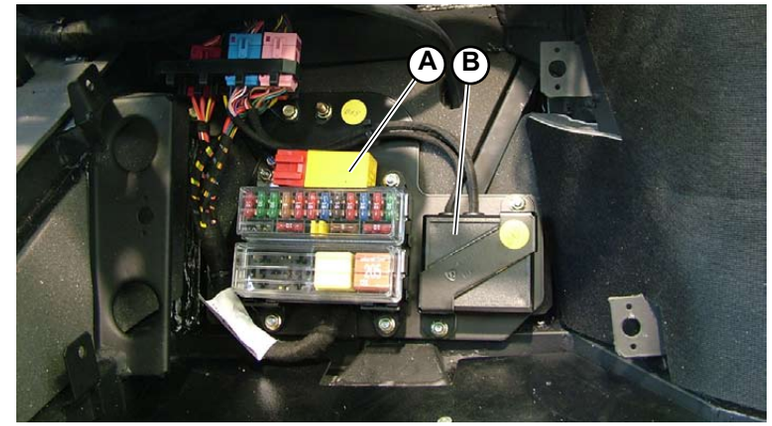

Fig.3

Ref.	Use	Features
1.	Fuse for wiper and washer system, headlight cleaner	30 A
2.	Brake (ABS), engine control unit fuse	10 A
3.	Anti-theft fuse	15 A
4.	Airbag fuse	10 A
5.	ABS fuse	7.5 A
6.	Air conditioning system fuse	15 A
7.	Fuse for lighter, clock, audio system	15 A
8.	Fuse for GFA control unit, OBDII, CAN instruments	10 A
9.	Roof light, door clearance lights	5 A
10.	ECU Power window assembly	30 A
11.	Air conditioning system fan fuse	30 A
12.	Fuse for door-locking, tunnel button control unit	10 A
13.	Anti-theft fuse	10 A
14.	Ready for satellite navigation connection	5 A
15.	Reverse gear, third brake light and power window ECU	10 A
16.	--	

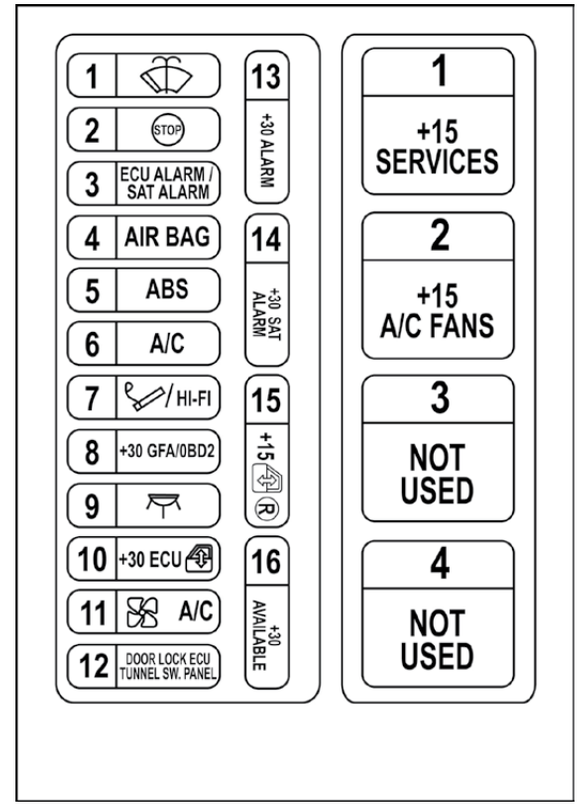

Fig.4

® Automobili Lamborghini S.p.A.
The information and procedures published below are strictly confidential and exclusively for the Lamborghini Dealer Network and Authorized Service Points. All copyrights are property of Automobili Lamborghini S.p.A based on copyright law. All of the PDF chapters in the WEB workshop manuals described below are based on information available at the time of publication. The company reserves the right to make updates and modifications. The following are prohibited: reprinting, reproduction, forwarding to unauthorized people and/or third parties, and translation, including partial, without written authorization from Automobili Lamborghini S.p.A.

The injection fuse and relay box and the power relay and fuses are situated behind the driver's seat and can be accessed removing the panel.

Injection fuse and relay box, power relays and fuses position (Fig.5)	
A.	1-6 LIE control unit
B.	7-12 LIE control unit
C.	Power relays
D.	Power fuses
E.	Injection relay and fuse box
F.	PMC control unit

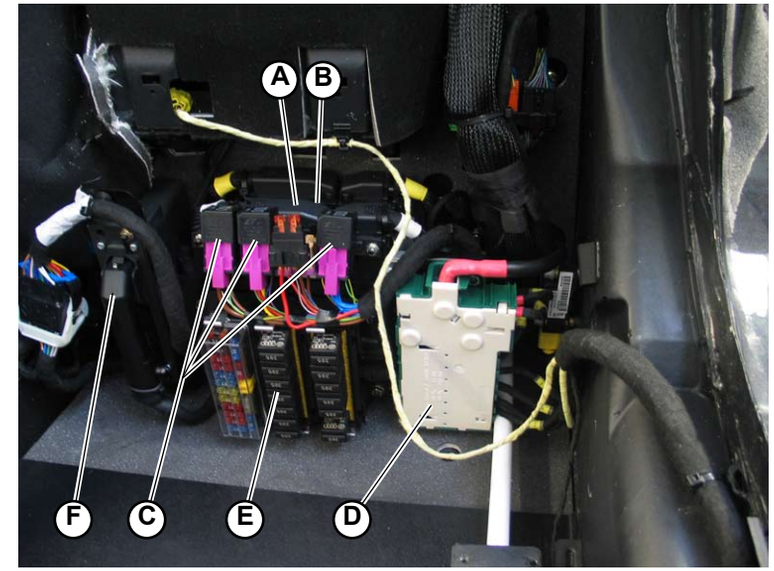

Fig.5

Power relay and fuses (Fig.6)		
Ref.	**Use**	**Features**
1	(+)Right fan	60
2	Starter relay	
3	USA version	
4	(+)Left fan	60

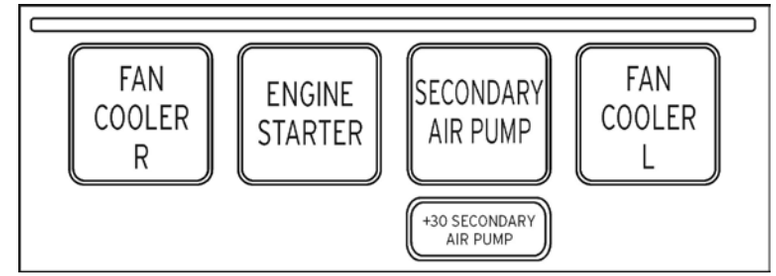

Fig.6

® Automobili Lamborghini S.p.A.
The information and procedures published below are strictly confidential and exclusively for the Lamborghini Dealer Network and Authorized Service Points. All copyrights are property of Automobili Lamborghini S.p.A based on copyright law. All of the PDF chapters in the WEB workshop manuals described below are based on information available at the time of publication. The company reserves the right to make updates and modifications. The following are prohibited: reprinting, reproduction, forwarding to unauthorized people and/or third parties, and translation, including partial, without written authorization from Automobili Lamborghini S.p.A.

- Disconnect the ground cable from the battery negative terminal before removing electronic components (carry out the operation on the battery disconnect inside the engine);
- electrical measurements on electronic components must be carried out only with adequate measuring equipment;
- make sure that electronic device cables (length, type of conductor, positioning, clamping, shielding continuity where required, grounding, etc.) are correct for the system and that have been carefully restored to the original condition after service;
- never insert or remove the connector from the electronic control units while powered;
- in case of temperatures over 80°C (drying ovens) remove the electronic control units;
- when making connections, tighten the connector nuts (temperature, pressure sensors etc.) to the prescribed torque **(000800)**;
- electronic control unit measuring at plugs, plug connections and electrical connections of components are to be carried out only using the appropriate equipment; never use improper tools such as metal wires, screwdrivers, clips or suchlike; besides the danger of short circuits, these methods could damage the plug connections and subsequently cause contact problems.

STOP

When performing electrical welding on the car, always disconnect the batteries and remove the connectors from the electric control units and in particular from the LIE, GFA, PMC, ABS, AIR BAG and air conditioning system control units.
Before replacing the burnt fuse, always check the cause of the fuse burning out. Just once the failure has been removed, the circuit operation can be restored.
It is a good practice to disconnect the battery from the car network if the car has not been not to be used for a long time (several months). This prevents the battery charge from dropping below the minimum. Periodically check the voltage between the two terminals and, if necessary, recharge.

® Automobili Lamborghini S.p.A.
The information and procedures published below are strictly confidential and exclusively for the Lamborghini Dealer Network and Authorized Service Points. All copyrights are property of Automobili Lamborghini S.p.A based on copyright law. All of the PDF chapters in the WEB workshop manuals described below are based on information available at the time of publication. The company reserves the right to make updates and modifications. The following are prohibited: reprinting, reproduction, forwarding to unauthorized people and/or third parties, and translation, including partial, without written authorization from Automobili Lamborghini S.p.A.

This section explains how to disassemble:

A) Disassembling fuse box no. 1
B) Disassembling fuse box no. 2
C) Disassembling fuse box no. 3

A) Disassembling fuse box no. 1

Preliminary operations

- Disassemble the left side cover **(086803)**.

Disassembling fuse box no. 1

1. Disconnect fuse box no. 1 (**A-Fig.1**) from the fixing bracket (**B-Fig.1**) by unscrewing the 2 fixing screws (**C-Fig.1**).
2. Disconnect the various connections on fuse box no. 1.

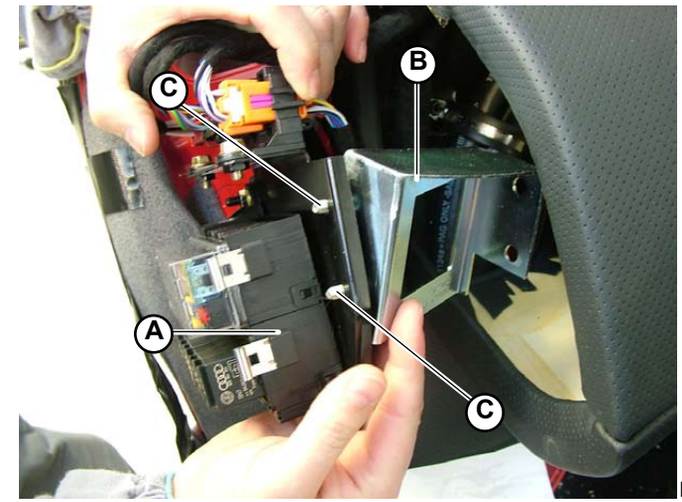

Fig.1

® Automobili Lamborghini S.p.A.
The information and procedures published below are strictly confidential and exclusively for the Lamborghini Dealer Network and Authorized Service Points. All copyrights are property of Automobili Lamborghini S.p.A based on copyright law. All of the PDF chapters in the WEB workshop manuals described below are based on information available at the time of publication. The company reserves the right to make updates and modifications. The following are prohibited: reprinting, reproduction, forwarding to unauthorized people and/or third parties, and translation, including partial, without written authorization from Automobili Lamborghini S.p.A.

B) Disassembling fuse box no. 2

Preliminary operations

- Remove the footboards passenger side.

Disassembling fuse box no. 2

1. Disconnect fuse box no. 2 (**A-Fig.2**) from the fixing bracket (**B-Fig.2**) by unscrewing the 3 fixing screws (**C-Fig.2**).
2. Disconnect the various connections on fuse box no. 2.

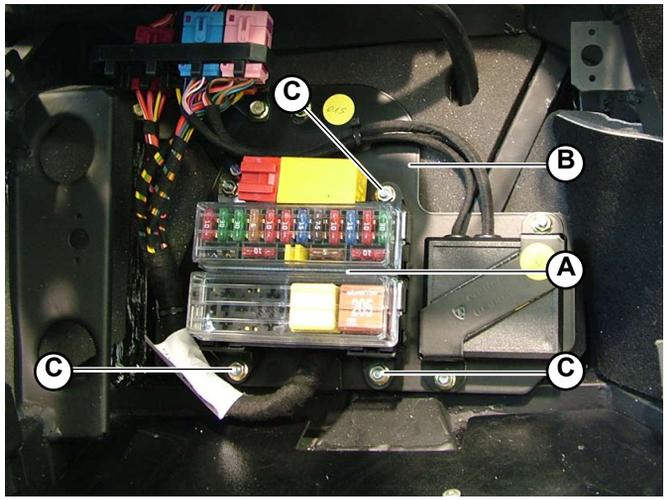

Fig.2

C) Disassembling fuse box no. 3

Preliminary operations

- Remove the rear cover (bottom) on the driver seat **(086803)**.

Disassembling fuse box no. 3

1. Disconnect fuse box no. 3 (**A-Fig.3**) from the fixing bracket by unscrewing the 4 side fixing screws (**B-Fig.3**).
2. Disconnect the various connections on fuse box no. 3.

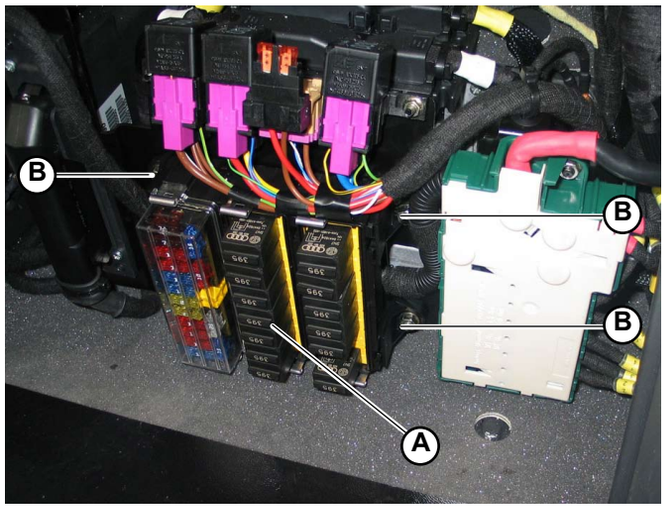

Fig.3

® Automobili Lamborghini S.p.A.
The information and procedures published below are strictly confidential and exclusively for the Lamborghini Dealer Network and Authorized Service Points. All copyrights are property of Automobili Lamborghini S.p.A based on copyright law. All of the PDF chapters in the WEB workshop manuals described below are based on information available at the time of publication. The company reserves the right to make updates and modifications. The following are prohibited: reprinting, reproduction, forwarding to unauthorized people and/or third parties, and translation, including partial, without written authorization from Automobili Lamborghini S.p.A.

This section explains how to assemble:

A) Assembling fuse box no. 1
B) Assembling fuse box no. 2
C) Assembling fuse box no. 3

A) Assembling fuse box no. 1

1. Connect fuse box no. 1 (**A-Fig.1**) to the fixing bracket (**B-Fig.1**) by acting on the 2 fixing screws (**C-Fig.1**).
2. Connect the various connections on fuse box no. 1.

- Assemble the left side cover **(086805)**.

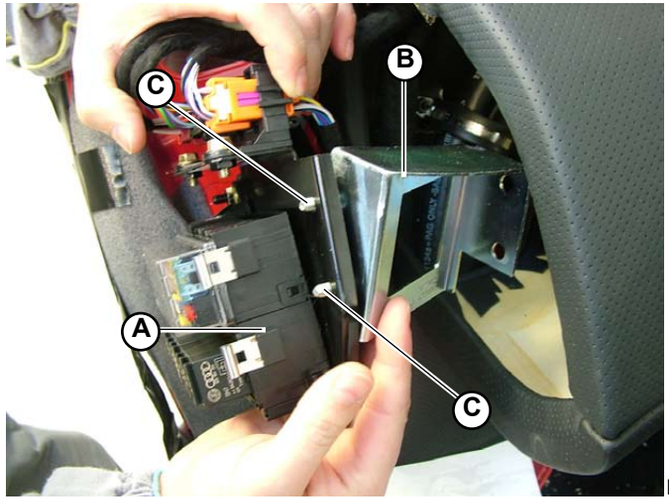

Fig.1

® Automobili Lamborghini S.p.A.
The information and procedures published below are strictly confidential and exclusively for the Lamborghini Dealer Network and Authorized Service Points. All copyrights are property of Automobili Lamborghini S.p.A based on copyright law. All of the PDF chapters in the WEB workshop manuals described below are based on information available at the time of publication. The company reserves the right to make updates and modifications. The following are prohibited: reprinting, reproduction, forwarding to unauthorized people and/or third parties, and translation, including partial, without written authorization from Automobili Lamborghini S.p.A.

B) Assembling fuse box no. 2

1. Connect fuse box no. 2 (**A-Fig.2**) to the fixing bracket (**B-Fig.2**) by acting on the 3 fixing screws (**C-Fig.2**).
2. Connect the various connections on fuse box no. 2.

- Position the footboard passenger side.

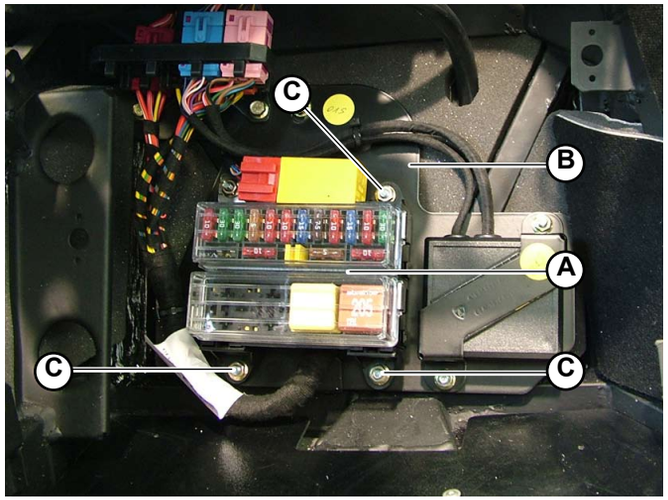

Fig.2

C) Assembling fuse box no. 3

1. Connect fuse box no. 3 (**A-Fig.3**) to the fixing bracket by acting on the 4 side fixing screws (**B-Fig.3**).
2. Connect the various connections on fuse box no. 3.

- Assemble the rear cover (bottom) on the driver seat **(086805)**.

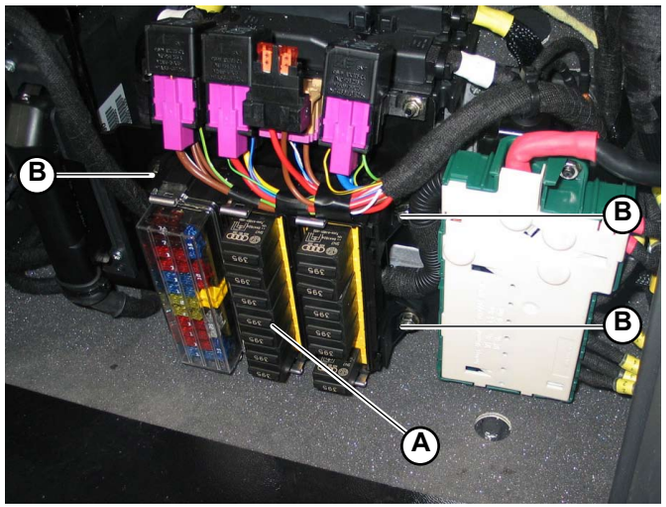

Fig.3

® Automobili Lamborghini S.p.A.
The information and procedures published below are strictly confidential and exclusively for the Lamborghini Dealer Network and Authorized Service Points. All copyrights are property of Automobili Lamborghini S.p.A based on copyright law. All of the PDF chapters in the WEB workshop manuals described below are based on information available at the time of publication. The company reserves the right to make updates and modifications. The following are prohibited: reprinting, reproduction, forwarding to unauthorized people and/or third parties, and translation, including partial, without written authorization from Automobili Lamborghini S.p.A.

Disassembling the side car hi-fi system loudspeakers

1. Lift carefully the cover of the loudspeaker and remove.
2. Unscrew the 4 screws (**A-Fig.1**) to release the loudspeaker from the door.
3. Disconnect the connections connected to the loudspeaker.
4. Remove the loudspeaker.

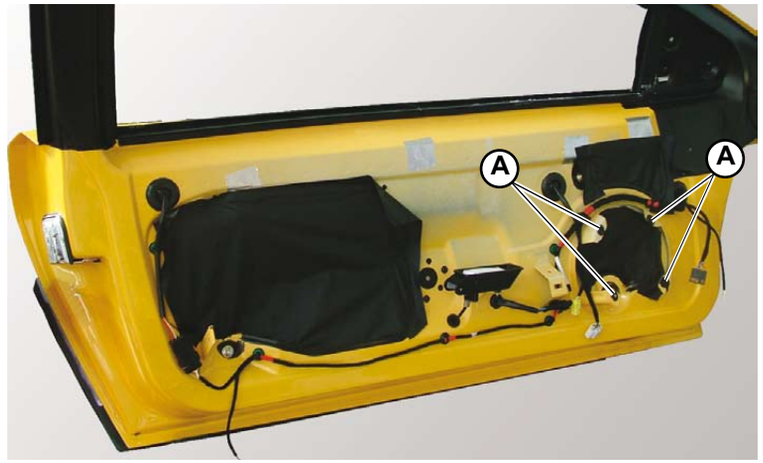

Fig.1

Disassembling the car hi-fi

1. Remove the car hi-fi from the air conditioner grille after disconnecting the connections on the front panel using the key.
2. Disconnect the connectors (**Fig.2**) on the rear of the car hi-fi.

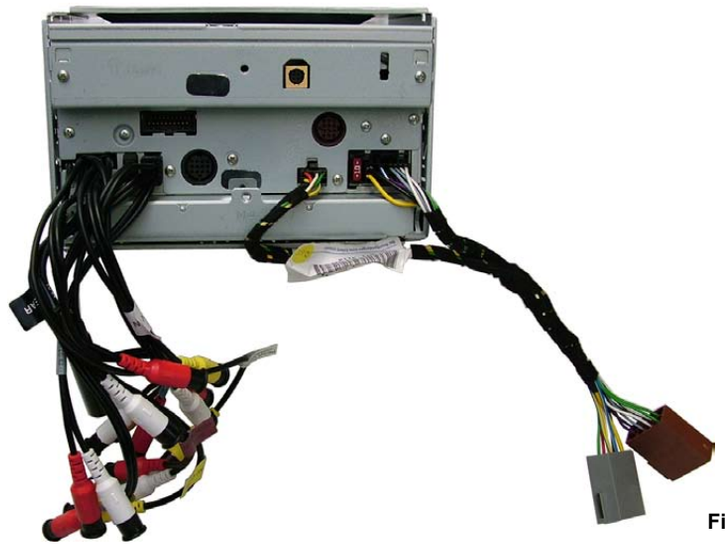

Fig.2

® Automobili Lamborghini S.p.A.
The information and procedures published below are strictly confidential and exclusively for the Lamborghini Dealer Network and Authorized Service Points. All copyrights are property of Automobili Lamborghini S.p.A based on copyright law. All of the PDF chapters in the WEB workshop manuals described below are based on information available at the time of publication. The company reserves the right to make updates and modifications. The following are prohibited: reprinting, reproduction, forwarding to unauthorized people and/or third parties, and translation, including partial, without written authorization from Automobili Lamborghini S.p.A.

Assembling the hi-fi system loudspeakers located in the doorpanel

1. Connect the loudspeaker connections
2. Position the loudspeaker and fix to the door using the 4 screws (**A-Fig.1**).
3. Insert the mesh covering the loudspeakers.

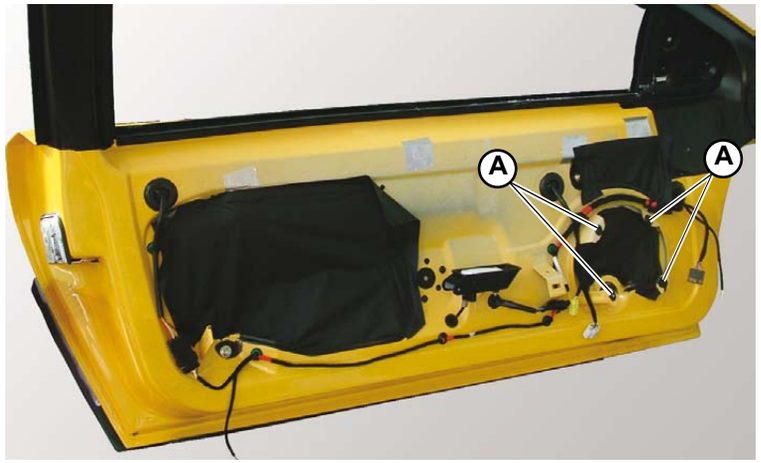

Fig.1

Assembling the car hi-fi

1. Connect the connectors (**Fig.2**) on the rear of the car hi-fi.
2. Insert the car hi-fi into the air conditioner grille and secure in position using the keys.

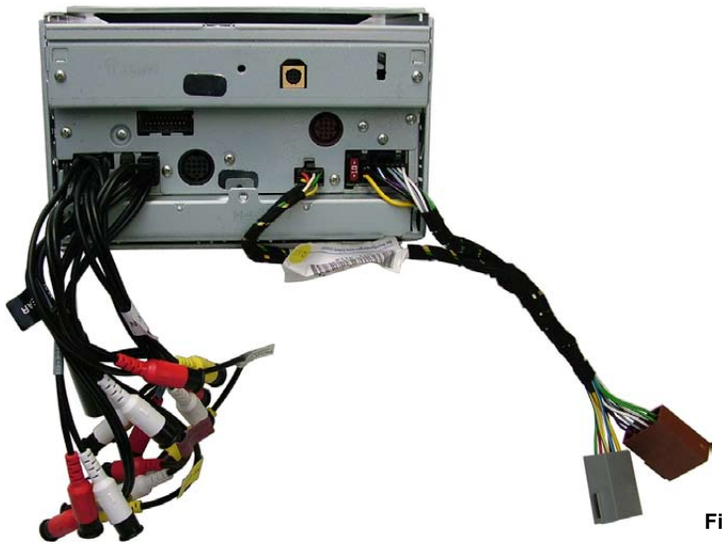

Fig.2

® Automobili Lamborghini S.p.A.
The information and procedures published below are strictly confidential and exclusively for the Lamborghini Dealer Network and Authorized Service Points. All copyrights are property of Automobili Lamborghini S.p.A based on copyright law. All of the PDF chapters in the WEB workshop manuals described below are based on information available at the time of publication. The company reserves the right to make updates and modifications. The following are prohibited: reprinting, reproduction, forwarding to unauthorized people and/or third parties, and translation, including partial, without written authorization from Automobili Lamborghini S.p.A.

GFA Control Unit

The GFA control unit (Auxiliary Functions Management) is an on board computer that manages the operation of many devices. The GFA is connected by CAN line to the LIE engine control unit and to the PCM control unit, and co-ordinates and manages many operations, especially concerning diagnostics.

The main functions controlled or coordinated by the GFA control unit are:

- Cutting out accessory devices when the engine oil pressure is below 1 bar (pressure switch contact closed);
- Key inserted check and buzzer activation if the key is inserted and the driver's door open after at least one KEY ON;
- Check of light intensity on the instrument panel;
- Lights on check, activating the buzzer if lights are on, key inserted and driver's door open;
- Check on driver's side seat belt with timed activation of buzzer and key inserted warning light;
- Passenger compartment light check;
- Exhaust gas temperature in catalytic converter check (see GR.15 .– Engine Control);
- Instruments (fuel level indicator) and other indicators check;
- Front differential temperature check;
- Lifting system check;
- OBDII management (Engine Error);
- OBDII management (Gearbox Error **USA version**).

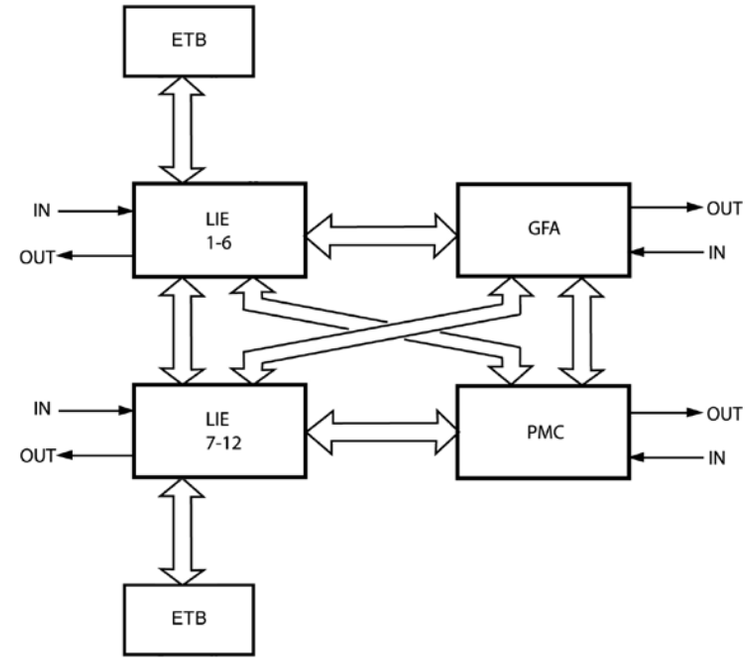

Fig.1

® Automobili Lamborghini S.p.A.
The information and procedures published below are strictly confidential and exclusively for the Lamborghini Dealer Network and Authorized Service Points. All copyrights are property of Automobili Lamborghini S.p.A based on copyright law. All of the PDF chapters in the WEB workshop manuals described below are based on information available at the time of publication. The company reserves the right to make updates and modifications. The following are prohibited: reprinting, reproduction, forwarding to unauthorized people and/or third parties, and translation, including partial, without written authorization from Automobili Lamborghini S.p.A.

This section explains how to disassemble:

A) GFA control unit
B) Indicator light control unit
C) Electric window control unit
D) MED control unit
E) Cold junction control unit
F) Light control unit
G) E-Gear control unit
H) Injection control unit
I) PMC (Power Motor Control) control unit
L) Central door locking control unit
M) Wiper system control unit
N) Central ornament control unit
O) ETB control units

® Automobili Lamborghini S.p.A.
The information and procedures published below are strictly confidential and exclusively for the Lamborghini Dealer Network and Authorized Service Points. All copyrights are property of Automobili Lamborghini S.p.A based on copyright law. All of the PDF chapters in the WEB workshop manuals described below are based on information available at the time of publication. The company reserves the right to make updates and modifications. The following are prohibited: reprinting, reproduction, forwarding to unauthorized people and/or third parties, and translation, including partial, without written authorization from Automobili Lamborghini S.p.A.

A) Disassembling the GFA control unit

Preliminary operations

- Disassemble the dashboard cover **(086803)**.

Disassembling the control unit

1. Unscrew the screws (**A-Fig.1**) securing the GFA (**B-Fig.1**) to the chassis.
2. Disconnect the indicator light control unit (**C-Fig.1**)**(Point B)**.
3. Disconnect the side connections (**D-Fig.1**).
4. Cut the air conditioner pipe clamp (**E-Fig.1**).
5. Remove the GFA.

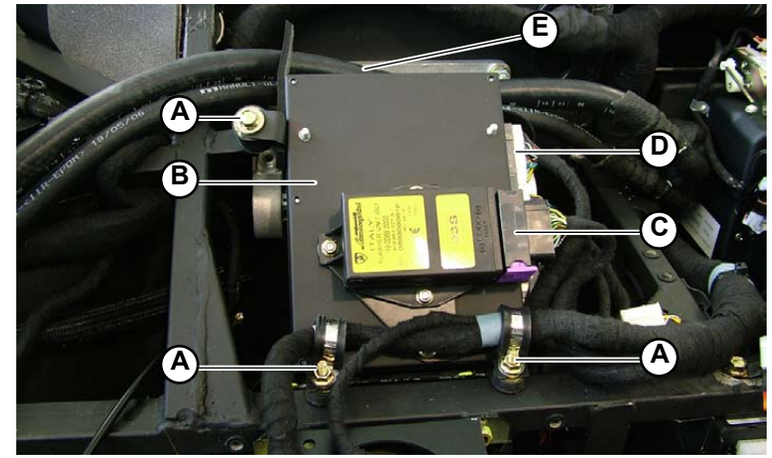

Fig.1

® Automobili Lamborghini S.p.A.
The information and procedures published below are strictly confidential and exclusively for the Lamborghini Dealer Network and Authorized Service Points. All copyrights are property of Automobili Lamborghini S.p.A based on copyright law. All of the PDF chapters in the WEB workshop manuals described below are based on information available at the time of publication. The company reserves the right to make updates and modifications. The following are prohibited: reprinting, reproduction, forwarding to unauthorized people and/or third parties, and translation, including partial, without written authorization from Automobili Lamborghini S.p.A.

B) Disassembling the indicator light control unit

Preliminary operations

- Disassemble the dashboard cover **(086803)**.

Disassembling the control unit

1. Detach the indicator light control unit (**A-Fig.2**) from the connection (**B-Fig.2**) located above the GFA control unit.
2. Unscrew the screws (**C-Fig.2**).
3. Remove the control unit.

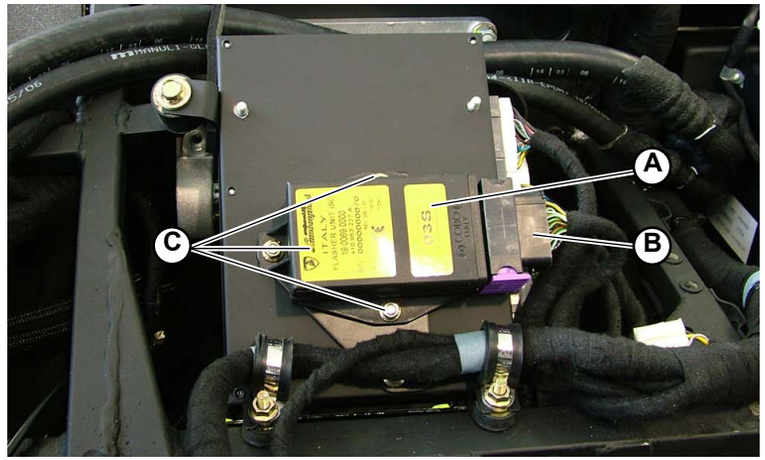

Fig.2

® Automobili Lamborghini S.p.A.
The information and procedures published below are strictly confidential and exclusively for the Lamborghini Dealer Network and Authorized Service Points. All copyrights are property of Automobili Lamborghini S.p.A based on copyright law. All of the PDF chapters in the WEB workshop manuals described below are based on information available at the time of publication. The company reserves the right to make updates and modifications. The following are prohibited: reprinting, reproduction, forwarding to unauthorized people and/or third parties, and translation, including partial, without written authorization from Automobili Lamborghini S.p.A.

C) Disassembling the electric window control unit

Preliminary operations

- Disassemble the right and left sides of the central tunnel **(086303)**.

Disassembling the control unit

1. Disconnect the control unit (**B-Fig.3**) connections (**A-Fig.3**).
2. Unscrew the control unit fixing screw (**C-Fig.3**).
3. Remove the control unit.

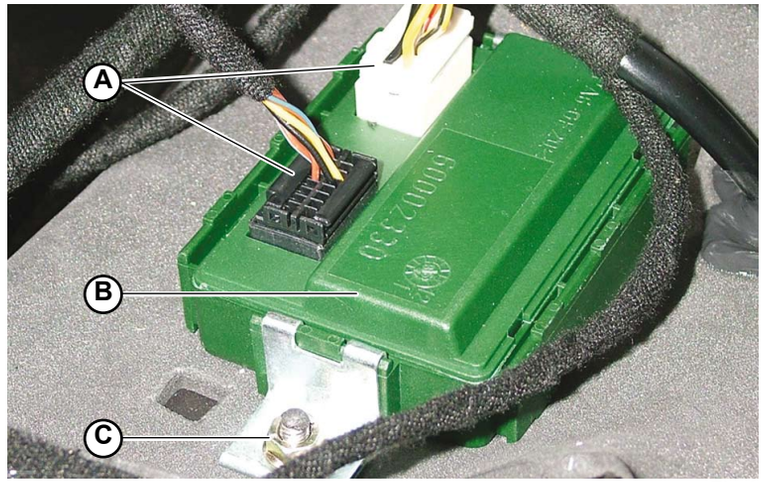

Fig.3

® Automobili Lamborghini S.p.A.
The information and procedures published below are strictly confidential and exclusively for the Lamborghini Dealer Network and Authorized Service Points. All copyrights are property of Automobili Lamborghini S.p.A based on copyright law. All of the PDF chapters in the WEB workshop manuals described below are based on information available at the time of publication. The company reserves the right to make updates and modifications. The following are prohibited: reprinting, reproduction, forwarding to unauthorized people and/or third parties, and translation, including partial, without written authorization from Automobili Lamborghini S.p.A.

D) Disassembling the MED control unit

Preliminary operations

- Disassemble the right and left sides of the central tunnel **(086303)**.

Disassembling the control unit

1. Unscrew the screws (**A-Fig.4**) securing the MED control unit (**B-Fig.4**) to the bracket (**C-Fig.4**).
2. Disconnect the various connections (**D-Fig.4**) connected to the MED control unit.

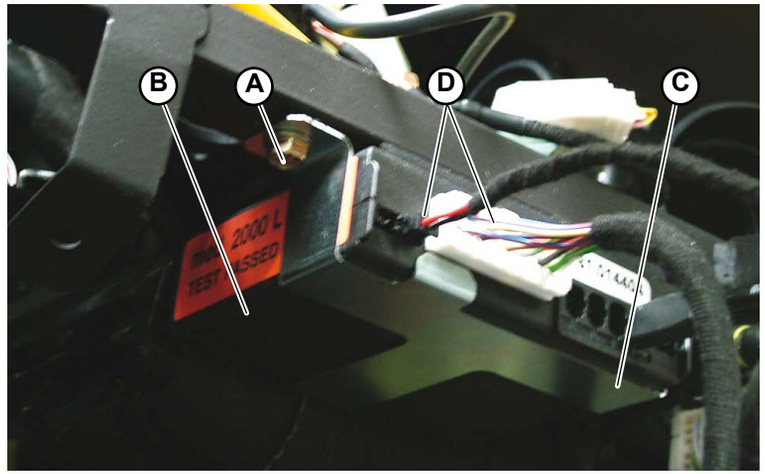

Fig.4

® Automobili Lamborghini S.p.A.
The information and procedures published below are strictly confidential and exclusively for the Lamborghini Dealer Network and Authorized Service Points. All copyrights are property of Automobili Lamborghini S.p.A based on copyright law. All of the PDF chapters in the WEB workshop manuals described below are based on information available at the time of publication. The company reserves the right to make updates and modifications. The following are prohibited: reprinting, reproduction, forwarding to unauthorized people and/or third parties, and translation, including partial, without written authorization from Automobili Lamborghini S.p.A.

E) Disassembling the cold junction control unit

1. Access through the rear hood and disassemble the cold junction control unit (**A-Fig.5**) by disconnecting the connection (**B-Fig.5**) and unscrewing the 2 screws (**C-Fig.5**) securing the control unit to the car.
   The control unit is located at the rear left of the car.

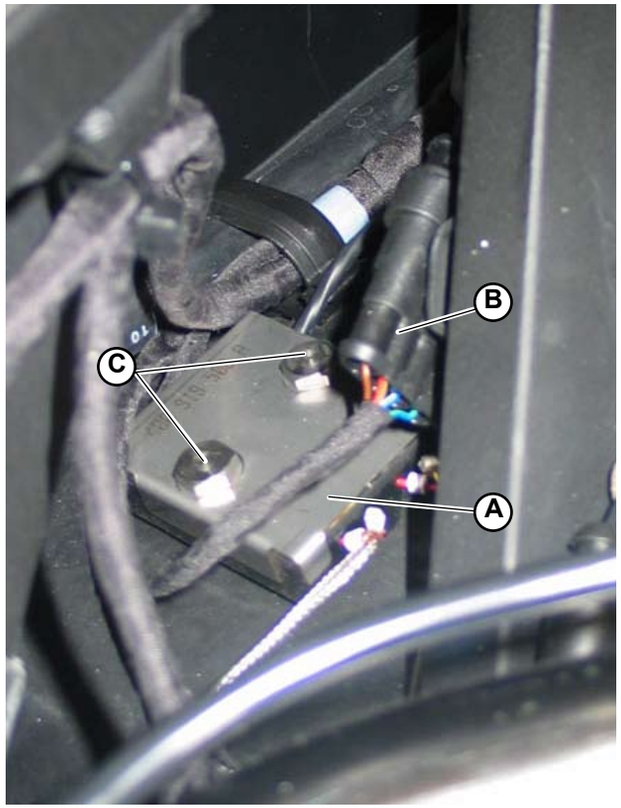

Fig.5

® Automobili Lamborghini S.p.A.
The information and procedures published below are strictly confidential and exclusively for the Lamborghini Dealer Network and Authorized Service Points. All copyrights are property of Automobili Lamborghini S.p.A based on copyright law. All of the PDF chapters in the WEB workshop manuals described below are based on information available at the time of publication. The company reserves the right to make updates and modifications. The following are prohibited: reprinting, reproduction, forwarding to unauthorized people and/or third parties, and translation, including partial, without written authorization from Automobili Lamborghini S.p.A.

F) Disassembling the light control unit

Preliminary operations

- Disassemble the left side cover **(086803)**.

Disassembling the control unit

1. Disconnect the 2 connections (**A-Fig.6**) connected to the light control unit.
2. Unscrew the 2 screws (**B-Fig.6**) securing the light control unit (**C-Fig.6/7**) to the dashboard (**D-Fig.7**).
3. Remove the light control unit.

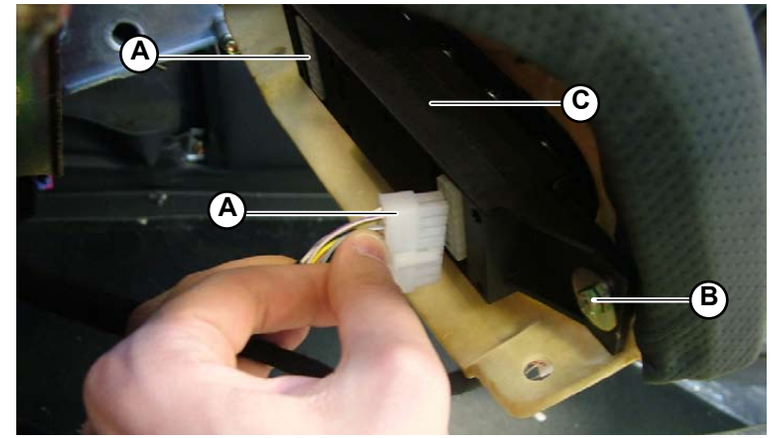

Fig.6

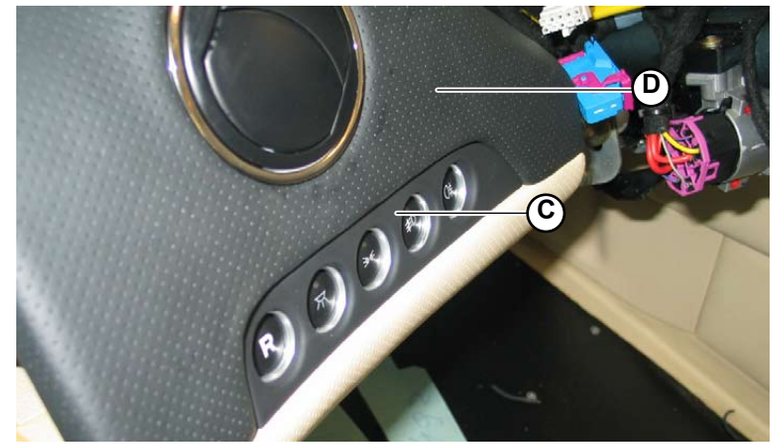

Fig.7

® Automobili Lamborghini S.p.A.
The information and procedures published below are strictly confidential and exclusively for the Lamborghini Dealer Network and Authorized Service Points. All copyrights are property of Automobili Lamborghini S.p.A based on copyright law. All of the PDF chapters in the WEB workshop manuals described below are based on information available at the time of publication. The company reserves the right to make updates and modifications. The following are prohibited: reprinting, reproduction, forwarding to unauthorized people and/or third parties, and translation, including partial, without written authorization from Automobili Lamborghini S.p.A.

G) Disassembling the E-Gear control unit

Preliminary operations

- Remove the seat rear cover (bottom – passenger side) **(086803)**.

Disassembling the control unit

1. Remove the 2 screws (**A-Fig.8**) securing the 2 fixing brackets (**B-Fig.8**) to the vehicle bottom.
2. Disconnect the 2 connections (**C-Fig.8**).
3. Remove the E-Gear control unit (**D-Fig.8**).

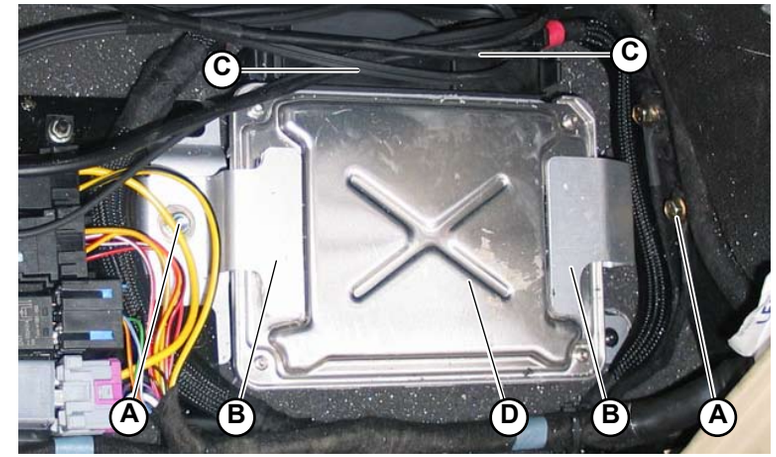

Fig.8

® Automobili Lamborghini S.p.A.
The information and procedures published below are strictly confidential and exclusively for the Lamborghini Dealer Network and Authorized Service Points. All copyrights are property of Automobili Lamborghini S.p.A based on copyright law. All of the PDF chapters in the WEB workshop manuals described below are based on information available at the time of publication. The company reserves the right to make updates and modifications. The following are prohibited: reprinting, reproduction, forwarding to unauthorized people and/or third parties, and translation, including partial, without written authorization from Automobili Lamborghini S.p.A.

H) Disassembling the injection control unit.

Preliminary operations

- Remove the seat rear cover (driver side) **(086803)**.

Disassembling the control unit

1. Disconnect the fuse box.
2. Disconnect the 4 connectors connected to the injection control unit.
   - The 2 connectors with the white clamp (**A-Fig.9**) control injection on cylinder bank 1-6.
   - The 2 connectors with the yellow clamp (**B-Fig.9**) control injection on cylinder bank 7-12.
3. Disconnect the injection control unit below the 4 connectors and remove.

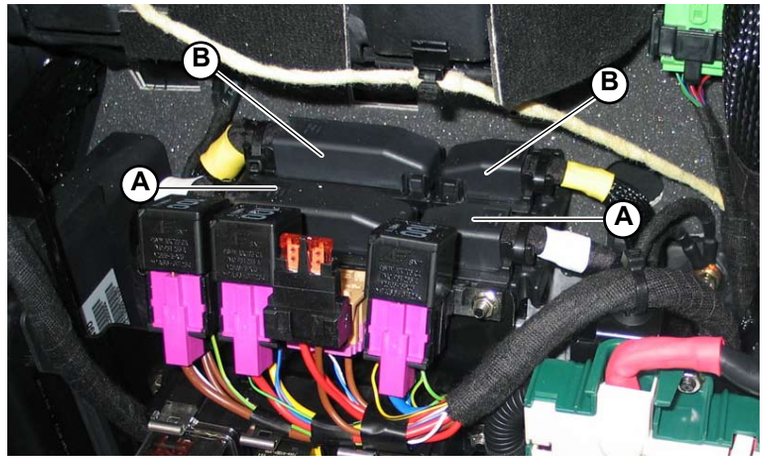

Fig.9

® Automobili Lamborghini S.p.A.
The information and procedures published below are strictly confidential and exclusively for the Lamborghini Dealer Network and Authorized Service Points. All copyrights are property of Automobili Lamborghini S.p.A based on copyright law. All of the PDF chapters in the WEB workshop manuals described below are based on information available at the time of publication. The company reserves the right to make updates and modifications. The following are prohibited: reprinting, reproduction, forwarding to unauthorized people and/or third parties, and translation, including partial, without written authorization from Automobili Lamborghini S.p.A.

I) Disassembling the PMC (Power Motor Control) control unit

Preliminary operations

- Remove the seat rear cover (bottom – driver side) **(086803)**.

Disassembling the control unit

1. Disconnect the connector (**A-Fig.10**).
2. Unscrew the 2 screws (**B-Fig.10**) securing the PMC control unit (**C-Fig.10**) to the bracket (**D-Fig.10**).
3. Remove the PMC control unit.

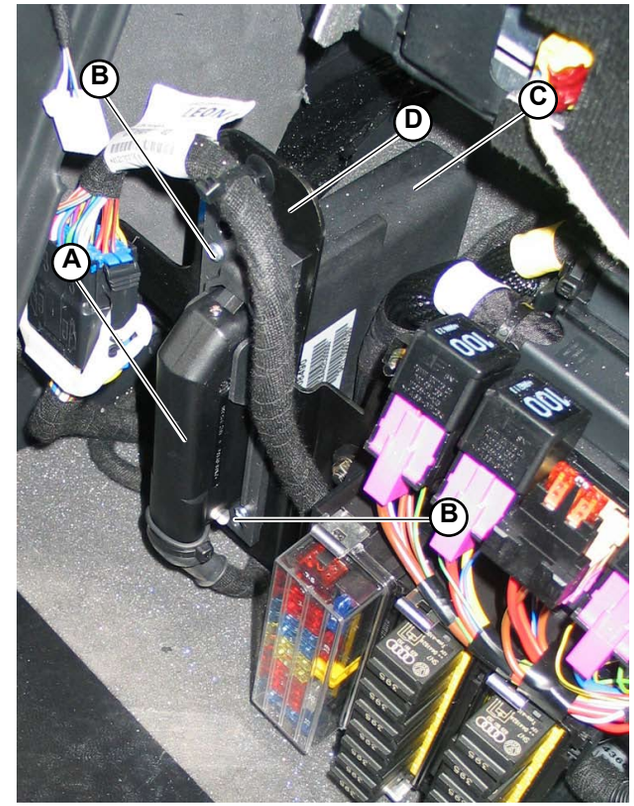

Fig.10

® Automobili Lamborghini S.p.A.
The information and procedures published below are strictly confidential and exclusively for the Lamborghini Dealer Network and Authorized Service Points. All copyrights are property of Automobili Lamborghini S.p.A based on copyright law. All of the PDF chapters in the WEB workshop manuals described below are based on information available at the time of publication. The company reserves the right to make updates and modifications. The following are prohibited: reprinting, reproduction, forwarding to unauthorized people and/or third parties, and translation, including partial, without written authorization from Automobili Lamborghini S.p.A.

L) Disassembling the central door locking control unit

Preliminary operations

- Remove the footboard passenger side.

Disassembling the control unit

1. Detach the door central locking control unit (**A-Fig.11**) from the connection (**B-Fig.11**) located above the fuse box.

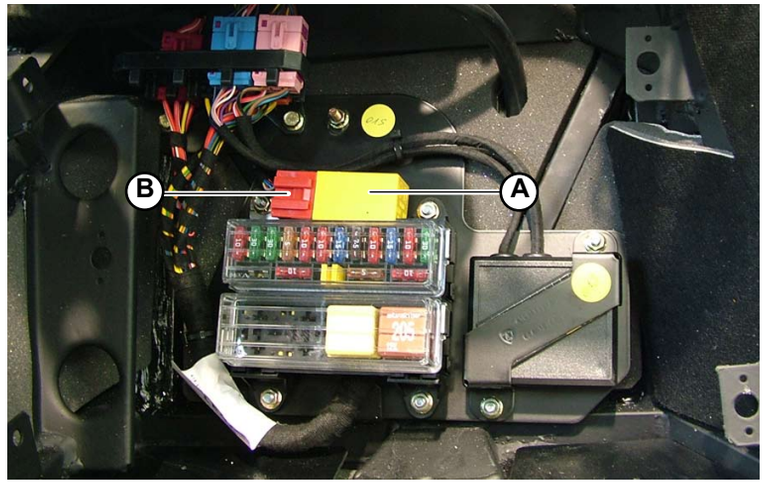

Fig.11

® Automobili Lamborghini S.p.A.
The information and procedures published below are strictly confidential and exclusively for the Lamborghini Dealer Network and Authorized Service Points. All copyrights are property of Automobili Lamborghini S.p.A based on copyright law. All of the PDF chapters in the WEB workshop manuals described below are based on information available at the time of publication. The company reserves the right to make updates and modifications. The following are prohibited: reprinting, reproduction, forwarding to unauthorized people and/or third parties, and translation, including partial, without written authorization from Automobili Lamborghini S.p.A.

M) Disassembling the wiper system control unit

Preliminary operations

- Remove the footboard passenger side.

Disassembling the control unit

1. Disconnect the connectors (**A-Fig.11a**).
2. Unscrew the 2 screws (**B-Fig.11a**) securing the control unit (**C-Fig.11a**) to the bracket.
3. Remove the control unit.

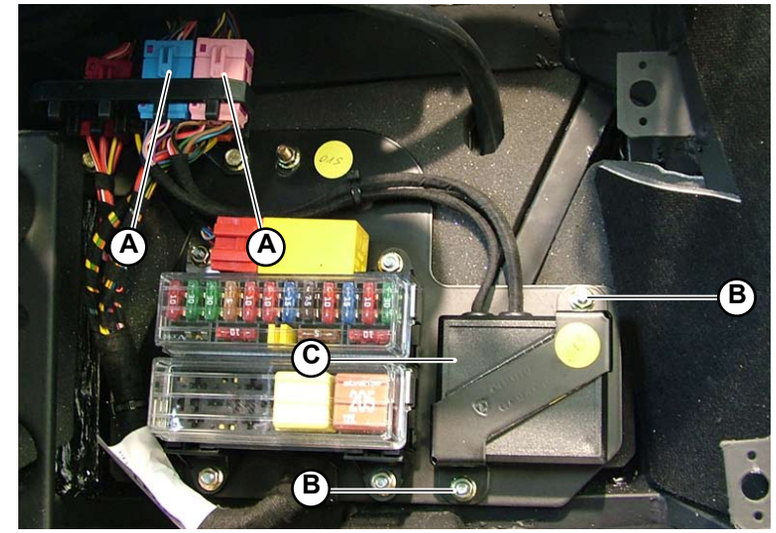

Fig.11a

® Automobili Lamborghini S.p.A.
The information and procedures published below are strictly confidential and exclusively for the Lamborghini Dealer Network and Authorized Service Points. All copyrights are property of Automobili Lamborghini S.p.A based on copyright law. All of the PDF chapters in the WEB workshop manuals described below are based on information available at the time of publication. The company reserves the right to make updates and modifications. The following are prohibited: reprinting, reproduction, forwarding to unauthorized people and/or third parties, and translation, including partial, without written authorization from Automobili Lamborghini S.p.A.

N) Disassembling the central ornament control units

Preliminary operations

- Remove the tunnel ornament **(086303)**.

Disassembling central ornament control unit no. 1

Control unit no. 1 controls:

- **Lifting system (A-Fig. 12)**
- **TCS (B-Fig. 12)**
- **Open/close VACS (C-Fig. 12)**

1. Disconnect the connector (**D-Fig.13**).
2. Unscrew the 4 screws (**E-Fig.13**) securing control unit no. 1 (**F-Fig.13**) to the central ornament (**G-Fig.13**).
3. Remove the control unit.

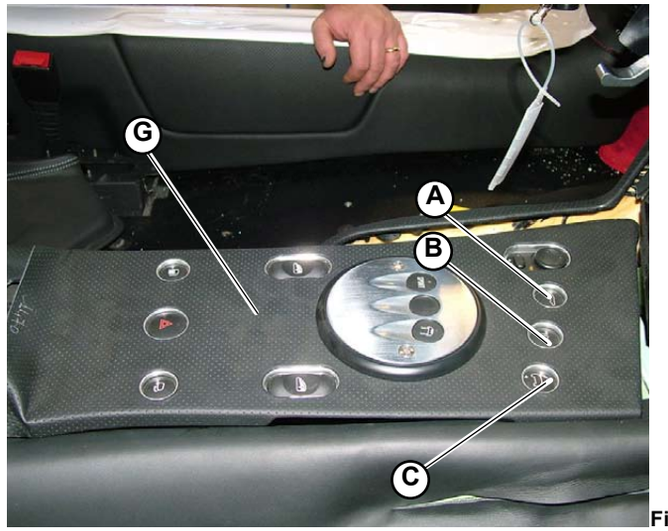

Fig.12

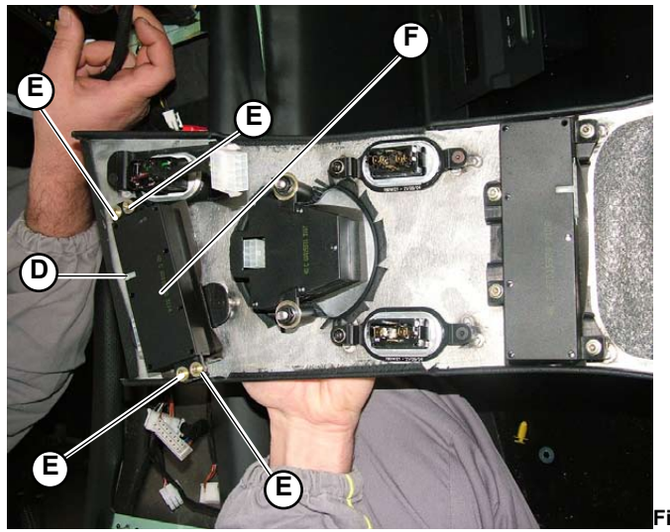

Fig.13

® Automobili Lamborghini S.p.A.
The information and procedures published below are strictly confidential and exclusively for the Lamborghini Dealer Network and Authorized Service Points. All copyrights are property of Automobili Lamborghini S.p.A based on copyright law. All of the PDF chapters in the WEB workshop manuals described below are based on information available at the time of publication. The company reserves the right to make updates and modifications. The following are prohibited: reprinting, reproduction, forwarding to unauthorized people and/or third parties, and translation, including partial, without written authorization from Automobili Lamborghini S.p.A.

Disassembling central ornament control unit no. 2

Control unit no. 2 controls:

- **Open/close petrol flap (A-Fig. 14)**
- **Hazard lights (B-Fig. 14)**
- **Open/close mirror (C-Fig. 14)**

1. Disconnect the connector (**D-Fig.15**).
2. Unscrew the 4 screws (**E-Fig.15**) securing control unit no. 2 (**F-Fig.15**) to the central ornament (**G-Fig.15**).
3. Remove the control unit.

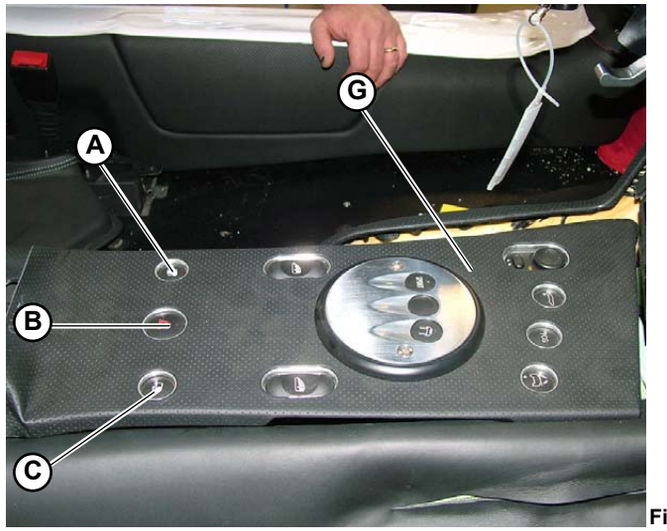

Fig.14

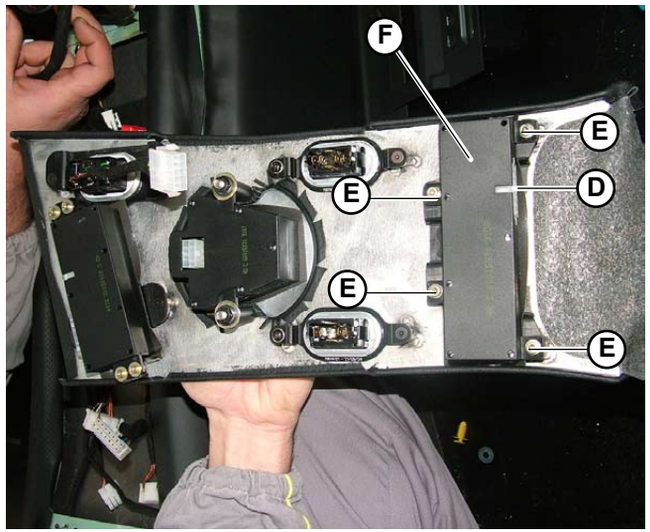

Fig.15

® Automobili Lamborghini S.p.A.
The information and procedures published below are strictly confidential and exclusively for the Lamborghini Dealer Network and Authorized Service Points. All copyrights are property of Automobili Lamborghini S.p.A based on copyright law. All of the PDF chapters in the WEB workshop manuals described below are based on information available at the time of publication. The company reserves the right to make updates and modifications. The following are prohibited: reprinting, reproduction, forwarding to unauthorized people and/or third parties, and translation, including partial, without written authorization from Automobili Lamborghini S.p.A.

O) Disassembling the ETB control units

Preliminary operations

- Disassemble the engine compartment left side panel **(081303)**.
- Disassemble the air filter unit **(013303)**.

Disassembling the control unit

1. Disconnect the 2 connections (**A-Fig.16**).
2. Unscrew the 2 screws (**B-Fig.16**) securing the bracket.
3. Remove the bracket and the control units.
2. Unscrew the 4 nuts (**C-Fig.16**) securing the control units to the bracket (2 per side).
3. Remove the ETB control units.

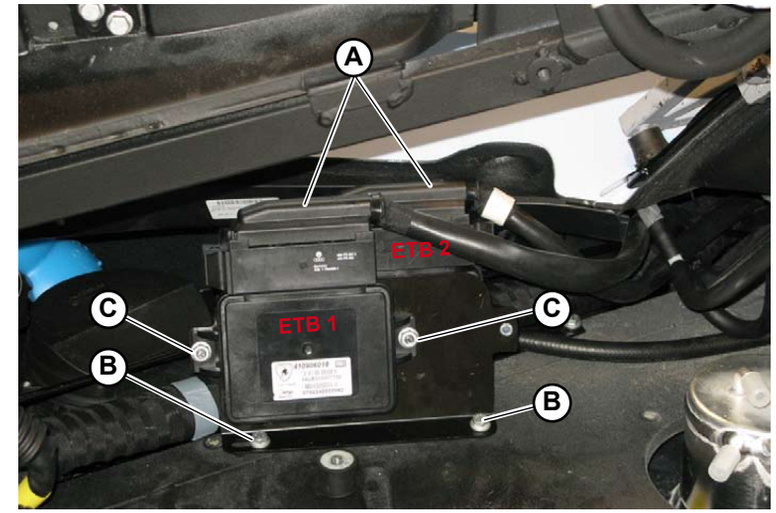

Fig.16

® Automobili Lamborghini S.p.A.
The information and procedures published below are strictly confidential and exclusively for the Lamborghini Dealer Network and Authorized Service Points. All copyrights are property of Automobili Lamborghini S.p.A based on copyright law. All of the PDF chapters in the WEB workshop manuals described below are based on information available at the time of publication. The company reserves the right to make updates and modifications. The following are prohibited: reprinting, reproduction, forwarding to unauthorized people and/or third parties, and translation, including partial, without written authorization from Automobili Lamborghini S.p.A.

This section explains how to assemble:

A) GFA control unit
B) Indicator light control unit
C) Electric window control unit
D) MED control unit
E) Cold junction control unit
F) Light control unit
G) E-Gear control unit
H) Injection control unit
I) PMC (Power Motor Control) control unit
L) Central door locking control unit
M) Wiper system control unit
N) Central ornament control unit
O) ETB control units

® Automobili Lamborghini S.p.A.
The information and procedures published below are strictly confidential and exclusively for the Lamborghini Dealer Network and Authorized Service Points. All copyrights are property of Automobili Lamborghini S.p.A based on copyright law. All of the PDF chapters in the WEB workshop manuals described below are based on information available at the time of publication. The company reserves the right to make updates and modifications. The following are prohibited: reprinting, reproduction, forwarding to unauthorized people and/or third parties, and translation, including partial, without written authorization from Automobili Lamborghini S.p.A.

A) Assembling the GFA control unit

1. Position the GFA (**A-Fig.1**).
2. Secure the GFA to the chassis using the screws (**B-Fig.1**).
3. Connect the indicator light control unit (**C-Fig.1**)**(Point B)**.
4. Connect the side connections (**D-Fig.1**).
5. Secure the air conditioner pipes using a clamp (**E-Fig.1**).

- Assemble the dashboard cover **(086805)**.

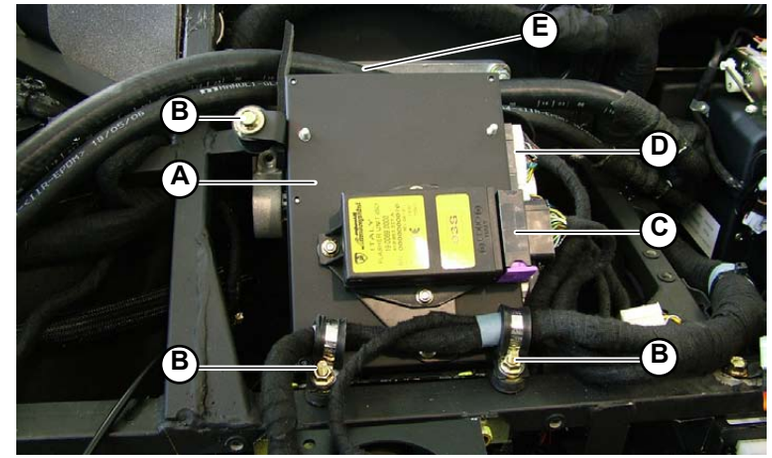

Fig.1

STOP **After assembling the new GFA ECU, write the car's VIN and check for updates using the LaRa-AS system (109000).**

STOP **Specific note for USA model:**
For USA version, codify the control unit using LaRa-AS (Automatic mode)(109000).

® Automobili Lamborghini S.p.A.
The information and procedures published below are strictly confidential and exclusively for the Lamborghini Dealer Network and Authorized Service Points. All copyrights are property of Automobili Lamborghini S.p.A based on copyright law. All of the PDF chapters in the WEB workshop manuals described below are based on information available at the time of publication. The company reserves the right to make updates and modifications. The following are prohibited: reprinting, reproduction, forwarding to unauthorized people and/or third parties, and translation, including partial, without written authorization from Automobili Lamborghini S.p.A.

B) Assembling the indicator light control unit

1. Connect the indicator light control unit (**A-Fig.2**) to the connection (**B-Fig.2**) located above the GFA control unit.
2. Secure the control unit using the screws (**C-Fig.2**).

- Assemble the dashboard cover **(086805)**.

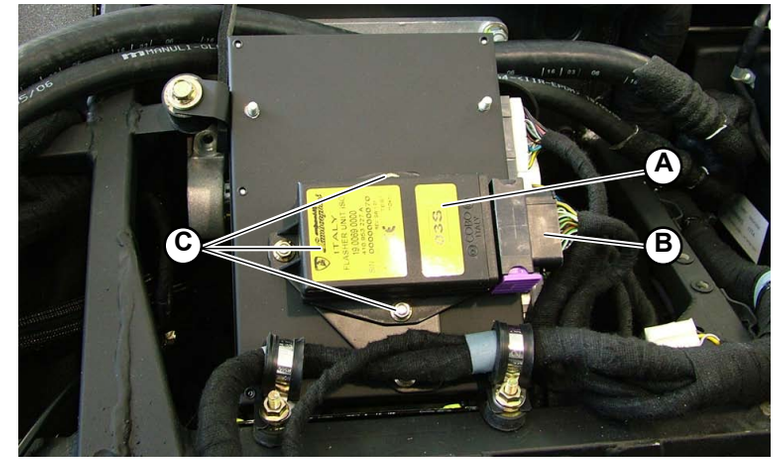

Fig.2

® Automobili Lamborghini S.p.A.
The information and procedures published below are strictly confidential and exclusively for the Lamborghini Dealer Network and Authorized Service Points. All copyrights are property of Automobili Lamborghini S.p.A based on copyright law. All of the PDF chapters in the WEB workshop manuals described below are based on information available at the time of publication. The company reserves the right to make updates and modifications. The following are prohibited: reprinting, reproduction, forwarding to unauthorized people and/or third parties, and translation, including partial, without written authorization from Automobili Lamborghini S.p.A.

C) Assembling the electric window control unit

1. Secure the control unit (**A-Fig.3**) using the fixing screw (**B-Fig.3**).
2. Connect the connections (**C-Fig.3**).

- Reassemble the right and left sides of the central tunnel **(086305)**.

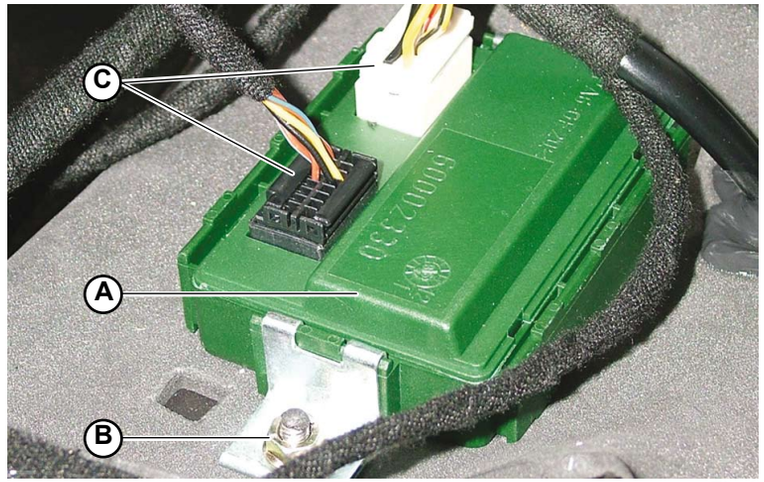

Fig.3

® Automobili Lamborghini S.p.A.
The information and procedures published below are strictly confidential and exclusively for the Lamborghini Dealer Network and Authorized Service Points. All copyrights are property of Automobili Lamborghini S.p.A based on copyright law. All of the PDF chapters in the WEB workshop manuals described below are based on information available at the time of publication. The company reserves the right to make updates and modifications. The following are prohibited: reprinting, reproduction, forwarding to unauthorized people and/or third parties, and translation, including partial, without written authorization from Automobili Lamborghini S.p.A.

D) Assembling the MED control unit

1. Use the 2 screws (**C-Fig.4**) to secure the MED control unit (**A-Fig.4**) to the bracket (**B-Fig.4**).
2. Connect the various connections (**D-Fig.4**) to the MED control unit.

- Reassemble the right and left sides of the central tunnel **(086305)**.

After assembling the new MED ECU, program so that the old MED valves can be recognized by the system (see MED ECU User and Maintenance Booklet supplied with the documentation on board). If the entire system is replaced, no programming is necessary.

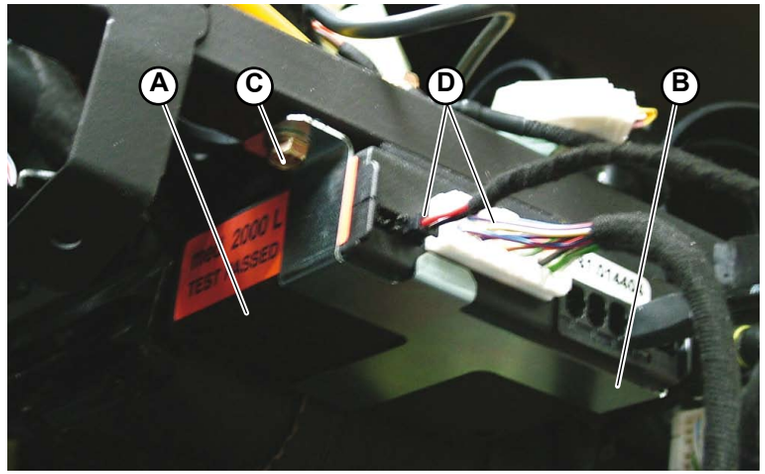

Fig.4

® Automobili Lamborghini S.p.A.
The information and procedures published below are strictly confidential and exclusively for the Lamborghini Dealer Network and Authorized Service Points. All copyrights are property of Automobili Lamborghini S.p.A based on copyright law. All of the PDF chapters in the WEB workshop manuals described below are based on information available at the time of publication. The company reserves the right to make updates and modifications. The following are prohibited: reprinting, reproduction, forwarding to unauthorized people and/or third parties, and translation, including partial, without written authorization from Automobili Lamborghini S.p.A.

E) Assembling the cold junction control unit

1. To secure the cold junction control unit (**A-Fig.5**) to the car, access through the rear hood and connect the connection (**B-Fig.5**) and tighten the 2 screws (**C-Fig.5**).
   The control unit is located at the rear left of the car.

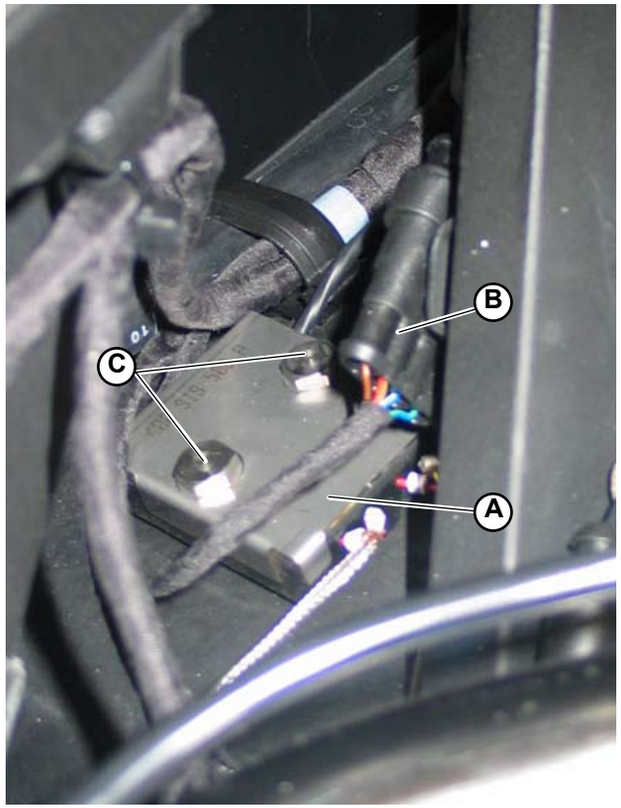

Fig.5

® Automobili Lamborghini S.p.A.
The information and procedures published below are strictly confidential and exclusively for the Lamborghini Dealer Network and Authorized Service Points. All copyrights are property of Automobili Lamborghini S.p.A based on copyright law. All of the PDF chapters in the WEB workshop manuals described below are based on information available at the time of publication. The company reserves the right to make updates and modifications. The following are prohibited: reprinting, reproduction, forwarding to unauthorized people and/or third parties, and translation, including partial, without written authorization from Automobili Lamborghini S.p.A.

F) Assembling the head light control unit

1. Use the 2 screws (**C-Fig.7**) to secure the head light control unit (**A-Fig.6/7**) to the dashboard (**B-Fig.7**).
2. Connect the 2 connections (**D-Fig.6**) to the head light control unit.

- Assemble the left side cover **(086805)**.

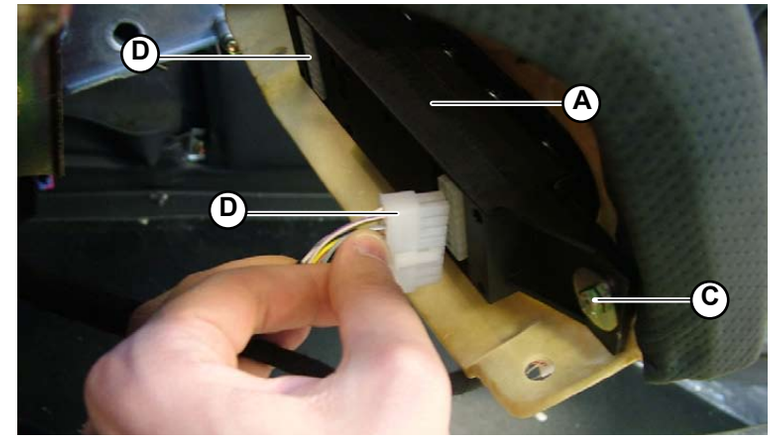

Fig.6

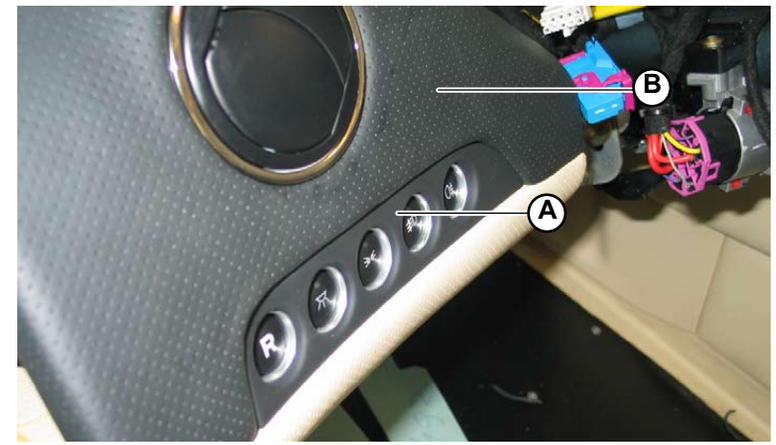

Fig.7

® Automobili Lamborghini S.p.A.
The information and procedures published below are strictly confidential and exclusively for the Lamborghini Dealer Network and Authorized Service Points. All copyrights are property of Automobili Lamborghini S.p.A based on copyright law. All of the PDF chapters in the WEB workshop manuals described below are based on information available at the time of publication. The company reserves the right to make updates and modifications. The following are prohibited: reprinting, reproduction, forwarding to unauthorized people and/or third parties, and translation, including partial, without written authorization from Automobili Lamborghini S.p.A.

G) Assembling the E-Gear control unit

1. To secure the E-Gear control unit (**A-Fig.8**) to the car floor, use the screws (**C-Fig.8**) to secure the 2 fixing brackets (**B-Fig.8**).
2. Connect the 2 connections (**D-Fig.8**).

- Assemble the seat rear cover (bottom – passenger side) **(086805)**.

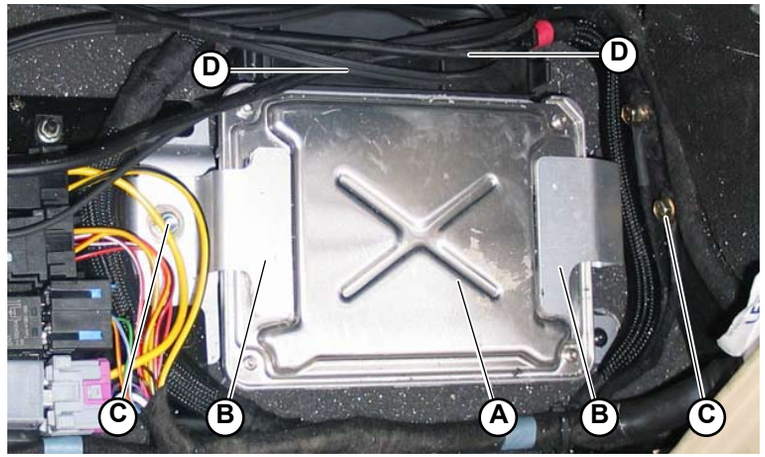

Fig.8

® Automobili Lamborghini S.p.A.
The information and procedures published below are strictly confidential and exclusively for the Lamborghini Dealer Network and Authorized Service Points. All copyrights are property of Automobili Lamborghini S.p.A based on copyright law. All of the PDF chapters in the WEB workshop manuals described below are based on information available at the time of publication. The company reserves the right to make updates and modifications. The following are prohibited: reprinting, reproduction, forwarding to unauthorized people and/or third parties, and translation, including partial, without written authorization from Automobili Lamborghini S.p.A.

H) Assembling the injection control unit.

1. Position the injection control unit.
2. Connect the 4 special connectors to the injection control unit.
   - The 2 connectors with the white clamp (**A-Fig.9**) control injection on cylinder bank 1-6.
   - The 2 connectors with the yellow clamp (**B-Fig.9**) control injection on cylinder bank 7-12.
3. Secure the front fuse box.

- Assemble the seat rear cover (bottom – driver side) **(086805)**.

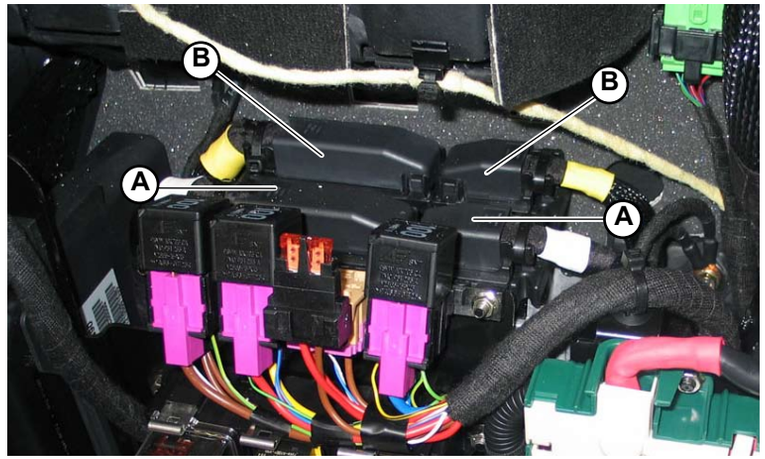

Fig.9

® Automobili Lamborghini S.p.A.
The information and procedures published below are strictly confidential and exclusively for the Lamborghini Dealer Network and Authorized Service Points. All copyrights are property of Automobili Lamborghini S.p.A based on copyright law. All of the PDF chapters in the WEB workshop manuals described below are based on information available at the time of publication. The company reserves the right to make updates and modifications. The following are prohibited: reprinting, reproduction, forwarding to unauthorized people and/or third parties, and translation, including partial, without written authorization from Automobili Lamborghini S.p.A.

I) Assembling the PMC (Power Motor Control) control unit

1. Use the 2 screws (**C-Fig.10**) to secure the PMC control unit (**A-Fig.10**) to the bracket (**B-Fig.10**).
2. Connect the connector (**D-Fig.10**).

- Assemble the seat rear cover (bottom – driver side) **(086805)**.

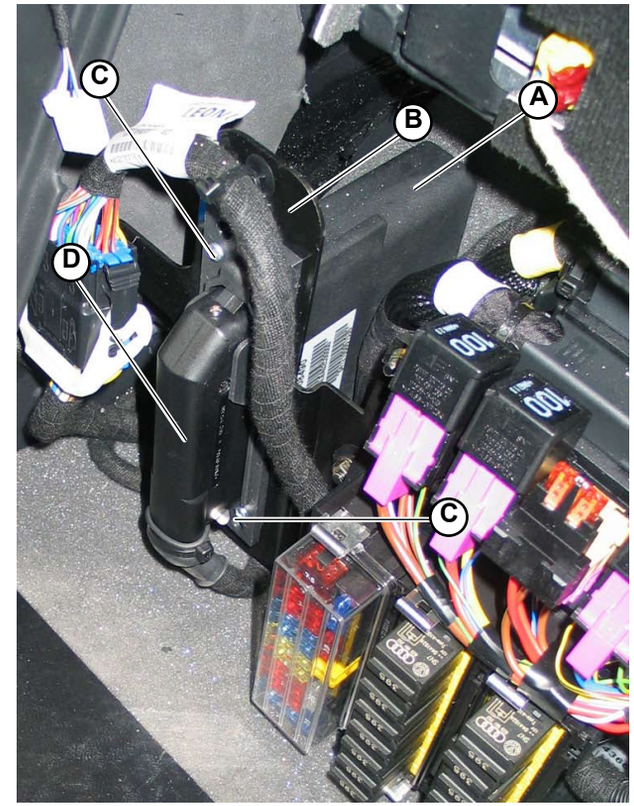

Fig.10

® Automobili Lamborghini S.p.A.
The information and procedures published below are strictly confidential and exclusively for the Lamborghini Dealer Network and Authorized Service Points. All copyrights are property of Automobili Lamborghini S.p.A based on copyright law. All of the PDF chapters in the WEB workshop manuals described below are based on information available at the time of publication. The company reserves the right to make updates and modifications. The following are prohibited: reprinting, reproduction, forwarding to unauthorized people and/or third parties, and translation, including partial, without written authorization from Automobili Lamborghini S.p.A.

L) Assembling the central door locking control unit

1. Connect the door central locking control unit (**A-Fig.11**) to the connection (**B-Fig.11**) located above the fuse box.

- Position the footboard passenger side.

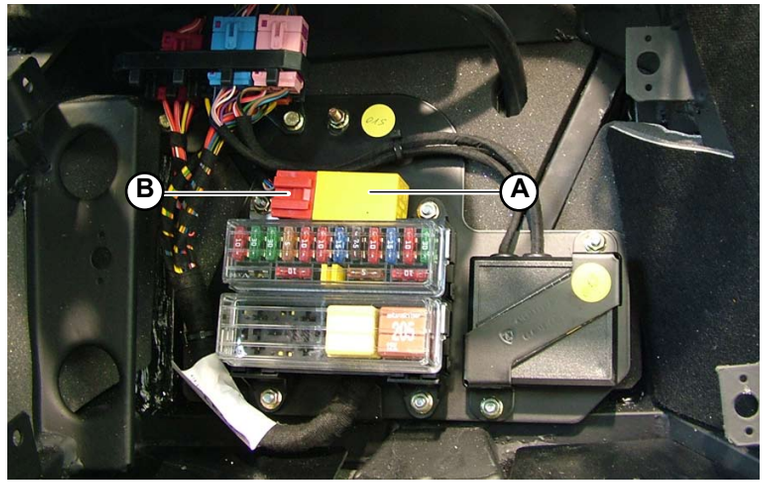

Fig.11

® Automobili Lamborghini S.p.A.
The information and procedures published below are strictly confidential and exclusively for the Lamborghini Dealer Network and Authorized Service Points. All copyrights are property of Automobili Lamborghini S.p.A based on copyright law. All of the PDF chapters in the WEB workshop manuals described below are based on information available at the time of publication. The company reserves the right to make updates and modifications. The following are prohibited: reprinting, reproduction, forwarding to unauthorized people and/or third parties, and translation, including partial, without written authorization from Automobili Lamborghini S.p.A.

M) Assembling the wiper system control unit

1. Use the 2 screws (**B-Fig.11a**) to secure the control unit (**A-Fig.11a**) to the bracket.
2. Connect the connectors (**C-Fig.11a**).

- Position the footboard passenger side.

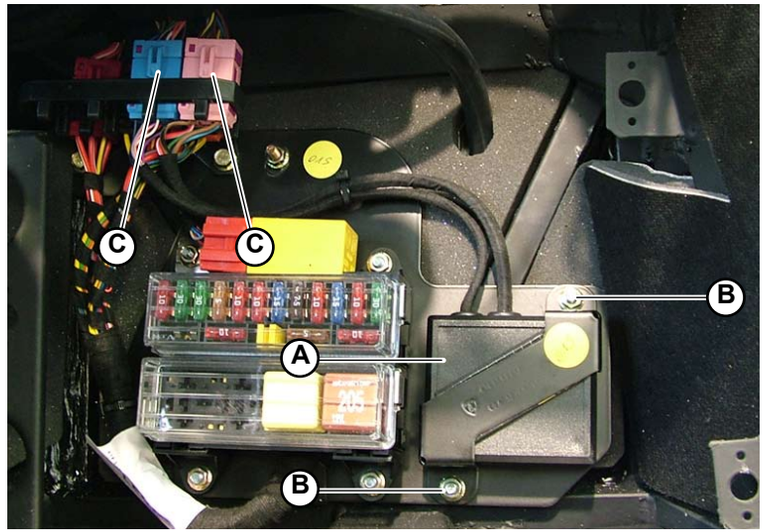

Fig.11a

® Automobili Lamborghini S.p.A.
The information and procedures published below are strictly confidential and exclusively for the Lamborghini Dealer Network and Authorized Service Points. All copyrights are property of Automobili Lamborghini S.p.A based on copyright law. All of the PDF chapters in the WEB workshop manuals described below are based on information available at the time of publication. The company reserves the right to make updates and modifications. The following are prohibited: reprinting, reproduction, forwarding to unauthorized people and/or third parties, and translation, including partial, without written authorization from Automobili Lamborghini S.p.A.

N) Assembling the central ornament control unit

Assembling control unit no. 1

Control unit no. 1 controls:
- **Lifting system (A-Fig. 12)**
- **TCS (B-Fig. 12)**
- **Open/close VACS (C-Fig. 12)**

1. Secure control unit no. 1 (**D-Fig.13**) to the central ornament (**E-Fig.13**) using the 4 screws (**F-Fig.13**).
2. Connect the connector (**G-Fig.13**).

- Assemble the tunnel ornament **(086305)**.

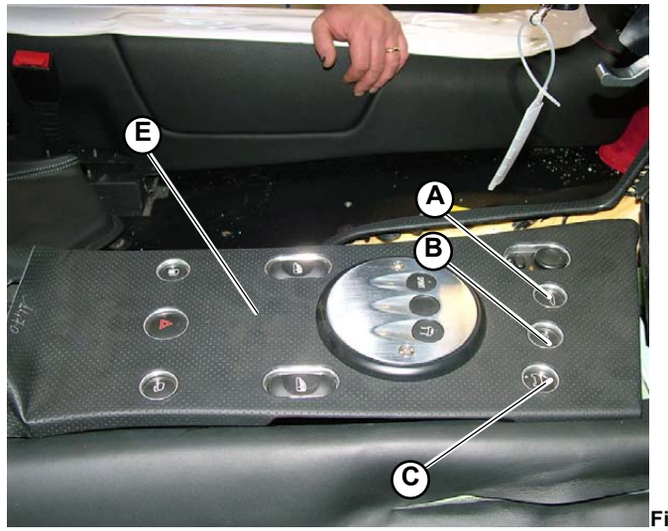

Fig.12

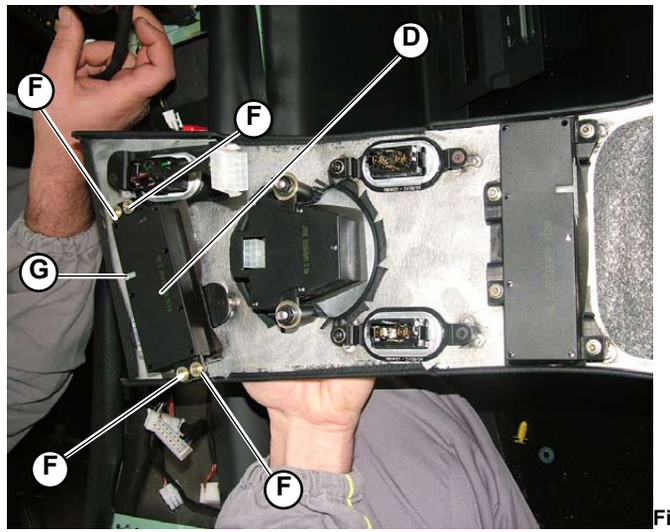

Fig.13

® Automobili Lamborghini S.p.A.
The information and procedures published below are strictly confidential and exclusively for the Lamborghini Dealer Network and Authorized Service Points. All copyrights are property of Automobili Lamborghini S.p.A based on copyright law. All of the PDF chapters in the WEB workshop manuals described below are based on information available at the time of publication. The company reserves the right to make updates and modifications. The following are prohibited: reprinting, reproduction, forwarding to unauthorized people and/or third parties, and translation, including partial, without written authorization from Automobili Lamborghini S.p.A.

Assembling control unit no. 2

Control unit no. 2 controls:
- **Open/close petrol flap (A-Fig. 14)**
- **Hazard lights (B-Fig. 14)**
- **Open/close mirror (C-Fig. 14)**

1. Secure control unit no. 2 (**D-Fig.15**) to the central ornament (**E-Fig.15**) using the 4 screws (**F-Fig.15**).
2. Connect the connector (**G-Fig.15**).

- Assemble the tunnel ornament **(086305)**.

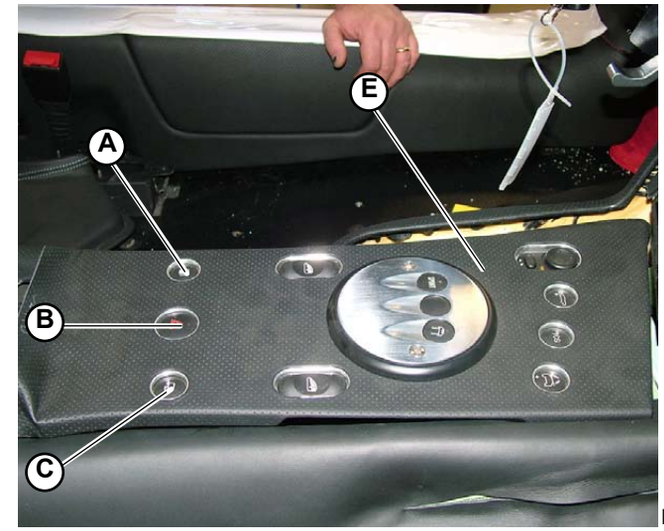

Fig.14

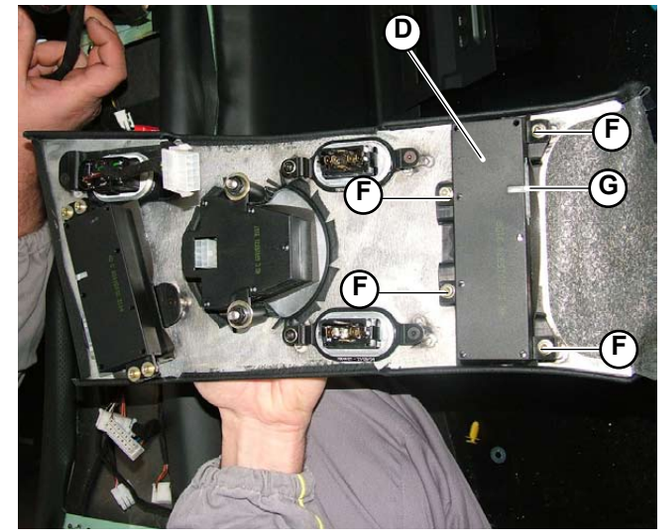

Fig.15

® Automobili Lamborghini S.p.A.
The information and procedures published below are strictly confidential and exclusively for the Lamborghini Dealer Network and Authorized Service Points. All copyrights are property of Automobili Lamborghini S.p.A based on copyright law. All of the PDF chapters in the WEB workshop manuals described below are based on information available at the time of publication. The company reserves the right to make updates and modifications. The following are prohibited: reprinting, reproduction, forwarding to unauthorized people and/or third parties, and translation, including partial, without written authorization from Automobili Lamborghini S.p.A.

O) Assembling the ETB control units

1. Secure the 2 ETB control unit to the bracket using the 4 nuts (**A-Fig.16**) (2 per side).
2. Secure the bracket using the 2 screws (**B-Fig.16**).
3. Connect the connectors (**C-Fig.16**).

- Assemble the air filter unit **(013305)**.
- Assemble the engine compartment left side panel **(081305)**.

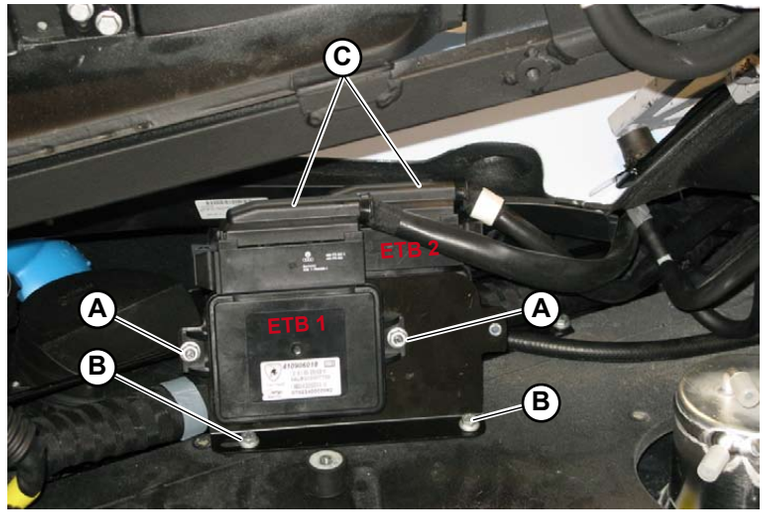

Fig.16

® Automobili Lamborghini S.p.A.
The information and procedures published below are strictly confidential and exclusively for the Lamborghini Dealer Network and Authorized Service Points. All copyrights are property of Automobili Lamborghini S.p.A based on copyright law. All of the PDF chapters in the WEB workshop manuals described below are based on information available at the time of publication. The company reserves the right to make updates and modifications. The following are prohibited: reprinting, reproduction, forwarding to unauthorized people and/or third parties, and translation, including partial, without written authorization from Automobili Lamborghini S.p.A.

TPMS
(Tire pressure check)

TPMS components layout (Fig.1)	
A.	TPMS Control unit
B.	Front antenna
C.	Rear antenna
D.	Trigger

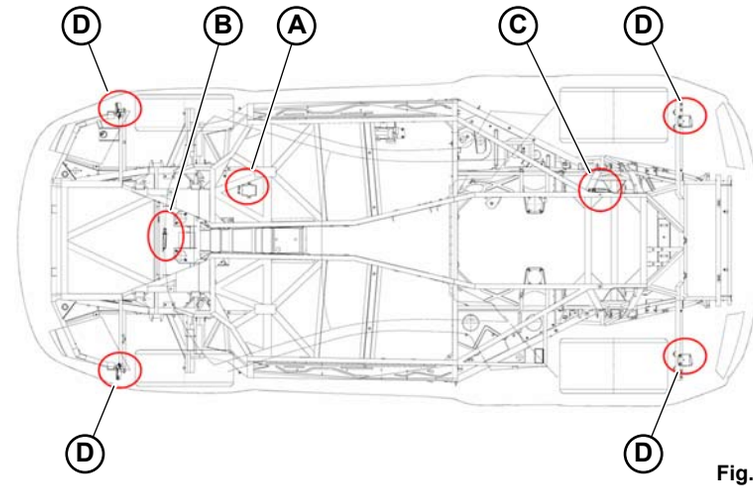

Fig.1

The TPMS ECU (**A-Fig.1/2**) monitors the tire pressure of the four wheels during driving.
The driver is notified if a substantial drop in pressure occurs by means of symbols and messages appearing on the instrument panel's display. The system operates by means of sensors (**s-Fig.3**) located on the wheels. Communication between these sensors and the tire pressure control system takes place without the use of cables (trigger **D-Fig.1**).
The tire pressure also depends on the tire temperature: the tire pressure increases 0.1 every 10°C the temperature rises. The tires heat up during driving, causing the tire pressure to rise. Adjust the tire pressure only when the tires are cold; that is, at ambient temperature. The recommended tire pressures are stated in the user and maintenance booklets and on the sticker on the door pillar.

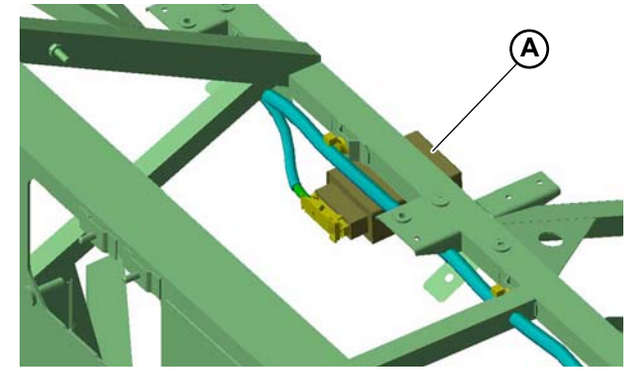

Fig.2

Fig.3

Important!
- **Do not modify the tire pressure when the tires are overheated: this could damage them or even cause them to explode. Change the pressure only when the tires are at ambient temperature.**
- **When replacing a tire, do not loosen or exchange the sensors or valves. Only the seal should be replaced and, if necessary, the valve itself and the wheel's electronic component.**
- **Remember that the Tire-Mobility-System (emergency repair kit) could distort the tire pressure control system's readings or compromise its operation. The pressure control system's sensor must therefore be replaced.**
- **The sensor batteries last approximately 7 years, after which they must be replaced.**

For respect of the environment
Insufficient tire pressure increases fuel consumption and tire wear.

® Automobili Lamborghini S.p.A.
The information and procedures published below are strictly confidential and exclusively for the Lamborghini Dealer Network and Authorized Service Points. All copyrights are property of Automobili Lamborghini S.p.A based on copyright law. All of the PDF chapters in the WEB workshop manuals described below are based on information available at the time of publication. The company reserves the right to make updates and modifications. The following are prohibited: reprinting, reproduction, forwarding to unauthorized people and/or third parties, and translation, including partial, without written authorization from Automobili Lamborghini S.p.A.

Checking the engine idle speed and Combustion values

CAUTION

When checking the engine idle speed and combustion values, pay the utmost attention because the exhaust system components can become extremely hot.

STOP

- **Carry out the following procedures every time a component of the engine control system is disconnected or replaced and every time the engine idle speed is instable or too high (the normal value is approx. 950 rpm).**
- **The engine must be switched off for at least 10 hours beforehand and the tests must be carried out at an environment temperature between 10 and 35°C.**
- **Check using the LDAS32 diagnostic interface.**

1. Connect the LDAS32 diagnostic interface to the car.

2. While the engine is switched off check the following values:
PA: accelerator pedal in the idle position. Must equal 150 +- 15 bit. An incorrect adjustment generates error codes.
PA: accelerator pedal in the maximum position. Must equal 700 +- 15 bit. An incorrect adjustment generates error codes.

3. If the idle speed is not set correctly, act on the accelerator pedal lever.

4. If the maximum is not set correctly, act on the accelerator pedal stroke.

5. Check all the engine parameters using the LDAS32 display. In the indicated conditions all the LEDs will be green: in particular environment temperature conditions (<10°C or >35°C) some LEDs may be red; this is normal if the values of the relative parameters are congruent with such temperatures.

® Automobili Lamborghini S.p.A.
The information and procedures published below are strictly confidential and exclusively for the Lamborghini Dealer Network and Authorized Service Points. All copyrights are property of Automobili Lamborghini S.p.A based on copyright law. All of the PDF chapters in the WEB workshop manuals described below are based on information available at the time of publication. The company reserves the right to make updates and modifications. The following are prohibited: reprinting, reproduction, forwarding to unauthorized people and/or third parties, and translation, including partial, without written authorization from Automobili Lamborghini S.p.A.

To adapt the self-adjusting parameters, idle status must equal 4.

Adjustment of idle status is automatic and managed completely by the LIE; when the engine has reached idle speed (tH2o >85° and T oil >90°) throttle self learning can take place (the Idle Self Learning Timer decreases from 3 to 0 and the sl time counter increases from 0 to 60 seconds, setting the correct air percentage).

The IdleOffSet SL value remains constant and is used by the system for the basic throttle opening setting in idle status until it is possible to complete a new SLTimer self-learning. This occurs just once during a trip and only in the conditions mentioned above.

® Automobili Lamborghini S.p.A.
The information and procedures published below are strictly confidential and exclusively for the Lamborghini Dealer Network and Authorized Service Points. All copyrights are property of Automobili Lamborghini S.p.A based on copyright law. All of the PDF chapters in the WEB workshop manuals described below are based on information available at the time of publication. The company reserves the right to make updates and modifications. The following are prohibited: reprinting, reproduction, forwarding to unauthorized people and/or third parties, and translation, including partial, without written authorization from Automobili Lamborghini S.p.A.

OBD II CODING

Component/System	Fault code	Monitor Strategy description	Malfunction Criteria	Threshold Parameters	Secondary Parameters	Enable Conditions	Time Required	Mil Illumination
CATALYST MONITORING								
CATALYST SYSTEM EFF. Bank 1 **60**	**P0420**	Functional check	Front/rear oxygen sensor ratio	< 6	Time from cranking function of TH2O at cranking Catalyst temperature CL fuel control RPM MAP DMAPn and DMAPp (mmHg/rev) No active DTCs: DTP (°TP/msec)	 > 300°C On >900 and < 2500 > 40 kPa and < 80 kPa < 0.03 P0133 < 0.08	5 faults in 10 times Once per trip	Two trips
CATALYST SYSTEM EFF. Bank 2	**P0430**	Functional check	Front/rear oxygen sensor ratio	< 6	Same as P0420 No active DTCs:	Same as P0420 P0153	Same as P0420	Two trips
MISFIRE MONITORING								
RANDOM MISFIRE	**P0300**	Misfire detection with exhaust pressure sensor	Misfire Index (MI) AND Harmonics Amplitude (HA) of Exhaust pressure signal	MI>Threshold AND HA Off Range function of RPM and MAP MI > 2nd Threshold	RPM MAP	>800 >33 kPa	1000 rev 200 rev Continuous	Two trips Immediately (blink)
RANDOM MISFIRE Bank1	**P1305**	Misfire detection with exhaust pressure sensor	Same as P0300	Same as P0300	Same as P0300	Same as P0300	Same as P0300	Two trips / immediately
RANDOM MISFIRE Bank2	**P1306**	Misfire detection with exhaust pressure sensor	Same as P0300	Same as P0300	Same as P0300	Same as P0300	Same as P0300	Two trips / immediately (blink)
CYLINDER 1 MISFIRE DETECTED	**P0301**	Misfire detection with exhaust pressure sensor	Misfire Index (MI), Harmonics Amplitude (HA) AND Phase of Exhaust pressure signal	MI>Threshold AND HA Off Range function of RPM and MAP MI > 2nd Threshold	RPM MAP	>800 >33 kPa	1000 rev 200 rev Continuous	Two trips Immediately (blink)
CYLINDER 2 MISFIRE DETECTED	**P0302**	Misfire detection with exhaust pressure sensor	Same as P0301	Same as P0301	Same as P0301	Same as P0301	Same as P0301	Two trips / immediately (blink)
CYLINDER 3 MISFIRE DETECTED	**P0303**	Misfire detection with exhaust pressure sensor	Same as P0301	Same as P0301	Same as P0301	Same as P0301	Same as P0301	Two trips / immediately (blink)
CYLINDER 4 MISFIRE DETECTED	**P0304**	Misfire detection with exhaust pressure sensor	Same as P0301	Same as P0301	Same as P0301	Same as P0301	Same as P0301	Two trips / immediately (blink)

® Automobili Lamborghini S.p.A.
The information and procedures published below are strictly confidential and exclusively for the Lamborghini Dealer Network and Authorized Service Points. All copyrights are property of Automobili Lamborghini S.p.A based on copyright law. All of the PDF chapters in the WEB workshop manuals described below are based on information available at the time of publication. The company reserves the right to make updates and modifications. The following are prohibited: reprinting, reproduction, forwarding to unauthorized people and/or third parties, and translation, including partial, without written authorization from Automobili Lamborghini S.p.A.

CYLINDER 5 MISFIRE DETECTED	**P0305**	Misfire detection with exhaust pressure sensor	Same as P0301	Same as P0301	Same as P0301	Same as P0301	Same as P0301	Two trips / immediately (blink)
CYLINDER 6 MISFIRE DETECTED	**P0306**	Misfire detection with exhaust pressure sensor	Same as P0301	Same as P0301	Same as P0301	Same as P0301	Same as P0301	Two trips / immediately (blink)
CYLINDER 7 MISFIRE DETECTED	**P0307**	Misfire detection with exhaust pressure sensor	Same as P0301	Same as P0301	Same as P0301	Same as P0301	Same as P0301	Two trips / immediately (blink)
CYLINDER 8 MISFIRE DETECTED	**P0308**	Misfire detection with exhaust pressure sensor	Same as P0301	Same as P0301	Same as P0301	Same as P0301	Same as P0301	Two trips / immediately (blink)
CYLINDER 9 MISFIRE DETECTED	**P0309**	Misfire detection with exhaust pressure sensor	Same as P0301	Same as P0301	Same as P0301	Same as P0301	Same as P0301	Two trips / immediately (blink)
CYLINDER 10 MISFIRE DETECTED	**P0310**	Misfire detection with exhaust pressure sensor	Same as P0301	Same as P0301	Same as P0301	Same as P0301	Same as P0301	Two trips / immediately (blink)
CYLINDER 11 MISFIRE DETECTED	**P0311**	Misfire detection with exhaust pressure sensor	Same as P0301	Same as P0301	Same as P0301	Same as P0301	Same as P0301	Two trips / immediately (blink)
CYLINDER 12 MISFIRE DETECTED	**P0312**	Misfire detection with exhaust pressure sensor	Same as P0301	Same as P0301	Same as P0301	Same as P0301	Same as P0301	Two trips / immediately (blink)
EXHAUST PRESSURE SENSOR Bank 1	**P1311**	Functional Check	Amplitude of characteristic engine cycle's frequency (Nr. 6°) and misfire indicator	< 8 bit and >Misfire index	Time from cranking RPM MAP	>10 sec > 1000 > 33 kPa	10 sec Continuous	Two trips
	P1312	Low input	Exhaust sensor pressure signal	**< 0.5 V (-0.8 kPa)**	Same as P1311	Same as P1311	Same as P1311	Two trips
	P1313	High input / Open circuit	Exhaust sensor pressure signal	**> 4.9 V (33.7 kPa)**	Same as P1311	Same as P1311	Same as P1311	Two trips
EXHAUST PRESSURE SENSOR Bank 2	**P1314**	Functional check	Amplitude of characteristic engine cycle's frequency (Nr. 6°) and misfire indicator	< 8 bit and > Misfire index	Same as P1311	Same as P1311	Same as P1311	Two trips
	P1315	Low input	Exhaust sensor pressure signal	**< 0.5 V (-0.8 kPa)**	Same as P1311	Same as P1311	Same as P1311	Two trips
	P1316	High input / Open circuit	Exhaust sensor pressure signal	**> 4.9 V (33.7 kPa)**	Same as P1311	Same as P1311	Same as P1311	Two trips
EVAPORATIVE SYSTEM MONITORING								
EVAPORATIVE EMISSION CONTROL SYSTEM	**P0441**	Insufficient Purge Flow	Evaporative System Pressure	< - 500 Pa	RPM TH2O at cranking MAP Vent control valve Purge flow No active DTCs:	< 1500 < 95° C < 66.7 kPa Open > 400 mg/sec P0450 **P0444; P0445**	< 3 sec Once per trip	Two trips

® Automobili Lamborghini S.p.A.
The information and procedures published below are strictly confidential and exclusively for the Lamborghini Dealer Network and Authorized Service Points. All copyrights are property of Automobili Lamborghini S.p.A based on copyright law. All of the PDF chapters in the WEB workshop manuals described below are based on information available at the time of publication. The company reserves the right to make updates and modifications. The following are prohibited: reprinting, reproduction, forwarding to unauthorized people and/or third parties, and translation, including partial, without written authorization from Automobili Lamborghini S.p.A.

P0442	Leak detected	Evaporative System Pressure	< -1000 Pa	RPM TH2O at cranking MAP Vent control valve No active DTCs:	< 1500 < 95° C < 66.7 kPa Closed P0441 **P0444; P0445** **P0447; P0448** P0450	< 35 sec	Two trips
P0444	Evaporative Emission System Purge Control Valve Circuit Open/Low input	Feedback-test	incorrect data feed-back			Continuous	Two trips
P0445	Evaporative Emission System Purge Control Valve Circuit Shorted	Feedback-test	incorrect data feed-back			Continuous	Two trips
P1440	Fault code set in case of Bank 1 purge malfun-ction	set in case of P0444 or P0445				Continuous	Two trips
P1441	Fault code set in case of Bank 2 purge malfun-ction	set in case of P0444 or P0445				Continuous	Two trips
P0447	Evaporative Emission System Vent Control Circuit Open/Low input	Feedback-test	incorrect data feed-back			Continuous	Two trips
P0448	Evaporative Emission System Vent Control Circuit Shorted	Feedback-test	incorrect data feed-back			Continuous	Two trips
P0450	Pressure Sensor Mal-function	Evaporative System Pressure	< -100 Pa or > 100 Pa			At Key-on	Two trips
			<-1500 Pa or >-500 Pa	MAP RPM	< 66.7 kPa < 1500	Once per trip	
P0452	Evaporative Emission System Pressure Sen-sor/Switch Low open circuit	tank pressure sensor signal	<0.5 V (-5.97 kPa)			Continuous	Two trips
P0453	Evaporative Emission System Pressure Sen-sor/Switch High	tank pressure sensor signal	>4.9 V (10.19 kPa)			Continuous	Two trips

® Automobili Lamborghini S.p.A.
The information and procedures published below are strictly confidential and exclusively for the Lamborghini Dealer Network and Authorized Service Points. All copyrights are property of Automobili Lamborghini S.p.A based on copyright law. All of the PDF chapters in the WEB workshop manuals described below are based on information available at the time of publication. The company reserves the right to make updates and modifications. The following are prohibited: reprinting, reproduction, forwarding to unauthorized people and/or third parties, and translation, including partial, without written authorization from Automobili Lamborghini S.p.A.

SECONDARY AIR SYSTEM MONITORING								
SECONDARY AIR INJECTION Bank1	**P0491**	Functional check during normal operation of secondary air injection	Rear O2 lambda sensor output	> 0.4 V	Air pump Electro valve RPM Rear O2 sensor Nominal Airflow through the engine	Energized Activated > 800 Active (fully warmed up) < 5 g/sec	8 sec Once per trip	Two trips
		Functional check	Front O2 lambda sensor Ip Current integral value	< 15 mA	Air pump Electro valve TH2O at Cranking TH2O Pedal position RPM No active DTCs:	Energized Activated > -7°C > 70°C < 2° < 1200 P0133	30 sec Once per trip	
SECONDARY AIR INJECTION Bank2	**P0492**	Functional check during normal operation of secondary air injection	Rear O2 lambda sensor output	> 0.4 V	Same as P0491	Same as P0491	Same as P0491	Two trips
		Functional check	Front O2 lambda sensor Ip Current integral value	< 15 mA				
SECONDARY AIR INJECTION ELECTRO VALVE	**P0413**	Secondary Air Injection System Switching Valve Circuit Open/Low input	Feedback-test	incorrect data feedback			Immediately once per trip	Two trips
	P0414	Secondary Air Injection System Switching Valve Circuit Shorted	Feedback-test	incorrect data feedback			Immediately once per trip	Two trips
SECONDARY AIR INJECTION SYSTEM SWITCHING VALVE STUCK OPEN (BANK 1)	**P2440**	Functional check	Bank 1 rear O2 lambda sensor output when pump on and electrovalve off	< 0.4V	Secondary air electro valve	Off	4 sec	Two trips
					Secondary air pump	On	Once per trip	
SECONDARY AIR INJECTION SYSTEM SWITCHING VALVE STUCK OPEN (BANK 2)	**P2442**	Functional check	Bank 2 rear O2 lambda sensor output when pump on and electrovalve off	< 0.4V	Same as P2440	Same as P2440	same as P2440 Once per trip	Two trips
FUEL SYSTEM MONITORING								
FUEL SYSTEM Bank 1	**P0171**	Fuel trim system too lean	Long term fuel trim correction	> 1.25	TH2O Carbon canister load estimation Lambda control	> 70°C < 0.065 grams of gasoline for grams of gas flow from purge system Closed loop	30 sec Continuous	Two trips

® Automobili Lamborghini S.p.A.
The information and procedures published below are strictly confidential and exclusively for the Lamborghini Dealer Network and Authorized Service Points. All copyrights are property of Automobili Lamborghini S.p.A based on copyright law. All of the PDF chapters in the WEB workshop manuals described below are based on information available at the time of publication. The company reserves the right to make updates and modifications. The following are prohibited: reprinting, reproduction, forwarding to unauthorized people and/or third parties, and translation, including partial, without written authorization from Automobili Lamborghini S.p.A.

	P0172	Fuel trim system too rich	Long term fuel trim correction	< 0.75	Same as P0171	Same as P0171	Same as P0171	Two trips
	P2096	Out of range lean	Feedback of 2nd lambda control loop value limit low	< -0.015	Lambda control 2nd lambda control RPM MAP	Closed loop Closed loop > 1400 and < 4000 > 30.7 kPa and < 53.3 kPa	30 sec Continuous	Two trips
	P2097	Out of range rich	Feedback of 2nd lambda control loop value limit high	> 0.015	Same as P2096	Same as P2096	Same as P2096	Two trips
FUEL SYSTEM Bank 2	**P0174**	Fuel trim system too lean	Long term fuel trim correction	> 1.25	Same as P0171	Same as P0171	Same as P0171	Two trips
	P0175	Fuel trim system too rich	Long term fuel trim correction	< 0.75	Same as P0171	Same as P0171	Same as P0171	Two trips
	P2098	Out of range lean	Feedback of 2nd lambda control loop value limit low	< -0.015	Same as P2096	Same as P2096	Same as P2096	Two trips
	P2099	Out of range rich	Feedback of 2nd lambda control loop value limit high	> 0.015	Same as P2096	Same as P2096	Same as P2096	Two trips
OXYGEN SENSOR MONITORING								
OXYGEN SENSOR FRONT Bank 1	**P0133**	Response Rate	Switching frequency AND Quick output change counter	S_FREQ < 10 or QOCC < 50	Secondary air Time form cranking RPM MAP |DRPM| |DMAP| Lambda target TH2O Closed loop fuel control TH2O at cranking Time lag No active DTCs:	OFF > 30 sec > 900 and < 2200 > 33 kPa and < 60 kPa < 50 1/min / 10msec < 4 (Pa/rev) > 0.98 and < 1.05 > 45 °C On > -10°C and < 50°C 2 sec P0131 P0132	5 sec Once per trip	Two trips
	P0134	Oxygen sensor inactive	Open loop status	different to 0	Warmed up sensor No active DTCs:	 P0131 P0132	60 sec Continuous	Two trips
	P2195	Oxygen sensor signal stuck lean	Oxygen sensor output	LL_status= -1	Same as P0134 Closed loop Secondary air	 On OFF	10 sec Continuous	Two trips

® Automobili Lamborghini S.p.A.
The information and procedures published below are strictly confidential and exclusively for the Lamborghini Dealer Network and Authorized Service Points. All copyrights are property of Automobili Lamborghini S.p.A based on copyright law. All of the PDF chapters in the WEB workshop manuals described below are based on information available at the time of publication. The company reserves the right to make updates and modifications. The following are prohibited: reprinting, reproduction, forwarding to unauthorized people and/or third parties, and translation, including partial, without written authorization from Automobili Lamborghini S.p.A.

	P2196	Oxygen sensor signal stuck rich	Oxygen sensor output	LL_status= 1	Same as P0134 Closed loop	 On	10 sec Continuous	Two trips
	P0131	Low Voltage/ Positive Current Control Circuit Open	Oxygen sensor output voltage	< 1 V	Warmed up sensor Closed loop	 On	Immediately Continuous	Two trips
	P0132	High Voltage / Refe-rence/Negative Voltage Control Circuit Open	Oxygen sensor output voltage	> 6 V	Same as P0131	Same as P0131	Same as P0131	Two trips
OXYGEN SENSOR REAR Bank 1	**P0140**	Oxygen sensor inactive / Open circuit	Oxygen sensor output voltage	0.4 < V < 0.55	No active DTCs:	P0141	60 sec Continuous	Two trips
		Transient test	Oxygen sensor output voltage - Time for Rear O2 sensor signal to go below 0.15V	< 2 sec	ILIOS_lambda Fuel Cut Off	> 1.0 On	5 times Continuous	
			Oxygen sensor output voltage - Time for transition from 0.55V to 0.25V	>700 msec	ILIOS_lambda Fuel Cut Off	> 1.0 On	5 times Continuous	
	P2270	Oxygen sensor signal stuck lean	Oxygen sensor output voltage	0.01 < V < 0.1	Same as P0134 No active DTCs: Closed loop Secondary air	 P0137 P0138 On OFF	300 sec Continuous	Two trips
	P2271	Oxygen sensor signal stuck rich	Oxygen sensor output voltage	0.7 < V < 1.05	Same as P0134 No active DTCs: Closed loop	 P0137 P0138 On	300 sec Continuous	Two trips
	P0137	Low Voltage	Oxygen sensor output voltage	< 0.01 V	Same as P0131		15 sec Continuous	Two trips
	P0138	High Voltage	Oxygen sensor output voltage	> 1.05 V	Same as P0131		15 sec Continuous	Two trips
OXYGEN HEATER FRONT Bank 1	**P0135**	Functional check	Oxygen sensor tem-perature	<600 °C or >900 °C	Catalyst temperature	> 70° C (dew point)	15 sec Continuous	Two trips
	P0031	Control Circuit Low	Feedback-test	No coherence data	Key	On	Immediately Continuous	Two trips
	P0032	Control Circuit High	Feedback-test	No coherence data	Key	On	Immediately Continuous	Two trips
OXYGEN HEATER REAR Bank 1	**P0141**	Functional check	Oxygen sensor output voltage	0.4 < V < 0.55	Time from engine ON	20 sec	10 sec Once per trip	Two trips

® Automobili Lamborghini S.p.A.
The information and procedures published below are strictly confidential and exclusively for the Lamborghini Dealer Network and Authorized Service Points. All copyrights are property of Automobili Lamborghini S.p.A based on copyright law. All of the PDF chapters in the WEB workshop manuals described below are based on information available at the time of publication. The company reserves the right to make updates and modifications. The following are prohibited: reprinting, reproduction, forwarding to unauthorized people and/or third parties, and translation, including partial, without written authorization from Automobili Lamborghini S.p.A.

OXYGEN SENSOR FRONT Bank 2	**P0153**	Response Rate	Switching frequency AND Quick output change counter	Same as P0133	Same as P0133 No active DTCs:	Same as P0133 P0151 P0152	Same as P0133	Two trips
	P0154	Oxygen sensor inactive	Open loop status	Different to 0	Same as P0134 No active DTCs:	 P0151 P0152	Same as P0134	Two trips
	P2197	Oxygen sensor signal stuck lean	Oxygen sensor output	LL_status= -1	Same as P2195	Same as P2195	Same as P2195	Two trips
	P2198	Oxygen sensor signal stuck rich	Oxygen sensor output	LL_status= 1	Same as P2196	Same as P2196	Same as P2196	Two trips
	P0151	Low Voltage/ Positive Current Control Circuit Open	Oxygen sensor output voltage	< 1 V	Same as P0131	Same as P0131	Same as P0131	Two trips
	P0152	High Voltage / Refe-rence/Negative Voltage Control Circuit Open	Oxygen sensor output voltage	> 6 V	Same as P0131	Same as P0131	Same as P0131	Two trips
OXYGEN SENSOR REAR Bank 2	**P0160**	Oxygen sensor inactive / Open circuit	Oxygen sensor output voltage	0.4 < V < 0.55	Same as P0140 No active DTCs:	Same as P0140 P0161	Same as P0140	Two trips
		Transient test	Oxygen sensor output voltage - Time for Rear O2sensor signal to go below 0.15V	< 2 sec				
			Oxygen sensor output voltage - Time for transition from 0.55V to 0.25V	> 700 msec				
	P2272	Oxygen sensor signal stuck lean	Oxygen sensor output voltage	0.01 < V < 0.1	Same as P2270 No active DTCs:	Same as P2270 P0157 P0158	Same as P2270	Two trips
	P2273	Oxygen sensor signal stuck rich	Oxygen sensor output voltage	0.7 < V < 1.05	Same as P2271 No active DTCs:	Same as P2271 P0157 P0158	Same as P2271	Two trips
	P0157	Low Voltage	Oxygen sensor output voltage	< 0.01 V	Same as P0131	Same as P0131	Same as P0131	Two trips
	P0158	High Voltage	Oxygen sensor output voltage	> 1.05 V	Same as P0131	Same as P0131	Same as P0131	Two trips
OXYGEN HEATER FRONT Bank 2	**P0155**	Functional check	Oxygen sensor tem-perature	<600 °C or >900 °C	Catalyst temperature	> 70° C (dew point)	15 sec Continuous	Two trips
	P0051	Control Circuit Low	Feedback-test	No coherence data	Key	On	Immediately Continuous	Two trips

® Automobili Lamborghini S.p.A.
The information and procedures published below are strictly confidential and exclusively for the Lamborghini Dealer Network and Authorized Service Points. All copyrights are property of Automobili Lamborghini S.p.A based on copyright law. All of the PDF chapters in the WEB workshop manuals described below are based on information available at the time of publication. The company reserves the right to make updates and modifications. The following are prohibited: reprinting, reproduction, forwarding to unauthorized people and/or third parties, and translation, including partial, without written authorization from Automobili Lamborghini S.p.A.

	P0052	Control Circuit High	Feedback-test	No coherence data	Key	On	Immediately Continuous	Two trips
OXYGEN HEATER REAR Bank 2	**P0161**	Functional check	Oxygen sensor output voltage	0.4 < V < 0.55	Same as P0141	Same as P0141	Same as P0141	Two trips
POSITIVE CRANK VENTILATION								
POSITIVE CRANKCASE VALVE SYSTEM	**P1400**	Micro switches	Check position switches	Open status			5 sec Continuous	Two trips
ENGINE COOLING SYSTEM MONITORING								
ENGINE COOLANT TEMPERATURE	**P0116**	Functional check	Comparison between bank1 sensor and bank2 sensor	> 15 °C			5 sec Continuous	Two trips
	P0117	Low Input	Coolant temperature sensor	< 0.048V (132.5 °C)			0.5 sec Continuous	Two trips
	P0118	High input / Open circuit	Coolant temperature sensor	> 4.8V (-46.1 °C)			0.5 sec Continuous	Two trips
	P1116	Fault code set in case of Bank 1 sensor malfun-ction					Continuous	Two trips
	P1117	Fault code set in case of Bank 2 sensor malfun-ction					Continuous	Two trips
THERMOSTAT	**P0128**	Functional check	Comparison among Estimated Engine Coolant Temperature (EECT) and Engine Coolant Temperature	When EECT = 75°C, ECT < 70°C	TH2O at Cranking (TH2OAvv) Time from engine on	-7°C < TH2OAvv < 50°C > 5 sec	Immediately Once per trip	Two trips
VARIABLE VALVE TIMING AND/OR CONTROL (VVT) SYSTEM MONITORING								
INTAKE CAMSHAFT POSITION SENSOR Bank 1	**P0341**	Response	Cam sensor signal	Repetition of the same sector of the cam signal after one revo-lution of the crankshaft			20 times Continuous	Two trips
EXHAUST CAMSHAFT POSI-TION SENSOR Bank 1	**P0366**	Response	Cam sensor signal	Same as P0341			20 times Continuous	Two trips
INTAKE CAMSHAFT POSITION SENSOR Bank 2	**P0346**	Response	Cam sensor signal	Same as P0341			20 times Continuous	Two trips

® Automobili Lamborghini S.p.A.
The information and procedures published below are strictly confidential and exclusively for the Lamborghini Dealer Network and Authorized Service Points. All copyrights are property of Automobili Lamborghini S.p.A based on copyright law. All of the PDF chapters in the WEB workshop manuals described below are based on information available at the time of publication. The company reserves the right to make updates and modifications. The following are prohibited: reprinting, reproduction, forwarding to unauthorized people and/or third parties, and translation, including partial, without written authorization from Automobili Lamborghini S.p.A.

EXHAUST CAMSHAFT POSITION SENSOR Bank 2	**P0391**	Response	Cam sensor signal	Same as P0341			20 times Continuous	Two trips
CRANKSHAFT POSITION SENSOR	**P0336**	Response	Crank sensor signal	If the counter of the teeth of the flywheel is less than a number of 16 after two consecutive falling edges of the cam signal			30 times Continuous	Two trips
SIGNAL SEQUENCE	**P1310**	Response	Intermittent loss of signal (blip)	If a pattern of flywheel teeth (one hole – two teeth – one hole – 6 teeth) can't be recognized (it means more than two flywheel holes for every 90° camshaft, or more than 16 teeth every 90° camshaft, or only low camshaft signal after the mentioned pattern.			20 time Continuous	Two trips
Intake VVT control solenoid valve circuit low bank 1	**P0076**	Low Voltage	Feedback-test	No coherence data	Key	On	10 times Continuous	Two trips
Intake VVT control solenoid valve circuit high bank 1	**P0077**	High Voltage	Feedback-test	No coherence data	Key	On	10 times Continuous	Two trips
Exhaust VVT control solenoid valve circuit low bank 1	**P0079**	Low Voltage	Feedback-test	No coherence data	Key	On	10 times Continuous	Two trips
Exhaust VVT control solenoid valve circuit high bank 1	**P0080**	High Voltage	Feedback-test	No coherence data	Key	On	10 times Continuous	Two trips
Intake VVT control solenoid valve circuit low bank 2	**P0082**	Low Voltage	Feedback-test	No coherence data	Key	On	10 times Continuous	Two trips
Intake VVT control solenoid valve circuit high bank 2	**P0083**	High Voltage	Feedback-test	No coherence data	Key	On	10 times Continuous	Two trips
Exhaust VVT control solenoid valve circuit low bank 2	**P0085**	Low Voltage	Feedback-test	No coherence data	Key	On	10 times Continuous	Two trips

® Automobili Lamborghini S.p.A.
The information and procedures published below are strictly confidential and exclusively for the Lamborghini Dealer Network and Authorized Service Points. All copyrights are property of Automobili Lamborghini S.p.A based on copyright law. All of the PDF chapters in the WEB workshop manuals described below are based on information available at the time of publication. The company reserves the right to make updates and modifications. The following are prohibited: reprinting, reproduction, forwarding to unauthorized people and/or third parties, and translation, including partial, without written authorization from Automobili Lamborghini S.p.A.

Exhaust VVT control solenoid valve circuit high bank 2	**P0086**	High Voltage	Feedback-test	No coherence data	Key	On	10 times Continuous	Two trips
Crankshaft Position – Camshaft Position Correlation Sensor A Bank 1	**P0016**	Response	Cam sensor signal	If a difference of 10 crankshaft degrees is detected among the reference position and the measured one	During cranking, with Oil Control Valves OFF		1 time Once per trip	Two trips
Crankshaft Position – Camshaft Position Correlation Sensor B Bank 1	**P0017**	Response	Cam sensor signal	Same as P0016	Same as P0016		Same as P0016	Two trips
Crankshaft Position – Camshaft Position Correlation Sensor A Bank 2	**P0018**	Response	Cam sensor signal	Same as P0016	Same as P0016		Same as P0016	Two trips
Crankshaft Position – Camshaft Position Correlation Sensor B Bank 2	**P0019**	Response	Cam sensor signal	Same as P0016	Same as P0016		Same as P0016	Two trips
Intake Variable Valve Timing Control Range/Performance Bank 1	**P1366**	Functional check	Difference between VVT position Target and VVT position	> 10°	Time RPM	> 10 sec > 800	5 time Once per trip	Two trips
Exhaust Variable Valve Timing Control Range/Performance Bank 1	**P1367**	Functional check	Difference between VVT position Target and VVT position	Same as P01366	Same as P01366		Same as P01366	Two trips
Intake Variable Valve Timing Control Range/Performance Bank 2	**P1368**	Functional check	Difference between VVT position Target and VVT position	Same as P01366	Same as P01366		Same as P01366	Two trips
Exhaust Variable Valve Timing Control Range/Performance Bank 2	**P1369**	Functional check	Difference between VVT position Target and VVT position	Same as P01366	Same as P01366		Same as P01366	Two trips
COMPREHENSIVE COMPONENT MONITORING								
MANIFOLD ABSOLUTE PRESSURE / BAROMETRIC PRESSURE	**P0069**	Functional check	Comparison between manifold absolute pressure and barometric pressure	> 6 kPa	Time	> 1.5 sec	10 times At the key on	Two trips

® Automobili Lamborghini S.p.A.
The information and procedures published below are strictly confidential and exclusively for the Lamborghini Dealer Network and Authorized Service Points. All copyrights are property of Automobili Lamborghini S.p.A based on copyright law. All of the PDF chapters in the WEB workshop manuals described below are based on information available at the time of publication. The company reserves the right to make updates and modifications. The following are prohibited: reprinting, reproduction, forwarding to unauthorized people and/or third parties, and translation, including partial, without written authorization from Automobili Lamborghini S.p.A.

	P1106	Functional check	Comparison between ECU bank1 value and ECU bank2 value	> 4 kPa	RPM Time	> 800 > 1 sec	10 times Continuous	Two trips
	P0107	Manifold Absolute Pressure Low Input	Manifold absolute pressure sensor signal	< 0.38 V (20 kPa)			3 times Continuous	Two trips
	P0108	Manifold Absolute Pressure High input / Open circuit	Manifold absolute pressure sensor signal	> 4.28 V (107.9 kPa)			3 times Continuous	Two trips
	P1109	Low input	Barometric pressure sensor signal	< 0.1 V (14 kPa)			1 time Continuous	Two trips
	P1110	High input / Open circuit	Barometric pressure sensor signal	>4.96 V (107.9 kPa)			1 time Continuous	Two trips
	P1113	Fault code set in case of Bank 1 sensor malfunction					Continuous	Two trips
	P1114	Fault code set in case of Bank 2 sensor malfunction						
BATTERY VOLTAGE	**P1101**	Low output	Battery voltage	< 10 V	RPM	> 800	20 times Continuous	Two trips
	P1102	High output	Battery voltage	> 15 V	RPM	> 800	20 times Continuous	Two trips
IDENTIFICATION "LIE" ECU	**P1601**	Range check	Pin detection	No pin 36 detected			10 times At the key on	Two trips
INTAKE AIR TEMPERATURE	**P0111**	Functional check	Comparison between bank1 sensor and bank2 sensor	> 15 °C	Time	> 0.5 sec	3 times Continuous	Two trips
	P0112	Low input	Air temperature sensor	< 0.10 V (130.7 °C)	Time	> 10 sec	10 times Continuous	Two trips
	P0113	High input / Open circuit	Air temperature sensor	> 4.9 V (-46.1 °C)	Time	> 10 sec	10 times Continuous	Two trips
	P1111	Fault code set in case of Bank 1 sensor malfunction					Immediately Continuous	Two trips
	P1112	Fault code set in case of Bank 2 sensor malfunction					Immediately Continuous	Two trips

® Automobili Lamborghini S.p.A.
The information and procedures published below are strictly confidential and exclusively for the Lamborghini Dealer Network and Authorized Service Points. All copyrights are property of Automobili Lamborghini S.p.A based on copyright law. All of the PDF chapters in the WEB workshop manuals described below are based on information available at the time of publication. The company reserves the right to make updates and modifications. The following are prohibited: reprinting, reproduction, forwarding to unauthorized people and/or third parties, and translation, including partial, without written authorization from Automobili Lamborghini S.p.A.

THROTTLE POSITION SENSORS "D"	**P2121**	rationality check	Congruence throttle "D" vs throttle "E"	> 6.2%			0.5 sec Continuous	Two trips
	P2122	Throttle position sensor "D" (updated denomination)	Throttle D position signal	< 0.198 V			Immediately Continuous	Two trips
		Low Input						
	P2123	Throttle position sensor "D" (updated denomination)	Throttle D position signal	> 4.8 V			Immediately Continuous	Two trips
		High Input / Open Circuit						
THROTTLE POSITION SENSORS "E"	**P2127**	Throttle position sensor "E" (new denomination)	Throttle E position signal	< 0.198 V			Immediately Continuous	Two trips
		Low Input						
	P2128	Throttle position sensor "E" (new denomination)	Throttle E position signal	> 4.8 V			Immediately Continuous	Two trips
		High Input / Open Circuit						
THROTTLE ACTUATOR	**P1226**	Fault code set in case of throttle malfunction detected by ECU Bank 1						
	P1227	Fault code set in case of throttle malfunction detected by ECU Bank 2						
	P1228	Fault code set in case of throttle front malfunction						
	P1229	Fault code set in case of throttle rear malfunction						
	P2108 (added)	internal hardware check	Vbatt low	< 6 V			Immediately Continuous	Two trips
	P2101 (added)	rationality check	Requested position vs actuated position	> 1.5%			1 sec Continuous	Two trips
		internal hardware check	CC to GND or CC to batt				Immediately Continuous	
	P2100 (added)	DC Motor open circuit	Open circuit				Immediately Continuous	Two trips
PEDAL POSITION	**P0121**	Functional check	Comparison between sensor "A" and sensor "B"	> 10%			3 sec Continuous	Two trips
	P0122	Pedal position sensor "A" Low Input	Pedal Position (PP) Signal	< 0.05 V			5 sec Continuous	Two trips

® Automobili Lamborghini S.p.A.
The information and procedures published below are strictly confidential and exclusively for the Lamborghini Dealer Network and Authorized Service Points. All copyrights are property of Automobili Lamborghini S.p.A based on copyright law. All of the PDF chapters in the WEB workshop manuals described below are based on information available at the time of publication. The company reserves the right to make updates and modifications. The following are prohibited: reprinting, reproduction, forwarding to unauthorized people and/or third parties, and translation, including partial, without written authorization from Automobili Lamborghini S.p.A.

	P0123	Pedal position sensor “A” High Input / Open Circuit	Pedal Position (PP) Signal	> 4.9 V			5 sec Continuous	Two trips
	P0222	Pedal position sensor “B” Low Input	Pedal Position (PP) Signal	< 0.05 V			5 sec Continuous	Two trips
	P0223	Pedal position sensor “B” High Input / Open Circuit	Pedal Position (PP) Signal	> 4.9 V			5 sec Continuous	Two trips
IDLE CONTROL SYSTEM	**P0506**	Functional check	RPM	RPM_TARGET f(TH2O) - RPM >100 Rpm	Time	> 6 sec	10 times Continuous	Two trips
	P0507	Functional check	RPM Throttle Position Self Learning (TPSL) Throttle Position	RPM_TARGET f(TH2O) - RPM < -200 Rpm TPSL - TPSL last trip > 3.5% Throttle Position = Lower Saturation Throttle Position (2%)	Time TH2O Pedal position Time TH2O Pedal position At Time from cranking function of TH2O at cranking	> 6 sec >70°C and <95°C < 3° > 35 sec >70°C and <95°C <3°	10 times 1 time 1 time Continuous	Two trips
CAN COMMUNICATION	**U0028**	“reading back send message on CAN 1Mb”	CAN message on CAN 1Mb	no feedback from CAN 1Mb			“3 sec Continuous”	Two trips
	U0037	CAN communication with Throttle Module A	CAN message on CAN 500 Kb A	no feedback from CAN 500 Kb			“3 sec Continuous”	Two trips
	U0046	CAN communication with Throttle Module B	CAN message on CAN 500 Kb B	no feedback from CAN 500 Kb			“3 sec Continuous”	Two trips
	U0100	Lost Communication With LIE 1/6	CAN message on CAN 1Mb on LIE 1/6	no feedback from LIE 1/6			“3 sec Continuous”	Two trips
	U0115	Lost Communication With LIE 7/12	CAN message on CAN 1Mb on LIE 7/12	no feedback from LIE 7/12			“3 sec Continuous”	Two trips
INTERNAL CONTROL MODULE	**P0605**	Internal routine	Eeprom Checksum	Actual checksum <> saved checksum			Immediately Once per trip	Two trips
CATALYST TEMPERATURE Bank 1	**P1401**	Catalyst overtemp. 1st lev	Catalyst temp sensor signal	“ 900 °C < T < 940 °C “			Immediately Continuous	Two trips
	P1402	Catalyst overtemp. 2nd lev	Catalyst temp sensor signal	> 940 °C			Immediately Continuous	Two trips
	P0427	Low input / Open circuit	Catalyst temp sensor signal	< 0.25 V (20°C)	TH2O	> 80°C	60 sec Continuous	Two trips

® Automobili Lamborghini S.p.A.
The information and procedures published below are strictly confidential and exclusively for the Lamborghini Dealer Network and Authorized Service Points. All copyrights are property of Automobili Lamborghini S.p.A based on copyright law. All of the PDF chapters in the WEB workshop manuals described below are based on information available at the time of publication. The company reserves the right to make updates and modifications. The following are prohibited: reprinting, reproduction, forwarding to unauthorized people and/or third parties, and translation, including partial, without written authorization from Automobili Lamborghini S.p.A.

	P0428	High input	Catalyst temp sensor signal	>= 12.9 V (>= 970°C)	TH2O	< 50°C	Immediately At Key on	Two trips
CATALYST TEMPE-RATURE Bank 2	**P1405**	Catalyst overtemp. 1st lev	Catalyst temp sensor signal	“900 °C < T < 940 °C “			Same as P1401	Two trips
	P1406	Catalyst overtemp. 2nd lev	Catalyst temp sensor signal	> 940 °C			Same as P1402	Two trips
	P0437	Low input / Open circuit	Catalyst temp sensor signal	< 0.25 V (20°C)	TH2O	> 70°C	Same as P0427	Two trips
	P0438	High input	Catalyst temp sensor signal	>= 12.9 V (>= 970°C)	TH2O	< 50°C	Same as P0428	Two trips
CATALYST TEMPE-RATURE	**P1426**	Functional check	|Catalyst temp sensor signal Bank1 - Ca-talyst temp sensor signal Bank2|	> 200°C			60 sec Continuous	Two trips
OIL TEMPERATURE	**P0197**	Low input	Oil temperature signal output	< 0.10 V (154.1 °C)	Time	> 5 sec	3 times Continuous	Two trips
	P0198	High input / Open circuit	Oil temperature signal output	> 4.9 V (-36.9 °C)	Time	> 5 sec	3 times Continuous	Two trips
V.I.N.	**P0630**	Internal routine	Data	Component found failed			Immediately At Key on	Two trips
INJECTOR 1	**P0261**	Low input/open circuit	Feedback-test	Incorrect data feed-back			Immediately Continuous	Two trips
INJECTOR 1	**P0262**	high input	Same as P0261	Same as P0261			Same as P0261	Two trips
INJECTOR 2	**P0264**	Low input/open circuit	Same as P0261	Same as P0261			Same as P0261	Two trips
INJECTOR 2	**P0265**	high input	Same as P0261	Same as P0261			Same as P0261	Two trips
INJECTOR 3	**P0267**	Low input/open circuit	Same as P0261	Same as P0261			Same as P0261	Two trips
INJECTOR 3	**P0268**	high input	Same as P0261	Same as P0261			Same as P0261	Two trips
INJECTOR 4	**P0270**	Low input/open circuit	Same as P0261	Same as P0261			Same as P0261	Two trips
INJECTOR 4	**P0271**	high input	Same as P0261	Same as P0261			Same as P0261	Two trips
INJECTOR 5	**P0273**	Low input/open circuit	Same as P0261	Same as P0261			Same as P0261	Two trips
INJECTOR 5	**P0274**	high input	Same as P0261	Same as P0261			Same as P0261	Two trips
INJECTOR 6	**P0276**	Low input/open circuit	Same as P0261	Same as P0261			Same as P0261	Two trips
INJECTOR 6	**P0277**	high input	Same as P0261	Same as P0261			Same as P0261	Two trips
INJECTOR 7	**P0279**	Low input/open circuit	Same as P0261	Same as P0261			Same as P0261	Two trips
INJECTOR 7	**P0280**	high input	Same as P0261	Same as P0261			Same as P0261	Two trips
INJECTOR 8	**P0282**	Low input/open circuit	Same as P0261	Same as P0261			Same as P0261	Two trips
INJECTOR 8	**P0283**	high input	Same as P0261	Same as P0261			Same as P0261	Two trips

® Automobili Lamborghini S.p.A.
The information and procedures published below are strictly confidential and exclusively for the Lamborghini Dealer Network and Authorized Service Points. All copyrights are property of Automobili Lamborghini S.p.A based on copyright law. All of the PDF chapters in the WEB workshop manuals described below are based on information available at the time of publication. The company reserves the right to make updates and modifications. The following are prohibited: reprinting, reproduction, forwarding to unauthorized people and/or third parties, and translation, including partial, without written authorization from Automobili Lamborghini S.p.A.

INJECTOR 9	**P0285**	Low input/open circuit	Same as P0261	Same as P0261			Same as P0261	Two trips
INJECTOR 9	**P0286**	high input	Same as P0261	Same as P0261			Same as P0261	Two trips
INJECTOR 10	**P0288**	Low input/open circuit	Same as P0261	Same as P0261			Same as P0261	Two trips
INJECTOR 10	**P0289**	high input	Same as P0261	Same as P0261			Same as P0261	Two trips
INJECTOR 11	**P0291**	Low input/open circuit	Same as P0261	Same as P0261			Same as P0261	Two trips
INJECTOR 11	**P0292**	high input	Same as P0261	Same as P0261			Same as P0261	Two trips
INJECTOR 12	**P0294**	Low input/open circuit	Same as P0261	Same as P0261			Same as P0261	Two trips
INJECTOR 12	**P0295**	high input	Same as P0261	Same as P0261			Same as P0261	Two trips
EXHAUST NOISE CONTROL SYSTEM - Bank 1	**P047F**	Functional check Exhaust Pressure Control Valve Stuck Open	Exhaust pressure signal	< 1.8 V	Airflow through the engine No active DTCs:	> 160 g/rev From P0300 to P0312 P1305, P1306 From P1311 to 1316	5 sec Continuous	Two trips
	P048A	Functional check Exhaust Pressure Control Valve Stuck Closed	Exhaust pressure signal	> 1.8 V	same as P047F	same as P047F	5 sec Continuous	Two trips
	P1317	Fault code set in case of ENCS malfunction detected by ECU Bank 1					Immediately Continuous	Two trips
EXHAUST NOISE CONTROL SYSTEM - Bank 2	**P047F**	Functional check Exhaust Pressure Control Valve Stuck Open	Exhaust pressure signal	< 1.8 V	same as P047F	same as P047F	5 sec Continuous	Two trips
	P048A	Functional check Exhaust Pressure Control Valve Stuck Closed	Exhaust pressure signal	> 1.8 V	same as P047F	same as P047F	5 sec Continuous	Two trips
	P1318	Fault code set in case of ENCS malfunction detected by ECU Bank 2					Immediately Continuous	Two trips
EXHAUST NOISE CONTROL ELECTRO VALVE	**P1476**	Exhaust Pressure Control Electro-Valve low/open circuit	Feedback-test	No coherence data	Key	On	Immediately Continuous	Two trips
	P1477	Exhaust Pressure Control Electro-Valve high input	Feedback-test	No coherence data	Key	On	Immediately Continuous	Two trips

® Automobili Lamborghini S.p.A.
The information and procedures published below are strictly confidential and exclusively for the Lamborghini Dealer Network and Authorized Service Points. All copyrights are property of Automobili Lamborghini S.p.A based on copyright law. All of the PDF chapters in the WEB workshop manuals described below are based on information available at the time of publication. The company reserves the right to make updates and modifications. The following are prohibited: reprinting, reproduction, forwarding to unauthorized people and/or third parties, and translation, including partial, without written authorization from Automobili Lamborghini S.p.A.

ELECTRONIC TRANSMISSION								
CLUTCH POSITION SENSOR	**P0807**	Signal Low	Voltage range check	Signal < 0.49 V			> 0.04 sec	One trip
	P0808	Signal high	Voltage range check	Signal > 4.64 V			> 0.04 sec	One trip
	P0806	Rationality	System Rationality	Signal = 2.5 V	Engine Gear Vehicle speed	On Engaged < 6.2 mph	> 0.04 sec	One trip
SHIFT POSITION SENSOR	**P2791**	Signal Low	Voltage range check	Signal < 0.24 V			> 0.5 sec	Two trips
	P2792	Signal high	Voltage range check	Signal > 4.64 V			> 0.5 sec	Two trips
GEAR POSITION SENSOR	**P2794**	Signal Low	Voltage range check	Signal < 0.49 V			> 0.5 sec	Two trips
	P2795	Signal high	Voltage range check	Signal > 4.64 V			> 0.5 sec	Two trips
HYDRAULIC OIL PRESSURE	**P0934**	Signal Low	Voltage range check	Signal < 0.24 V			> 6 sec	Two trips
	P0935	Signal high	Voltage range check	Signal > 4.64 V			> 6 sec	Two trips
ENGINE SPEED SIGNAL	**P0725**	Rationality check	Signal range check	Signal = 0	Engine	On	Immediately	Two trips
CLUTCH SPEED SIGNAL	**P0715**	Rationality check	Signal range check	Signal = 0	Engine Clutch or RPM Gear	On Closed > 60 rpm Engaged	Immediately Continuous	Two trips
DRIVELINE SPEED SIGNAL	**P0720**	Plausibility	Signal range check CAN Information	Signal = 0 CAN Fault Inf.	Engine Clutch or IN_RPM > 2500 rpm and gear engaged	On Closed	Continuous	Two trips
HYDRAULIC PUMP RELAY	**P0947**	Signal Low	I/O Driver plausibility	Valve current not congruent with the command			Continuous	Two trips
	P0948	Signal high					Immediately	
TCM POWER RELAY	**P0885**	Signal Low stuck contact contact never closed	System Rationality	TCM voltage supply < 6 V Relay status not congruent with the command	 Relay commanded Relay commanded	 Off On	Immediately Continuous	Two trips
TCM COMMUNICATION	**U0101**	Lost Communication with TCM	CAN message on CAN 500 Kb A	incorrect data feed-back			0.35 sec Continuous	Two trips
ELECTRO VALVES	**P0787**	Signal Low	I/O Driver plausibility	Valve current not congruent with the command			Immediately Continuous	Two trips
	P0788	Signal high	I/O Driver plausibility	Valve current not congruent with the command			Immediately Continuous	Two trips

® Automobili Lamborghini S.p.A.
The information and procedures published below are strictly confidential and exclusively for the Lamborghini Dealer Network and Authorized Service Points. All copyrights are property of Automobili Lamborghini S.p.A based on copyright law. All of the PDF chapters in the WEB workshop manuals described below are based on information available at the time of publication. The company reserves the right to make updates and modifications. The following are prohibited: reprinting, reproduction, forwarding to unauthorized people and/or third parties, and translation, including partial, without written authorization from Automobili Lamborghini S.p.A.

INCORRECT GEAR RATIO	**P0730**	Rationality check	Functional check	Driveline speed per gear ratio / engine speed > 300 rpm and Driveline speed per gear ratio / clutch speed > 300	Clutch Gearshift Vehicle speed	Closed not in progress > 12.5 mph	0.35 sec Continuous	Two trips
SHIFT ERROR	**P0780**	Rationality check	Functional check	Gear engaged is not the requested one	Clutch Gearshift	Open in progress	Immediately Continuous	Two trips

® Automobili Lamborghini S.p.A.
The information and procedures published below are strictly confidential and exclusively for the Lamborghini Dealer Network and Authorized Service Points. All copyrights are property of Automobili Lamborghini S.p.A based on copyright law. All of the PDF chapters in the WEB workshop manuals described below are based on information available at the time of publication. The company reserves the right to make updates and modifications. The following are prohibited: reprinting, reproduction, forwarding to unauthorized people and/or third parties, and translation, including partial, without written authorization from Automobili Lamborghini S.p.A.

Clutch control diagnosis

1. Turn the ignition key to ON.

2. Connect the computer to the OBDII diagnosis outlet, launch the LaRa-AS system, and select the "**Analysis**" mode.

3. Press the "**Measurement file**" icon and then select **Read_Clutch_murcielago.dra** (**Fig.1**).

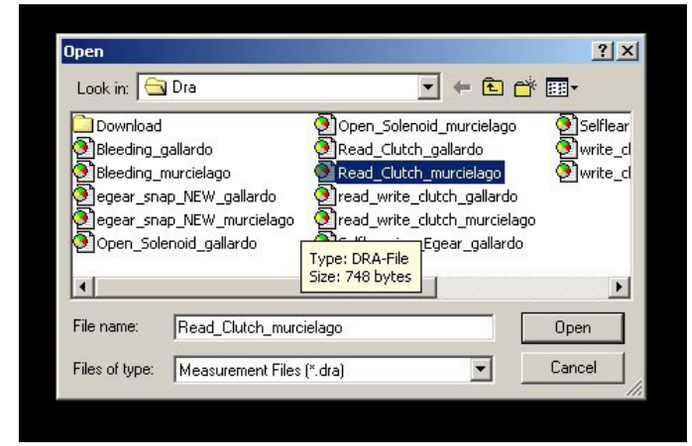

Fig.1

4. The LaRa-AS system displays a window which allows the clutch wear data to be saved in a file (.xlm o .txt) customizable with the VIN of the car in question and the name of the person carrying out the test (**Fig.2**).

Note
Entering this data in the window is not obligatory. The system also automatically saves a file containing clutch wear. This file may then be renamed and saved in a special folder chosen by the user.

5. Press OK to start the clutch wear reading.

Fig.2

® Automobili Lamborghini S.p.A.
The information and procedures published below are strictly confidential and exclusively for the Lamborghini Dealer Network and Authorized Service Points. All copyrights are property of Automobili Lamborghini S.p.A based on copyright law. All of the PDF chapters in the WEB workshop manuals described below are based on information available at the time of publication. The company reserves the right to make updates and modifications. The following are prohibited: reprinting, reproduction, forwarding to unauthorized people and/or third parties, and translation, including partial, without written authorization from Automobili Lamborghini S.p.A.

6. The window of the current "**Read_Clutch_murcielago**" measurement file appears (**Fig.3**). Wait for the reading to finish.

Note
After data acquisition, the system displays the results in a .txt file; disregard this file by closing the window.

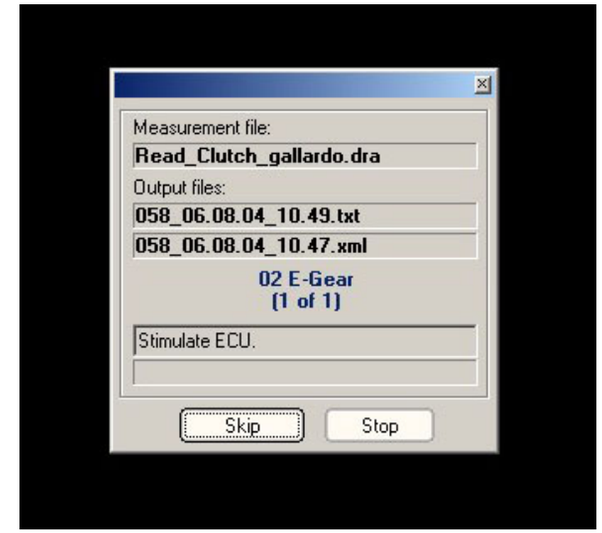

Fig.3

Display clutch wear as follows:

7. Open the pull-down menu (**A-Fig.4**) and select **Log files..**; select the LaRa-AS.log file from the Log files folder.

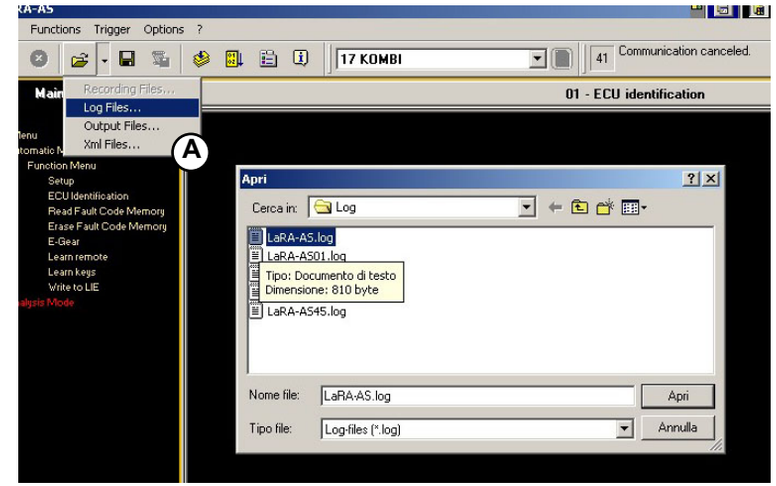

Fig.4

® Automobili Lamborghini S.p.A.
The information and procedures published below are strictly confidential and exclusively for the Lamborghini Dealer Network and Authorized Service Points. All copyrights are property of Automobili Lamborghini S.p.A based on copyright law. All of the PDF chapters in the WEB workshop manuals described below are based on information available at the time of publication. The company reserves the right to make updates and modifications. The following are prohibited: reprinting, reproduction, forwarding to unauthorized people and/or third parties, and translation, including partial, without written authorization from Automobili Lamborghini S.p.A.

8. Display the LaRa-AS.log file.

This file reports the reading of **channel 19 (current clutch thickness) (B-Fig.5) and channel 27 (thickness of a new clutch) (C-Fig.5).**
The line (**D-Fig.5**) reports the difference between the two values mentioned above. (the difference in the figure is zero because the clutch is new).

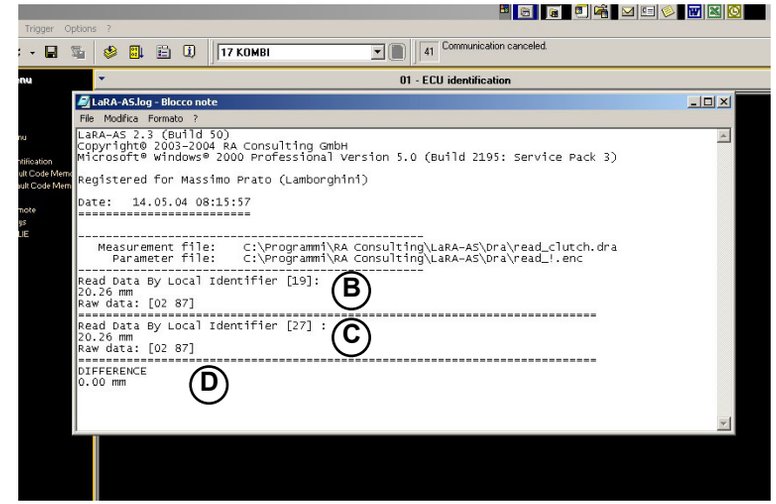

Fig.5

IMPORTANT!
The clutch must be replaced when the wear is equal to or more than 7.6 mm (014103).

Note
If clutch wear is normal with e-gear operation anomalies, check the e-gear system using the proper procedure **(109114)**.

IMPORTANT!
The clutch readings must be taken while the engine is cold. If they are taken while the engine is hot, the results will not be accurate.

The data regarding engine dragging is read on channel **9 (RPM)** and channel **10 (PRIMARY SHAFT) (Fig.6).**

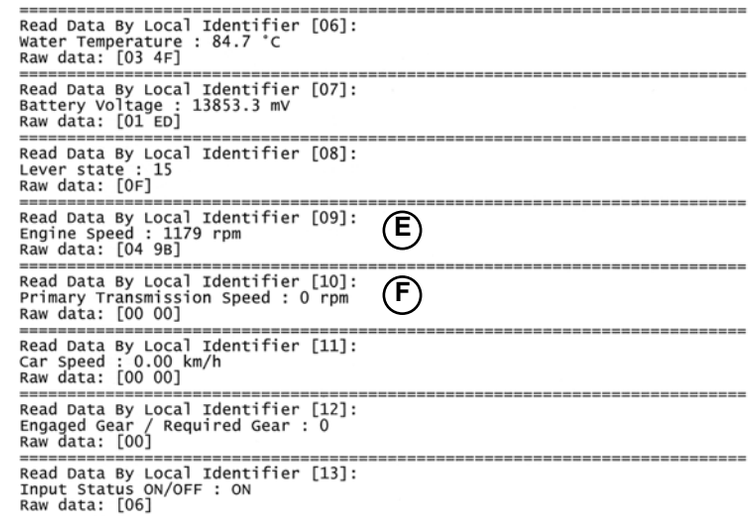

Fig.6

IMPORTANT!
When the system is in neutral, the engine's speed must never exceed 250 rpm; if this value is exceeded, the clutch is damaged and must be replaced.

Note
The test on channels 9 (E-Fig.6) and 10 (F-Fig.6) should be carried out while the engine is running.

® Automobili Lamborghini S.p.A.
The information and procedures published below are strictly confidential and exclusively for the Lamborghini Dealer Network and Authorized Service Points. All copyrights are property of Automobili Lamborghini S.p.A based on copyright law. All of the PDF chapters in the WEB workshop manuals described below are based on information available at the time of publication. The company reserves the right to make updates and modifications. The following are prohibited: reprinting, reproduction, forwarding to unauthorized people and/or third parties, and translation, including partial, without written authorization from Automobili Lamborghini S.p.A.

ABS diagnosis

ABS diagnosis is performed by a special computer program using the OBD II interface. In the event of a malfunction, restore the system's proper operation by means of the Troubleshooting Table. The same program is essential for guaranteeing a final check of the system after every maintenance operation.

STOP

Remember that if the dashboard warning light turns on and/or the buzzer sounds at the same time, the ABS system is not working.
In this situation, braking is no longer moderated by the electronic control or braking distribution and is therefore fully controlled by the driver.
Absolutely avoid sudden braking as this could cause the wheels to lock.

The program can be used in two ways:

- To display alarms stored in the control unit, which may be reset, if necessary; This procedure is extremely useful during the initial phase to see whether errors are present and if they are present after ABS system maintenance.
- Full test, which requires an operator: The program wizard helps the operator step by step in executing the checks in the correct sequence, activating, when necessary, the ABS system. The full test requires lifting the car and two operators, one on board for using the computer and the other on the ground for checking wheel braking. This test is, in any case, essential for guaranteeing the ABS system's proper operation after significant maintenance operations such as, for example, replacement of the ABS control unit or the entire wiring harness.

The full test does not carry out diagnosis, it only checks for proper operation: To carry out diagnosis, use the errors stored in the control unit.

® Automobili Lamborghini S.p.A.
The information and procedures published below are strictly confidential and exclusively for the Lamborghini Dealer Network and Authorized Service Points. All copyrights are property of Automobili Lamborghini S.p.A based on copyright law. All of the PDF chapters in the WEB workshop manuals described below are based on information available at the time of publication. The company reserves the right to make updates and modifications. The following are prohibited: reprinting, reproduction, forwarding to unauthorized people and/or third parties, and translation, including partial, without written authorization from Automobili Lamborghini S.p.A.

ABS error codes

Error messages	Operation to reset the ABS system
LF open or shorted sensor	LF wheel pick-up sensor short circuit or disconnected. Check wiring and connectors.
LF missing sensor or tone ring	No signal from LF wheel pick-up sensor or not reading phonic wheel correctly.
LF sensor drop-out	Signal from LF wheel pick-up sensor is interrupted frequently. Check pick-up sensor and mounting.
RF open or shorted sensor	RF wheel pick-up sensor short circuit or disconnected. Check wiring and connectors.
RF missing sensor or tone ring	No signal from RF wheel pick-up sensor or not reading phonic wheel correctly.
RF sensor drop-out	Signal from RF wheel pick-up sensor is interrupted frequently. Check pick-up sensor and mounting.
LR open or shorted sensor	LR wheel pick-up sensor short circuit or disconnected. Check wiring and connectors.
LR missing sensor or tone ring	No signal from LR wheel pick-up sensor or not reading phonic wheel correctly.
LR sensor drop-out	Signal from LR wheel pick-up sensor is interrupted frequently. Check pick-up sensor and mounting.
RR open or shorted sensor	RR wheel pick-up sensor short circuit or disconnected. Check wiring and connectors.
RR missing sensor or tone ring	No signal from RR wheel pick-up sensor or not reading phonic wheel correctly.
RR sensor drop-out	Signal from RR wheel pick-up sensor is interrupted frequently. Check pick-up sensor and mounting.

® Automobili Lamborghini S.p.A.
The information and procedures published below are strictly confidential and exclusively for the Lamborghini Dealer Network and Authorized Service Points. All copyrights are property of Automobili Lamborghini S.p.A based on copyright law. All of the PDF chapters in the WEB workshop manuals described below are based on information available at the time of publication. The company reserves the right to make updates and modifications. The following are prohibited: reprinting, reproduction, forwarding to unauthorized people and/or third parties, and translation, including partial, without written authorization from Automobili Lamborghini S.p.A.

Error messages	Operation to reset the ABS system
LF shorted DMP or open driver	LF wheel DMP valve driver short circuit or jammed open. Check wiring or replace control unit.
LF open DMP or shorted driver	LF wheel DMP valve driver disconnected or jammed closed. Check wiring or replace control unit.
LF shorted ISO or open driver	LF wheel ISO valve driver short circuit or jammed open. Check wiring or replace control unit.
LF open ISO or shorted driver	LF wheel ISO valve driver disconnected or jammed closed. Check wiring or replace control unit.
RF shorted DMP or open driver	RF wheel DMP valve driver short circuit or jammed open. Check wiring or replace control unit.
RF open DMP or shorted driver	RF wheel DMP valve driver disconnected or jammed closed. Check wiring or replace control unit.
RF shorted ISO or open driver	RF wheel ISO valve driver short circuit or jammed open. Check wiring or replace control unit.
RF open ISO or shorted driver	RF wheel ISO valve driver disconnected or jammed closed. Check wiring or replace control unit.
LR shorted DMP or open driver	LR wheel DMP valve driver short circuit or jammed open. Check wiring or replace control unit.
LR open DMP or shorted driver	LR wheel DMP valve driver disconnected or jammed closed. Check wiring or replace control unit.
LR shorted ISO or open driver	LR wheel ISO valve driver short circuit or jammed open. Check wiring or replace control unit.

® Automobili Lamborghini S.p.A.
The information and procedures published below are strictly confidential and exclusively for the Lamborghini Dealer Network and Authorized Service Points. All copyrights are property of Automobili Lamborghini S.p.A based on copyright law. All of the PDF chapters in the WEB workshop manuals described below are based on information available at the time of publication. The company reserves the right to make updates and modifications. The following are prohibited: reprinting, reproduction, forwarding to unauthorized people and/or third parties, and translation, including partial, without written authorization from Automobili Lamborghini S.p.A.

Error messages	Operation to reset the ABS system
LR open ISO or shorted driver	LR wheel ISO valve driver disconnected or jammed closed. Check wiring or replace control unit.
RR shorted DMP or open driver	RR wheel DMP valve driver short circuit or jammed open. Check wiring or replace control unit.
RR open DMP or shorted driver	RR wheel DMP valve driver disconnected or jammed closed. Check wiring or replace control unit.
RR shorted ISO or open driver	RR wheel ISO valve driver short circuit or jammed open. Check wiring or replace control unit.
RR open ISO or shorted driver	RR wheel ISO valve driver disconnected or jammed closed. Check wiring or replace control unit.
open pump motor	Electro-hydraulic unit pump circuit open. Replace control unit.
bad motor driver	Electro-hydraulic unit pump malfunction. Replace control unit.
shorted pump motor	Electro-hydraulic unit pump motor short. Replace control unit.
shorted relay	ECU internal relay always closed. Replace control unit.
open relay	ECU internal relay always open. Replace control unit.
bad relay driver	ECU internal relay malfunction. Replace control unit.
stuck or inoperative brake switch	Brake/ABS switch malfunction. Check and replace if necessary.
yellow warning lamp shorted to battery	ABS warning light shorted to +12V.
yellow warning lamp shorted to ground	ABS warning light shorted to ground.

® Automobili Lamborghini S.p.A.
The information and procedures published below are strictly confidential and exclusively for the Lamborghini Dealer Network and Authorized Service Points. All copyrights are property of Automobili Lamborghini S.p.A based on copyright law. All of the PDF chapters in the WEB workshop manuals described below are based on information available at the time of publication. The company reserves the right to make updates and modifications. The following are prohibited: reprinting, reproduction, forwarding to unauthorized people and/or third parties, and translation, including partial, without written authorization from Automobili Lamborghini S.p.A.

Error messages	Operation to reset the ABS system
wheel speed error	Speed difference on one or more wheels 20%.
mismatched wheel speeds	Wheel speeds are incompatible.
wheel speed difference 8/16 bit CPU	Electronic unit CPU fault.
vehicle inhibit code	ABS control unit code is invalid.
excessive ISO time out	ISO valve activation time exceeded. The valve can be damaged.
CPU loop time error	CPU internal clock error.
excessive DMP time out	DMP valve activation time exceeded. The valve can be damaged.
inoperative external watch-dog	Relay control circuit malfunction.
RAM/ROM error 8 bit	ROM/RAM fault.
ROM error 16 bit	ROM/RAM fault.
RAM error 16 bit	ROM/RAM fault.
valve coil circuit - battery voltage > 16V	Valve actuator voltage > 16V
valve coil circuit - battery voltage < 9V	Valve actuator voltage < 9V
valve coil circuit - battery voltage < 9.5V	Valve actuator voltage < 9.5V

® Automobili Lamborghini S.p.A.
The information and procedures published below are strictly confidential and exclusively for the Lamborghini Dealer Network and Authorized Service Points. All copyrights are property of Automobili Lamborghini S.p.A based on copyright law. All of the PDF chapters in the WEB workshop manuals described below are based on information available at the time of publication. The company reserves the right to make updates and modifications. The following are prohibited: reprinting, reproduction, forwarding to unauthorized people and/or third parties, and translation, including partial, without written authorization from Automobili Lamborghini S.p.A.

ABS diagnosis connection (Fig.1):

1. Computer
2. ABS/AIRBAG selector
3. OBD II connector

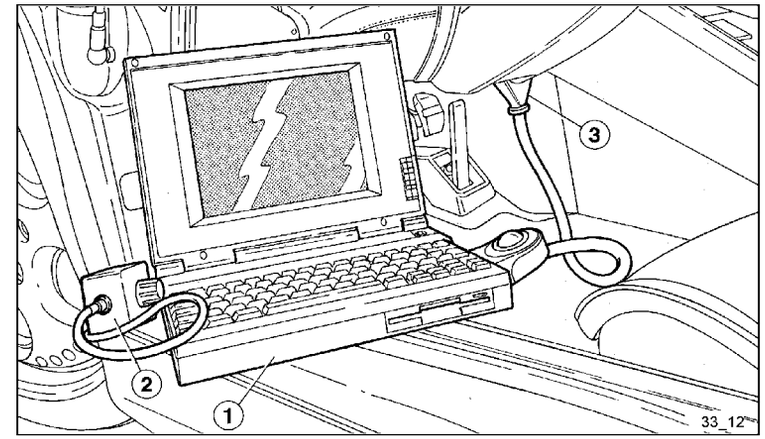

Fig.1

Diagnosis connection procedure:

1. Switch on the computer.
2. Connect the RS232 interface first to the computer's COM1 serial port and then to the OBD II connector. The OBD II connector is located under the dashboard on the driver side towards the central tunnel. Set the interface selector to ABS.
3. Connect the battery isolator and turn the ignition key to ON.
4. Start the ABS program by double clicking on the ABS icon.
5. Make sure that the computer's antivirus safety feature is not on.
The safety feature deactivates COM ONE.

® Automobili Lamborghini S.p.A.
The information and procedures published below are strictly confidential and exclusively for the Lamborghini Dealer Network and Authorized Service Points. All copyrights are property of Automobili Lamborghini S.p.A based on copyright law. All of the PDF chapters in the WEB workshop manuals described below are based on information available at the time of publication. The company reserves the right to make updates and modifications. The following are prohibited: reprinting, reproduction, forwarding to unauthorized people and/or third parties, and translation, including partial, without written authorization from Automobili Lamborghini S.p.A.

Start screen (Fig.2)

When entering the program, language selection may be required: Select it clicking with the mouse. The selected language is the default language. This request may be avoided when the program is subsequently launched by disabling the “Show this dialog….” toggle.

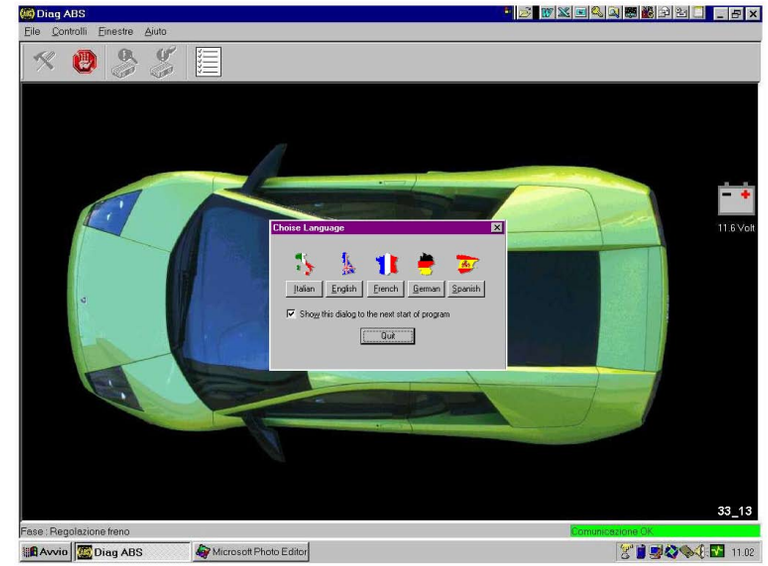

Fig.2

® Automobili Lamborghini S.p.A.
The information and procedures published below are strictly confidential and exclusively for the Lamborghini Dealer Network and Authorized Service Points. All copyrights are property of Automobili Lamborghini S.p.A based on copyright law. All of the PDF chapters in the WEB workshop manuals described below are based on information available at the time of publication. The company reserves the right to make updates and modifications. The following are prohibited: reprinting, reproduction, forwarding to unauthorized people and/or third parties, and translation, including partial, without written authorization from Automobili Lamborghini S.p.A.

Click “Checks” and then “Alarm Display” (**Fig.3**).

Fig.3

or click on the button on the control bar.

The alarms are displayed in a table (**Fig.4**) showing whether they are still activated (historical report).

The first column shows an alarm description.
The second column shows the alarms that are currently active.
The third column shows the “old” alarms that currently do not affect unit operation.

Note the currently active alarms.
Delete all of the alarms (see next screen).
Carry out the reset operations shown in the troubleshooting table.

Eventi

Errori	Presente	Storico
LF open or shorted sensor	✔	
RF open or shorted sensor	✔	
LR open or shorted sensor	✔	
RR open or shorted sensor	✔	

Fig.4

® Automobili Lamborghini S.p.A.
The information and procedures published below are strictly confidential and exclusively for the Lamborghini Dealer Network and Authorized Service Points. All copyrights are property of Automobili Lamborghini S.p.A based on copyright law. All of the PDF chapters in the WEB workshop manuals described below are based on information available at the time of publication. The company reserves the right to make updates and modifications. The following are prohibited: reprinting, reproduction, forwarding to unauthorized people and/or third parties, and translation, including partial, without written authorization from Automobili Lamborghini S.p.A.

Select “Checks” and “Delete errors” (**Fig.5**).

Fig.5

or click on the icon.

After deletion, the “No Alarms” message indicates that no alarms are stored in the control unit.

® Automobili Lamborghini S.p.A.
The information and procedures published below are strictly confidential and exclusively for the Lamborghini Dealer Network and Authorized Service Points. All copyrights are property of Automobili Lamborghini S.p.A based on copyright law. All of the PDF chapters in the WEB workshop manuals described below are based on information available at the time of publication. The company reserves the right to make updates and modifications. The following are prohibited: reprinting, reproduction, forwarding to unauthorized people and/or third parties, and translation, including partial, without written authorization from Automobili Lamborghini S.p.A.

General Overview

The test consists of a sequence of predefined steps related to specified checks. At the end a report is displayed to show check results.
The sequence of proposed checks may be interrupted, the errors in the control unit may be displayed, repairs may be carried out, and the test can be restarted at any time. The report (with the results of the checks carried out up to that moment) may be displayed at any time.

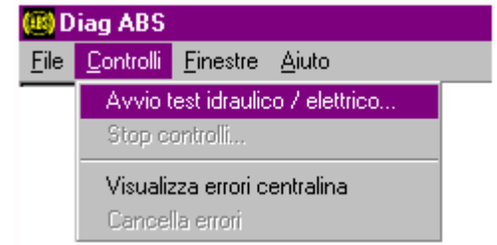

Fig.6

The full test includes:

1. Data acquisition from the control unit and data entry by the operator
2. Displaying of all the alarms, both current and “historical”, stored in the control unit: See the procedures mentioned above.
3. ABS system hydraulic/electric test
4. Displaying of the final report

To start the full test, proceed as follows:
Click on “Checks” and then “Start hydraulic/electric test” (**Fig.6**)

or click on the icon.

® Automobili Lamborghini S.p.A.
The information and procedures published below are strictly confidential and exclusively for the Lamborghini Dealer Network and Authorized Service Points. All copyrights are property of Automobili Lamborghini S.p.A based on copyright law. All of the PDF chapters in the WEB workshop manuals described below are based on information available at the time of publication. The company reserves the right to make updates and modifications. The following are prohibited: reprinting, reproduction, forwarding to unauthorized people and/or third parties, and translation, including partial, without written authorization from Automobili Lamborghini S.p.A.

Data acquisition from the control unit and data entry by the operator

After the full test has been started, the program reads certain control unit information, which is then shown on the screen below (**Fig.7**).

The program also asks the operator to enter certain information on the screen in order for the test to continue.
This information is:

- Operator: Enter the operator's last name and first name (the system can save up to 3);
- Car model;
- Chassis number;
- Notes: For entering observations that will appear in the final report.

Communication between the control unit and the program remains active during data entry.

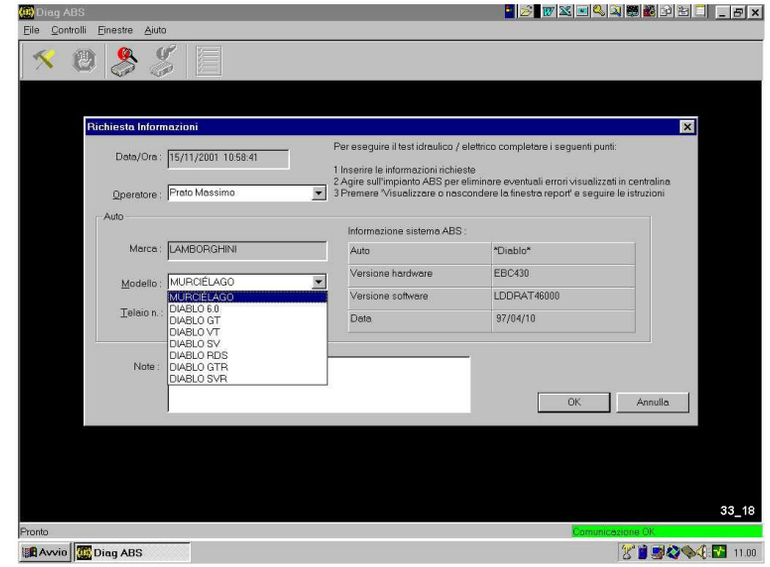

Fig.7

® Automobili Lamborghini S.p.A.
The information and procedures published below are strictly confidential and exclusively for the Lamborghini Dealer Network and Authorized Service Points. All copyrights are property of Automobili Lamborghini S.p.A based on copyright law. All of the PDF chapters in the WEB workshop manuals described below are based on information available at the time of publication. The company reserves the right to make updates and modifications. The following are prohibited: reprinting, reproduction, forwarding to unauthorized people and/or third parties, and translation, including partial, without written authorization from Automobili Lamborghini S.p.A.

ABS system hydraulic/electric test

This test is divided into several steps:

1. Brake pedal check and adjustment;
2. Wheel speed sensors check;
3. Left front wheel hydraulic/electric system check;
4. Right front wheel hydraulic/electric system check;
5. Left rear wheel hydraulic/electric system check;
6. Right rear wheel hydraulic/electric system check;

The program wizard helps the operator carry out the various phases on the screens showing information about the step currently being carried out and explanations of the operations to be performed.
The test starts when the alarms screen is closed: A screen with the image of the car model in question appears (**Fig.8**).

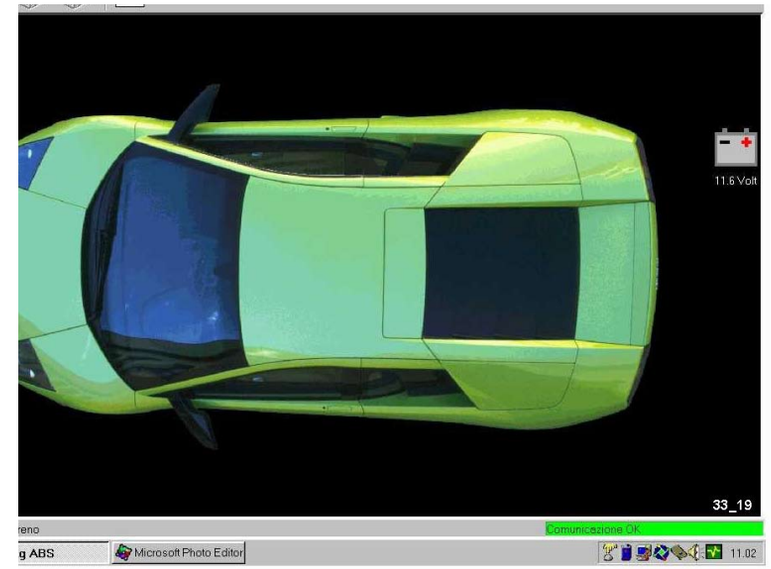

Fig.8

® Automobili Lamborghini S.p.A.
The information and procedures published below are strictly confidential and exclusively for the Lamborghini Dealer Network and Authorized Service Points. All copyrights are property of Automobili Lamborghini S.p.A based on copyright law. All of the PDF chapters in the WEB workshop manuals described below are based on information available at the time of publication. The company reserves the right to make updates and modifications. The following are prohibited: reprinting, reproduction, forwarding to unauthorized people and/or third parties, and translation, including partial, without written authorization from Automobili Lamborghini S.p.A.

Brake pedal check and adjustment

The purpose of this step is to check brake switch operation and to verify pedal stroke before activating the switch.

After the operator confirms in the dialog box, the program waits until it receives the brake switch activation signal: The operator must slowly press the brake pedal.
The program waits until it receives the signal. The test cannot continue until this happens. When the brake switch signal is received, the icon shown in the figure appears (**Fig.9**).

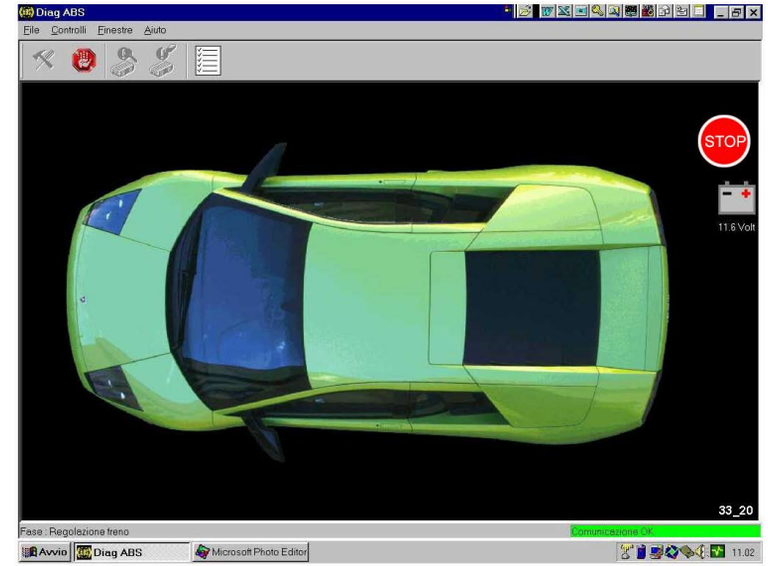

Fig.9

® Automobili Lamborghini S.p.A.
The information and procedures published below are strictly confidential and exclusively for the Lamborghini Dealer Network and Authorized Service Points. All copyrights are property of Automobili Lamborghini S.p.A based on copyright law. All of the PDF chapters in the WEB workshop manuals described below are based on information available at the time of publication. The company reserves the right to make updates and modifications. The following are prohibited: reprinting, reproduction, forwarding to unauthorized people and/or third parties, and translation, including partial, without written authorization from Automobili Lamborghini S.p.A.

Wheel speed sensors check

The purpose of this step is to check for proper operation of the speed sensors of the four wheels and to determine the minimum activation threshold of each sensor.

To carry out the check:

- Lift the car;
- Start the engine and bring the speed to approximately 15 km/h;
- Place the gear in neutral.

As the wheel speed decreases, the speed of each wheel appears on the screen in the square of the relevant wheel. The test is passed when all four squares are green (**Fig.10**).
This means that the minimum threshold for each sensor has been determined and all are below 7 km/h.
If the minimum threshold of one or more sensors is above 7 km/h, the test was failed and subsequent tests cannot be carried out.

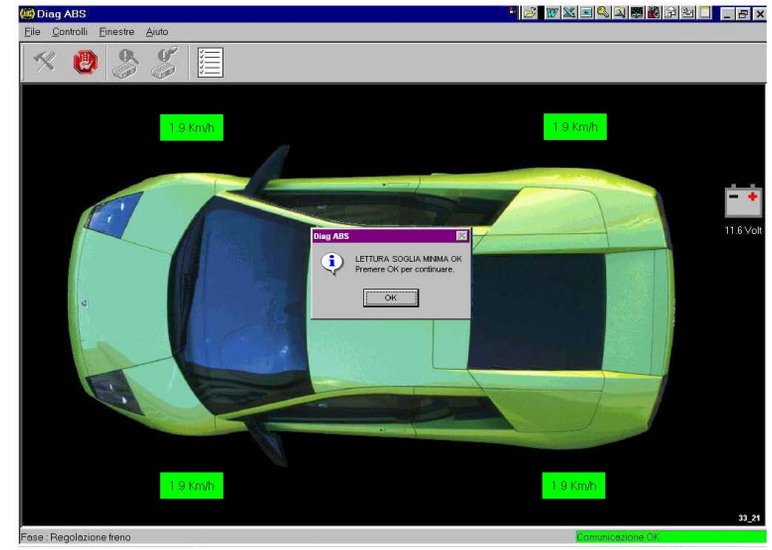

Fig.10

® Automobili Lamborghini S.p.A.
The information and procedures published below are strictly confidential and exclusively for the Lamborghini Dealer Network and Authorized Service Points. All copyrights are property of Automobili Lamborghini S.p.A based on copyright law. All of the PDF chapters in the WEB workshop manuals described below are based on information available at the time of publication. The company reserves the right to make updates and modifications. The following are prohibited: reprinting, reproduction, forwarding to unauthorized people and/or third parties, and translation, including partial, without written authorization from Automobili Lamborghini S.p.A.

Check of a wheel's hydraulic/electric system

This test requires two operators: one on board for the requested braking operations and use of the computer and the other on the ground for checking the wheels.
The following procedure must be carried out for each wheel:
The wheel test sequence is:

- Left front wheel;
- Right front wheel;
- Left rear wheel;
- Right rear wheel.

The purpose of this step is to check proper operation of the hydraulic/electric system of each wheel.
For each wheel, the program activates the ISO and DUMP solenoid valve sequence and starts the pump to detect hydraulic system leaks or electric system malfunctioning.
The operator has approximately 60 seconds to complete the test on each wheel: After this time, the program displays a "TO" (time out) message for the wheel being tested.

The three steps that must be passed are the following:

- ISO solenoid valve activation;
- ISO solenoid valve deactivation for 500 msec;
- DUMP solenoid valve activation, pump activation for 3 sec. and DUMP solenoid valve deactivation.

ISO solenoid valve activation

During this step the program displays the "Free?" message in the square corresponding to the wheel being tested, asking the operator to verify whether the wheel rotates freely.
If the wheel rotates freely the program goes on to the next step.
If the wheel is locked, the square becomes red and the "Error 2" message is displayed. The program starts to check the next wheel.

® Automobili Lamborghini S.p.A.
The information and procedures published below are strictly confidential and exclusively for the Lamborghini Dealer Network and Authorized Service Points. All copyrights are property of Automobili Lamborghini S.p.A based on copyright law. All of the PDF chapters in the WEB workshop manuals described below are based on information available at the time of publication. The company reserves the right to make updates and modifications. The following are prohibited: reprinting, reproduction, forwarding to unauthorized people and/or third parties, and translation, including partial, without written authorization from Automobili Lamborghini S.p.A.

ISO solenoid valve deactivation for 500 msec

During this step the program displays the “Locked?” message in the square corresponding to the wheel being tested, asking the operator to verify whether the wheel is locked.
If the wheel is locked the program goes on to the next step.
If the wheel rotates freely, the square becomes red and the “Error 8” message is displayed. The program starts to check the next wheel.

DUMP solenoid valve activation, pump activation for 3 sec. and DUMP solenoid valve deactivation

During this step the program displays the “Free?” message in the square corresponding to the wheel being tested, asking the operator to verify whether the wheel rotates freely.
If the wheel rotates freely, the square becomes green and the “OK” message is displayed.
If the wheel is locked, the square becomes red and the “Error 8” message is displayed. The program starts to check the next wheel.

® Automobili Lamborghini S.p.A.
The information and procedures published below are strictly confidential and exclusively for the Lamborghini Dealer Network and Authorized Service Points. All copyrights are property of Automobili Lamborghini S.p.A based on copyright law. All of the PDF chapters in the WEB workshop manuals described below are based on information available at the time of publication. The company reserves the right to make updates and modifications. The following are prohibited: reprinting, reproduction, forwarding to unauthorized people and/or third parties, and translation, including partial, without written authorization from Automobili Lamborghini S.p.A.

Displaying of the final report

After the hydraulic/electric test is completed, the program automatically displays the final report showing the results of each test (**Fig.11**).

In addition to displaying the results on the screen, this information may also be saved in a .txt file, whose name is automatically defined by the chassis number entered by the operator.

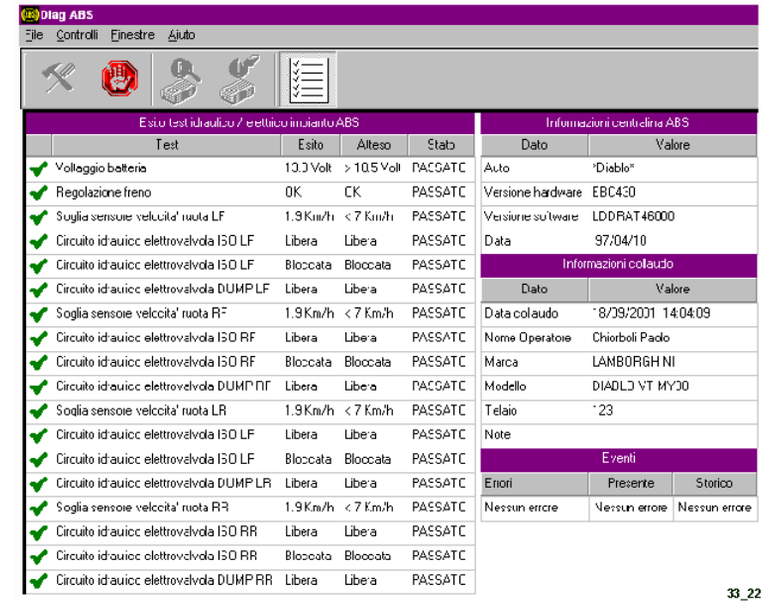

Fig.11

The report can be displayed at any time during the full test.
Click on “Windows” and then on “Display or hide report window” (**Fig.12**)

or click on the icon.

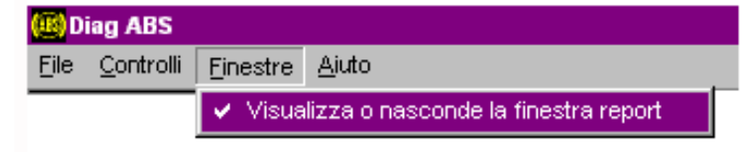

Fig.12

® Automobili Lamborghini S.p.A.
The information and procedures published below are strictly confidential and exclusively for the Lamborghini Dealer Network and Authorized Service Points. All copyrights are property of Automobili Lamborghini S.p.A based on copyright law. All of the PDF chapters in the WEB workshop manuals described below are based on information available at the time of publication. The company reserves the right to make updates and modifications. The following are prohibited: reprinting, reproduction, forwarding to unauthorized people and/or third parties, and translation, including partial, without written authorization from Automobili Lamborghini S.p.A.

Air conditioning

The control unit is located in the A/C push button panel in the dash board sets the parameters in order to adjust the passenger compartment temperature to the temperature requested by the user. In particular:

- acquires information on internal and outside temperature and on solar irradiation intensity by means of specific sensors;
- sets the air intake speed by means of a fan;
- controls the air recirculation function by means of an actuator;
- sets the air intake temperature by means of a mixing tap;
- controls the compressor operation by means of an electromagnetic coupling.

1.	Control unit
2.	Outside air temperature
3.	Internal air temperature
4.	Vent outlet temperature
5.	Solar irradiation
6.	Distribution actuator
7.	Motor fan
8.	Recirculation actuator
9.	Mixing tap
10.	Compressor

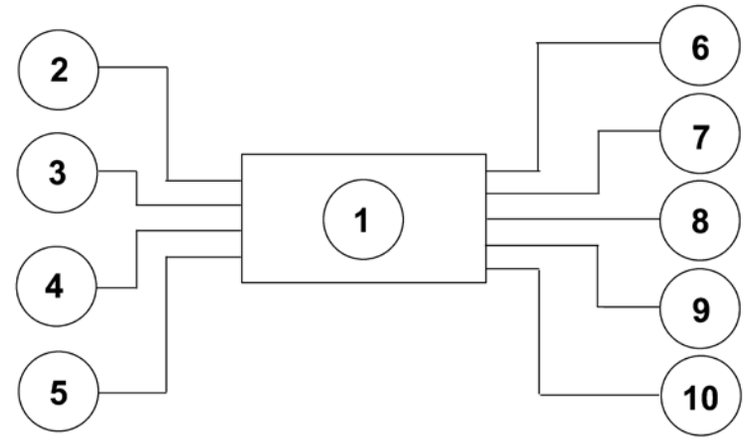

Fig.1

The control unit (**1-Fig.1**) implements the heat regulating strategies according to the signal inputs from:

- outside air temperature (**2-Fig.1**);
- internal air temperature (**3-Fig.1**);
- Vent outlet air temperature (**4-Fig.1**);
- Solar irradiation (**5-Fig.1**).

The control unit memory contains a resident program, composed of a set of strategies; each of which manages a specific function of the control system. The strategies process a set of parameters by means of the above inputs and memorized data maps. These parameters control the system actuators (outputs), that is those devices causing the system to reach and hold a heating comfort inside the passenger compartment. The devices are the following:

- Distribution actuator (**6-Fig.1**);
- Motor fan (**7-Fig.1**);
- Recirculation actuator (**8-Fig.1**);
- Mixing tap (**9-Fig.1**);
- Compressor (**10-Fig.1**).

® Automobili Lamborghini S.p.A.
Le procedure e le informazioni pubblicate di seguito sono strettamente confidenziali e rivolte esclusivamente alla Rete Dealer e Service Point Autorizzati Lamborghini. Tutti i diritti d'autore sono proprietà di Automobili Lamborghini S.p.A in base alla legge sui diritti d'autore. Tutti i capitoli PDF di cui si compongono i manuali officina WEB descritti di seguito, si basano sulle informazioni disponibili al momento della pubblicazione. Con riserva di aggiornamento e modifiche. Sono vietate: la ristampa, la riproduzione, l'inoltro a persone non autorizzate e/o a terze persone, la traduzione anche parziale senza l'autorizzazione scritta da parte di Automobili Lamborghini S.p.A.

Codici errore climatizzatore

La centralina di controllo esegue in maniera continuativa durante il funzionamento una diagnosi dei vari componenti l'impianto, allo scopo di accertarne in ogni istante il buon funzionamento. Qualora venisse rilevato un malfunzionamento di qualche componente, il display visualizza un codice di errore alternativamente alla temperatura richiesta. I codici visualizzati, con relativo significato, sono riportati in tabella (codici esadecimali):

CODICE	SIGNIFICATO
E0	sensore TA (circuito aperto)
E1	sensore TT1 (circuito aperto)
E2	sensore TT2 (circuito aperto)
E3	sensore TSAB (circuito aperto)
E4	sensore TE (circuito aperto)
E5	sensore TA (corto circuito)
E6	sensore TT1 (corto circuito)
E7	sensore TT2 (corto circuito)
E8	sensore TSAB (corto circuito)
E9	sensore TE (corto circuito)
EA	miscelatore bloccato durante l'identificazione
EB	alimentazioni miscelatore invertite
EC	sensore IRR (circuito aperto)
ED	sensore IRR (corto circuito)
EE	sovratemperatura regolatore velocità ventilatore I I

significato delle abbreviazioni utilizzate è il seguente:
TT1: temperatura alle bocchette superiori
TT2: temperatura alle bocchette inferiori
TA: temperatura abitacolo
TE: temperatura esterna
TR: temperatura richiesta (impostata sul display)
TSAB: temperatura sensore antibrina
IRR: irraggiamento solare

Alla scomparsa dell'errore viene ripristinato il funzionamento normale.

® Automobili Lamborghini S.p.A.
Le procedure e le informazioni pubblicate di seguito sono strettamente confidenziali e rivolte esclusivamente alla Rete Dealer e Service Point Autorizzati Lamborghini. Tutti i diritti d'autore sono proprietà di Automobili Lamborghini S.p.A in base alla legge sui diritti d'autore. Tutti i capitoli PDF di cui si compongono i manuali officina WEB descritti di seguito, si basano sulle informazioni disponibili al momento della pubblicazione. Con riserva di aggiornamento e modifiche. Sono vietate: la ristampa, la riproduzione, l'inoltro a persone non autorizzate e/o a terze persone, la traduzione anche parziale senza l'autorizzazione scritta da parte di Automobili Lamborghini S.p.A.

All'insorgere di una delle condizioni di errore sopraelencate, il sistema pone in atto dei programmi di recovery dell'errore atti a garantire un funzionamento comunque accettabile del sistema.

In particolare:

- errore sensore TA: viene posto TA = TR;
- errore sensore TE: viene posto TE = TA;
- errore sensore TT1, TT2: viene modificato il calcolo della temperatura da ottenere;
- errore TSAB: viene disinserito il compressore;
- errore IRR: viene considerato un irraggiamento medio.

Non esiste la possibilità di recovery per gli errori sui motori degli attuatori.

® Automobili Lamborghini S.p.A.
The information and procedures published below are strictly confidential and exclusively for the Lamborghini Dealer Network and Authorized Service Points. All copyrights are property of Automobili Lamborghini S.p.A based on copyright law. All of the PDF chapters in the WEB workshop manuals described below are based on information available at the time of publication. The company reserves the right to make updates and modifications. The following are prohibited: reprinting, reproduction, forwarding to unauthorized people and/or third parties, and translation, including partial, without written authorization from Automobili Lamborghini S.p.A.

AIR CONDITIONING DIAGNOSIS

The system offers the possibility of running a set of diagnostic tests by means of special button combinations without the use of specific diagnostic tools.

Starting

User diagnostics is started by turning the ignition switch to ON and holding the RECIRCULATION button pressed at the same time.

Quitting

Turn the ignition switch to OFF. The engine identification procedure will be started when the switch is turned to ON again.

User diagnosis presents a sequence of four diagnostic statuses:

- display test status;
- button test status;
- sensor test status;
- actuator test status.

The test status sequence is determined by the control unit and cannot be changed by the user.

® Automobili Lamborghini S.p.A.
The information and procedures published below are strictly confidential and exclusively for the Lamborghini Dealer Network and Authorized Service Points. All copyrights are property of Automobili Lamborghini S.p.A based on copyright law. All of the PDF chapters in the WEB workshop manuals described below are based on information available at the time of publication. The company reserves the right to make updates and modifications. The following are prohibited: reprinting, reproduction, forwarding to unauthorized people and/or third parties, and translation, including partial, without written authorization from Automobili Lamborghini S.p.A.

DISPLAY TEST

Turn the ignition switch to ON. A first portion of the display will light up for a few seconds, followed by a second portion and then the entire device to test operation.
The display will go out after a few seconds and the first fan speed indication will light up to indicate that the test is done.

- To switch to buttons test: Press AIR+.

® Automobili Lamborghini S.p.A.
The information and procedures published below are strictly confidential and exclusively for the Lamborghini Dealer Network and Authorized Service Points. All copyrights are property of Automobili Lamborghini S.p.A based on copyright law. All of the PDF chapters in the WEB workshop manuals described below are based on information available at the time of publication. The company reserves the right to make updates and modifications. The following are prohibited: reprinting, reproduction, forwarding to unauthorized people and/or third parties, and translation, including partial, without written authorization from Automobili Lamborghini S.p.A.

Button test

The second fan speed indication will light up to indicate that this phase has started.
During this part of the diagnostic test procedure, a numeric code will appear on the display each time a button is pressed: The correspondence is shown in the table below.
The button will be faulty if no code appears.

BUTTON	POS.	CODE
TEMP +	1	10
TEMP -	2	7
AIR +	3	4
AIR –	4	1
VENT	5	11
BILEVEL	6	8
HEAT	7	5
DEFROST	8	2
TEXT	9	9
AUTO	10	6
RECIRCULATION	11	3

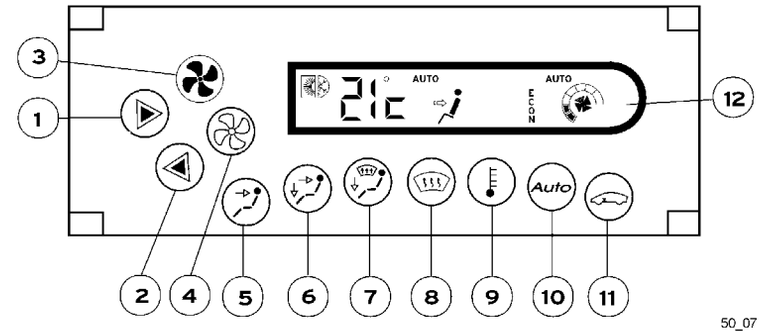

50_07
Fig.1

- Check all buttons in order to go to the next test.
- To go back to display test: Press AIR -.
- To switch to sensor test: Press AIR +.

® Automobili Lamborghini S.p.A.
The information and procedures published below are strictly confidential and exclusively for the Lamborghini Dealer Network and Authorized Service Points. All copyrights are property of Automobili Lamborghini S.p.A based on copyright law. All of the PDF chapters in the WEB workshop manuals described below are based on information available at the time of publication. The company reserves the right to make updates and modifications. The following are prohibited: reprinting, reproduction, forwarding to unauthorized people and/or third parties, and translation, including partial, without written authorization from Automobili Lamborghini S.p.A.

Sensor test

The third fan speed will light up to indicate that this phase has started.
During this part of the diagnostic test procedure, the values output by each selected sensor will appear on the display each time a button is pressed: The correspondence is shown in the table below.

TESTED SENSOR	BUTTON TO BE PRESSED	POS.
Passenger compartment temperature (TA)	TEMP +	1
Outside temperature (TE)	TEMP -	2
Upper vent temperature (TT1)	VENT	5
Lower vent temperature (TT2)	BILEVEL	6
Solar irradiation (IRR)	DEFROST	8
Frost sensor temperature (TSAB)	HEAT	7

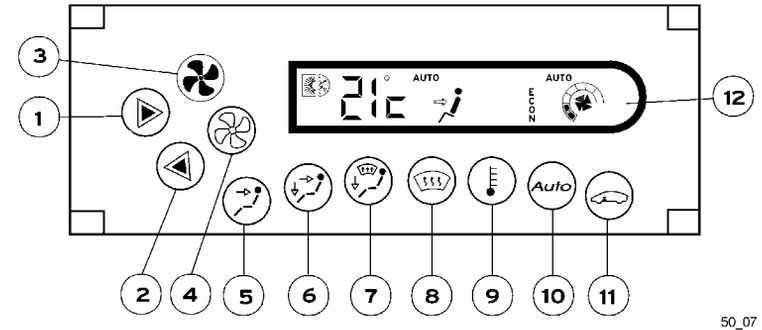

50_07
Fig.2

The temperature will be expressed either in degrees Celsius or degrees Fahrenheit according to the setting made before the diagnostic test procedure was run.

The solar irradiation sensor reading shown is a percentage of the supposed maximum value of 1,000 W/m 2, approximately corresponding to summer irradiation in southern European latitudes.

- Press AIR - to go back to the button test.
- Press AIR + to go to the actuator test.

® Automobili Lamborghini S.p.A.
The information and procedures published below are strictly confidential and exclusively for the Lamborghini Dealer Network and Authorized Service Points. All copyrights are property of Automobili Lamborghini S.p.A based on copyright law. All of the PDF chapters in the WEB workshop manuals described below are based on information available at the time of publication. The company reserves the right to make updates and modifications. The following are prohibited: reprinting, reproduction, forwarding to unauthorized people and/or third parties, and translation, including partial, without written authorization from Automobili Lamborghini S.p.A.

Actuator, compressor, fan test

The fourth fan speed will light up to indicate that this phase has started.
During this part of the diagnostic test procedure, the position of each selected actuator will appear each time a button is pressed. The correspondence is shown in the table below.

TESTED ACTUATOR	BUTTON TO BE PRESSED	POS.
Mixer	VENT	5
Recirculation	BILEVEL	6
Compressor	HEAT	7
Fan	DEFROST	8
FLOOR flap motor	TEXT	9
VENT flap motor	RECIRCULATION	11
DEFROST flap motor	AUTO	10

STOP **Press TEMP+ and TEMP- to operate the selected actuator in the required direction.**

- Press AIR - button to go back to the sensor test.
- Press AIR + button to go to the display test.

® Automobili Lamborghini S.p.A.
The information and procedures published below are strictly confidential and exclusively for the Lamborghini Dealer Network and Authorized Service Points. All copyrights are property of Automobili Lamborghini S.p.A based on copyright law. All of the PDF chapters in the WEB workshop manuals described below are based on information available at the time of publication. The company reserves the right to make updates and modifications. The following are prohibited: reprinting, reproduction, forwarding to unauthorized people and/or third parties, and translation, including partial, without written authorization from Automobili Lamborghini S.p.A.

LaRa-AS DIAGNOSIS SYSTEM

Connection to the diagnosis outlet and system start up

- Switch on the PC (**A-Fig.1**);
- connect the adapter (**B-Fig.1**) to the PC parallel port;
- turn the ignition key OFF;
- connect the adapter to the OBDII connector (**C-Fig.1**) in the car, located on the right of the steering column.
- turn the ignition key ON.

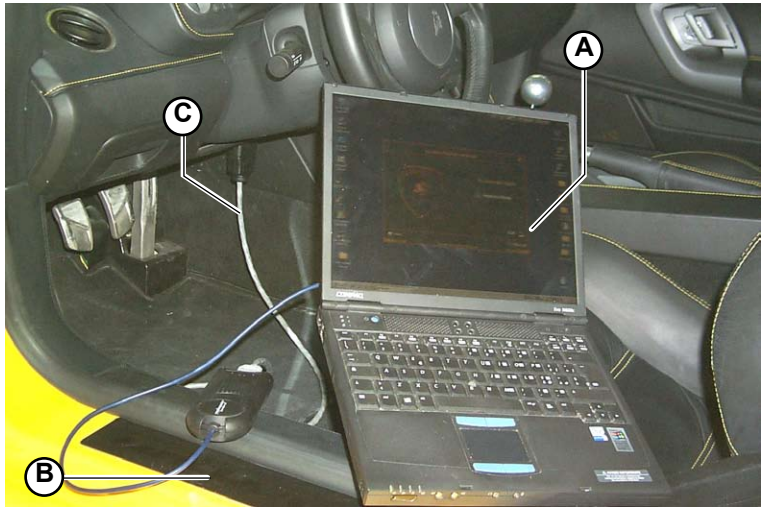

Fig.1

- start the LaRa-AS program by double clicking the

icon on the desktop.
- The system starts automatically, showing the last screen opened on the car's display (**Fig.2**).

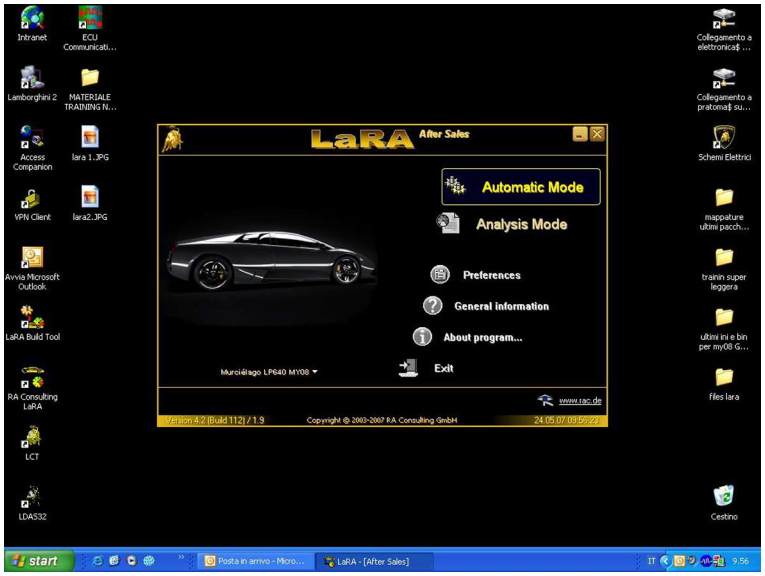

Fig.2

® Automobili Lamborghini S.p.A.
The information and procedures published below are strictly confidential and exclusively for the Lamborghini Dealer Network and Authorized Service Points. All copyrights are property of Automobili Lamborghini S.p.A based on copyright law. All of the PDF chapters in the WEB workshop manuals described below are based on information available at the time of publication. The company reserves the right to make updates and modifications. The following are prohibited: reprinting, reproduction, forwarding to unauthorized people and/or third parties, and translation, including partial, without written authorization from Automobili Lamborghini S.p.A.

Note

The selected car may be changed by clicking on the arrow next to “Murciélago LP640 MY09” (**A-Fig.3**):

- Gallardo Coupé MY04-08
- Gallardo Spyder MY06-08
- Gallardo Coupé MY09
- Murcielago MY04-07
- Murcielago LP640 MY08
- Murcielago LP640 MY09

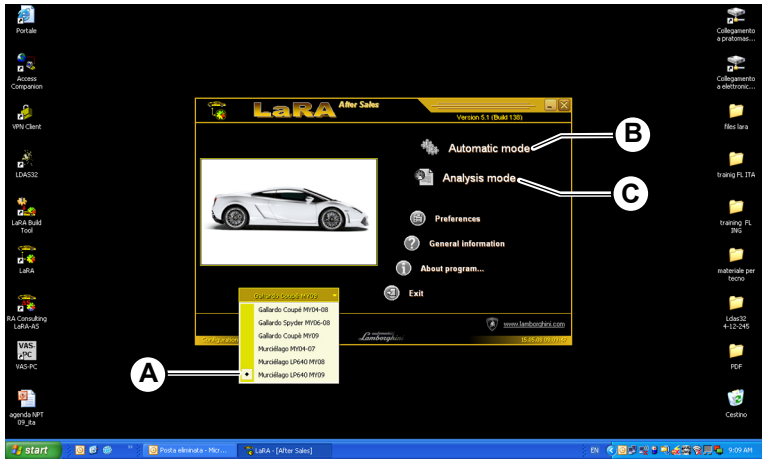

Fig.3

The Murcielago LaRa-AS system features the following function modes:

- **Automatic Mode (B-Fig.3):** allows a series of tasks to be carried out automatically such as set up for rewriting the LIE and GFA software.

- **Analysis mode (C-Fig.3):** allows accurate control of every electronic device on board the car (see list).

® Automobili Lamborghini S.p.A.
The information and procedures published below are strictly confidential and exclusively for the Lamborghini Dealer Network and Authorized Service Points. All copyrights are property of Automobili Lamborghini S.p.A based on copyright law. All of the PDF chapters in the WEB workshop manuals described below are based on information available at the time of publication. The company reserves the right to make updates and modifications. The following are prohibited: reprinting, reproduction, forwarding to unauthorized people and/or third parties, and translation, including partial, without written authorization from Automobili Lamborghini S.p.A.

AUTOMATIC MODE

In automatic mode the system automatically reads the car VIN which appears in the field (**A-Fig.4**) and allows access to the automatic setting functions.

The car VIN is stored in the GFA. If the GFA is replaced, the VIN cannot be read automatically and the LaRa-AS system displays a series of Xs in the field (**A-Fig.4**).

In these situations, the VIN on the new GFA must be rewritten using the relative management file (write VIN murcielago) by accessing “Analysis” mode and, when finished, reconnecting with “Automatic mode” (see page 11)

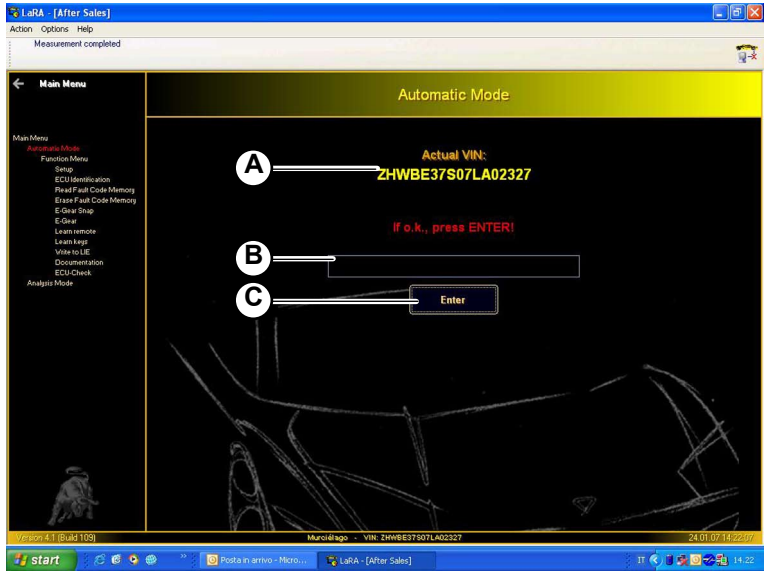

Fig.4

Note
For “Automatic mode”, use the **BASIC.XS** cable **(000200-48a)** and the cable for LARA-AS diagnostics interface **(000200-48b)**.

This menu appears after the car VIN has been recognised (**Fig.5**):

Set up	a window from where it is possible to automatically program replaced control units with the original car data is displayed. This function needs to be enabled by the zip file.
ECU Check	the hardware and software of the ECUs against the Lamborghini database.
Documentation	automatically compiles a car file when the vehicle arrives at the dealer and then receives the correct car file with all of the automatic functions enabled.
E.Gear Snap	the E-gear parameters can be read in automatic mode.

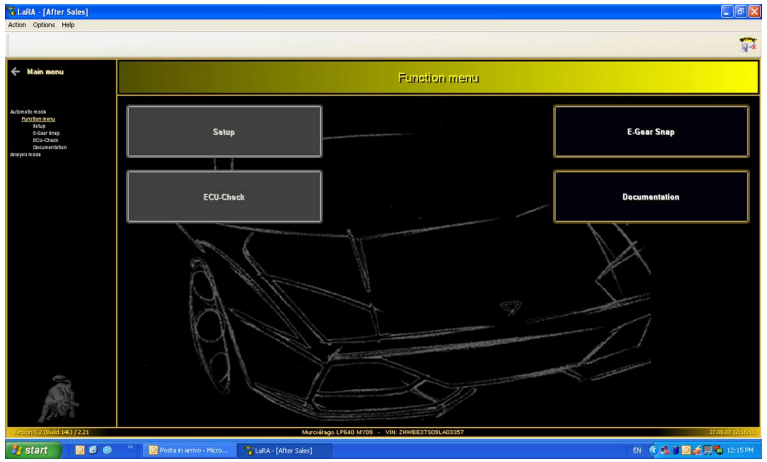

Fig.5

Note
The SET UP and ECU-CHECK functions are enabled only after the correct car file (zip file) has been uploaded.

® Automobili Lamborghini S.p.A.
The information and procedures published below are strictly confidential and exclusively for the Lamborghini Dealer Network and Authorized Service Points. All copyrights are property of Automobili Lamborghini S.p.A based on copyright law. All of the PDF chapters in the WEB workshop manuals described below are based on information available at the time of publication. The company reserves the right to make updates and modifications. The following are prohibited: reprinting, reproduction, forwarding to unauthorized people and/or third parties, and translation, including partial, without written authorization from Automobili Lamborghini S.p.A.

Documentation

The car's zip file is uploaded from this screen (**Fig.6**).

To begin uploading, click "Yes" (**A-Fig.6**).

Note
Before uploading, disconnect from the car and connect to the Internet.

To upload later, click "No" (**B-Fig.6**).

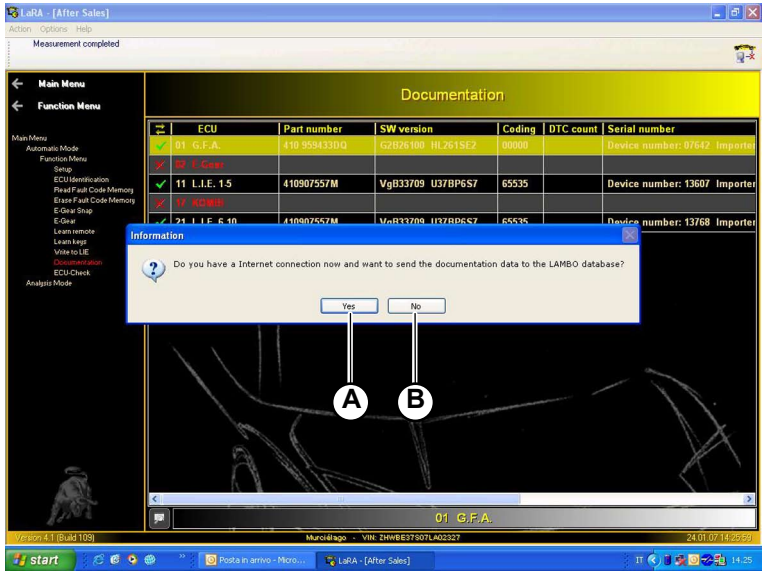

Fig.6

After connecting to the Lamborghini site, the token's "Username" and "Password" must be entered (**A-Fig.7**).

Press "OK" (**B-Fig.7**) to start uploading the zip file.

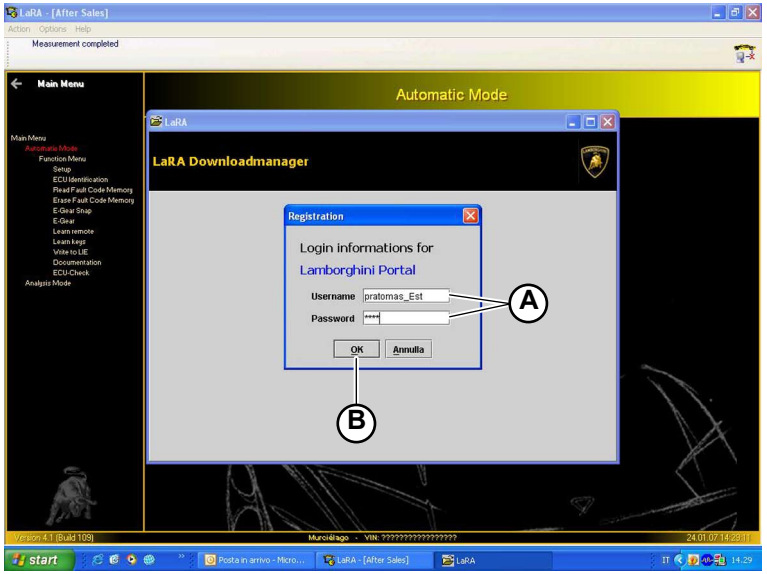

Fig.7

® Automobili Lamborghini S.p.A.
The information and procedures published below are strictly confidential and exclusively for the Lamborghini Dealer Network and Authorized Service Points. All copyrights are property of Automobili Lamborghini S.p.A based on copyright law. All of the PDF chapters in the WEB workshop manuals described below are based on information available at the time of publication. The company reserves the right to make updates and modifications. The following are prohibited: reprinting, reproduction, forwarding to unauthorized people and/or third parties, and translation, including partial, without written authorization from Automobili Lamborghini S.p.A.

When uploading of the correct car file has finished, click “Close” (**A-Fig.8**) to disconnect from the Internet.

After disconnecting, the system automatically places the zip file within the software.

Note
The zip file, to which all of the car’s information corresponds expires one week after it is received. The system will then automatically delete it, after which the uploading procedure must be repeated from the beginning.

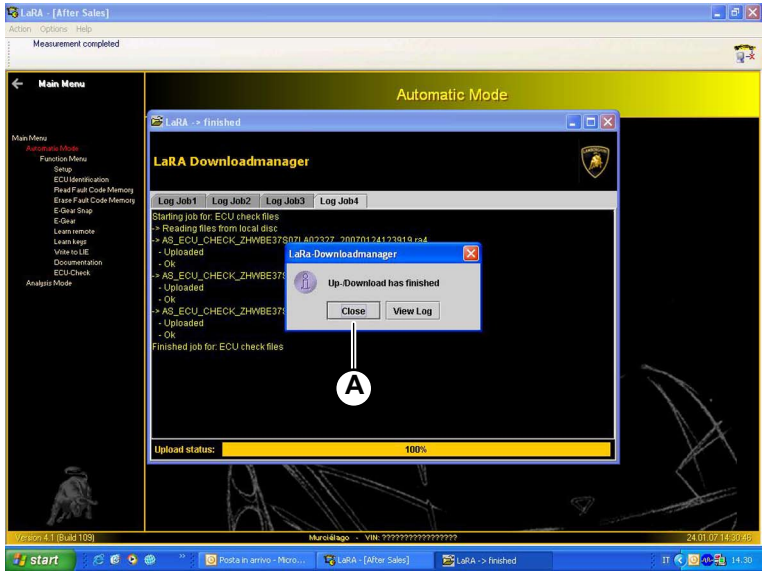

Fig.8

After disconnecting from the Internet, reconnect to the car using the cable for diagnosis. Select “Automatic Mode”. The system reconnects to the car, recognizing the chassis number (written on GFA). Then press “Enter” (**C-Fig.4**) to access the automatic functions that the system provides (**Fig.9**).

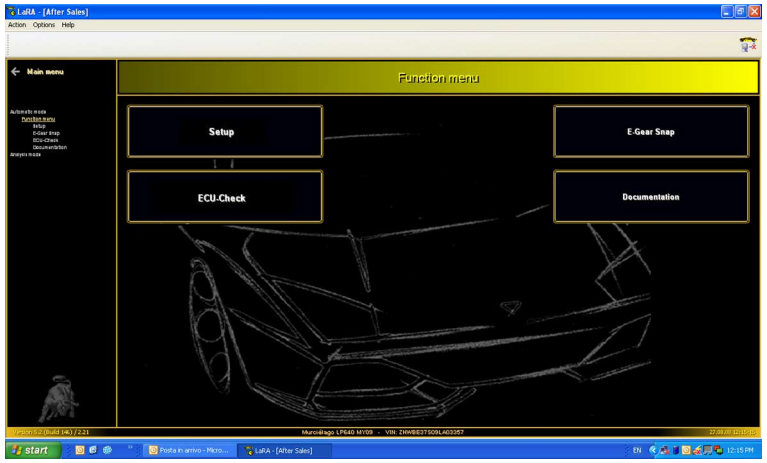

Fig.9

® Automobili Lamborghini S.p.A.
The information and procedures published below are strictly confidential and exclusively for the Lamborghini Dealer Network and Authorized Service Points. All copyrights are property of Automobili Lamborghini S.p.A based on copyright law. All of the PDF chapters in the WEB workshop manuals described below are based on information available at the time of publication. The company reserves the right to make updates and modifications. The following are prohibited: reprinting, reproduction, forwarding to unauthorized people and/or third parties, and translation, including partial, without written authorization from Automobili Lamborghini S.p.A.

Set Up

The setup screen is only accessible when the information contained in the car zip file is available and that is after the zip file has been installed.

The screen lists the ECUs on board the car.
After selecting the ECU which must be set up (only LIE and GFA), continue with the next step to reflash them.

Note
Every ECU can be selected (even if they have not been replaced); there is no problem if original ECUs are rewritten. However, rewriting procedures take time and sometimes require intervention by the operator.
It is not possible to select more than one ECU at a time.

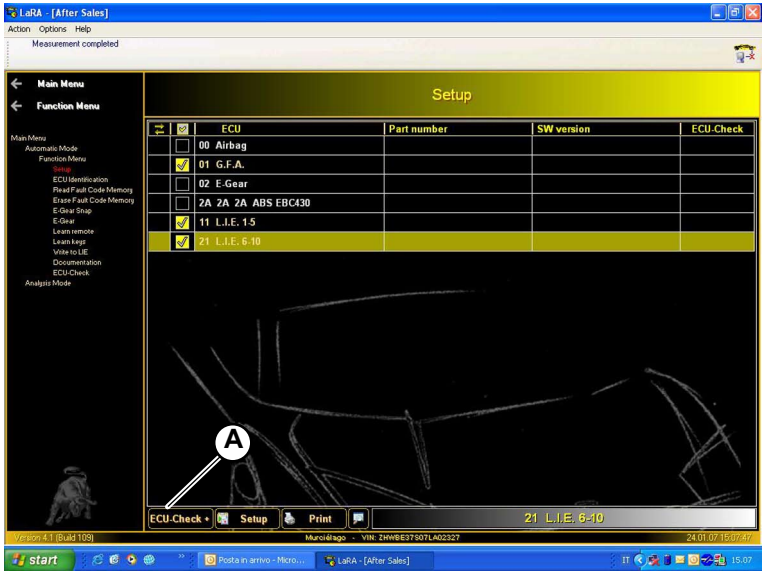

Fig.10

Reflashing and connecting to the LDAS system

After selecting the ECUs and clicking on the **"ECU Check"** key (**A-Fig.10**), the system checks the status of the ECUs and requests confirmation (**Fig.11**) to continue with reflashing.

Note
This message appears even if the check is not successful. The operator must decide whether to proceed.
If the decision is made to proceed, the engine's control cable (CAN line) must be connected, without disconnecting the xs basic cable: two cables will therefore be simultaneously connected to the car.

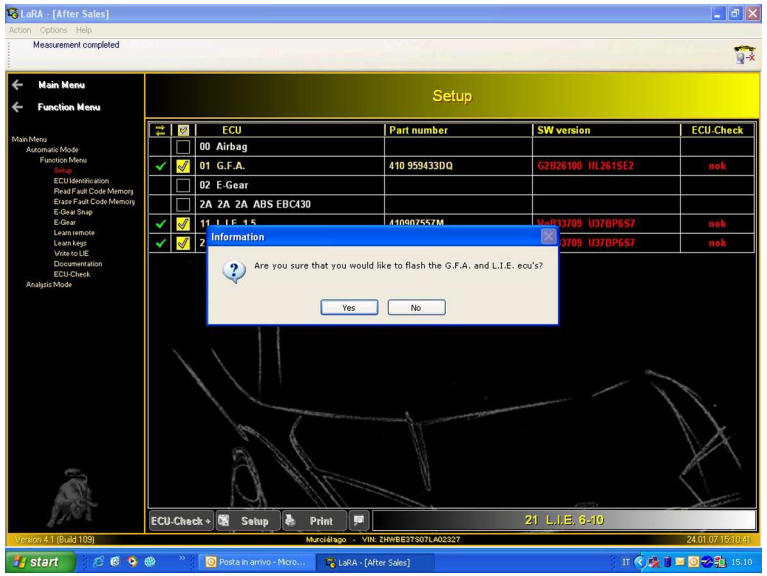

Fig.11

® Automobili Lamborghini S.p.A.
The information and procedures published below are strictly confidential and exclusively for the Lamborghini Dealer Network and Authorized Service Points. All copyrights are property of Automobili Lamborghini S.p.A based on copyright law. All of the PDF chapters in the WEB workshop manuals described below are based on information available at the time of publication. The company reserves the right to make updates and modifications. The following are prohibited: reprinting, reproduction, forwarding to unauthorized people and/or third parties, and translation, including partial, without written authorization from Automobili Lamborghini S.p.A.

After accepting reflash on the previous screen, the system automatically connects to the LDAS system (**Fig.12**), starting the procedure using the previously received car files: at this point, let the software run; the system will do everything automatically.

Note
This operation can be carried out as often as desired, within one week after receiving the zip file, after which the system will automatically eliminate the possibility of connecting with the zip file.

Note
The system rewrites and updates the software but not the VIN on the GFA (for this operation, see page 11). The VIN must only be rewritten if the GFA is replaced and not for reflashing.

After reflashing, the system proposes connecting to the Web site again to immediately send the results to Lamborghini.
If you would like to send the data at another time, the system will store the information until the next time it is connected to the site, during which it will automatically download the files.

Note
Simply wait for the procedure to end. The system starts and finishes automatically.

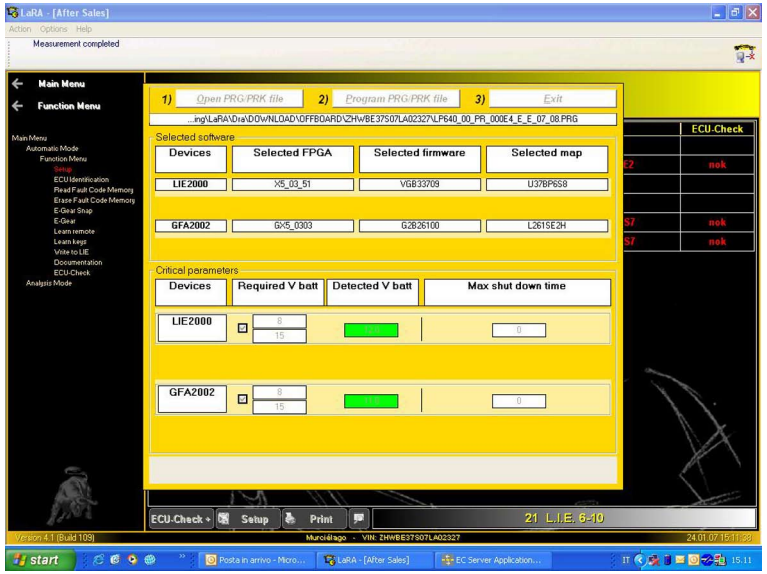

Fig.12

ECU Check

The status of the ECUs are verified from this screen (**Fig.13**), analyzing:
- Part number
- SW version
- Status

Note
This screen is enabled only if the system contains the information in the car's zip file.

Specific note for <u>USA model (from MY08)</u>:
If the GFA is replaced, carry out the following operations:
- write the VIN using the specific measurement file (select "write to lie").
- select "ecu check" using setup function (the writing procedure of the updated software is activated).
- when finished, always in the setup section, select "setup" (the control unit is codified).

If this final operation is not carried out, the control unit will remain RW programmed and then the USA homologation requests will not be satisfied.

Fig.13

® Automobili Lamborghini S.p.A.
The information and procedures published below are strictly confidential and exclusively for the Lamborghini Dealer Network and Authorized Service Points. All copyrights are property of Automobili Lamborghini S.p.A based on copyright law. All of the PDF chapters in the WEB workshop manuals described below are based on information available at the time of publication. The company reserves the right to make updates and modifications. The following are prohibited: reprinting, reproduction, forwarding to unauthorized people and/or third parties, and translation, including partial, without written authorization from Automobili Lamborghini S.p.A.

E.Gear Snap

Click **"E.Gear Snap"** (**Fig.14**) to access the screen from where it is possible to store the e-gear system data. The system consults the gearbox control unit and creates an .xlm file.

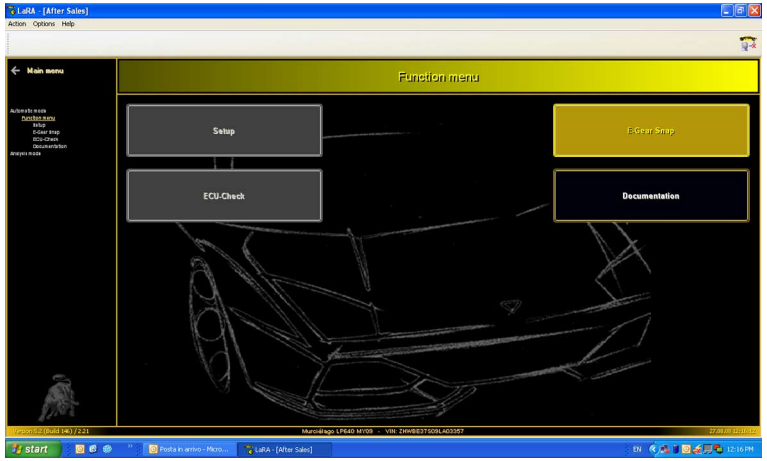

Fig.14

The .xlm file can be sent to Lamborghini for diagnosis or troubleshooting (**Fig.15**).
This file is also stored automatically in the .xlm folder.

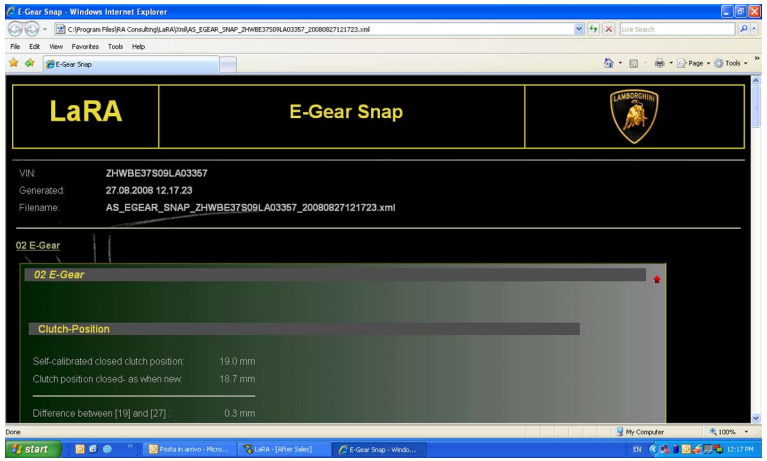

Fig.15

® Automobili Lamborghini S.p.A.
The information and procedures published below are strictly confidential and exclusively for the Lamborghini Dealer Network and Authorized Service Points. All copyrights are property of Automobili Lamborghini S.p.A based on copyright law. All of the PDF chapters in the WEB workshop manuals described below are based on information available at the time of publication. The company reserves the right to make updates and modifications. The following are prohibited: reprinting, reproduction, forwarding to unauthorized people and/or third parties, and translation, including partial, without written authorization from Automobili Lamborghini S.p.A.

ANALYSIS MODE

In analysis mode, the LaRa-AS program windows feature a series of permanently accessible icons and pull-down menus which mean the following (**Fig.16**):

A. control bar for quickly accessing the “Analysis Mode” functions.

B. Control unit list: Contains the list of all of the control units managed by this program (01 G.F.A. - 02 E-gear - XAirbag - 33 Scan-Tool OBDII).

C. Connection status: Signals proper communication between the PC and the control unit.

D. Main menu: Returns to the main screen.

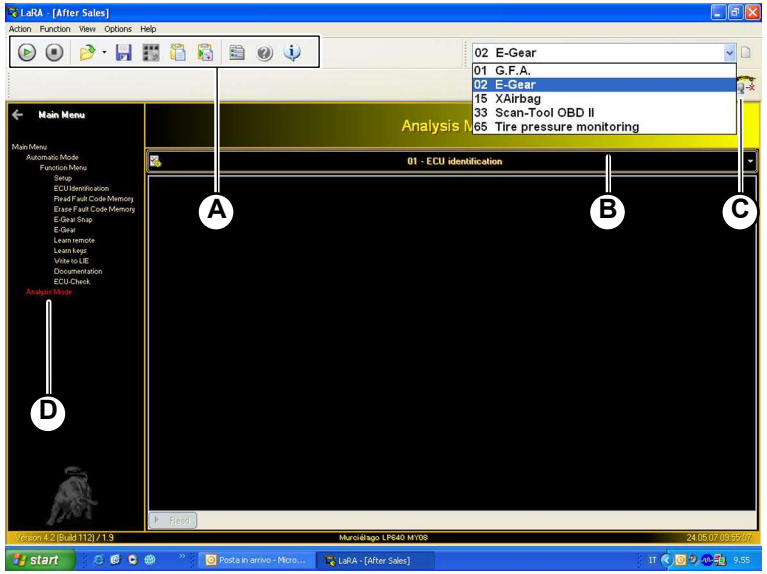

Fig.16

® Automobili Lamborghini S.p.A.
The information and procedures published below are strictly confidential and exclusively for the Lamborghini Dealer Network and Authorized Service Points. All copyrights are property of Automobili Lamborghini S.p.A based on copyright law. All of the PDF chapters in the WEB workshop manuals described below are based on information available at the time of publication. The company reserves the right to make updates and modifications. The following are prohibited: reprinting, reproduction, forwarding to unauthorized people and/or third parties, and translation, including partial, without written authorization from Automobili Lamborghini S.p.A.

Control bar icon:

START (A): after selecting the ECU and the function that must be checked, this green button starts communication.
(icon valid for all model versions).

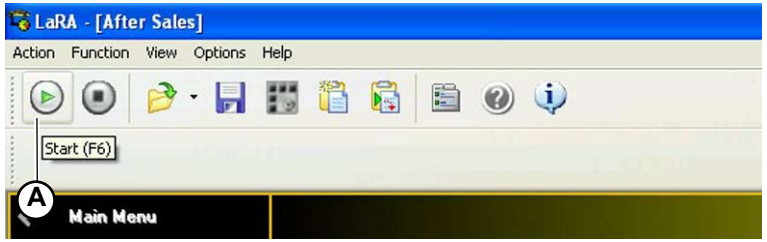

STOP (B): this button ends communication.
Alternatively, communication may be interrupted by removing the keys from the control panel.
(icon valid for all model versions).

Folder save Files (C): this button shows where the LaRa-AS system automatically saves the information:

- recording files: function inactive
- log files: folder for saving LaRa-AS files, rewritten after each operation (e.g.: clutch writing or reading); the created report file must be saved with another name because when the system is closed, or following a new operation, it is automatically rewritten, deleting previous information.
- Output Files: function inactive
- xlm Files: folder where the system saves report files in xlm.

(icon valid for all model versions).

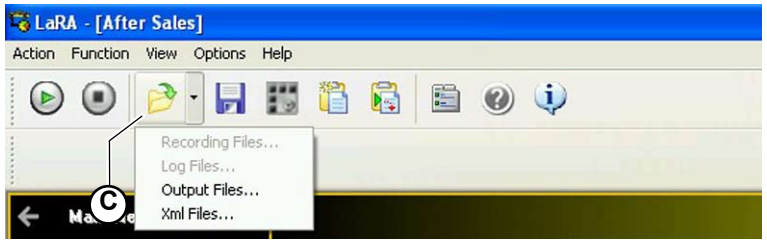

Save (D): inactive functions (not used by the system).
(icon not valid for all model versions).

Create measurement (E): inactive functions (not used by the system).
(icon not valid for all model versions).

Recording (F): inactive functions (not used by the system).
(icon not valid for all model versions).

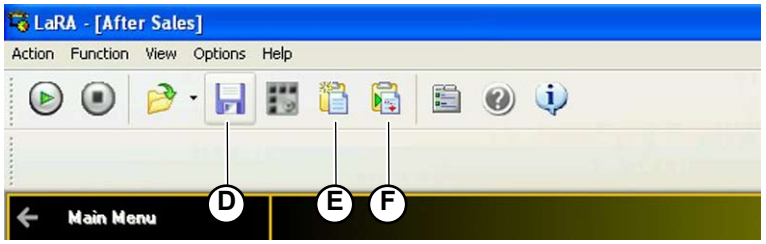

® Automobili Lamborghini S.p.A.
The information and procedures published below are strictly confidential and exclusively for the Lamborghini Dealer Network and Authorized Service Points. All copyrights are property of Automobili Lamborghini S.p.A based on copyright law. All of the PDF chapters in the WEB workshop manuals described below are based on information available at the time of publication. The company reserves the right to make updates and modifications. The following are prohibited: reprinting, reproduction, forwarding to unauthorized people and/or third parties, and translation, including partial, without written authorization from Automobili Lamborghini S.p.A.

Preferences (G): this button displays the type of interface to be used for communication.
Read only.
(icon valid for all model versions).

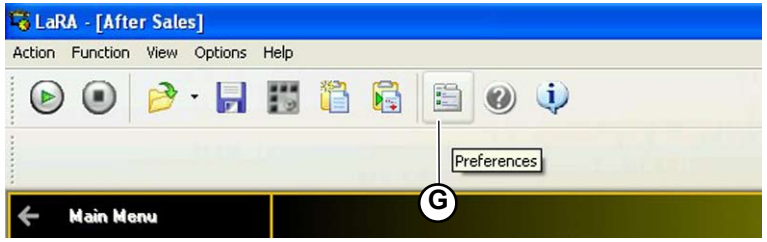

Diagnostic guide (H): this button accesses documents created for diagnosis and the system's other functions within LaRa-AS.
Example:
if an ECU presents error codes, press the "Diagnostic guide" icon to view the codes without interrupting communication: the system will open an Acrobat document showing the relative error codes. Select a code to open the relative document which explains the problem, possible remedies and the tests that must be carried out (diagnosis tree).
(icon valid for all model versions).

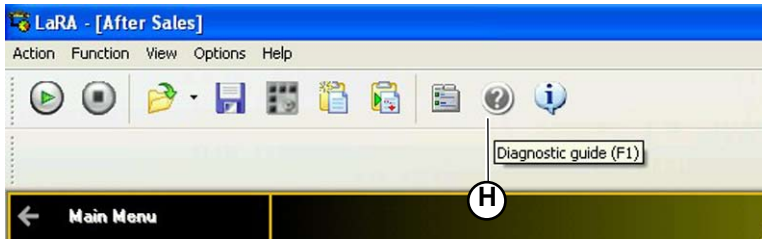

Information (I): this button provides read-only information, displaying the installed version of the LaRa-AS software and the owner of the license.
(icon valid for all model versions).

® Automobili Lamborghini S.p.A.
The information and procedures published below are strictly confidential and exclusively for the Lamborghini Dealer Network and Authorized Service Points. All copyrights are property of Automobili Lamborghini S.p.A based on copyright law. All of the PDF chapters in the WEB workshop manuals described below are based on information available at the time of publication. The company reserves the right to make updates and modifications. The following are prohibited: reprinting, reproduction, forwarding to unauthorized people and/or third parties, and translation, including partial, without written authorization from Automobili Lamborghini S.p.A.

01 G.F.A.

Permits “writing” the V.I.N. code in the G.F.A. control unit if the control unit has been replaced.
To carry out this type of operation after correctly connecting the **BASIC.XS** cable **(000200-48a)** and the cable for LARA-AS diagnostics interface **(000200-48b)**:

- Select the **01 G.F.A. control unit from the list of control units.**
- Select the **measurement file “writing VIN murcielago” (Fig.17)**
- Start the connection;
- Enter the vehicle code on the screen **(Fig.18).**

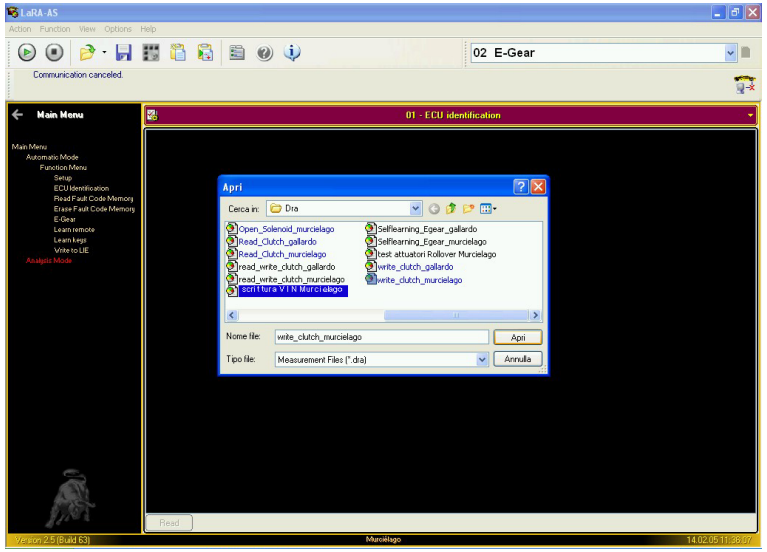

Fig.17

Notice

- **The vehicle code must be entered entirely in uppercase characters.**
- **After the VIN code has been typed in, check that it is correct several times. After confirming this code, it can no longer be modified.**

To check if the system has properly written the code, two procedures may be used:

1. Read the ECU-Identification using **Lara-AS**
2. Use **L-Das** and check the version (where the VIN code also appears)

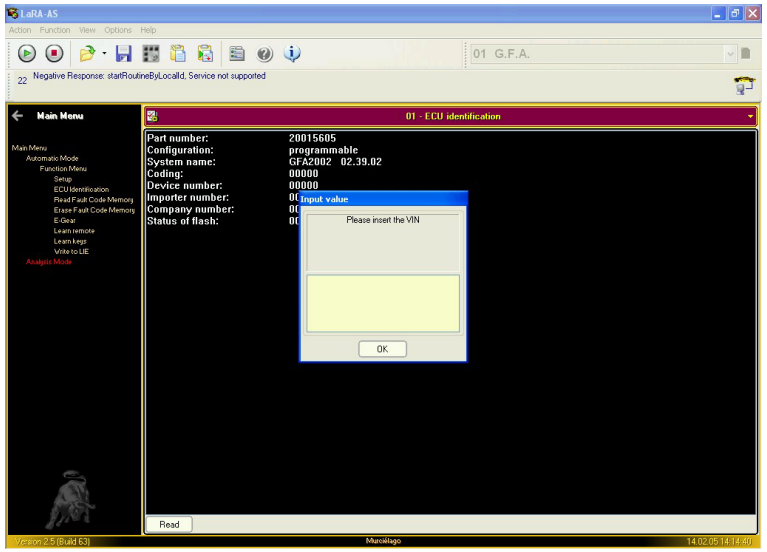

Fig.18

® Automobili Lamborghini S.p.A.
The information and procedures published below are strictly confidential and exclusively for the Lamborghini Dealer Network and Authorized Service Points. All copyrights are property of Automobili Lamborghini S.p.A based on copyright law. All of the PDF chapters in the WEB workshop manuals described below are based on information available at the time of publication. The company reserves the right to make updates and modifications. The following are prohibited: reprinting, reproduction, forwarding to unauthorized people and/or third parties, and translation, including partial, without written authorization from Automobili Lamborghini S.p.A.

02 E-Gear

To establish the connection between the control unit and the PC, use the **BASIC.XS** cable **(000200-48a)** and the cable for LARA-AS diagnostics interface **(000200-48b)**.
Permits communication with the E-Gear's control unit in order to:

- Read the type of control unit
- Delete the error codes in the system
- Check the type of automatic channel operations
- Insert software updates

The **measurement files** available in the E-Gear section are:
A) Bleeding Murcielago my09: Carries out a bleed cycle of the clutch of the automatic gearbox (permits opening/closing three times). If the oil is still emulsified after the cycle has finished, repeat the operation **(014206)**. The clutch's opening and closing must be controlled during each of the cycle's three phases.

Notice

- **Never bleed for more than 15 seconds, which could damage the clutch's pump.**

B) Egear_snap_Murcielago my09: Acquires all of the data stored in the gearbox control unit. After reading the initial data, the system displays a screen, press OK to continue, and at the same time stores this data in a file inside the system. The file is inside the folder ../preview/logfile with the name Lara-AS **(eg. Fig.19)**.

If the file needs to be stored in the memory it must be renamed (Save As...) because the system will overwrite the data in the Lara-As file when the program is restarted.

The most important channels are:

- Channel 9: indicates the engine's speed (rpm).
- Channel 10: indicates the PRIMARY SHAFT.
- Channel 19: Indicates the current position of the clutch, expressed in mm.
- Channel 20: Indicates the clutch's point of slippage; the default can be modified using a special Service Manager measurement file.
- Channel 25: Indicates the clutch slippage time (in seconds); overheating can be calculated based on this time (the higher the value, the greater the clutch wear).
- Channel 27: Indicates the initial position of the clutch, expressed in mm (new clutch).
- Channel 36: Indicates the degree of clutch deterioration; deterioration starts at 15,000 and goes to 20,000.

Notice

- **The difference between the value of channel 19 and channel 27 must never be more than 7.6mm.**
- **The clutch must be changed when the degree of deterioration is equal to 15,000.**

```
Read Data By Local Identifier [19]:
Self-calibrated closed clutch position : 25.94 mm
Raw data: [03 27]
==========================================================================
====
Read Data By Local Identifier [20]:
Self-calibrated Clutch Slip Position Start (PIS)Delta : 7.63 mm
Raw data: [00 D7]
==========================================================================
====
Read Data By Local Identifier [25]:
Clutch overheating time : 118 seconds
Raw data: [00 76]
==========================================================================
====
Read Data By Local Identifier [27]:
Clutch position closed- as when new : 17.71 mm
Raw data: [02 3F]
==========================================================================
====
Read Data By Local Identifier [28]:
Torque Driver : 0 %
Raw data: [00 00]
==========================================================================
====
Read Data By Local Identifier [29]:
Neutral Selection : 103.0 mA
Raw data: [02 03]
==========================================================================
====
Read Data By Local Identifier [30]:
Neutral Coupling : 489
Raw data: [01 E9]
==========================================================================
====
Read Data By Local Identifier [31]:
Oil temperature : 18.2 °C
Raw data: [00 B6]
==========================================================================
====
Read Data By Local Identifier [32]:
Oil Leakage with EV clutch energized : 65.4 ccm/minute
Raw data: [00 6D]
==========================================================================
====
Read Data By Local Identifier [33]:
Oil Leakage with EV not energized : 42.6 ccm/minute
Raw data: [00 47]
```

Fig.19

® Automobili Lamborghini S.p.A.
The information and procedures published below are strictly confidential and exclusively for the Lamborghini Dealer Network and Authorized Service Points. All copyrights are property of Automobili Lamborghini S.p.A based on copyright law. All of the PDF chapters in the WEB workshop manuals described below are based on information available at the time of publication. The company reserves the right to make updates and modifications. The following are prohibited: reprinting, reproduction, forwarding to unauthorized people and/or third parties, and translation, including partial, without written authorization from Automobili Lamborghini S.p.A.

C) Open_Solenoid_Murcielago my09: Opens all of the system's solenoid valves.

Notice

- **Before carrying out this operation, unscrew the three screws (by-pass) on the actuator a half turn. Repeat the operation as long as there is air in the system. Tighten when the operation has been completed.**

D) Selflearning_Egear_Murcielago: In the case of control unit replacement, reflash, or gearbox maintenance, carries out self-calibration to automatically detect the points of clutch insertion.

CAUTION!

Do not start the procedure if personnel are near the gearbox.

E) Read_Clutch_Murcielago my09: Reads the clutch; this is very important because it checks the clutch's wear. The program supplies three values: The current clutch value (channel 19), the initial value (channel 27), and the difference **(Fig.20)**.

Notice

- **When the current clutch value exceeds 7.6 mm, it is advisable to carry out a replacement.**

F) Write_Clutch_Murcielago: Permits entering the initial clutch value if the control unit is replaced (hexadecimal data read from channel 27). The entered data can be checked in the Lara-As file; if it is not correct, proceed with rewriting **(Fig.21)**. If the control unit proves to be seriously damaged and this data can no longer be retrieved from the old control unit, a default is entered with a tolerance of **+** o **- 1mm.**

Notice

- **Be very careful to report the correct value (hexadecimal); an incorrect value can cause serious damage to the clutch.**

G) Read_Write_Clutch_Murcielago my09: Reads the current position of the clutch if it has been replaced (channel 19) and writes it on channel 27 of the control unit (initial position) **(Fig.22)**.

Notice

- **If this parameter is not modified after the old worn clutch is replaced, the new clutch could be seriously damaged.**

```
Date:          14.02.05 11:40:46
==========================

-----------------------------------------------
  Measurement file:        C:\Programmi\RA Consulting\LaRA-AS\Dra\Read_Clutch_murciela-
go.dra
      Script file:         C:\Programmi\RA Consulting\LaRA-AS\Dra\Read_Clutch_murciela-
go.enc
-----------------------------------------------
Read Data By Local Identifier [19]:
25.94 mm
Raw data: [03 27]
==============================================================================
====
Read Data By Local Identifier [27] :
17.71 mm
Raw data: [02 3F]
```

Fig.20

Fig.21

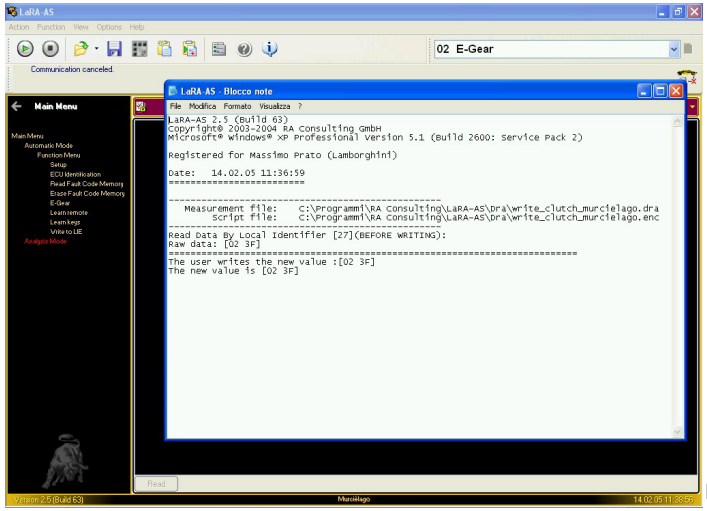

Fig.22

® Automobili Lamborghini S.p.A.
The information and procedures published below are strictly confidential and exclusively for the Lamborghini Dealer Network and Authorized Service Points. All copyrights are property of Automobili Lamborghini S.p.A based on copyright law. All of the PDF chapters in the WEB workshop manuals described below are based on information available at the time of publication. The company reserves the right to make updates and modifications. The following are prohibited: reprinting, reproduction, forwarding to unauthorized people and/or third parties, and translation, including partial, without written authorization from Automobili Lamborghini S.p.A.

H) E-Gear_Murcielago_PIS my09: procedure to optimise the PIS value on Murcielago LP640 E-Gear cars equipped with SW version LCD45MMB code 086927755A.

Conditions required to carry out the test:

- engine water temperature > 80°C
- engine oil temperature > 80°C

If the conditions are complied with, to determine the correct PIS setting, drive off a number of times with the accelerator pedal at > 80% (always allow a few minutes' break to allow the clutch to cool down). The engine speed must stabilise at a value between 2300 – 2700 rpm and there must not be any swings.

- If the achieved engine speed is below the reference value (2300 – 2700 rpm), proceed by setting a PIS value which is higher than the default value or anyway higher than the value set previously in the control unit and which can be checked with the diagnosis tool (LaRa) on channel 20 of the E-gear.

- If the achieved engine speed is above the reference value (2300 – 2700 rpm), proceed by setting a PIS value which is higher than the default value or anyway higher than the value set previously in the control unit and which can be checked with the diagnosis tool (LaRa) on channel 20 of the E-gear.

Increasing or decreasing the PIS value modifies the point at which the system attributes practically null transmissivity, therefore, by increasing this value the clutch has more "slippage", making clutch closure "smoother" and increasing the pickup speed; by decreasing this value, the clutch has less "slippage", making clutch closure "sharper" and decreasing the pickup speed.

After modifying the PIS value with the diagnosis tool, to make the modifications effective, switch off the control unit for at least 10 seconds, then start the engine and carry out a number of pickups (at least 5) using the accelerator pedal at < 50% to allow adjustment to the new self-calibration parameters inside the control unit (IDegrFriz).

® Automobili Lamborghini S.p.A.
The information and procedures published below are strictly confidential and exclusively for the Lamborghini Dealer Network and Authorized Service Points. All copyrights are property of Automobili Lamborghini S.p.A based on copyright law. All of the PDF chapters in the WEB workshop manuals described below are based on information available at the time of publication. The company reserves the right to make updates and modifications. The following are prohibited: reprinting, reproduction, forwarding to unauthorized people and/or third parties, and translation, including partial, without written authorization from Automobili Lamborghini S.p.A.

Considering the dispersion between the various clutches, it is not possible to foresee a correlation between the PIS variation and engine speed increase/decrease. Therefore it is advisable to proceed in small, 3-bit-maximum steps between one test and another.

Travel in Hexacimal format	Travel [bit]	Car Handling during take-off
C8	200	More Harsh Biting point at lower RPM
CB	203	
CE	206	
D1	209	
D4	212	
D7	**215**	**Default value**
DA	218	More Soft Biting point at higher RPM
DD	221	
E0	224	
E3	227	
E6	230	

Note
Software version: 086927755C

® Automobili Lamborghini S.p.A.
The information and procedures published below are strictly confidential and exclusively for the Lamborghini Dealer Network and Authorized Service Points. All copyrights are property of Automobili Lamborghini S.p.A based on copyright law. All of the PDF chapters in the WEB workshop manuals described below are based on information available at the time of publication. The company reserves the right to make updates and modifications. The following are prohibited: reprinting, reproduction, forwarding to unauthorized people and/or third parties, and translation, including partial, without written authorization from Automobili Lamborghini S.p.A.

33 Scan-Tool OBDII

International system for reading error parameters coming from the engine and relative reset.
These codes are divided into groups and can be selected using the select key **(Fig.23).**

To establish the connection between the control unit and the PC, use the following **BASIC.XS** cable **(000200-48a)** and the cable for LARA-AS diagnostics interface **(000200-48b)**.

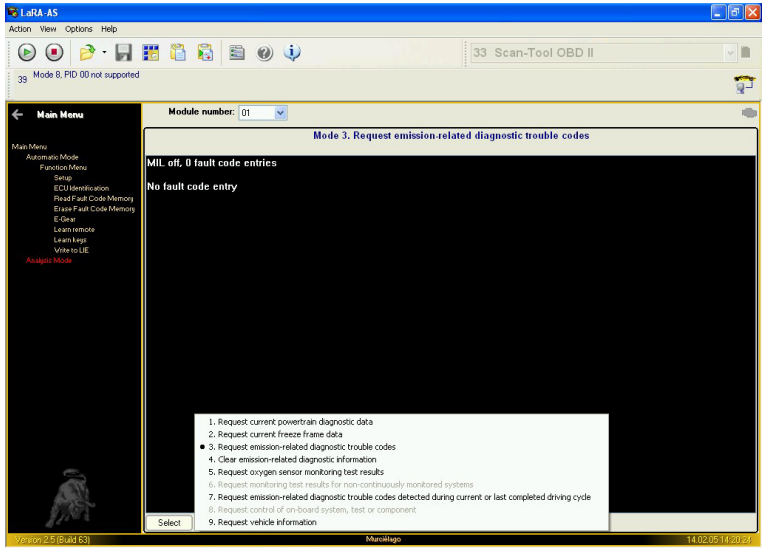

Fig.23

® Automobili Lamborghini S.p.A.
The information and procedures published below are strictly confidential and exclusively for the Lamborghini Dealer Network and Authorized Service Points. All copyrights are property of Automobili Lamborghini S.p.A based on copyright law. All of the PDF chapters in the WEB workshop manuals described below are based on information available at the time of publication. The company reserves the right to make updates and modifications. The following are prohibited: reprinting, reproduction, forwarding to unauthorized people and/or third parties, and translation, including partial, without written authorization from Automobili Lamborghini S.p.A.

00 AIR BAG

It allows to read and display the errors stored in the AIR BAG control unit.

To carry out this type of operation after correctly connecting the **BASIC.XS** cable **(000200-48a)** and the cable for LARA-AS diagnostics interface **(000200-48b)**:

- Select the **00 AIR BAG (Fig.24)** control unit from the list of control units
- Start the connection

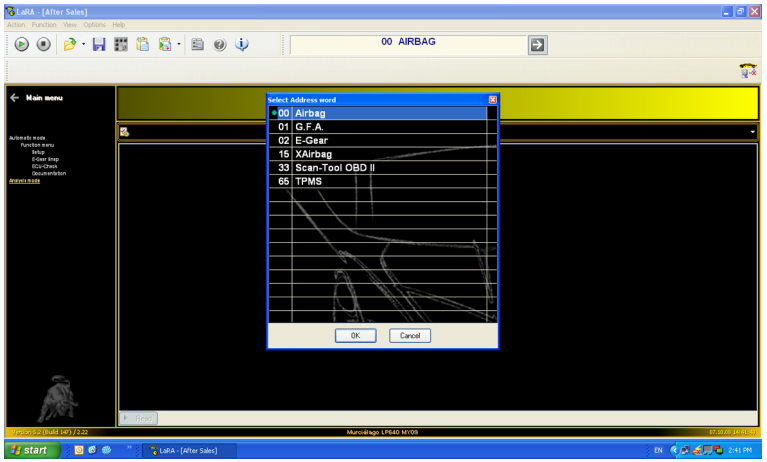

Fig.24

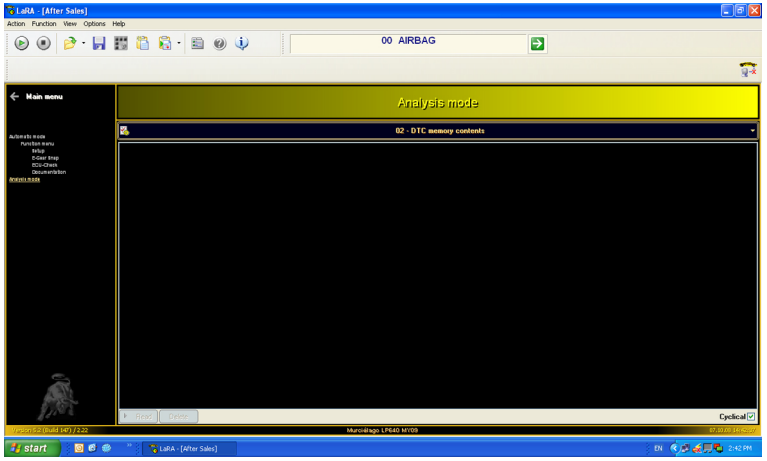

Fig.25

® Automobili Lamborghini S.p.A.
The information and procedures published below are strictly confidential and exclusively for the Lamborghini Dealer Network and Authorized Service Points. All copyrights are property of Automobili Lamborghini S.p.A based on copyright law. All of the PDF chapters in the WEB workshop manuals described below are based on information available at the time of publication. The company reserves the right to make updates and modifications. The following are prohibited: reprinting, reproduction, forwarding to unauthorized people and/or third parties, and translation, including partial, without written authorization from Automobili Lamborghini S.p.A.

LDAS32 DIAGNOSTIC SYSTEM

1. To access the system, select “System” from the **LDAS32 application** pull-down menu (**A-Fig.1**).

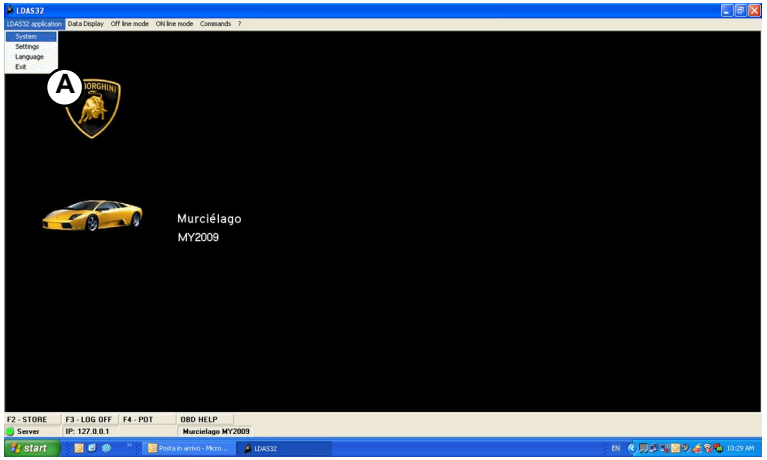

Fig.1

2. The model and manufacture year may be selected from the **System Selector** window (**Fig.2**):

Model	Manufacture year
Diablo	My 96-97 My 98-99
Diablo 6.0 - Gt	
Murciélago	My 02 My 04 My 05 My 06 My 07 My 08 My 09
Gallardo	My 04 My 05 My 06 My 07 My 08 My 09

Fig.2

After selecting the vehicle (and manufacture year), click **OK**.
The system starts automatically.

If the system is not programmed correctly, incorrect or unidentified OBD II error codes could occur. Therefore, set the correct MY (Fig.2) before starting diagnosis.

The system recognizes the car model automatically but not the manufacture year: Make sure it is entered correctly!

® Automobili Lamborghini S.p.A.
The information and procedures published below are strictly confidential and exclusively for the Lamborghini Dealer Network and Authorized Service Points. All copyrights are property of Automobili Lamborghini S.p.A based on copyright law. All of the PDF chapters in the WEB workshop manuals described below are based on information available at the time of publication. The company reserves the right to make updates and modifications. The following are prohibited: reprinting, reproduction, forwarding to unauthorized people and/or third parties, and translation, including partial, without written authorization from Automobili Lamborghini S.p.A.

Data display

The **Data Display** screen (**B-Fig.3**) provides access to all of the software's new possibilities; the pull-down menu contains the following adjustments:

ACCELERATOR PEDAL MURCIELAGOMY04-09: for setting the accelerator pedal
BASELP640_MY09: for viewing the car's basic parameters
CHECKLISTN_LP640MY09: for viewing all of the car's special parameters in detail
COMUNICAZIONE PMC-TCS: for viewing the PMC ECU's parameters
LIFTING_DIAG_V2: for lifting system diagnosis
MAP STRIP: for displaying the air intake manifold pressure parameters
MISFIRE STATUS: for viewing possible system misfires

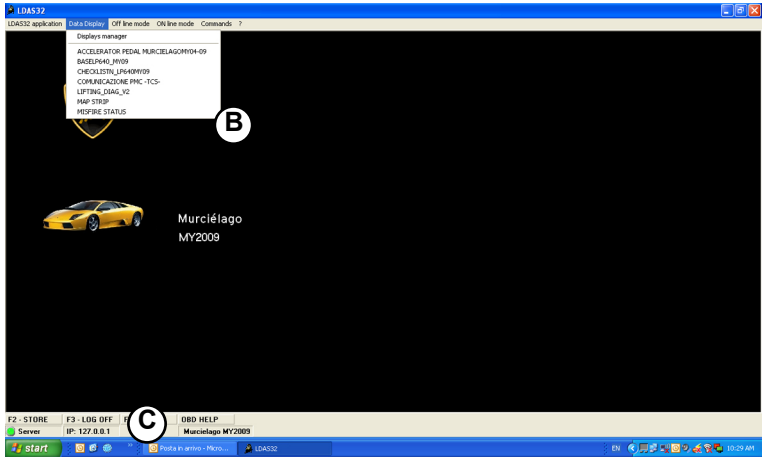

Fig.3

Notes on proper interpretation of the contained data are supplied for each of these.

The window (C-Fig.3) shows whether the model and year settings are correct, after directly verifying the car's VIN.

® Automobili Lamborghini S.p.A.
The information and procedures published below are strictly confidential and exclusively for the Lamborghini Dealer Network and Authorized Service Points. All copyrights are property of Automobili Lamborghini S.p.A based on copyright law. All of the PDF chapters in the WEB workshop manuals described below are based on information available at the time of publication. The company reserves the right to make updates and modifications. The following are prohibited: reprinting, reproduction, forwarding to unauthorized people and/or third parties, and translation, including partial, without written authorization from Automobili Lamborghini S.p.A.

The **BASELP640_MY09** screen (**Fig.4**) shows the system's essential parameters.

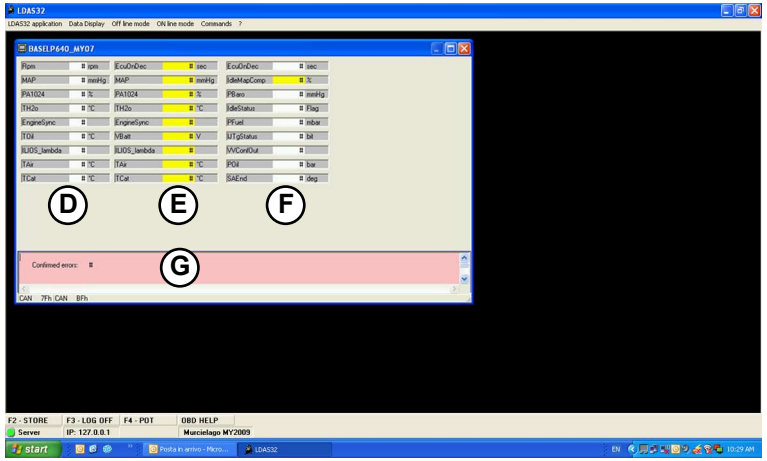

Fig.4

The values shown in the first column (D-Fig.4) refer to cylinder bank 1, whereas the values reported in the second column (E-Fig.4) refer to cylinder bank 2:

Rpm	Engine speed
MAP	Air intake manifold pressure
PA1024	Accelerator pedal opening percentage
TH2o	Water temperature
EngineSync	1 indicates synchronism OK (the system is correctly synchronized); if it is not synchronized, the value is 0 (by synchronism we mean the correct correlation between the flywheel signals (smot) and the camshaft signals (s cam); if everything is OK, synchronism is equal to 1, if a correlation is missing or a signal is lost, the sync goes to 0)
TOil	Oil temperature
ILIOS_lambda	Mixture strength at which the engine runs Linear oxygen sensors are used. Based on the system's target (rpm/engine load), it sets the correct stoichiometrical ratio and consequently adjusts the injection system.
TAir	Air temperature
TCat	Catalytic converter temperature

The third column (F-Fig.4) shows the values common to both cylinder banks:

EcuOnDec	Control unit start time
IdleMapComp	Automatic MAP compensation (the system signals an error for variations above 4.5%)
PBaro	Barometric pressure: Indicates the current altitude, which affects the injection time.
IdleStatus	Parameter that indicates the vehicle's current condition (idle speed)
PFuel	Fuel pressure (reading with negative values)
IJTgStatus	Lamborghini parameter
WConfOut	Lamborghini parameter
POil	Oil pressure
SAEnd	Engine spark advance

The window (G-Fig.4) shows any errors found in the system's basic parameters.

® Automobili Lamborghini S.p.A.
The information and procedures published below are strictly confidential and exclusively for the Lamborghini Dealer Network and Authorized Service Points. All copyrights are property of Automobili Lamborghini S.p.A based on copyright law. All of the PDF chapters in the WEB workshop manuals described below are based on information available at the time of publication. The company reserves the right to make updates and modifications. The following are prohibited: reprinting, reproduction, forwarding to unauthorized people and/or third parties, and translation, including partial, without written authorization from Automobili Lamborghini S.p.A.

The **CHECKLISTN_LP640_MY09** screen (**Fig.5**) shows all of the operation parameters for the system's various functions for controlling the engine:

Rpm: Engine speed

EcuOnDec: ECU operation time starting when the key is turned to ON (cylinder bank 1)

EcuOnDec: ECU operation time starting when the key is turned to ON (cylinder bank 2)

AvvMSec: Engine cranking time

CrankPhase: Fuel enrichment during cranking meter (goes from 0 to 255 and stops)

KTJCk1PhsTH2o: Fuel enrichment meter percentage during phase 1 according to water temperature

TJEnd: Final engine injection time, cylinder banks 1 and 2

VBatt: Battery voltage (must be between 11 and 15 Volts)

Purge solenoid management (the value of these parameters must not vary more than 2.5%)

PGRequest: Purge solenoid opening percentage requested by system

Purge_ActualDuty: Purge solenoid opening percentage based on the system's request (maximum 99%)

Purge_Tp: Estimated fuel density in the air arriving from the purge solenoid; the higher the value, the more fuel arrives from the canister. Maximum acceptable value: 0.065 (beyond this value the canister is considered full and there is probably an engine malfunction)

Purge_QBCPurge: Estimated fuel vapor mass arriving from purge solenoid toward engine

Pfuel: Fuel pressure inside tank (must be negative)

SAEnd: Final spark advance, cylinder bank 1 and 2

Engine system

EngineSync: 1 indicates synchronism OK (the system is correctly synchronized); if it is not synchronized, the value is 0 (by synchronism we mean the correct correlation between the flywheel signals (smot) and the camshaft signals (s cam); if everything is OK, synchronism is equal to 1, if a correlation is missing or a signal is lost, the sync goes to 0)

VVConfOut: Determines the types of accessories activated at that moment, e.g. VVT, ECS, etc. (*)

Map: Intake manifold pressure

PBaro: Barometric pressure (GFA altitude pressure)

Tair: Air temperature in intake manifold

IdleMapComp: Automatic MAP compensation (the system signals an error for variations above 4.5%)

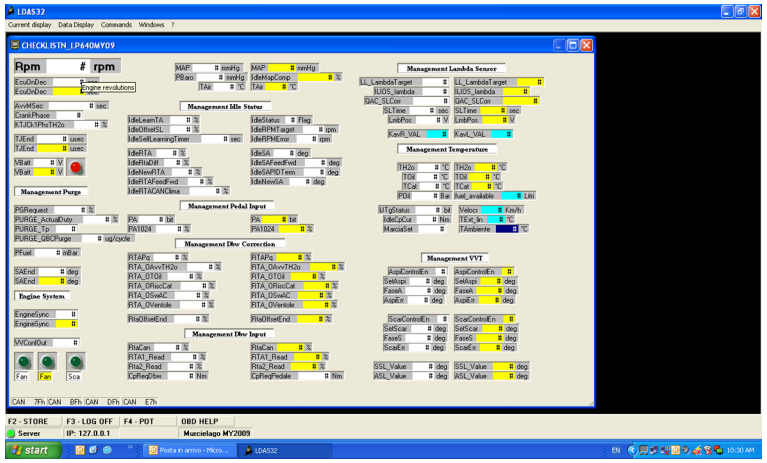

Fig.5

® Automobili Lamborghini S.p.A.
The information and procedures published below are strictly confidential and exclusively for the Lamborghini Dealer Network and Authorized Service Points. All copyrights are property of Automobili Lamborghini S.p.A based on copyright law. All of the PDF chapters in the WEB workshop manuals described below are based on information available at the time of publication. The company reserves the right to make updates and modifications. The following are prohibited: reprinting, reproduction, forwarding to unauthorized people and/or third parties, and translation, including partial, without written authorization from Automobili Lamborghini S.p.A.

Idle Status Management

IdeLearnTA and IdeOffSetSL: Two idle speed throttle opening percentages (self-learning of idle speed) that change according to the idle speed every 3 seconds.

IdleSelfLearningTimer: When the engine is at idle speed, the counter goes from 0 to 3 seconds, adjusting the IdeLearnTA and IdeOffSet to maintain the target speed and rpm, properly setting the throttle. Ends when self-learning has finished, when the SLTime's 60 seconds are up.

IdleStatus: When the engine is at idle speed, this counter starts at 4.

IdleRPMTarget: Target RTM requested by the system (rpm)

Idle RPMError: During status 4 (idle) this error must not exceed 100 rpm with respect to the target.

IdleRTA: Current throttle opening percentage at idle speed

IdleRTADiff: Lamborghini parameter

IdleNewRTA: New throttle opening percentage required by the system when self-learning ends at idle speed

IdleRTAFeedFwd: Lamborghini parameter

IdleRTACANClima: Opening offset at idle speed for A/C

IdleSA: Current spark advance at idle speed

IdleSAFeedFwd: Lamborghini parameter

IdleSAPIDTerm: Lamborghini parameter

IdleNewSA: New spark advance required by the system when self-learning ends at idle speed

Pedal Input Management

PA: Accelerator pedal signal input in bits

PA1024: Accelerator pedal opening percentage in degrees

DBW Correction Management

RTAPq: Opening percentage required as to accelerator pedal

RTA_0AvvTH2o: Enrichment for H2o temp during cranking

RTA_0TOil: Enrichment for oil temp during cranking

RTA_0RiscCat: Enrichment for warming up catalytic converters during cranking

RTA_0SwAC: Enrichment for activating A/C system

RTA_0Ventole: Enrichment for activating radiator fans

RTA_OffsetEnd: Total requested enrichment

® Automobili Lamborghini S.p.A.
The information and procedures published below are strictly confidential and exclusively for the Lamborghini Dealer Network and Authorized Service Points. All copyrights are property of Automobili Lamborghini S.p.A based on copyright law. All of the PDF chapters in the WEB workshop manuals described below are based on information available at the time of publication. The company reserves the right to make updates and modifications. The following are prohibited: reprinting, reproduction, forwarding to unauthorized people and/or third parties, and translation, including partial, without written authorization from Automobili Lamborghini S.p.A.

DBW Input Management

Rta Can: Requested throttle opening percentage

Rta1_Read: DBW 1 throttle position read and implemented

Rta2_Read: DBW 2 throttle position read and implemented

CpReqDbw: Torque requested for DBW from engine table

CpRequestPedale: Torque requested by pedal position for engine control system

Oxygen Sensor Management

LL_Lambda Target: Linear oxygen sensor; oxygen sensor target requested by the system

ILIOS_lambda: Mixture strength at which the engine runs; the closer it is to 1, the more stoichiometric it is (above 1 the system indicates a weak mixture, below 1 it indicates a rich mixture)

QAC_SLCorr: KTJ of the linear oxygen sensors; the higher the value, the more air enters the engine

SLTime: Self-learning time (0-60 sec). For setting the air flow rate (DBW setting) at idle speed, only once per trip and only when the correct temperature conditions exist (TH2o>85° Toil>90°); if this is not possible, the system uses the last opening and compensates by changing the engine's spark advance.

LmdPos: Post-catalytic converter oxygen sensor signal (determines correct operation)

KavR_VAL: Value of misfiring sensors; this value must fall within the correct parameters (minimum = 80 bit, maximum = 145 bit), beyond which a malfunction is determined (disconnected pipe, clogged pipe, disconnected connector, etc.)

Temperature Management

TH2o: Water temperature

Toil: Oil temperature

Tcat: Catalytic converter temperature

Poil: Engine oil pressure

IdleCpCur: Lamborghini parameter

IJTgStatus: Lamborghini parameter

Marcia Set: Indicates which gear the car is in

TExt_lin: Outside temperature (°C) read by the GFA

Velocr: Speed read by GFA ECU

TAmbiente: Ambient temperature (for opening the two rear air intakes) read by the PMC

® Automobili Lamborghini S.p.A.
The information and procedures published below are strictly confidential and exclusively for the Lamborghini Dealer Network and Authorized Service Points. All copyrights are property of Automobili Lamborghini S.p.A based on copyright law. All of the PDF chapters in the WEB workshop manuals described below are based on information available at the time of publication. The company reserves the right to make updates and modifications. The following are prohibited: reprinting, reproduction, forwarding to unauthorized people and/or third parties, and translation, including partial, without written authorization from Automobili Lamborghini S.p.A.

VVT Management
AspContEn: Intake variable valve timing (1 = on, 0 = off). The system only indicates that the solenoid valve is on and not its operation. It therefore does not indicate if the solenoid valve is defective.
SetAsp: Position in degrees of intake variable valve timing mechanisms requested by tables
FaseA: Implemented position of intake variable valve timing mechanisms
AspErr: Implemented position error compared to requested (must always be less than 3°)
ScarControlEn: Exhaust variable valve timing mechanisms (1 = on, 0 = off)
SetScar: Requested exhaust VVT position
FaseS: Exhaust VVT implemented position
ScarErr: Implemented position error compared to requested (must always be less than 3°)
SSL_Value and ASL_Value: self-learning values during cranking regarding the positioning of the exhaust and intake VVT; the malfunction light comes on for values higher than ±10°; this indicates incorrect engine timing.

VVT operating strategy

The VVT have two variables:
- Water temperature (**tH_2O**)
- Engine speed (**Rpm**)

tH_2O < 65°C	Activation (the value of the parameter in the “Check list LP640” window regarding “AspicontrolEn /ScarcontrolEN”) remains at zero.
tH_2O < 65°C & Rpm > 1200	Activation goes from 0 to 1 but maintains a basic setting required by the system.
tH_2O > 65°C & Rpm > 1200	The VVT will be changed to optimize the torque required by the system under every condition.

® Automobili Lamborghini S.p.A.
The information and procedures published below are strictly confidential and exclusively for the Lamborghini Dealer Network and Authorized Service Points. All copyrights are property of Automobili Lamborghini S.p.A based on copyright law. All of the PDF chapters in the WEB workshop manuals described below are based on information available at the time of publication. The company reserves the right to make updates and modifications. The following are prohibited: reprinting, reproduction, forwarding to unauthorized people and/or third parties, and translation, including partial, without written authorization from Automobili Lamborghini S.p.A.

The **PMC (Power Motor Control) - TCS (Traction Control System)** Communication screen (**Fig.6**) displays the parameters necessary for assessing proper operation of the air intakes and the TCS.

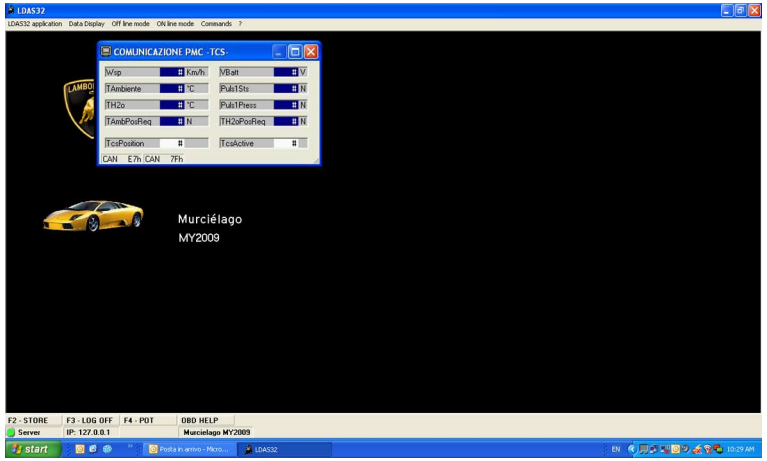

Fig.6

Parameter list	
W/sp	Speed received from GFA
Tamb	Ambient temperature from GFA (temperature above 38°C automatically opens the air intakes)
TH2O	Water temperature
TambPosReg	Air intake position requested for Tamb
TCS position	Selector position
Vbatt	Battery voltage
Pusl1Sts	Manual movement push-button status
Puls1Press	Manual movement push-button pressed
TH2OposReq	Air intake position requested for TH2O
TCSPosition	Selector position
TCSActive	TCS: 1 = on, 0 = off

® Automobili Lamborghini S.p.A.
The information and procedures published below are strictly confidential and exclusively for the Lamborghini Dealer Network and Authorized Service Points. All copyrights are property of Automobili Lamborghini S.p.A based on copyright law. All of the PDF chapters in the WEB workshop manuals described below are based on information available at the time of publication. The company reserves the right to make updates and modifications. The following are prohibited: reprinting, reproduction, forwarding to unauthorized people and/or third parties, and translation, including partial, without written authorization from Automobili Lamborghini S.p.A.

The **Lifting Diag** screen (**Fig.7**) displays the parameters related to the lifting system.

Parameter list	
1.	Vehicle speed
2.	Lamborghini parameter
3.	Pressure read by the GFA through the sensor mounted on the hydraulic control unit
4.	User button for lifting/lowering the vehicle (value changes according to pressure applied to button)
5.	Lifting warning light (coincides with the one on the dashboard)
6.	Vehicle lifting/lowering solenoid valve control (the numerical value indicates current absorption; if always zero, solenoid valve probably faulty)
7.	Turns on if target is reached (UP or DOWN).
8.	**Down position upper limit pressure diagnosis** **(pressure discharged too often, valves probably jammed)**
9.	Down position lower limit pressure diagnosis (pressure restored too often, probable circuit leak or jammed valve)
10.	UP position lower limit pressure diagnosis (pressure restored too often, probable circuit leak or jammed valve)
11.	Target timeout diagnosis (the UP or DOWN position pressure was not reached within the expected time)
12.	Speed signal diagnosis (inconsistency between the speed read by the GFA sensor and the speed sent by the LIE)
13.	Pressure sensor electrical diagnosis (sensor disconnected -HI- or shorted to ground -LO-)
14.	UP absorption electrical diagnosis (the solenoid valve that controls lifting absorbs too much current -HI- or too little -LO-)
15.	DOWN absorption electrical diagnosis (the solenoid valve that controls lowering absorbs too much current -HI- or too little -LO-)
16.	DOWN valve consistency diagnosis (activation of the solenoid valve for lowering caused an increase in pressure)
17.	UP valve consistency diagnosis (activation of the solenoid valve for lifting caused a drop in pressure)

Fig.7

If an error occurs, the corresponding counter is set at maximum and with each trip is decreased one unit (if the error does not repeat). The counter with the highest value corresponds to the last error that occurred. The diagnosis counters are reset when LDAS diagnosis is reset.

® Automobili Lamborghini S.p.A.
The information and procedures published below are strictly confidential and exclusively for the Lamborghini Dealer Network and Authorized Service Points. All copyrights are property of Automobili Lamborghini S.p.A based on copyright law. All of the PDF chapters in the WEB workshop manuals described below are based on information available at the time of publication. The company reserves the right to make updates and modifications. The following are prohibited: reprinting, reproduction, forwarding to unauthorized people and/or third parties, and translation, including partial, without written authorization from Automobili Lamborghini S.p.A.

The **MAP Strip screen** (**Fig.8**) shows the real-time absolute pressure flow inside the intake manifolds.

With maximum compensation carried out by the system, the pressure flow must not exceed a 4.5% variation between cylinder bank 1 and 2; otherwise the system signals an error.

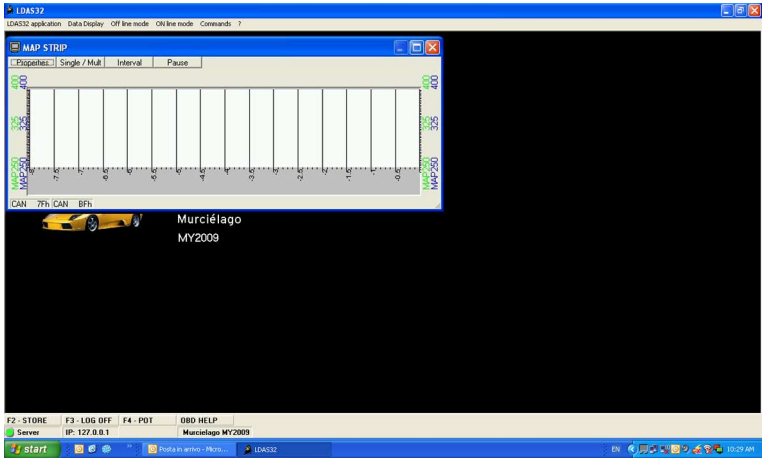

Fig.8

® Automobili Lamborghini S.p.A.
The information and procedures published below are strictly confidential and exclusively for the Lamborghini Dealer Network and Authorized Service Points. All copyrights are property of Automobili Lamborghini S.p.A based on copyright law. All of the PDF chapters in the WEB workshop manuals described below are based on information available at the time of publication. The company reserves the right to make updates and modifications. The following are prohibited: reprinting, reproduction, forwarding to unauthorized people and/or third parties, and translation, including partial, without written authorization from Automobili Lamborghini S.p.A.

The **Misfire Status screen** (**Fig.9**) contains the following parameters:

KavR_VAL - KavL_VAL (A-Fig.9)
Analog value expressed in bits of the misfiring sensors, cylinder bank 1 and 2.
The sensor is correct if the value remains within 85 ÷ 145 (key on ON and engine OFF); if it is lower or higher, it indicates a sensor error.

soglia_misfire - SommaModuli_B - SommaModuli_A (B-Fig.9)
If the SommaModuli_A - SommaModuli_B value is higher than the soglia_misfire value, misfiring is occurring.

misfire_generale (C-Fig.9)
Flag that identifies general misfiring 0 (no misfiring = one cylinder) 1 (misfire = several cylinders).

misfire_undet_counter_A - misfire_undet_counter_B (D-Fig.9)
General misfiring counter of cylinders in banks 1 and 2
Temperatura acqua uguale a 90 e valore del contatore maggiore di 50: determina il misfire generico;
Temperatura acqua minore/uguale a 90 e valore del contatore maggiore di 90: determina il misfire generico.

cilindro_misfire_A - cilindro_misfire_B (E-Fig.9)
Cylinder that caused misfiring

cilindro_misfire_ist_A - cilindro_misfire_ist_B (F-Fig.9)
Instant determination of misfiring cylinder which remains instantaneous

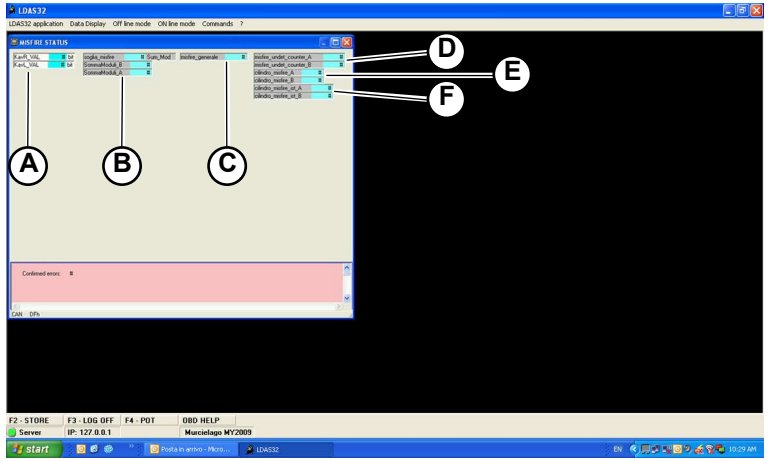

Fig.9

The **MY04-09 Accelerator Pedal Adjustment** screen (**Fig.10**) displays all the parameters necessary to correctly adjust the accelerator pedal. The screen has two separate sections: The one at the top refers to the minimum position and the one at the bottom refers to the maximum position.
All the parameters in the mask must fall within the recommended ranges: The relative green LED will come on. If a function is outside the range the red LED stays on.

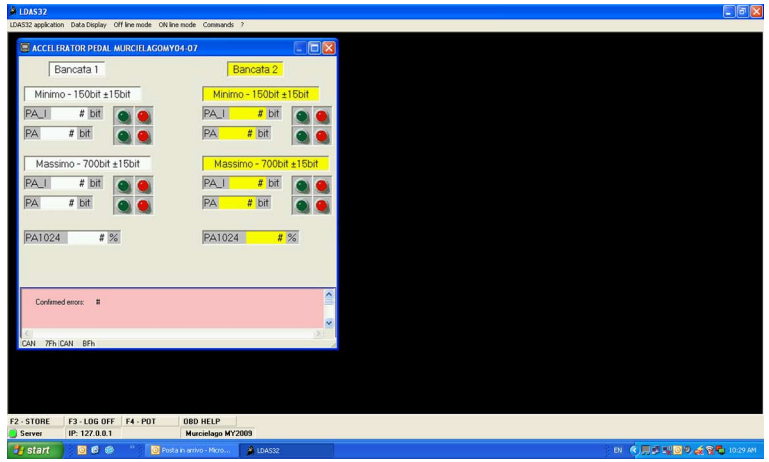

Fig.10

Parameter list		
PA_I	Accelerator pedal position- Analog input Minimum: 150 bit ± 15 bit	Maximum: 700 bit ± 15 bit
PA	Accelerator pedal position Minimum: 50 bit ± 15 bit	Maximum: 700 bit ± 15 bit
PA1024	Accelerator pedal position percentage Minimum: between 0 and 0.4%	Maximum: between 99.2 and 100%

(The tolerance is ± 15 bits)

® Automobili Lamborghini S.p.A.
The information and procedures published below are strictly confidential and exclusively for the Lamborghini Dealer Network and Authorized Service Points. All copyrights are property of Automobili Lamborghini S.p.A based on copyright law. All of the PDF chapters in the WEB workshop manuals described below are based on information available at the time of publication. The company reserves the right to make updates and modifications. The following are prohibited: reprinting, reproduction, forwarding to unauthorized people and/or third parties, and translation, including partial, without written authorization from Automobili Lamborghini S.p.A.

Off line mode

This item on the horizontal menu displays the engine operation data previously saved to a file through ON line mode – Save to Binary file (see later).

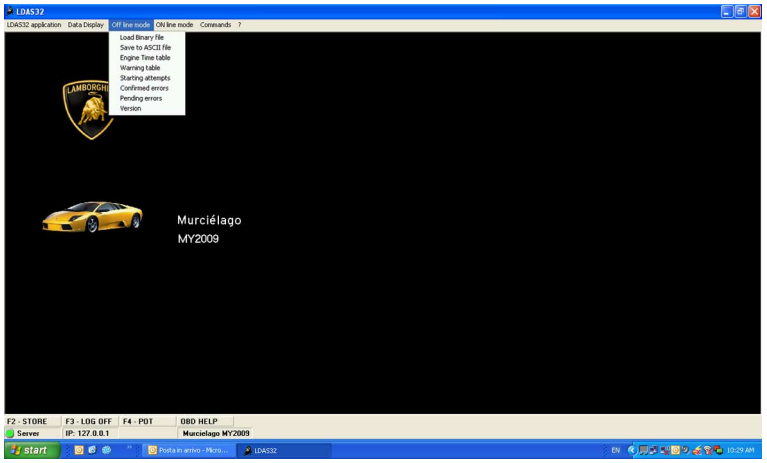

Fig.11

The pull-down menu of **Off line mode** includes the functions shown in the figure (**Fig.11**):

Functions
Load Binary file
Save to ASCII file
Engine Time table
Warning table
Starting attempts
Confirmed errors
Pending errors
GFA datalogger
Version

The **Load Binary File** function is always active: The other functions become active when the binary file has finished loading (shown by a special window).

For details on the other functions, see “**On line mode**” menu.

® Automobili Lamborghini S.p.A.
The information and procedures published below are strictly confidential and exclusively for the Lamborghini Dealer Network and Authorized Service Points. All copyrights are property of Automobili Lamborghini S.p.A based on copyright law. All of the PDF chapters in the WEB workshop manuals described below are based on information available at the time of publication. The company reserves the right to make updates and modifications. The following are prohibited: reprinting, reproduction, forwarding to unauthorized people and/or third parties, and translation, including partial, without written authorization from Automobili Lamborghini S.p.A.

ON line mode

The pull-down menu holds all the engine data (operation times and errors). Notes for each pull-down menu screen are supplied for properly interpreting its data.

The **ON line mode** pull-down menu includes the functions shown in the figure (**Fig.12**):

Functions
Save to Binary file
Save to ASCII file
Engine Time table
Warning table
Starting attempts
Confirmed errors
Pending errors
GFA datalogger
Version

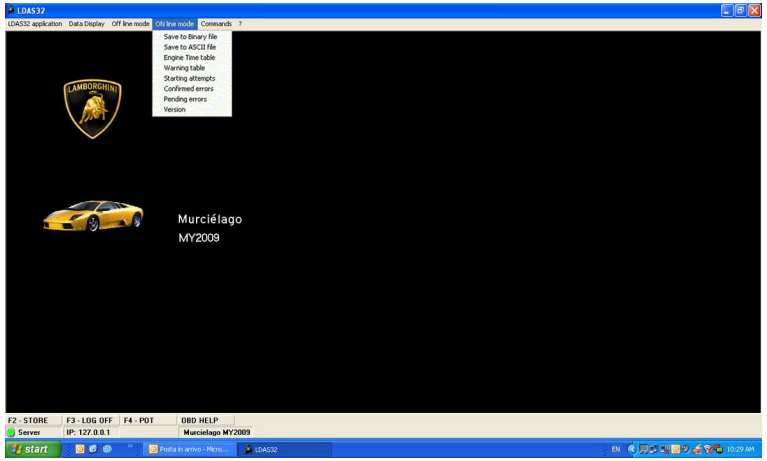

Fig.12

® Automobili Lamborghini S.p.A.
The information and procedures published below are strictly confidential and exclusively for the Lamborghini Dealer Network and Authorized Service Points. All copyrights are property of Automobili Lamborghini S.p.A based on copyright law. All of the PDF chapters in the WEB workshop manuals described below are based on information available at the time of publication. The company reserves the right to make updates and modifications. The following are prohibited: reprinting, reproduction, forwarding to unauthorized people and/or third parties, and translation, including partial, without written authorization from Automobili Lamborghini S.p.A.

Save to Binary file

The screen (**Fig.13**) allows data acquired from the control unit to be saved in a .lie file and stored for subsequent display and analysis.
During saving, after certain connection checks, the program requests a file name so that it may be stored in the LDAS32 system's DEVICE folder.

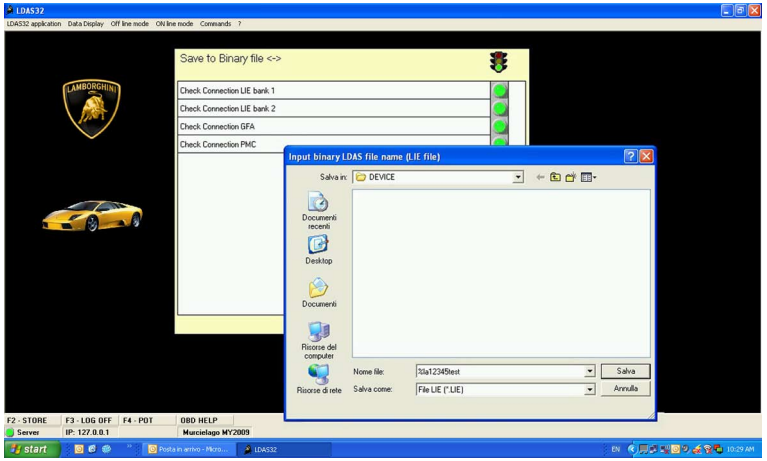

Fig.13

After entering the file name, the data is actually saved.
When this is done a screen appears which summarizes the saved data in logical groups.
The LED next to the various groups indicates that saving was successful (green) or that it failed (red) (**Fig.14**).

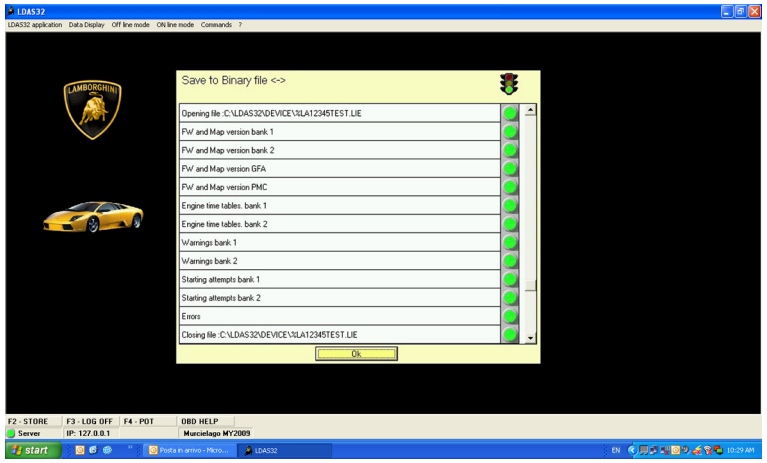

Fig.14

® Automobili Lamborghini S.p.A.
The information and procedures published below are strictly confidential and exclusively for the Lamborghini Dealer Network and Authorized Service Points. All copyrights are property of Automobili Lamborghini S.p.A based on copyright law. All of the PDF chapters in the WEB workshop manuals described below are based on information available at the time of publication. The company reserves the right to make updates and modifications. The following are prohibited: reprinting, reproduction, forwarding to unauthorized people and/or third parties, and translation, including partial, without written authorization from Automobili Lamborghini S.p.A.

Save to ASCII file

The screen (**Fig.15**) allows data acquired from the control unit to be saved in an .acq file (ASCII format) and stored for subsequent display and analysis.
This data can be viewed using any “NotePad” program and appears as shown in the figure (**Fig.15**).

During saving, after certain connection checks, the program requests a file name so that it may be saved.

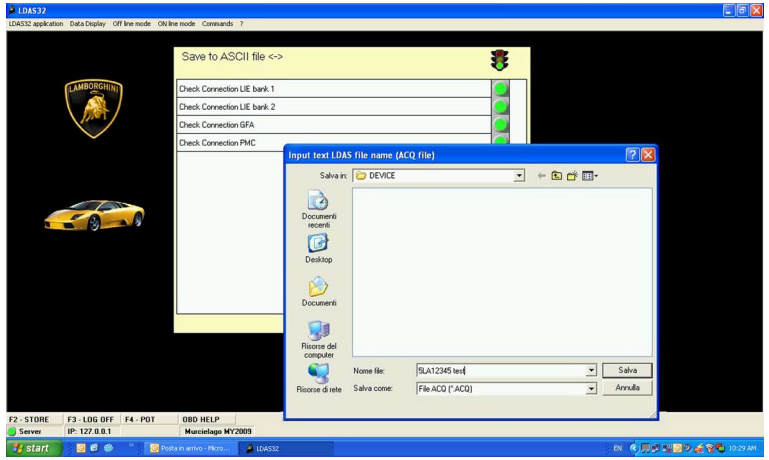

Fig.15

After entering the file name, the data is actually saved.
When this is done a screen appears which summarizes the saved data in logical groups. The LED next to the various groups indicates that saving was successful (green) or that it failed (red) (**Fig.16**).

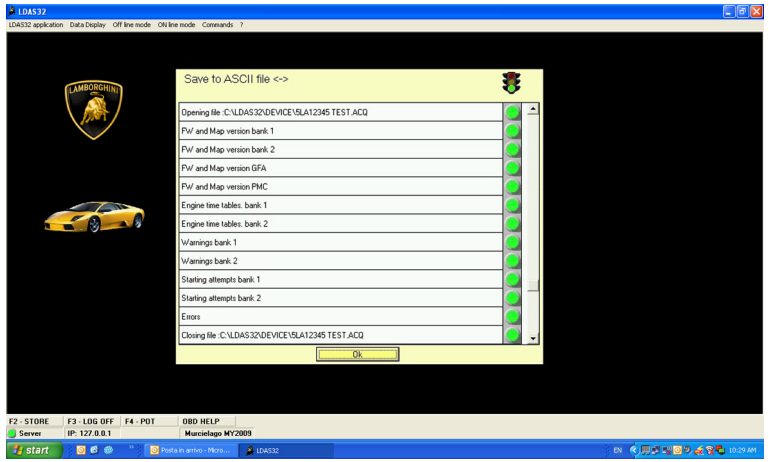

Fig.16

® Automobili Lamborghini S.p.A.
The information and procedures published below are strictly confidential and exclusively for the Lamborghini Dealer Network and Authorized Service Points. All copyrights are property of Automobili Lamborghini S.p.A based on copyright law. All of the PDF chapters in the WEB workshop manuals described below are based on information available at the time of publication. The company reserves the right to make updates and modifications. The following are prohibited: reprinting, reproduction, forwarding to unauthorized people and/or third parties, and translation, including partial, without written authorization from Automobili Lamborghini S.p.A.

Engine Time table

This screen (**Fig.17**) displays the vehicle's use according to the throttle's opening percentage and the rpm. Click on the relevant line to obtain the engine's total operation time at the given throttle opening percentage.

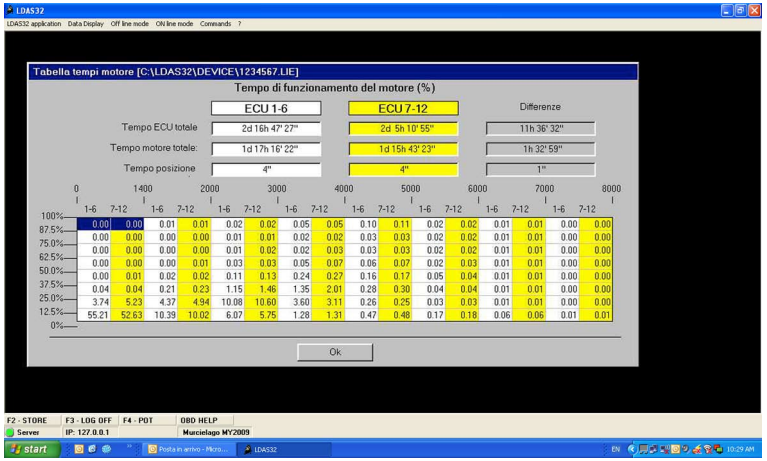

Fig.17

® Automobili Lamborghini S.p.A.
The information and procedures published below are strictly confidential and exclusively for the Lamborghini Dealer Network and Authorized Service Points. All copyrights are property of Automobili Lamborghini S.p.A based on copyright law. All of the PDF chapters in the WEB workshop manuals described below are based on information available at the time of publication. The company reserves the right to make updates and modifications. The following are prohibited: reprinting, reproduction, forwarding to unauthorized people and/or third parties, and translation, including partial, without written authorization from Automobili Lamborghini S.p.A.

Warning table (Fig.18)

The thresholds of some engine parameter functions are displayed, considered fundamental to identify the type of engine use: The thresholds of some engine parameter functions are displayed, considered fundamental to identify the type of engine use:
The set threshold value of some parameters is displayed, the "Minimum interval" delay and the number of times "Number of warnings" is exceeded.

Use the cursor to select the condition you would like to see in detail (for example, the "RPM High" engine status), press <Enter> to access the following window. For every occasion the threshold was exceeded (up to a maximum of 16 including the last two occasions in the order "Last and Penultimate"), this window displays the following information: the "Max … or Min …" maximum peak achieved, the initial moment of the exceeded threshold as regards the "Time" control unit, the "RPM" engine status at the start of the reading, the absolute pressure in the "MAP" intake manifold, the temperature of the "TH20" engine coolant when the threshold was exceeded and the "Duration".
Event #= event number record.
N.B. The data recorded from 1 to 16 are listed in order of time (in the first 16 LIE readings) and gravity (any readings made after the sixteenth reading which, due to their gravity, replace the first 16 readings).

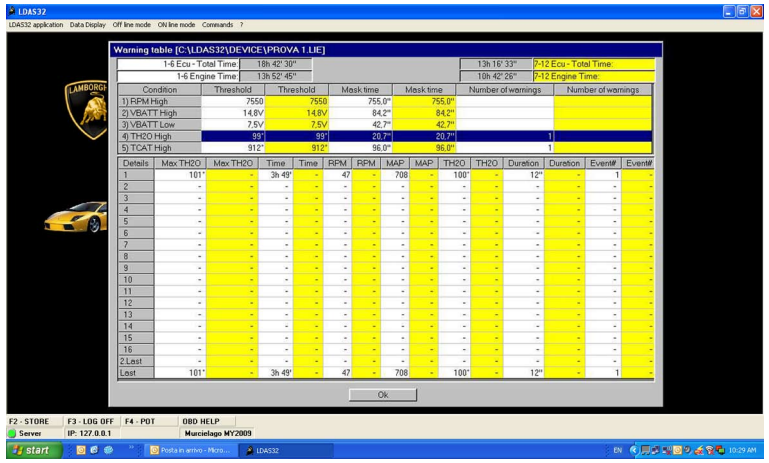

Fig.18

® Automobili Lamborghini S.p.A.
The information and procedures published below are strictly confidential and exclusively for the Lamborghini Dealer Network and Authorized Service Points. All copyrights are property of Automobili Lamborghini S.p.A based on copyright law. All of the PDF chapters in the WEB workshop manuals described below are based on information available at the time of publication. The company reserves the right to make updates and modifications. The following are prohibited: reprinting, reproduction, forwarding to unauthorized people and/or third parties, and translation, including partial, without written authorization from Automobili Lamborghini S.p.A.

Starting attempts (Fig.19)

Displays the number of successful or failed engine starts compared to the water temperature for each cylinder bank.

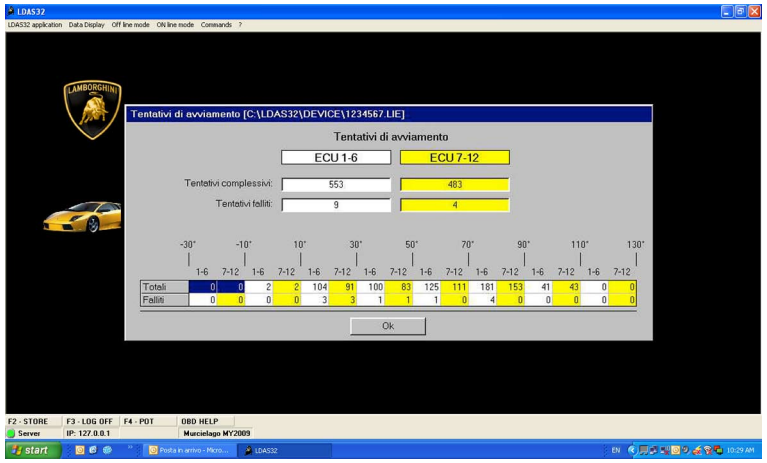

Fig.19

® Automobili Lamborghini S.p.A.
The information and procedures published below are strictly confidential and exclusively for the Lamborghini Dealer Network and Authorized Service Points. All copyrights are property of Automobili Lamborghini S.p.A based on copyright law. All of the PDF chapters in the WEB workshop manuals described below are based on information available at the time of publication. The company reserves the right to make updates and modifications. The following are prohibited: reprinting, reproduction, forwarding to unauthorized people and/or third parties, and translation, including partial, without written authorization from Automobili Lamborghini S.p.A.

Errors

The display on the screen (**Fig.20**) summarises the errors in the system.

Errors may include:

Confirmed errors	A confirmed error indicating exhaust problems
Pending errors	An error that crops up during the running cycle but does not regard exhaust problems. If the same error crops up during the subsequent trip, the engine control pilot lamp lights up and the error is directly assigned to “Confirmed errors”. However, if the system no longer reads the error, it remains in the “Pending errors” memory for the subsequent 80 cycles; it is then automatically reset.

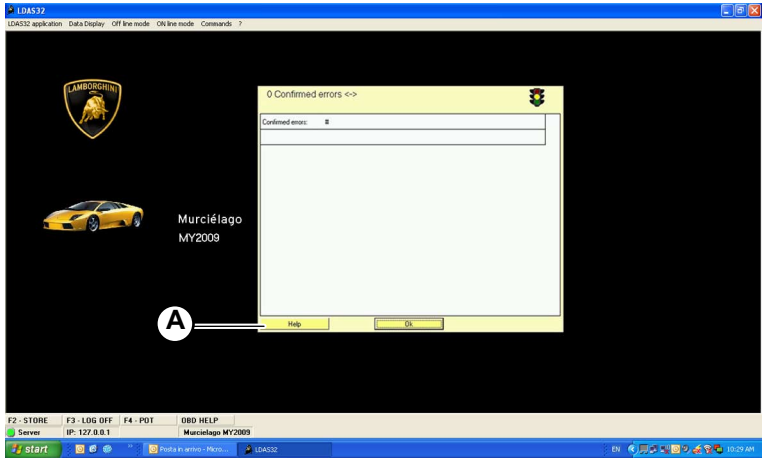

Fig.20

If errors are reset, the following are automatically reset:
- **“Confirmed errors”**
- **“Pending errors”**
- **lifting system errors (counters are reset)**

The presence of any errors is highlighted in the bottom line of the LDAS32 program.

If there are diagnosis problems, the system offers assistance with the “HELP” key (**A-Fig.20**). This opens an Acrobat Reader window containing a list of all of the error codes, possible problems and relative remedies.

® Automobili Lamborghini S.p.A.
The information and procedures published below are strictly confidential and exclusively for the Lamborghini Dealer Network and Authorized Service Points. All copyrights are property of Automobili Lamborghini S.p.A based on copyright law. All of the PDF chapters in the WEB workshop manuals described below are based on information available at the time of publication. The company reserves the right to make updates and modifications. The following are prohibited: reprinting, reproduction, forwarding to unauthorized people and/or third parties, and translation, including partial, without written authorization from Automobili Lamborghini S.p.A.

Version

The display (**Fig.21**) supplies information regarding the type of map, version, year of manufacture and series number of the two LIEs, the GFA and the PMC.

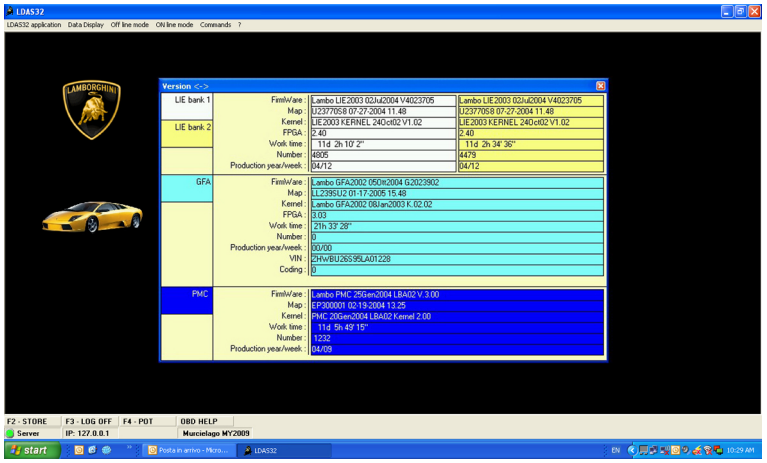

Fig.21

® Automobili Lamborghini S.p.A.
The information and procedures published below are strictly confidential and exclusively for the Lamborghini Dealer Network and Authorized Service Points. All copyrights are property of Automobili Lamborghini S.p.A based on copyright law. All of the PDF chapters in the WEB workshop manuals described below are based on information available at the time of publication. The company reserves the right to make updates and modifications. The following are prohibited: reprinting, reproduction, forwarding to unauthorized people and/or third parties, and translation, including partial, without written authorization from Automobili Lamborghini S.p.A.

Commands

Thanks to the pull-down menu (**Fig.22**), it is possible to reset LDAS errors as well as electronic errors caused by the air intakes and the spoiler.

Functions
Reset diagnostic data
Air intakes and stabilizer commands
VIS/VVT commands
Lifting system commands
Program

Notes for each pull-down menu screen are supplied for properly interpreting its data.

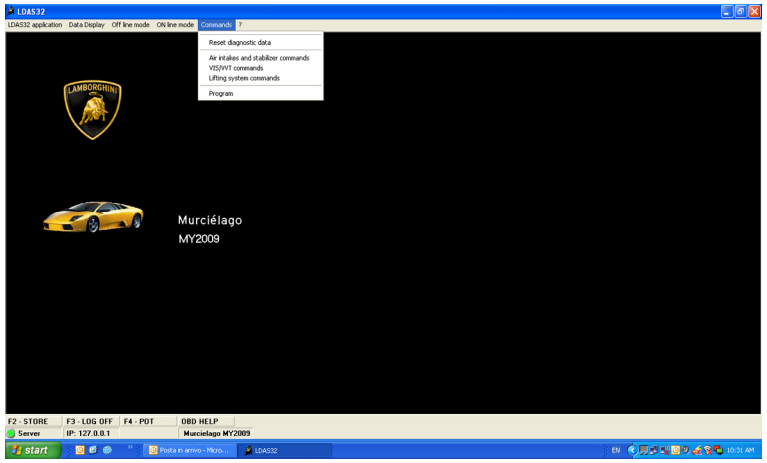

Fig.22

® Automobili Lamborghini S.p.A.
The information and procedures published below are strictly confidential and exclusively for the Lamborghini Dealer Network and Authorized Service Points. All copyrights are property of Automobili Lamborghini S.p.A based on copyright law. All of the PDF chapters in the WEB workshop manuals described below are based on information available at the time of publication. The company reserves the right to make updates and modifications. The following are prohibited: reprinting, reproduction, forwarding to unauthorized people and/or third parties, and translation, including partial, without written authorization from Automobili Lamborghini S.p.A.

Reset diagnostic data

The display (**Fig.23**) shows the outcome of the automatic error reset.
If the outcome is positive, the error display is empty.

This function automatically resets “Confirmed Pending errors” and Lifting system diagnosis errors. Before resetting, store all the parameters to avoid losing all the data.

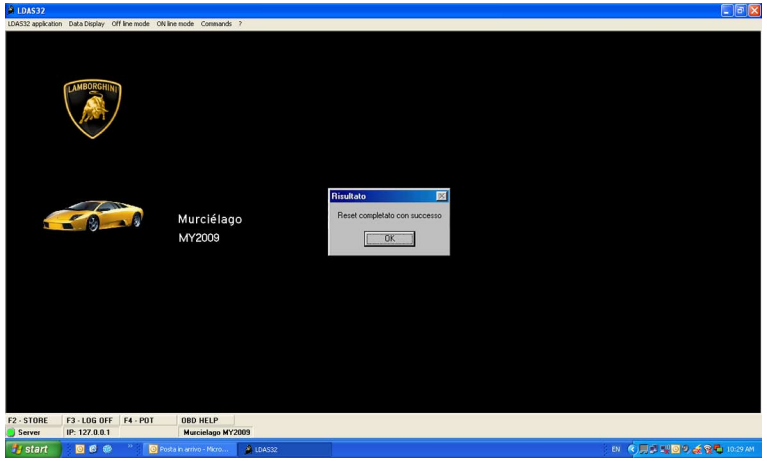

Fig.23

® Automobili Lamborghini S.p.A.
The information and procedures published below are strictly confidential and exclusively for the Lamborghini Dealer Network and Authorized Service Points. All copyrights are property of Automobili Lamborghini S.p.A based on copyright law. All of the PDF chapters in the WEB workshop manuals described below are based on information available at the time of publication. The company reserves the right to make updates and modifications. The following are prohibited: reprinting, reproduction, forwarding to unauthorized people and/or third parties, and translation, including partial, without written authorization from Automobili Lamborghini S.p.A.

Air intakes and stabilizer commands

Thanks to the display (**Fig.24**), it is possible to manually open/close moveable devices (air intakes and spoiler) even individually. During movement, the motor input currents are displayed in bits. The open, stop and close buttons become active after connection with the control unit.
The correct input value of the motors is approx. 60÷80 bits. If this value is exceeded, a thermal cut-out is triggered to avoid damage to the motors in case there are any hindrances preventing the spoiler or air intakes from functioning correctly.

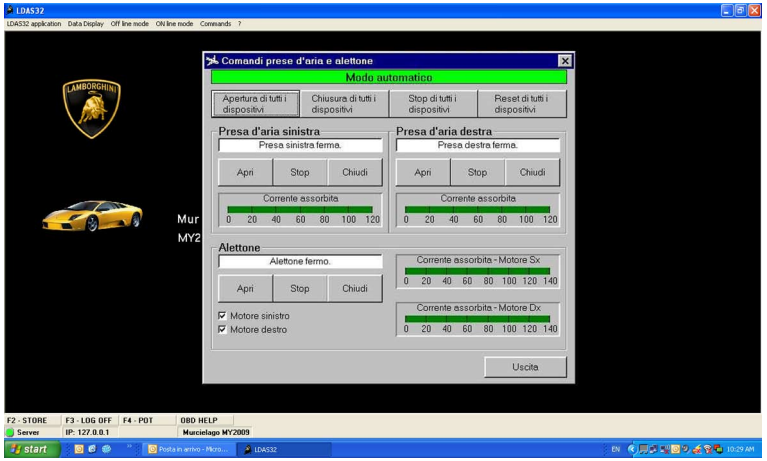

Fig.24

® Automobili Lamborghini S.p.A.
The information and procedures published below are strictly confidential and exclusively for the Lamborghini Dealer Network and Authorized Service Points. All copyrights are property of Automobili Lamborghini S.p.A based on copyright law. All of the PDF chapters in the WEB workshop manuals described below are based on information available at the time of publication. The company reserves the right to make updates and modifications. The following are prohibited: reprinting, reproduction, forwarding to unauthorized people and/or third parties, and translation, including partial, without written authorization from Automobili Lamborghini S.p.A.

VIS/VVT commands

Thanks to the display (**Fig.25**), it is possible top manually manage the intake manifold valves, the phase transformers and the engine cooling fans. The references indicated below regard the inputs to each individual control unit.

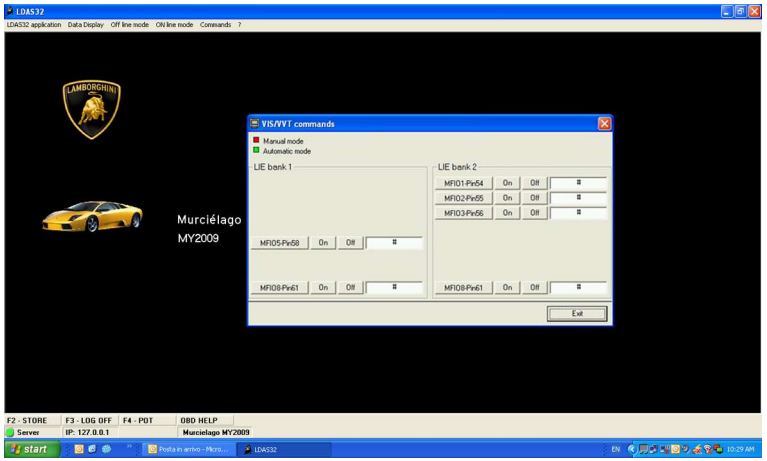

Fig.25

LIE 1/6 outputs with relative pilots:
MF105-Pin58: Air pump relay activation
MF108-Pin61: Relay energizing right fan activation

LIE 7/12 outputs with relative pilots:
MF101-Pin54: Activation of the exhaust ECS system solenoid valve (EU only) – silencer noise control
MF102-Pin55: Activation of the solenoid valve for the Plenum VIS system – upper part
MF103-Pin56: Activation of the solenoid valve for the Bypass VIS system – lower part
MF108-Pin61: Relay energizing left fan activation

® Automobili Lamborghini S.p.A.
The information and procedures published below are strictly confidential and exclusively for the Lamborghini Dealer Network and Authorized Service Points. All copyrights are property of Automobili Lamborghini S.p.A based on copyright law. All of the PDF chapters in the WEB workshop manuals described below are based on information available at the time of publication. The company reserves the right to make updates and modifications. The following are prohibited: reprinting, reproduction, forwarding to unauthorized people and/or third parties, and translation, including partial, without written authorization from Automobili Lamborghini S.p.A.

OBD HELP

"OBD HELP" (**A-Fig.26**) opens an Acrobat Reader document containing a list of all of the error codes, possible problems and relative remedies.

The document containing the error codes provides a diagnosis tree: Simply click on a code to display the problems and remedies related to that code. Return to the list of all of the codes by clicking on "Return to start page" at the bottom of each page.

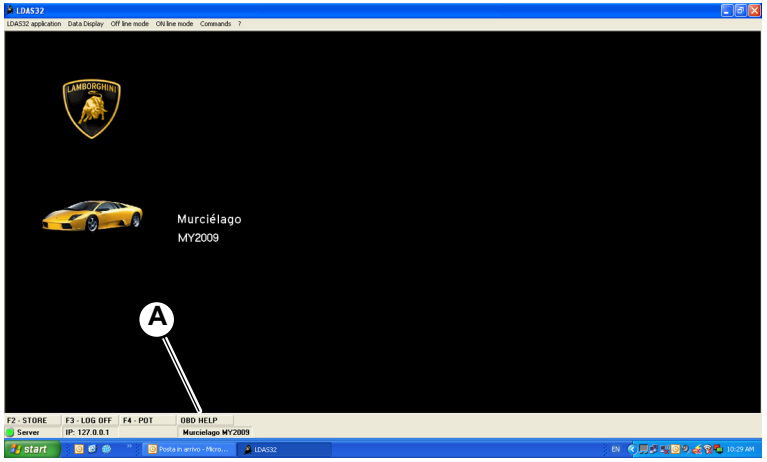

Fig.26

® Automobili Lamborghini S.p.A.
The information and procedures published below are strictly confidential and exclusively for the Lamborghini Dealer Network and Authorized Service Points. All copyrights are property of Automobili Lamborghini S.p.A based on copyright law. All of the PDF chapters in the WEB workshop manuals described below are based on information available at the time of publication. The company reserves the right to make updates and modifications. The following are prohibited: reprinting, reproduction, forwarding to unauthorized people and/or third parties, and translation, including partial, without written authorization from Automobili Lamborghini S.p.A.

Installation Rear View Camera kit

STOP **Provide the VIN of the car on which the rear view camera will be installed (if not supplied when ordered). For safety reason, on the cars MY'09 with a VIN number lower than 3420, the original multimedia system has to be changed to fit the rear view camera. The original multimedia system has to be returned to the Automobili Lamborghini Spare-Parts department. In the specific accessory kit for these cars a new multimedia system is included.**

Operazioni preliminari

- Unplug (without remove it) the vehicle's battery **(091503)**.
- Disassemble the air-conditioner grille **(081603)**.
- Disassemble the multimedia system **(097503 – reference B)**.
- Disassemble the dashboard cover (kombi) **(086803 – reference E)**.
- Disassemble the steering wheel cover (**087503 – reference A)**
- Disassemble the rear central grid **(081303 – reference A)**.

Positioning of the camera's control unit (camera ECU).

1. In the opening where the dashboard cover was placed, locate the two bushes (**A-Fig.1**) that are fixed on the lateral side of the vertical beam (**B-Fig.1**) of the chassis.

2. Using the bushes located with the previous operation and the two screws supplied with the kit (**D-Fig.2**), fix the camera ECU (**C-Fig.2**) on the vertical beam of the chassis.

3. Locate the free brown connector (**E-Fig.3**) that is present under the steering wheel cover behind the connector of the ignition key.

4. As shown in the picture beside (**F-Fig.2**), connect the brown connector (**E-Fig.3**) that was located with the previous operation to the camera ECU.

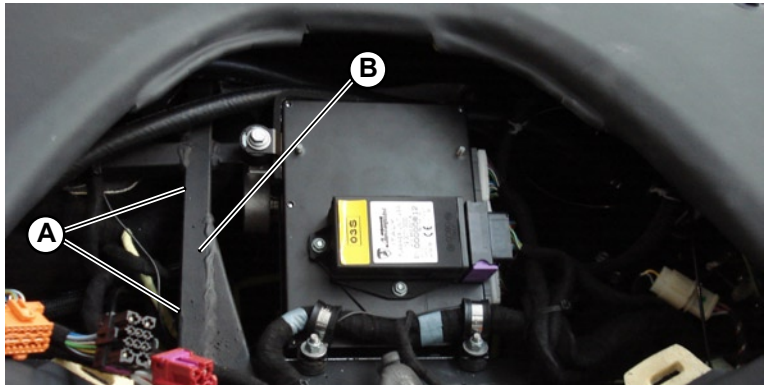

Fig.1

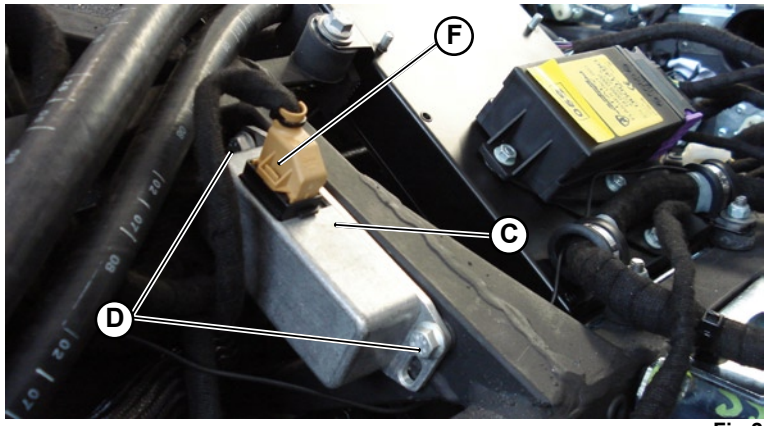

Fig.2

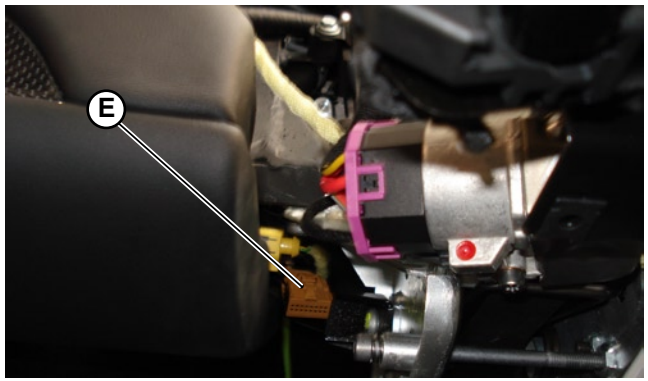

Fig.3

® Automobili Lamborghini S.p.A.
The information and procedures published below are strictly confidential and exclusively for the Lamborghini Dealer Network and Authorized Service Points. All copyrights are property of Automobili Lamborghini S.p.A based on copyright law. All of the PDF chapters in the WEB workshop manuals described below are based on information available at the time of publication. The company reserves the right to make updates and modifications. The following are prohibited: reprinting, reproduction, forwarding to unauthorized people and/or third parties, and translation, including partial, without written authorization from Automobili Lamborghini S.p.A.

5. Locate the video connector (**G-Fig.4**) that is present behind the multimedia system; it is a black jack with a yellow ring between the plastic part and the metal one.

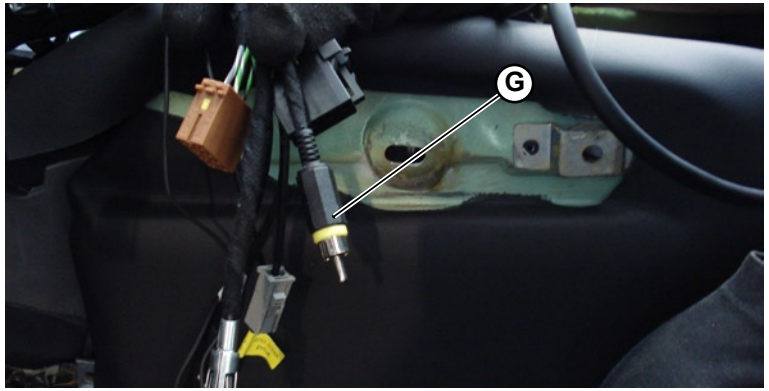

Fig.4

6. Connect the video connector (**G-Fig.4**) to the multimedia systema; the video jack has to be connect to the yellow connector (**H-Fig.5**) that is marked by a label with the sign “rear view camera”.

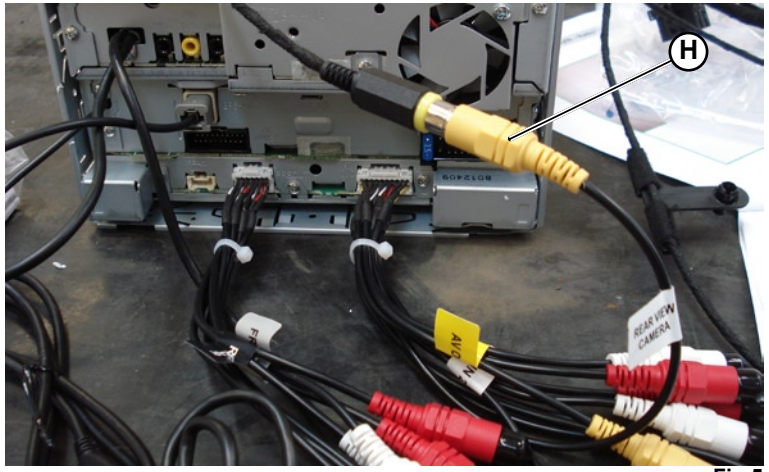

Fig.5

On the cars MY’09 with a VIN number lower than 3420, the original multimedia system has to be changed and returned to the factory. The specific accessory kit for these cars contain a new multimedia system.

- Assemble the air-conditioner grille **(081605)**.
- Assemble the multimedia system **(097505 – reference B)**.
- Assemble the dashboard cover (kombi) **(086805 – reference E)**.
- Assemble the steering wheel cover (**087505 – reference A)**

® Automobili Lamborghini S.p.A.
The information and procedures published below are strictly confidential and exclusively for the Lamborghini Dealer Network and Authorized Service Points. All copyrights are property of Automobili Lamborghini S.p.A based on copyright law. All of the PDF chapters in the WEB workshop manuals described below are based on information available at the time of publication. The company reserves the right to make updates and modifications. The following are prohibited: reprinting, reproduction, forwarding to unauthorized people and/or third parties, and translation, including partial, without written authorization from Automobili Lamborghini S.p.A.

7. Ass shown in the picture beside, fix the camera module (**I-Fig.6**) on the new rear central grid (**L-Fig.6**) supplied with the kit. Two fixing point of the camera module (**M-Fig.6**) are the same used to the licence plate lamps; in the other two fixing points (**N-Fig.6**) it is necessary to use the new screws, the washers and the bolts supplied with the kit.

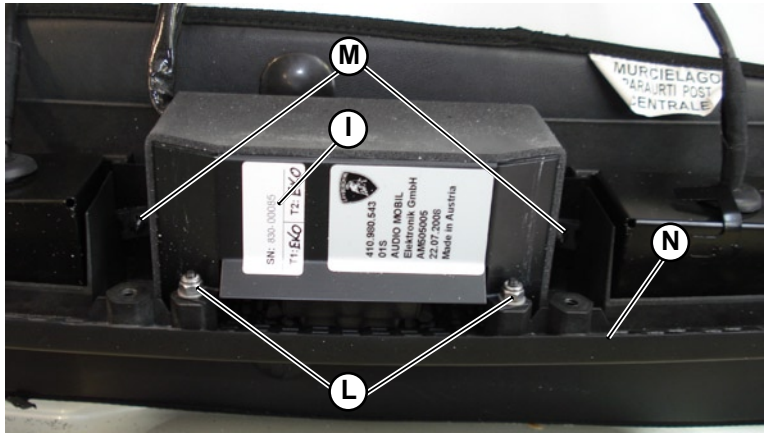

Fig.6

- Connect the vehicle's battery **(091505)**

8. It's necessary to adjust the camera assembly so that the its images will be perfectly centred on the multimedia system's monitor. To carry out this operation, switch the multimedia system, engage the reverse and verify that the images is centre on the monitor; if not, it's necessary to operate on the fixing points of the camera module in order to adjust its assembly.

9. Locate the black connector (**O-Fig.7**) that is fixed on a support behind the rear central grid near the left rear lamp.

10. Connect the black connector (**O-Fig.7**) located with the previous operation to the wiring harness of the camera module.

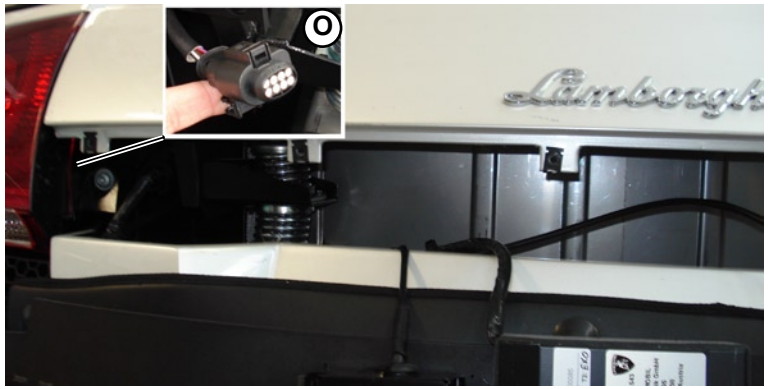

Fig.7

Final operation

- Assemble the rear central grid **(081305 – reference A)**..

The picture beside (**Fig.8**), show as the car's rear must be if the rear view camera is fitted in the right way.

Fig.8

® Automobili Lamborghini S.p.A.
The information and procedures published below are strictly confidential and exclusively for the Lamborghini Dealer Network and Authorized Service Points. All copyrights are property of Automobili Lamborghini S.p.A based on copyright law. All of the PDF chapters in the WEB workshop manuals described below are based on information available at the time of publication. The company reserves the right to make updates and modifications. The following are prohibited: reprinting, reproduction, forwarding to unauthorized people and/or third parties, and translation, including partial, without written authorization from Automobili Lamborghini S.p.A.

Installation of the GSM/GPS Tracking System

The accessory GSM/GPS Tracking System generically can be defined as Vehicle Tracking System. In this workshop manual, the initials VTS is the abbreviation of Vehicle Tracking System, therefore every time the initials VTS appears it reports to the accessory that is being installed.

The composition of the kit.

In the kit that is supplied by Lamborghini the elements those are showed in the **picture 1** are present:

1. Control Unit (ECU) of the VTS - quantity 1;
2. Driver-Card/Remote-Button - quantity 2 (only 1 for the Belux market);
3. bracket necessary to fix the VTS ECU in the car - quantity 1;
4. user manual of the VTS - quantity 1;
5. harness of the VTS (VTS harness) - quantity 1;
6. top part of the metal cage that is used to contain the VTS ECU - quantity 1;
7. bottom part of the metal cage that is used to contain the VTS ECU - quantity 1;

In the kit the following three antennas those are showed in the **picture 2** are included:

8. GSM antenna: it must be fixed in the car so that its flat surface will be upwards. It's mean that the side that must be fixed on the vehicle's part will be the side where the antenna's cable is connected.
9. GPS antenna: it must be fixed under the windscreen in a perfectly horizontal position.
10. Antenna of the Driver Cards: it must be fixed to a earth point and it will be not covered by metallic parts.

Nel kit è fornito il seguente materiale d'installazione illustrato in **figura 3**:

11. M6 self-locking nut - quantity 2;
12. M5 self-locking nut - quantity 2;
13. M6 hexagonal head screw M6 - quantity 2;
14. M5 torx screw - quantity 2;
15. little faston - quantity 5;
16. big faston - quantity 5;
17. black connector for the fuse - quantity 2;
18. red fuse 10A - quantità 1;
19. beige fusibile 5A - quantity 1;
20. adhesive pad - quantity 1.

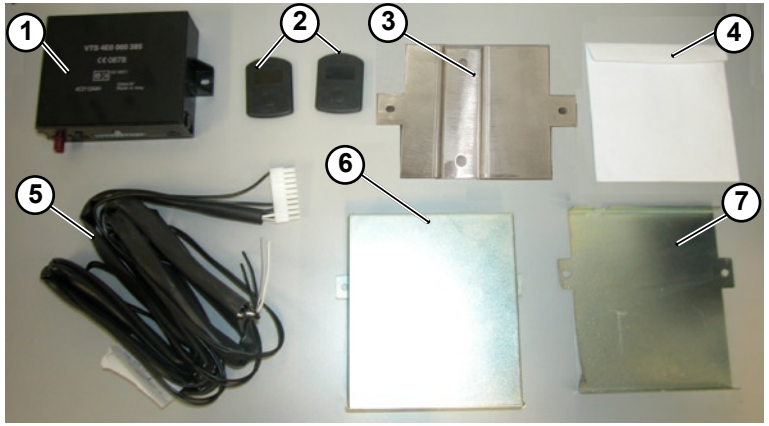

Fig.1

Fig.2

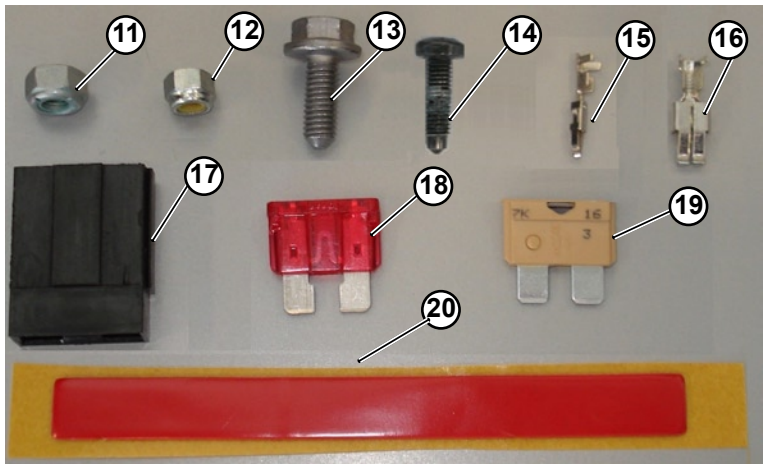

Fig.3

® Automobili Lamborghini S.p.A.
The information and procedures published below are strictly confidential and exclusively for the Lamborghini Dealer Network and Authorized Service Points. All copyrights are property of Automobili Lamborghini S.p.A based on copyright law. All of the PDF chapters in the WEB workshop manuals described below are based on information available at the time of publication. The company reserves the right to make updates and modifications. The following are prohibited: reprinting, reproduction, forwarding to unauthorized people and/or third parties, and translation, including partial, without written authorization from Automobili Lamborghini S.p.A.

Communication of the data to the "National Service Provider"

1. Download the VTS Service documentation at: www.cobra-at.com. To carry out this activity:
   - Click on "Login" (upper right of the page).
   - Enter your country login and password.

These login and password can be provided by local service provider, phone number available at the bottom of login page.

2. Collect all the customer's and vehicle's data and fill the "VTS Application Forms"

3. Fax to the "National Service Provider" the "VTS Service Contract Form" properly filled at least 1 hour before starting the Initialisation process (described at page 10).

Preliminary operation

- Unplug (without remove it) the vehicle's battery **(091503 - only the operation 1)**
- Disassemble the passenger side lower dashboard **(086803 – reference C)**
- Disassemble the side member cover **(086803 – reference R)**
- Disassemble the seat rear cover **(086803 – reference Z)**
- Disassemble the seat rear cover panels **(086803 – reference W).**
- Disassemble the dashboard cover **(**kombi) **(086803 – reference E)**
- Disassemble the air-conditioner grille assembly **(081603)**
- Disassemble the tunnel end panels **(086303 – reference A)**

Postioning of the GSM, GPS and Driver-Card Antennas.

The control unit of the Tracking System will be installed in the zone of the passenger side lower dashboard. For this reason the all harnesses of the antennas that are installed now have to be positioned so that their connectors arrive in the zone of the passenger side lower dashboard.

4. Remove the little pellicle on the adhesive that are present under the GPS antenna.

5. Pay attention to the informations concerning the GPS antenna present in the previous page. Position the GPS antenna (**9-Fig.2**) in a perfectly horizzontal position on the box of the air-conditioner 's pipeline (**A-Fig.4**) that are present behind the central air-nozzle. To carry out this operation, we suggest to pass through the empty space where there was positioned dashboard cover **(**kombi).

6. Fix the adhesive pad (**20-Fig.3**) supplied with the kit on the not flat surface of the GSM antenna (**8-Fig.2**) (the right side is the one where the antenna's harness is insert.).

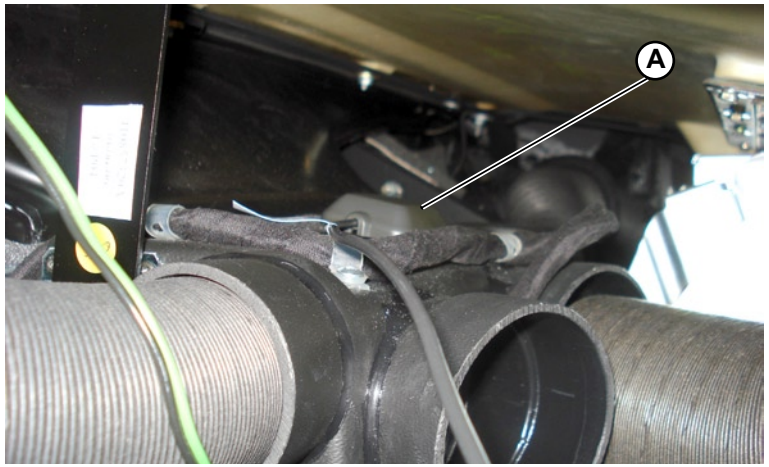

Fig.4

® Automobili Lamborghini S.p.A.
The information and procedures published below are strictly confidential and exclusively for the Lamborghini Dealer Network and Authorized Service Points. All copyrights are property of Automobili Lamborghini S.p.A based on copyright law. All of the PDF chapters in the WEB workshop manuals described below are based on information available at the time of publication. The company reserves the right to make updates and modifications. The following are prohibited: reprinting, reproduction, forwarding to unauthorized people and/or third parties, and translation, including partial, without written authorization from Automobili Lamborghini S.p.A.

7. Position the GSM antenna (**B-Fig.5**) with the adhesive pad under the dashboard underlain the windscreen; the GSM antenna have to be fixed between the dashboard and the cross beam that is present close to it. The side more flat of the antenna (the side where there is not the wire connection) have to been upward, as it's shown in the picture beside (**C-Fig.5**).

8. On the cross beam of the chassis under the dashboard, on the right side of the empty space where there was the kombi, locate the exagonal screw (**D-Fig.6**) where it's fixed a earthing wire of a car's harness.

9. Earth the Driver-Card antenna (**10-Fig.2**); to carry out this operation, unscrew the screw (**D-Fig.6**), that was located by previous operation, and insert it in the little loop present on the harness of the Drive-Card Antenna (**E-Fig.6**) afterwards fix the screw (with the loop) in the same position where it was before this work (**E-Fig.6**).

10. Position the harnesses of the GPS, GSM and Driver-Card antenna from the position where the antennas are fixed to the passenger side lower dashboard.

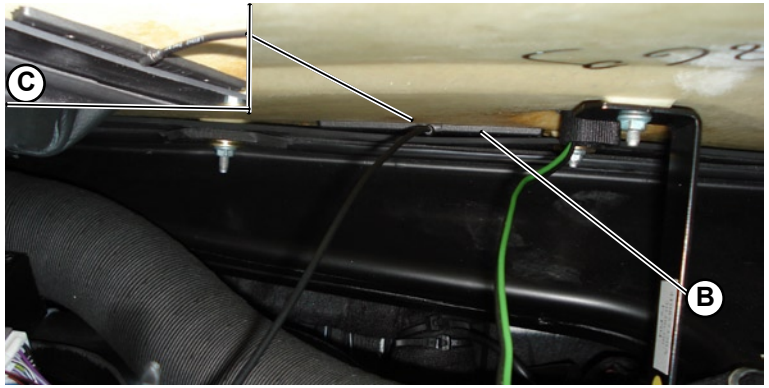

Fig.5

Fig.6

STOP **The harnesses of the 3 antennas are longer than necessary; absolutely do not cut the antennas' harness. It's necessary place them in an orderly manner in the zone where the ECU will be installed and it's necessary fix it with cable tie or adhesive tape at some fixed support (like other harnesses of bracket). In order to avoid possible malfunctions of the VTS, it's necessary do not wrap up the harnesses in tight way.**

Preparation of the GSM/GPS Tracking System's harness.

At the end of each wire of the VTS harness (that is supplied with the kit) there are a little sign in order to identify which is the function of that wire. An example of those signs are show in the picture (F-**Fig.7**).
The following table describe the layout of the VTS harness.

VTS Control Unit's Connector			
PIN	Colour	Sign	Function
1	Black	1	Crank inhibition (in)
7	Black	1	Crank inhibition (out)
8	Black	+15	Verify the engine start (Key on)
9	White		Output to control the buzzer
10	Grey-White		Verify the antitheft start.
19	Black	+30	Power supply
20	Black	GND	Ground Signal

The white and wire will be not used to install the GSM/GPS Tracking System on Gallardo.
If you choose to shorten the cable, cutting the ends of the wires, we suggest to mark each wire, as you please, in order to can identify the different wire also after have shorten them.

Fig.7

® Automobili Lamborghini S.p.A.
The information and procedures published below are strictly confidential and exclusively for the Lamborghini Dealer Network and Authorized Service Points. All copyrights are property of Automobili Lamborghini S.p.A based on copyright law. All of the PDF chapters in the WEB workshop manuals described below are based on information available at the time of publication. The company reserves the right to make updates and modifications. The following are prohibited: reprinting, reproduction, forwarding to unauthorized people and/or third parties, and translation, including partial, without written authorization from Automobili Lamborghini S.p.A.

11. In the VTS harness that is supplied with the kit, identify the wire of the power supply; this wire is characteristic by the sign +30 at its end. Cut the wire and uncover the two extremes those are derived from the cutting.

We suggest to cut the wire of the power supply and the one of “key on” (operation 15) 20 cm before the end of these wires. To realize this operation it’s also necessary to cut and open the end part of the cable sheath.

12. Connect one of the four big fastons (1**6-Fig.3**) supplied with the kit to each uncovered extremes (**G-Fig.8**).

13. Insert the two extremes with the fastons (**G-Fig.8**) in one of the two black connectors (1**7-Fig.3**) supplied with the kit; the two extremes with the fastons must be insert until it’s possible to hear a little click and the wires are blocked in the black connector (**H-Fig.8**).

14. As showed in the picture beside (**Fig.8**), insert in the black connector (**H-Fig.8**), at the opposite side of the wires, the red fuse 10A (1**8-Fig.3**) supplied with the kit.

STOP **When the red fuse is assemble, it’s necessary remove it from the black connector. This red fuse will have to be assemble, in the same manner that is here described, during the initialisation process of the VTS (the step 2 of the procedure). At this point, it’s necessary to be sure that the VTS harness is ready and memorize the position of the black connector where the red fuse will have to be insert.**

15. In the VTS harness that is supplied with the kit, identify the wire of the “key on”; this wire is characteristic by the sign +15 at its end. Cut the wire and uncover the two extremes those are derived from the cutting.

16. Connect one of the big fastons (1**6-Fig.3**) supplied with the kit to each uncovered extremes.

17. Insert the two extremes with the fastons (**G-Fig.8**) in one of the two black connectors (1**7-Fig.3**) supplied with the kit; the two extremes with the fastons must be insert until it’s possible to hear a little click and the wires are blocked in the black connector (**H-Fig.8**).

18. Insert in the black connector (**H-Fig.8**) the beige fuse 5A (1**9-Fig.3**) supplied with the kit.

19. The final result of these operations must be the same of the one showed in the picture beside (**Fig.9**).

20. In the installation of the VTS on the Gallardo, the white wire and the grey-white wire are not used. Cut these two wires in a point near the end of the cable sheath’s and afterwards protect the wire’s end using the insulating tape.

21. Using black flock tape, unit the +30, +15 and GND wires and protect them from the end of the cable sheath to the end of themselves.

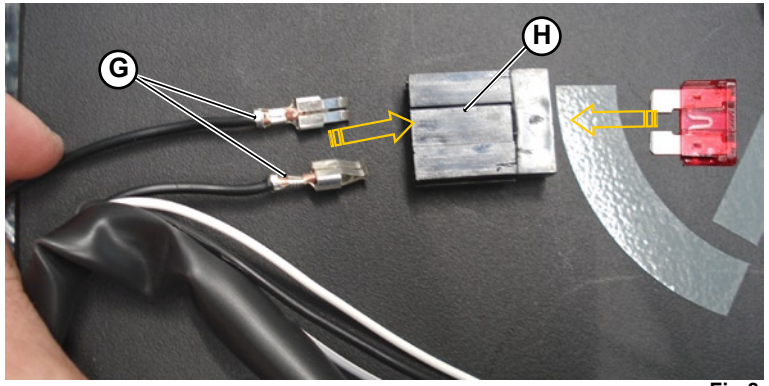

Fig.8

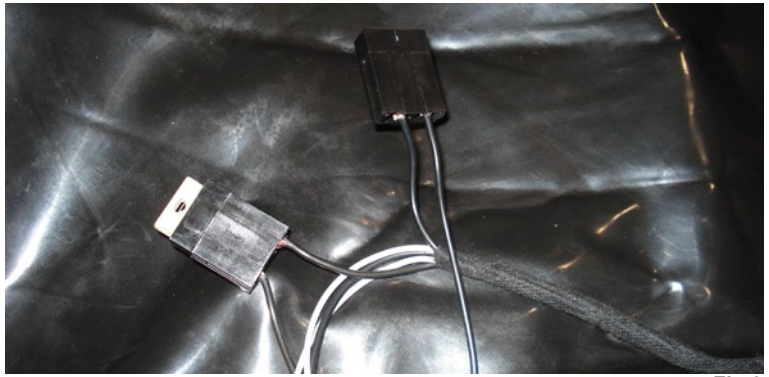
Fig.9

® Automobili Lamborghini S.p.A.
The information and procedures published below are strictly confidential and exclusively for the Lamborghini Dealer Network and Authorized Service Points. All copyrights are property of Automobili Lamborghini S.p.A based on copyright law. All of the PDF chapters in the WEB workshop manuals described below are based on information available at the time of publication. The company reserves the right to make updates and modifications. The following are prohibited: reprinting, reproduction, forwarding to unauthorized people and/or third parties, and translation, including partial, without written authorization from Automobili Lamborghini S.p.A.

22. Locate the blue connector (**I-Fig.10**) that is present in the zone buhind the passenger seat (only one black wire is conneted at this blue connector) afterwards remove this blue connector (**I-Fig.10**) from the connector that fix it at the car.

23. Uncover the ends of the following wires of the VTS harness: +30, +15, GND and the white-grey wire; these are the wire those are contained in the the cable sheath.

24. Fix at each uncovered ends of these wires one of the little faston (**15-Fig.3**) supplied with the kit.

25. Using a little screwdriver, open the blue connector extracting the violet part that is present inside it, as it's showm in the picture (**L-Fig.11**).

26. As it's shown in the picture beside (**M-Fig.11**), insert the wires with the little faston (**O-Fig.11**) into the blue connector (**H-Fig.10**) (that was removed from the car by the operation 24) following the layout shown in the table under here:

VTS Wires - White connector				Blue connector (n°224/1)		
PIN	Colour	Sign		PIN	Signal	Blue connector's layout
20	Black	GND	→	7	Ground	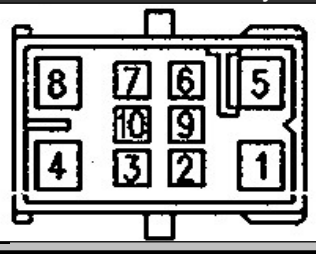
19	Black	+30	→	3	+30	
8	Black	+15	→	2	+15	
10	Grey-White		→	6	Alarm	

STOP **Absolutely do not remove the black wire that is originaly connected into the blue connector.**

The picture beside **(Fig.12)** show how the VTS harness' end part (excluded the two wires for the crank inhibition) have to be after these (operation to prepare) it was carried out.

27. Unit and cover with the black flock tape the two wires those are necessary to carry out the crank inhibition; these two wires are black and at their and there is the sign "1". It's necessary to unit and cover them from the white connector until about 70 cm before their end.

Connectioning of the harness of the GMS/GPS Tracking System.

28. Connect the blue connector (**Q-Fig.12**), where the wires of the VTS harness have been inserted, in the same position (**I-Fig.10**) where it was present on the car before start these operations.

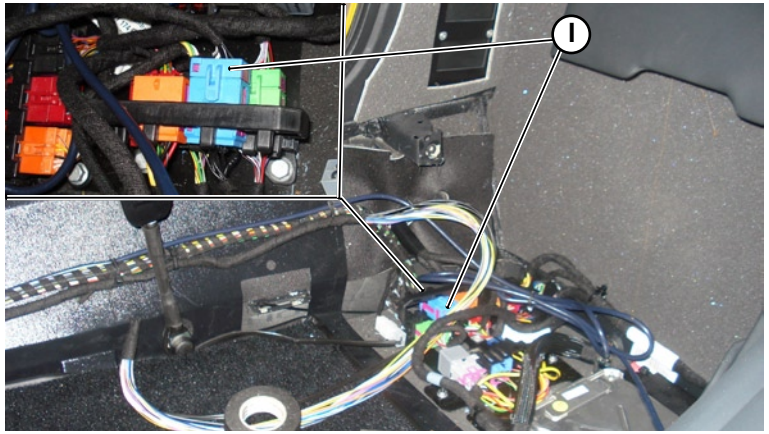

Fig.10

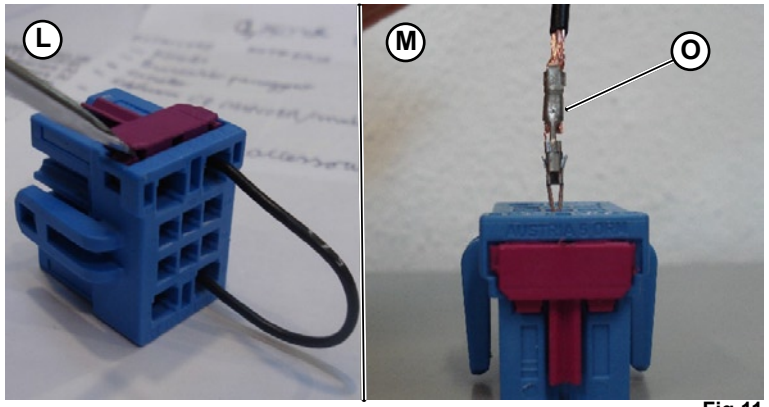

Fig.11

Fig.12

® Automobili Lamborghini S.p.A.
The information and procedures published below are strictly confidential and exclusively for the Lamborghini Dealer Network and Authorized Service Points. All copyrights are property of Automobili Lamborghini S.p.A based on copyright law. All of the PDF chapters in the WEB workshop manuals described below are based on information available at the time of publication. The company reserves the right to make updates and modifications. The following are prohibited: reprinting, reproduction, forwarding to unauthorized people and/or third parties, and translation, including partial, without written authorization from Automobili Lamborghini S.p.A.

29. Position the wires of the VTS harnesse (**R-Fig.13**), those are contained in the cable sheath, from the blue connector (behind the passenger seat) to the passenger side lower dashboard. Fix the cable sheath under the side member cover, using the balck cable tie (**R-Fig.13**) supplied with the kit and fixing it at the other car's harness that is present in that zone.

30. Position the wires of the crank inhibition (those have the sign "1" at the end), those was covered before (operation 27), from the white connector of the VTS harness that was positioned in the passenger side lower dashboard to the tunnel end of the driver side (**Fig.15**); uncover the end of these two wires (V-**Fig.15**).

    These wires for the crank inhibition have to be connected at the other wire in the zone of the tunnel end on the driver side. After have fixed them at some fixed point (other harness or bracket) it is possible shorten them cutting the end part..

31. Locate the control unit of the car's antitheft (**S-Fig.14**) that was present behind the air-conditioner grille assembly and the disconnect its main white connector (**T-Fig.14**).

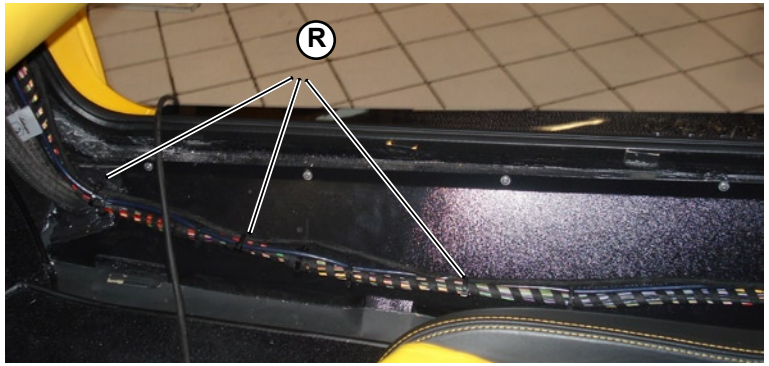

Fig.13

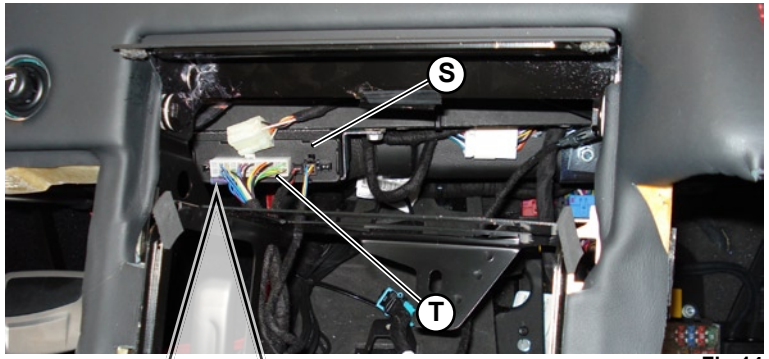

Fig.14

The picture beside (**U-Fig.14**) show the layout of the white connector of the car's antitheft control unit.; that layout can be useful to carry out the following operation.

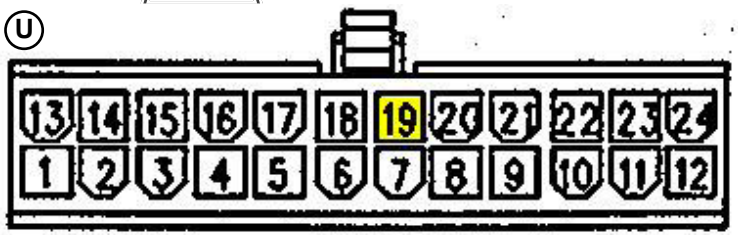

® Automobili Lamborghini S.p.A.
The information and procedures published below are strictly confidential and exclusively for the Lamborghini Dealer Network and Authorized Service Points. All copyrights are property of Automobili Lamborghini S.p.A based on copyright law. All of the PDF chapters in the WEB workshop manuals described below are based on information available at the time of publication. The company reserves the right to make updates and modifications. The following are prohibited: reprinting, reproduction, forwarding to unauthorized people and/or third parties, and translation, including partial, without written authorization from Automobili Lamborghini S.p.A.

32. As shown in the picture beside (**V-Fig.15**), lead the white connector (**T-Fig.14**) out from the end tunnel panel of the driver side so that it will be possibile easily work on. Remove the flock tape that cover the connector's harness from the connector to 10 cm far from it.

33. Cut the blue-red wire (**X-Fig.15**) that is connected to the white connector (**W-Fig.15**) in the pin 19; uncover the two ends that are resulted from the cut, as shwn in the picture beside (**X-Fig.15**).

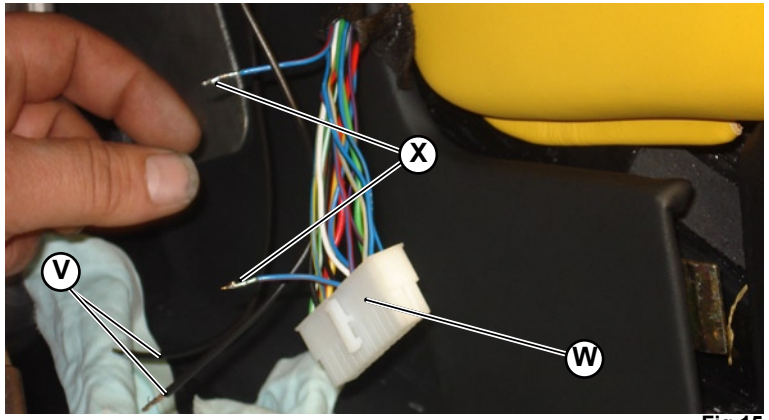

Fig.15

STOP **Do not disconnect wires present in the car from the connector. All connections between wires must be soft soldered and must then be protected with insulating tape. After making all of the connections, protect the visible part of the wiring harness with black flock tape. Be careful not to damage the car's interior when creating these connections.**

34. As shown in the picture beside (**Z-Fig.16**), solder at each end of the blue-red wire (that is connected at the white connector) one of the black wire of the VTS harness necessary for the crank inhibition.

35. Using some insulating tape, protect the two soft solders (**Z-Fig.16**) that are carried out before.

36. Unit and cover with the black flock tape the two black wires and the harness that is connected to the white connector so that all things appear as it was before to start these operations.

37. Connect the white connector (**W-Fig.15**) to control unit of the car's antitheft (**S-Fig.14**) (that is placed under the chassis' cross beam behind the air-conditioner grille assembly) as it was connected before start these operations (**T-Fig.14**)

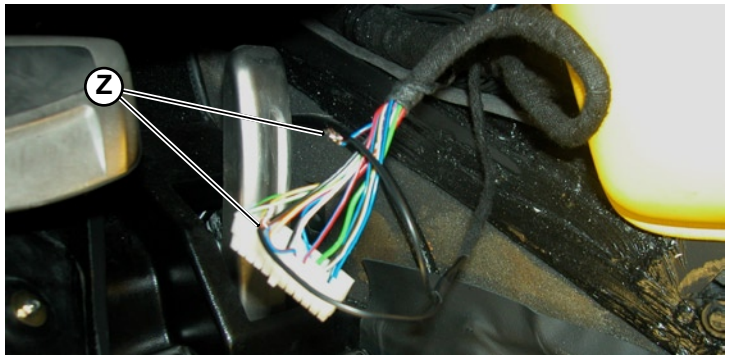

Fig.16

Connectioning of VTS Control Unit (ECU)

38. As show in the picture beside (**A-Fig.18**), assemble the end of the GSM antenna's wire (**8-Fig.2**) in the violet connector supplied with the kit.

39. Connect to the VTS ECU (**B-Fig.18**) all the necessary harnesses. In the front side, connect the connector of the VTS harness (**C-Fig.18**), the connector of the GPS antenna (**D-Fig.18**) and the one of the GSM antenna (**A-Fig.18**). In the rear part of the ECU, insert the connector of the Driver Cards antenna (**E-Fig.18**).

40. Assemble the dashboard cover (kombi) **(086805 – reference E).**

41. Assemble the air-conditioner grille assembly **(081605).**

42. Connect the vehicle's battery (Workshop Manual **091505)**

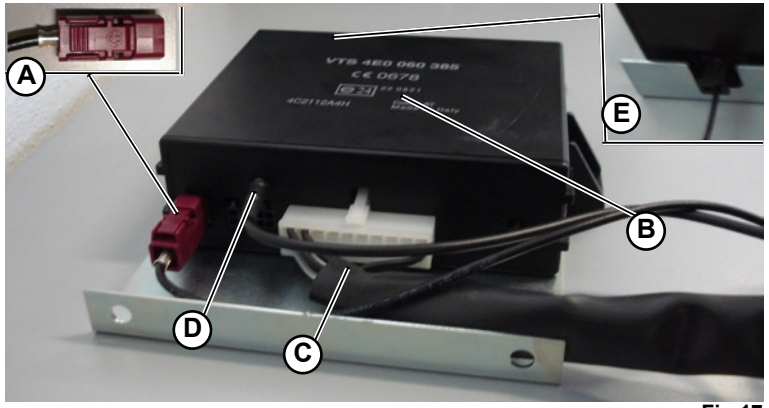

Fig.17

® Automobili Lamborghini S.p.A.
The information and procedures published below are strictly confidential and exclusively for the Lamborghini Dealer Network and Authorized Service Points. All copyrights are property of Automobili Lamborghini S.p.A based on copyright law. All of the PDF chapters in the WEB workshop manuals described below are based on information available at the time of publication. The company reserves the right to make updates and modifications. The following are prohibited: reprinting, reproduction, forwarding to unauthorized people and/or third parties, and translation, including partial, without written authorization from Automobili Lamborghini S.p.A.

Configure and activate the GSM/GPS Tracking Systems

In order to configure and activate the VTS it's necessary to call the "National Service Provider" (NSP) and at the same time carry out some operation on the car; for this reason we suggest to use a portable/mobile phone.

1. Start the car's engine in order to verify that the vehicle works fine. If there is any problem, before go on with the other operations, consult the ***"Guide to resolve the problem"*** in the last page of this manual.

2. Verify that the operation 1 and 2, at the page 1 of this manual, are done (verify the communication of the data to the "National Service Provider").

3. Follow the procedure described in the table ***"Initialisation procedure of the GSM/GPS Tracking System"*** that is present in the **next page** of this manual.

4. At the end of the initialisation process, the "National Service Provider" must confirm to Dealer the successful activation of the GSM/GPS Tracking System.

STOP **The vehicle can be deliverd to the customer only after the verification and the confirmation that the GSM/GPS Tracking System is fully operational and works fine.**

® Automobili Lamborghini S.p.A.
The information and procedures published below are strictly confidential and exclusively for the Lamborghini Dealer Network and Authorized Service Points. All copyrights are property of Automobili Lamborghini S.p.A based on copyright law. All of the PDF chapters in the WEB workshop manuals described below are based on information available at the time of publication. The company reserves the right to make updates and modifications. The following are prohibited: reprinting, reproduction, forwarding to unauthorized people and/or third parties, and translation, including partial, without written authorization from Automobili Lamborghini S.p.A.

Initialisation procedure of the GSM/GPS Tracking System

Step	Requirements			Service	Action
	Ignition	Driver card 1	Driver card 2		
1	Off	Off	Off	Advanced	Call the national service provider to initialise the VTS. Ask if data has been loaded and if it is possible to power on the ICD. End of the call [for details of country-specific telephone numbers, see VTS Service document]
2	On/Off	Off	Off	Advanced	Insert fuses to power on ICD. Switch Ignition On for 1 sec and then Off
3	On	Off	Off	Advanced	Drive the vehicle outside and park out in the open air (no canopy, etc.)
4	On	Off	Off	Advanced	Provider configures ICD and carries out diagnostics on the GPS and GSM module. When the diagnostic work is complete, the provider calls the dealer to communicate vehicle position (city,street etc.)
5	On	Press button	Press button	Advanced	Provider enables Driver Cards (DC) "learning mode". Within maximum 5 minutes, press buttons of Driver Cards, one after the other for one second. Do not switch off the Driver Cards. Provider confirms the successful Driver Cards detection.
6	On	Off	Off	Advanced	Switch off driver cards 1 & 2
7	Off	Off	Off	Advanced	Switch off ignition, wait 40 seconds.
8	Off	Off	Off	Advanced	Provider carries out internal 2nd test mode; ask if VTS is "armed"
9	Off	On	Off	Advanced	Switch on driver card 1
10	Off	On	Off	Advanced	Provider carries out internal 3rd test mode; ask if VTS is "disarmed"
11	Off	On	Off	Advanced	Ask the provider to activate the "crank inhibition"
12	Off	On	Off	Advanced	After confirmation wait 40 seconds
13	On	On	Off	Advanced	Try to start the engine; Remark: engine should not start
14	Off	On	Off	Advanced	Switch OFF the Ignition Key. Ask the provider to deactivate the "crank inhibition"
15	On	On	Off	Advanced	After confirmation try to start the engine again; Remark: engine should start
16	Off	On	Off	Advanced	Provider confirm succesfull installation and testing phase
17	Off	On	Off	Advanced	Both Drivers Cards have to be delivered to Customers. Please ensure that only one driver card is ON (LED blinking)

STOP **The vehicle can be deliverd to the customer only after the verification and the confirmation that the GSM/GPS Tracking System is fully operational and works fine**.

® Automobili Lamborghini S.p.A.
The information and procedures published below are strictly confidential and exclusively for the Lamborghini Dealer Network and Authorized Service Points. All copyrights are property of Automobili Lamborghini S.p.A based on copyright law. All of the PDF chapters in the WEB workshop manuals described below are based on information available at the time of publication. The company reserves the right to make updates and modifications. The following are prohibited: reprinting, reproduction, forwarding to unauthorized people and/or third parties, and translation, including partial, without written authorization from Automobili Lamborghini S.p.A.

Positioning of the whole: VTS ECU and metal protection cage

43. As shown in the picture beside (**Fig.18**), place the VTS Control Unit (**1-Fig.1**) (with all harnesses connected) on the bottom part of the metal cage (**7-Fig.1**) supplied with the kit.

Fig.18

44. Using the top part of the metal cage (**6-Fig.1**), close the VTS ECU (with all harnesses connected) into its metal protection cage as shown in the picture beside (**Fig.19**). The picture beside (**F-Fig.19**) shows also how the bottom part and the top one have to be perfectly jammed between them. The harnesses connected at the VTS ECU have to come out through the special hole (**G-Fig.19**) present in the side of the metal protection cage.

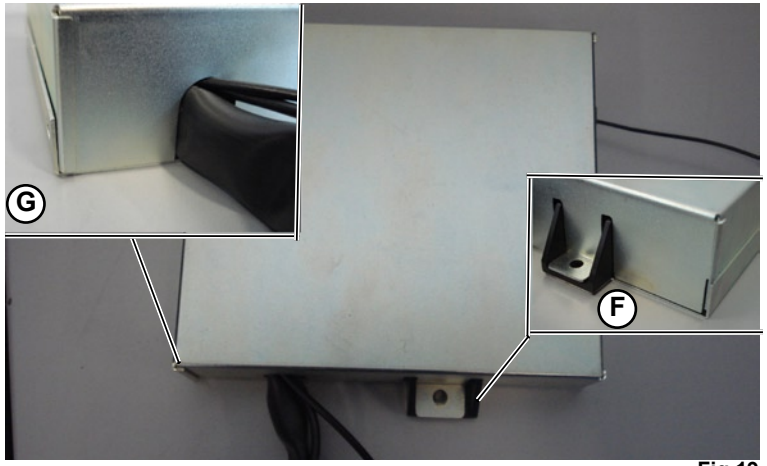

Fig.19

® Automobili Lamborghini S.p.A.
The information and procedures published below are strictly confidential and exclusively for the Lamborghini Dealer Network and Authorized Service Points. All copyrights are property of Automobili Lamborghini S.p.A based on copyright law. All of the PDF chapters in the WEB workshop manuals described below are based on information available at the time of publication. The company reserves the right to make updates and modifications. The following are prohibited: reprinting, reproduction, forwarding to unauthorized people and/or third parties, and translation, including partial, without written authorization from Automobili Lamborghini S.p.A.

45. Position the metal bracket for the fixing of the VTS ECU (**3-Fig.1)**, that is supplied with the kit, under the cross beam of the car's chassis (**H-Fig.20**) that is present in the passenger side lower dashboard; the metal bracket must be positioned so that its two central fixing holes perfectly coincide with the two holes (**I-Fig.20**) present under the chassis' cross beam. The largest flat part (of the base of the VTS ECU) have to be turn to the car's interior.

46. Fix the metal bracket in the position, where it's placed by the operation before, screwing in the its central fixing hole (**L-Fig.20**) the two M6 screw (**13-Fig.2**) supplied with the kit.

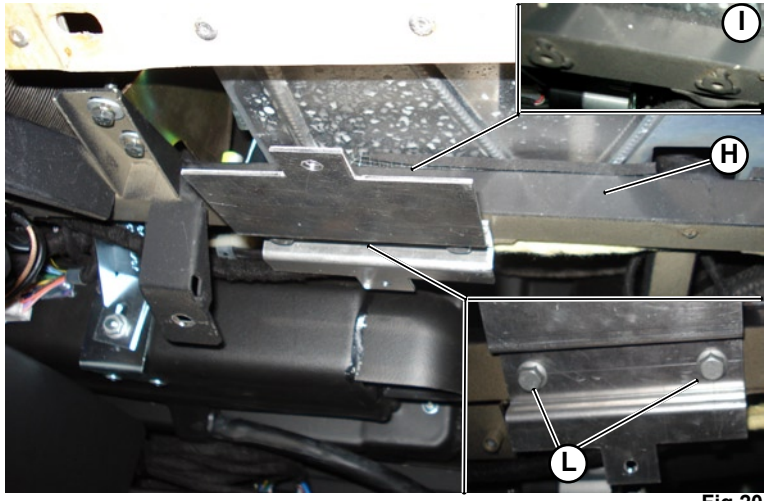

Fig.20

47. Position the VTS ECU with the metal cage (assembled by the previous operations 43 and 44) under the metal bracket for the fixing of the VTS ECU; this have to be places so that the two fixing holes of the metalic cage (**M-N-Fig.21**) perfectly coincide with the two free holes of the metallic bracket. The metallic cage have to be positioned so that the VTS harness come out from it turned to the car's interior.

48. Fix the whole VTS ECU with the metal cage at the metallic bracket using the two M5 screw (**14-Fig.2**) and the proper two M5 nuts (**12-Fig.2**) supplied with the kit; the screws have to be inserted in the two fixing hole (**I-L-Fig.21**) afterwards tighten using the two proper screw.

Fig.21

Final operations

- Assemble the passenger side lower dashboard **(086805 – reference C)**
- Assemble the seat rear cover **(086805 – reference Z)**
- Assemble the seat rear cover panels **(086803 – reference W)**
- Assemble the side member cover **(086805 – reference R).**
- Assemble the tunnel end panels **(086305 – reference A)**

® Automobili Lamborghini S.p.A.
The information and procedures published below are strictly confidential and exclusively for the Lamborghini Dealer Network and Authorized Service Points. All copyrights are property of Automobili Lamborghini S.p.A based on copyright law. All of the PDF chapters in the WEB workshop manuals described below are based on information available at the time of publication. The company reserves the right to make updates and modifications. The following are prohibited: reprinting, reproduction, forwarding to unauthorized people and/or third parties, and translation, including partial, without written authorization from Automobili Lamborghini S.p.A.

Guide to resolve the problem

Start the car's engine to verify if the vehicle works fine; if there is any problem, proceed to carry out the following checking operation.

- Verify that the VTS ECU is correctly supplied (energized). To carry out this check it's necessary to use a tester and verify that there are the following currents in the main connector of the VTS ECU:
  - 12 V in the pin 19;
  - 12 V in the pin 8 only when there is the ignition key in on position.

  If there is any anomaly, it's necessary to verify if there is a problem or interruption in the entire route of the all wires. In particular pay utmost attention at the connection between the VTS harness and the car's wire; check if the correct connection are made and if they are made in the right manner.

- Check all the connections and, most of all, the soft solders those are made during the installation process.Pay attention also to the two fuses (10A red and 5A beige) that are supplied with the kit and have been installed on the VTS harness.

Model : Spare Parts MURCIELAGO SV LP 670-4 Market: USA MY 2010

Group : 010-NAMEPLATES

Table : 010.01.00-NAMEPLATES

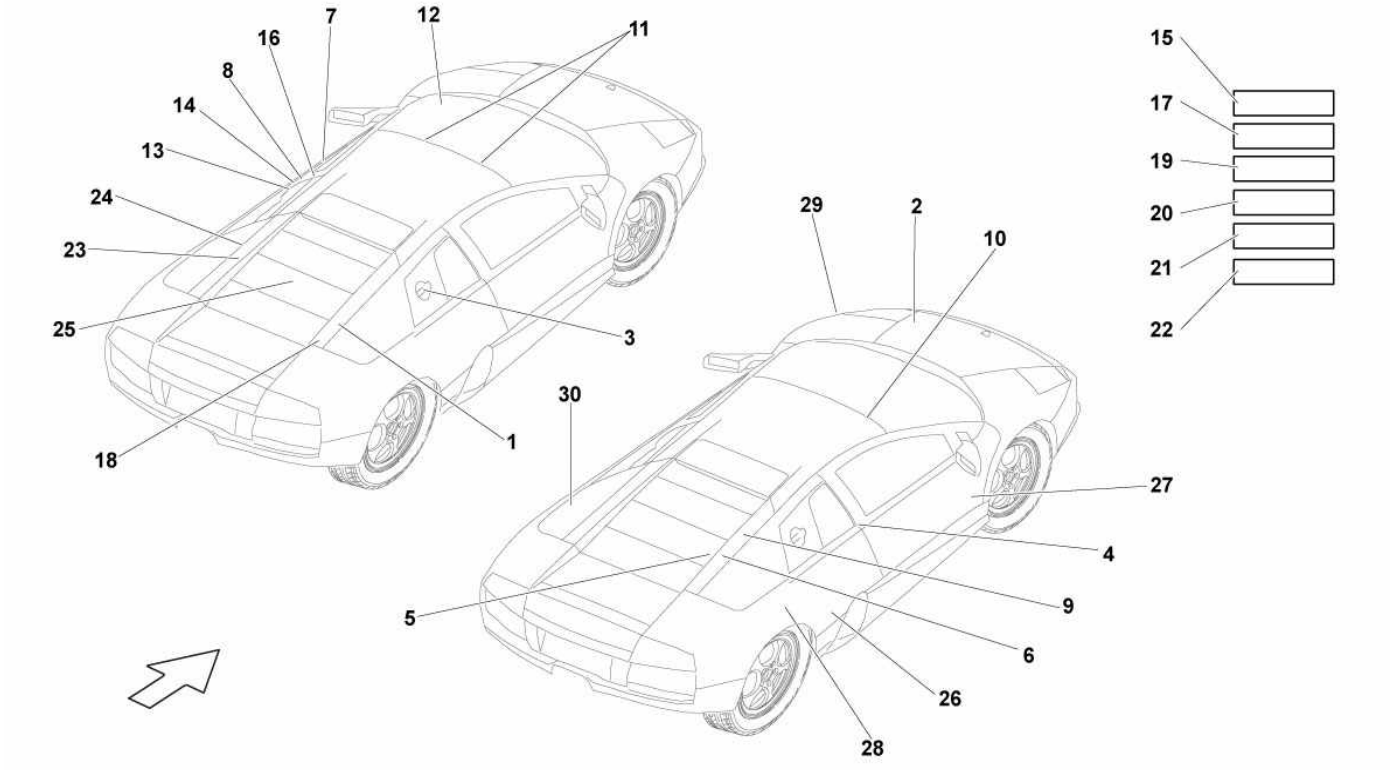

Ref.	Code	Q.ty	Description
1	410010528F	1	NAMEPLATE GIVEN MOTOR REGULATION
2	400010522	1	LIQUID BRAKES NAMEPLATE (CINA)
2	400010366M	1	LIQUID BRAKES NAMEPLATE
3	400010377T	1	NAMEPLATE BENZINE WITHOUT LEAD
6			NAMEPLATE EMPTY CIRCUIT (VALID UP TO MODEL YEAR 08)
7	410010546B	1	NAMEPLATE TIRES
8	400000297B	1	VIN NAMEPLATE (SEE IDENTITY PLATE PROCEDURE)
9			LUBRICANT STICKER (VALID UP TO MODEL YEAR 07)
10	400010367G	2	AIR BAG NAMEPLATE
11	400010367C	2	AIR BAG NAMEPLATE
12	410010531B	1	NAMEPLATE IDENTIFICATION CHASSIS (SEE IDENTITY PLATE PROCEDURE)
13	410010525H	1	CONSTRUCTOR NAMEPLATE
14	400010377N	1	FILM
15	418010503B	1	NAMEPLATE FUSES BOX (MAIN)
16	410010530	1	MERCURY STICKER
17	410010518B	1	INJECTION RELAIS BOX NAMEPLATE
18			USA SMOG INDEX PLATE (VALID UP TO MODEL YEAR 09)
19	410010503B	1	LIE WIRING RELAY NAMEPLATE
20	410010503A	1	E-GEAR RELAY NAMEPLATE
21	410010519A	1	LIGHT PUSH BUTTON PANEL RELAY BOX NAMEPLATE
22			FUEL ECONOMY NAMEPLATE (CANNOT BE SOLD SEPARATELY)
23	07M115562B	1	OIL LEVEL STICKER
24			NAMEPLATE BATTERY (VALID FOR A MARKET CHINESE)
25	410010542	1	NAMEPLATE - 4 WHEEL DRIVE
26	429854499	2	REAR LP670_4 DECORATION
27	429853711	2	SV - BLACK DECORATIVE ADHESIVE
27	429853711A	2	SV - WHITE DECORATIVE ADHESIVE

Model : Spare Parts MURCIELAGO SV LP 670-4 Market: USA MY 2010

Group : 010-NAMEPLATES

Table : 010.01.00-NAMEPLATES

Ref.	Code	Q.ty	Description
28	429853712	2	SV - BLACK DECORATIVE ADHESIVE
28	429853712A	2	SV - WHITE DECORATIVE ADHESIVE
29			LP 650-4 - DECORATIVE ADHESIVE (FOR LP 650-4 MODEL)
30			LP 650-4 - DECORATIVE ADHESIVE (FOR LP 650-4 MODEL)

Model : Spare Parts MURCIELAGO SV LP 670-4 Market: USA MY 2010

Group : 103-ENGINE

Table : 103.07.00-OIL SUMP

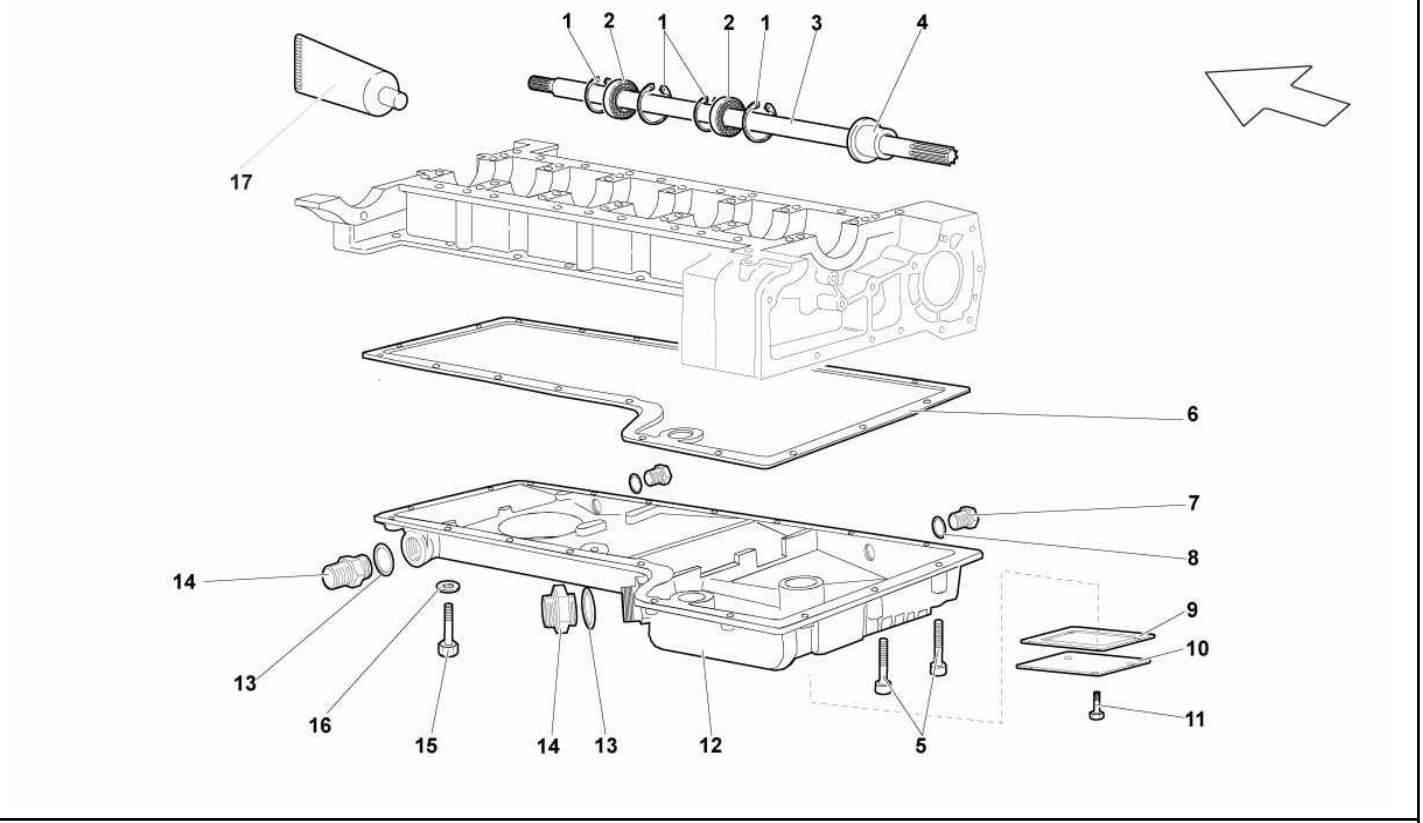

Ref.	Code	Q.ty	Description
1	N 0122861	2	RETAINING RING
2	410103520	1	BEARING
3	410521311	1	PROPELLER SHAFT
4	07M103498	1	PLUG
5	N 10554005	2	SCREW M6X35
6	07M103609	1	GASKET
7	N 91155901	2	PLUG
8	N 0138481	2	WASHER
9	07M103610	1	GASKET
10	07M103525	1	COVER
11	WHT002957	4	SCREW 5X12
12	07M103601	1	ENGINE OIL PAN
13	WHT000674	2	WASHER
14	400115707	2	CONNECTOR
15	N 91071701	17	SCREW M6X25
16	WHT001197A	19	WASHER
17	900000130	1	GREASE

Model : Spare Parts MURCIELAGO SV LP 670-4 Market: USA MY 2010

Group : 117-OIL SYSTEM RADIATOR

Table : 117.01.71-OIL SYSTEM RADIATOR

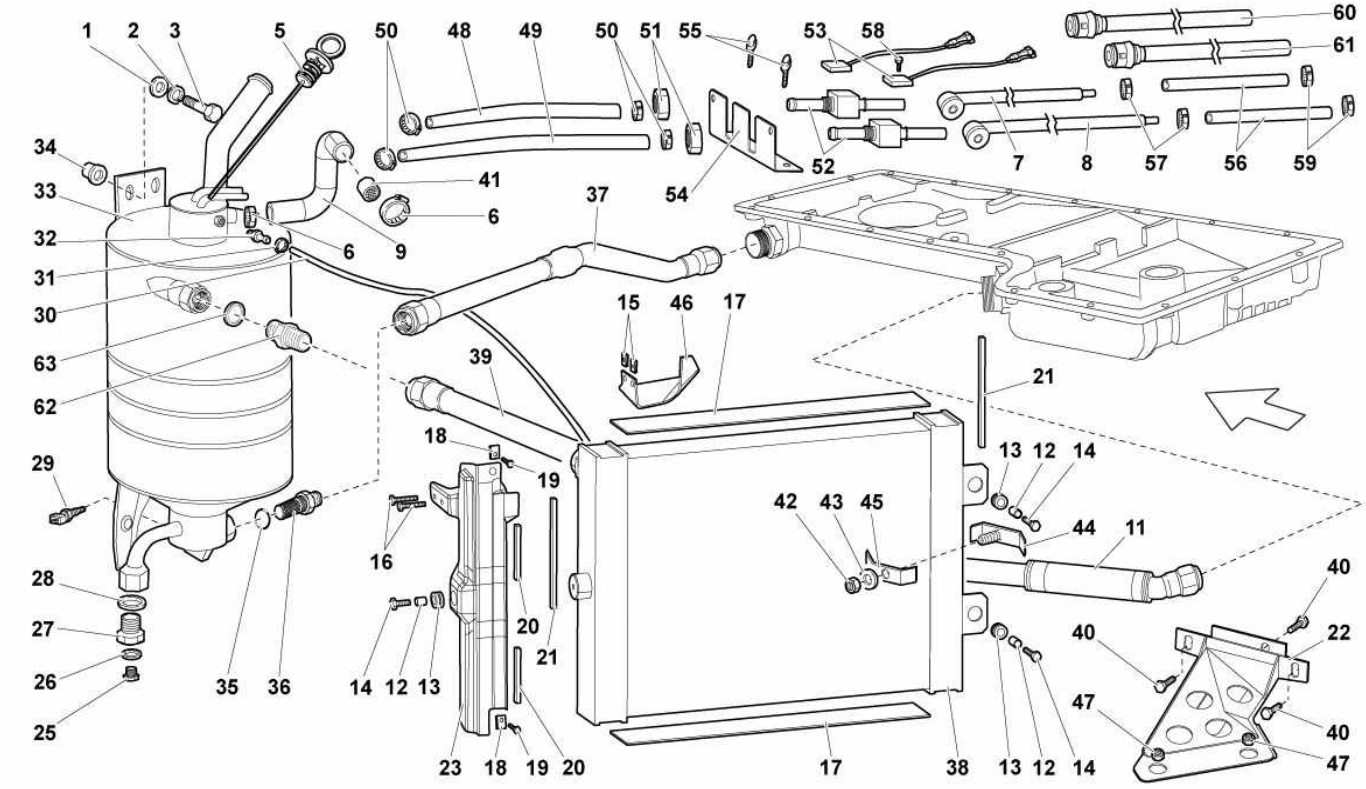

Ref.	Code	Q.ty	Description
1	N 90840802	3	WASHER
2	N 0152785	3	WASHER
3	N 10545402	3	SCREW M8X25
5	07M115311D	1	PLUG
6	N 90442501	2	CLAMP
7			PIPE (CANNOT BE SOLD SEPARATELY - SEE REF. 60)
8			PIPE (CANNOT BE SOLD SEPARATELY - SEE REF. 61)
9	07M115657A	1	PIPE
11	07M117413B	1	PIPE
12	400121129	3	BUSHING
13	07L121585	3	FAIRLEAD
14	N 90533003	3	SCREW M6X20
15	N 0154522	2	CLIP
16	N 90986803	2	SCREW
17	07M117025	2	GASKET
18	400827947	2	CLIP
19	N 10718801	2	SCREW M6X16
20	410853669	2	GASKET
21	07M117070	2	GASKET
22	410117095A	1	BRACKET
23	410853343	1	BRACKET
25	N 0297042	1	PLUG
26	N 91122801	1	WASHER
27	07M115707A	1	CONNECTOR
28	WHT003050	1	WASHER
29	07L919501A	1	CA.0005430.C TEMPERATURE SENSOR
30	07M115655	1	PIPE
31	N 91054301	2	CLAMP

Model : Spare Parts MURCIELAGO SV LP 670-4 Market: USA MY 2010

Group : 117-OIL SYSTEM RADIATOR

Table : 117.01.71-OIL SYSTEM RADIATOR

Ref.	Code	Q.ty	Description
32	07M115458	1	CONNECTOR
33	07M115373	1	OIL TANK
34	410814939	3	BUSHING
35	WHT003309	1	WASHER
36	07M115157	1	CONNECTOR
37	07M115688A	1	PIPE
38	07M117021A	1	OIL RADIATOR
39	07M115689A	1	PIPE
40	N 10005207	3	SCREW M8X18
41	07L129793	1	FLAME TRAP
42	N 01118312	1	NUT
43	WHT003407	1	WASHER
44	07M115633A	1	BRACKET
45	07M115634A	1	BRACKET
46	410853595	1	BRACKET
47	WHT003112	2	NUT
48	07M115309	1	PIPE (RIGHT CYLINDER HEAD)
49	07M115310	1	PIPE (LEFT CYLINDER HEAD)
50	N 10233401	4	CLAMP
51	WHT003023	2	NUT
52	07L115157	2	CONNECTOR
53	07L907457	2	MICROSWITCH
54	07M115261	1	BRACKET
55	N 10653201	2	SCREW M6X16
56			PIPE (CANNOT BE SOLD SEPARATELY)
57			CLAMP (CANNOT BE SOLD SEPARATELY)
58	WHT000937	4	SCREW
59	N 10233401	2	CLAMP
60	07M115664A	1	PIPE (RIGHT CYLINDER HEAD)
61	07M115663A	1	PIPE (LEFT CYLINDER HEAD)
62	400115707	1	CONNECTOR
63	WHT000674	1	WASHER

Model : Spare Parts MURCIELAGO SV LP 670-4 Market: USA MY 2010

Group : 863-PASSENGER COMPARTMENT TRIMS

Table : 863.10.00-PASSENGER COMPARTMENT TRIMS

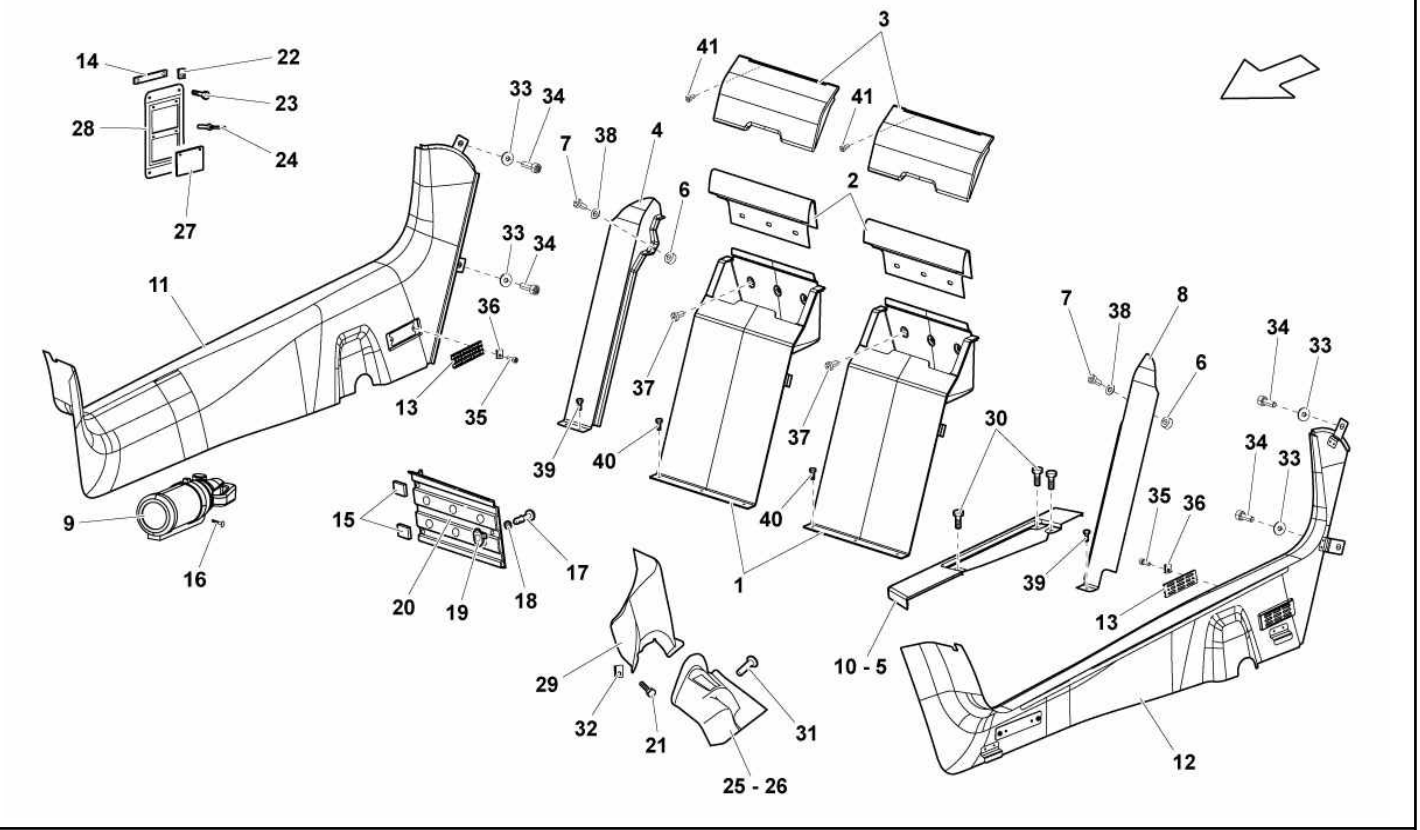

Ref.	Code	Q.ty	Description
1	418861461B	2	GLOVE BOX (ALCANTARA UPHOLSTERY - SUPPLY VIN)
2	429857211	2	TRIM (WITH 4 POINTS STICHING - ALCANTARA UPHOLSTERY - SUPPLY VIN)
3	418868011B	2	COVER (WITH 3 POINTS STICHING - ALCANTARA UPHOLSTERY - SUPPLY VIN)
4	418867478D	1	RIGHT LOWER REAR ANGULAR COVERING ASSEMBLY (ALCANTARA UPHOLSTERY - SUPPLY VIN)
6	400804347	2	SPACER PLATE
7	WHT001190	2	SCREW M5X12
8	418867477D	1	LEFT LOWER REAR ANGULAR COVERING ASSEMBLY (ALCANTARA UPHOLSTERY - SUPPLY VIN)
9	403860283	1	FIRE EXTINGUISHER
10	418711461B	1	COVERING (ALCANTARA UPHOLSTERY - SUPPLY VIN)
11	429854888	1	RIGHT SIDE MEMBER COVER ASSEMBLY (ALCANTARA UPHOLSTERY - SUPPLY VIN)
12	429854887	1	LEFT SIDE MEMBER COVER ASSEMBLY (ALCANTARA UPHOLSTERY - SUPPLY VIN)
13	400867397	2	GRID
14	418867267	4	PLATE
15	410863939	4	INSULATING MATERIAL
16	N 10596302	2	SCREW M5X25.0
17	400864519A	3	JOURNAL
18	400864179A	3	RUBBER RING
19	400864994	3	CLIP
20	413864420	1	PLATE
21			SCREW (FOR GDX CARS)
22	N 0154487	8	CLIP
23	N 10656602	8	SCREW

Model : Spare Parts MURCIELAGO SV LP 670-4 Market: USA MY 2010

Group : 863-PASSENGER COMPARTMENT TRIMS

Table : 863.10.00-PASSENGER COMPARTMENT TRIMS

Ref.	Code	Q.ty	Description
24	410806225	8	RIVET
25	413721585A	1	ACCELERATOR COVER BOX
26			ACCELERATOR COVER BOX (FOR GDX CARS)
27	418867096	4	BULKHEAD
28	418867397	2	ORNAMENT
29			COVERING (FOR GDX CARS)
30	N 10406504	3	SCREW M6X12.0
31	N 91153701	5	RIVET
32			CLIP (FOR GDX CARS)
33	N 91109201	4	WASHER
34	N 10648502	4	SCREW M5X10
35	WHT003102	4	SCREW
36	WHT003424	4	CLIP
37	WHT001190	6	SCREW M5X12
38	WHT003040	2	WASHER
39	WHT003065	3	SCREW ST2.9X16
40	WHT003065	6	SCREW ST2.9X16
41	WHT003114	8	SCREW

Model : Spare Parts MURCIELAGO SV LP 670-4 Market: USA MY 2010

Group : 723-E-GEAR CONTROL PEDAL

Table : 723.01.00-E-GEAR CONTROL PEDAL

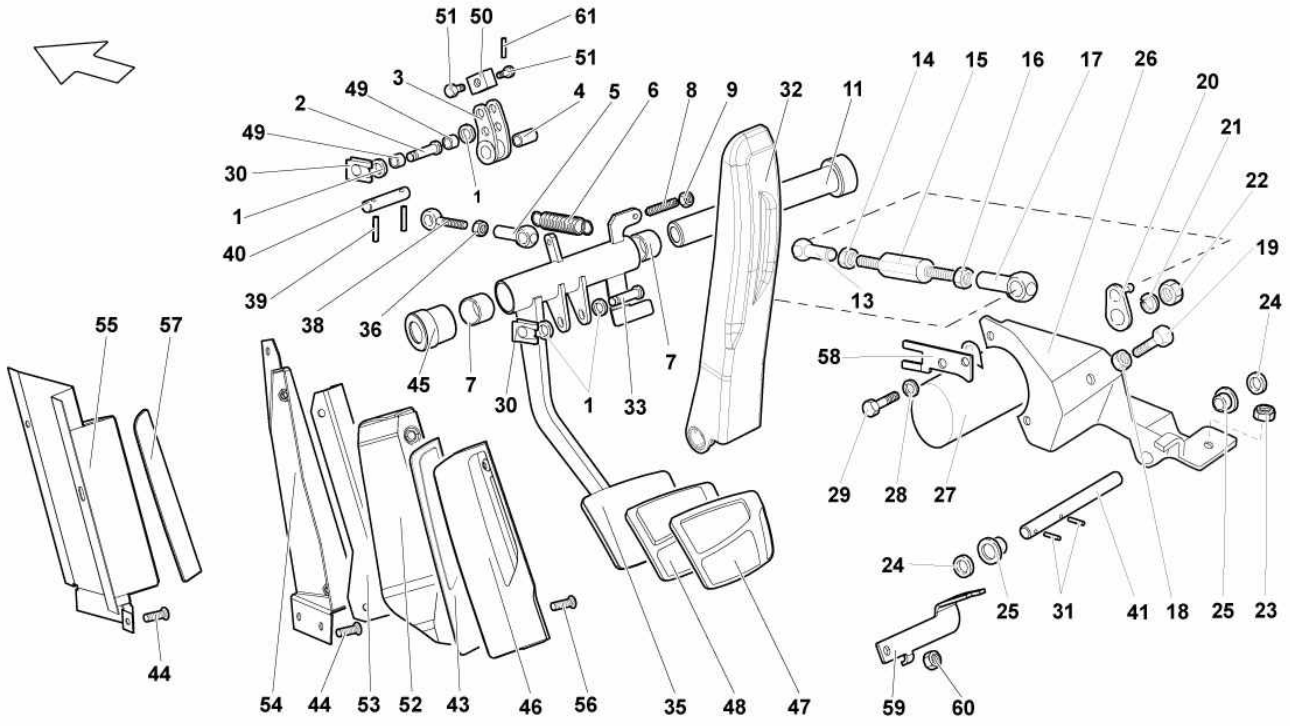

Ref.	Code	Q.ty	Description
1	N 01152722	4	WASHER 10,5X21X2
2	410721966	1	JOURNAL
3	410721385	1	LEVER
4	410721164A	1	BUSHING
5	410721993	1	BALL JOINT COUPLING
6	410721363	1	SPRING
7	410721443	2	BUSHING
8	410721671	1	ADJUSTING SLEEVE
9	N 01100637	1	NUT M6
11	413721325A	1	JOURNAL
13	400721214E	1	BALL JOINT HEAD (LEFT HAND THREAD)
14	N 10690001	1	NUT (LEFT HAND THREAD)
15	400721743A	1	SHAFT
16	N 10689901	1	NUT M5
17	400721214D	1	BALL JOINT HEAD
18	N 01100845	1	NUT M8X1,25X6,5
19	N 01033520	1	SCREW M8X35
20	400721728C	1	LEVER
21			WASHER 6X12X1 (VALID FOR A MODEL YEAR 07)
22	N 02300212	1	NUT M6
23	N 10609202	2	NUT M8
24	WHT000697	2	WASHER 13X22X0,3
25	410721543	2	BUSHING
26	400721651A	1	SUPPORT
27	400907475A	1	POTENTIOMETER
28	N 0115578	2	WASHER 6X12X1
29	N 10546402	2	SCREW M6X16
30	N 0126483	2	CLIP

Model : Spare Parts MURCIELAGO SV LP 670-4 Market: USA MY 2010

Group : 723-E-GEAR CONTROL PEDAL

Table : 723.01.00-E-GEAR CONTROL PEDAL

Ref.	Code	Q.ty	Description
31	N 10206801	2	PIN
32	400721507A	1	ACCELERATOR PEDAL
33	410721147	1	JOURNAL
35	413721145C	1	BRAKE PEDAL
36	N 10155210	1	NUT M10
38	410721645	1	TIE ROD
39	N 0133481	2	PIN
40	410721965	1	JOURNAL
41	400721157	1	JOURNAL
43	401864431	1	RUBBER FOOT MAT
44	N 90780901	3	SCREW M6X16.0
45	410723167	1	SPACER
46	401864419B	1	FOOTREST DRIVER SIDE
47	400721780A	1	COVER
48	400721174D	1	COVER
49	410721134A	2	BUSHING
50	410721255	1	BLOCK
51	410721379	2	SCREW
52	401864431B	1	COVER
53	401864523A	1	SUPPORT
54	413864775B	1	BRACKET
55			FOOTREST DRIVER SIDE (FOR RHD VERSIONS)
56	N 10713901	2	SCREW M6X50
57			SHIM (FOR RHD VERSIONS)
58	410971806	1	SUPPORT
59			SUPPORT (FOR RHD VERSIONS)
60			NUT M6 (FOR RHD VERSIONS)
61	N 0133311	2	PIN 2.0X12.0

Model : Spare Parts MURCIELAGO SV LP 670-4 Market: USA MY 2010

Group : 721-MANUAL PEDAL CLUSTER

Table : 721.01.00-MANUAL PEDAL CLUSTER

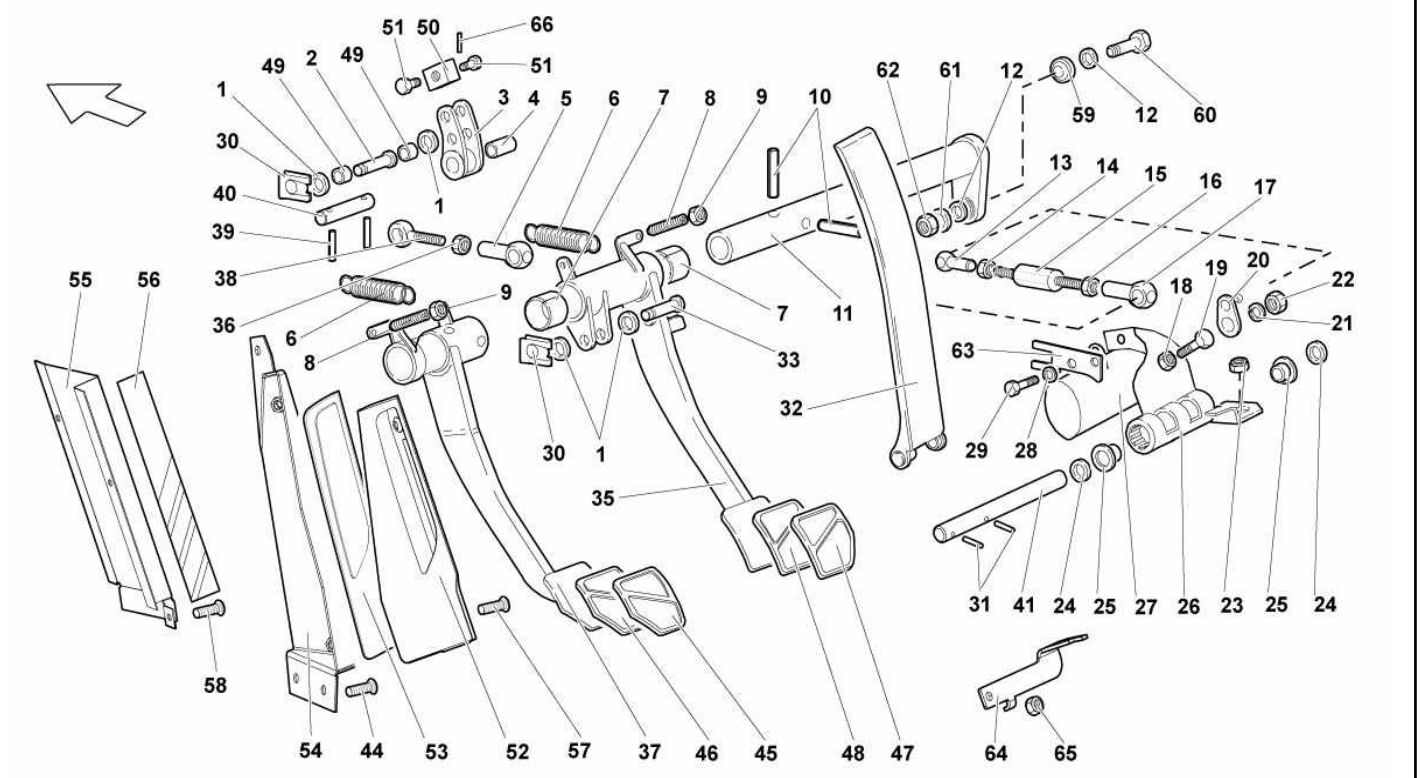

Ref.	Code	Q.ty	Description
1	N 01152722	4	WASHER 10,5X21X2
2	410721966	1	JOURNAL
3	410721385	1	LEVER
4	410721164A	1	BUSHING
5	410721993	1	BALL JOINT COUPLING
6	410721363	2	SPRING
7	410721443	2	BUSHING
8	410721671	2	ADJUSTING SLEEVE
9	N 01100637	2	NUT M6
10	WHT003109	2	PIN
11	413721325	1	JOURNAL
12	WHT002631	2	WASHER 8X12X1
13	400721214E	1	BALL JOINT HEAD (LEFT HAND THREAD)
14	N 10690001	1	NUT (LEFT HAND THREAD)
15	400721743A	1	SHAFT
16	N 10689901	1	NUT M5
17	400721214D	1	BALL JOINT HEAD
18	N 01100845	1	NUT M8X1,25X6,5
19	N 01033520	1	SCREW M8X35
20	400721728C	1	LEVER
21			WASHER 6X12X1 (VALID FOR A MODEL YEAR 07)
22	N 02300212	1	NUT M6X1X6
23	N 10609202	2	NUT M8
24	WHT000697	2	WASHER 13X22X0,3
25	410721543	2	BUSHING
26	400721651A	1	SUPPORT
27	400907475A	1	POTENTIOMETER
28	N 0115578	2	WASHER 6X12X1

Model : Spare Parts MURCIELAGO SV LP 670-4 Market: USA MY 2010

Group : 721-MANUAL PEDAL CLUSTER

Table : 721.01.00-MANUAL PEDAL CLUSTER

Ref.	Code	Q.ty	Description
29	N 10546402	2	SCREW M6X16
30	N 0126483	2	CLIP
31	N 10206801	2	PIN
32	400721507A	1	ACCELERATOR PEDAL
33	410721147	1	JOURNAL
35	413721145B	1	BRAKE PEDAL
36	N 10155210	1	NUT M10
37	413721321B	1	CLUTCH PEDAL
38	410721645	1	TIE ROD
39	N 0133481	2	PIN
40	410721965	1	JOURNAL
41	400721157	1	JOURNAL
44	N 90780901	3	SCREW M6X16
45	400721779	1	COVER
46	400721173	1	COVER
47		1	COVER
48	400721174C	1	COVER
49	410721134A	2	BUSHING
50	410721255	1	BLOCK
51	410721379	2	SCREW
52	413864419	1	FOOTREST DRIVER SIDE
53	401864431	1	COVER
54	413864775B	1	BRACKET
55			FOOTREST DRIVER SIDE (FOR RHD VERSIONS)
56			COVER (FOR RHD VERSIONS)
57	WHT003068	2	SCREW M6X16
58			SCREW (FOR RHD VERSIONS)
59	410721427	1	BALL JOINT
60	WHT003270	1	JOURNAL
61	N 90179103	1	WASHER 18X8,4X2,5
62	N 01118410	1	NUT M8
63	410971806	1	SUPPORT
64			SUPPORT (FOR RHD VERSIONS)
65			NUT M6 (FOR RHD VERSIONS)
66	N 0133311	2	PIN 2.0X12.0

Model : Spare Parts MURCIELAGO SV LP 670-4 Market: USA MY 2010

Group : 611-BRAKE SYSTEM

Table : 611.03.00-PEDAL SUPPORT

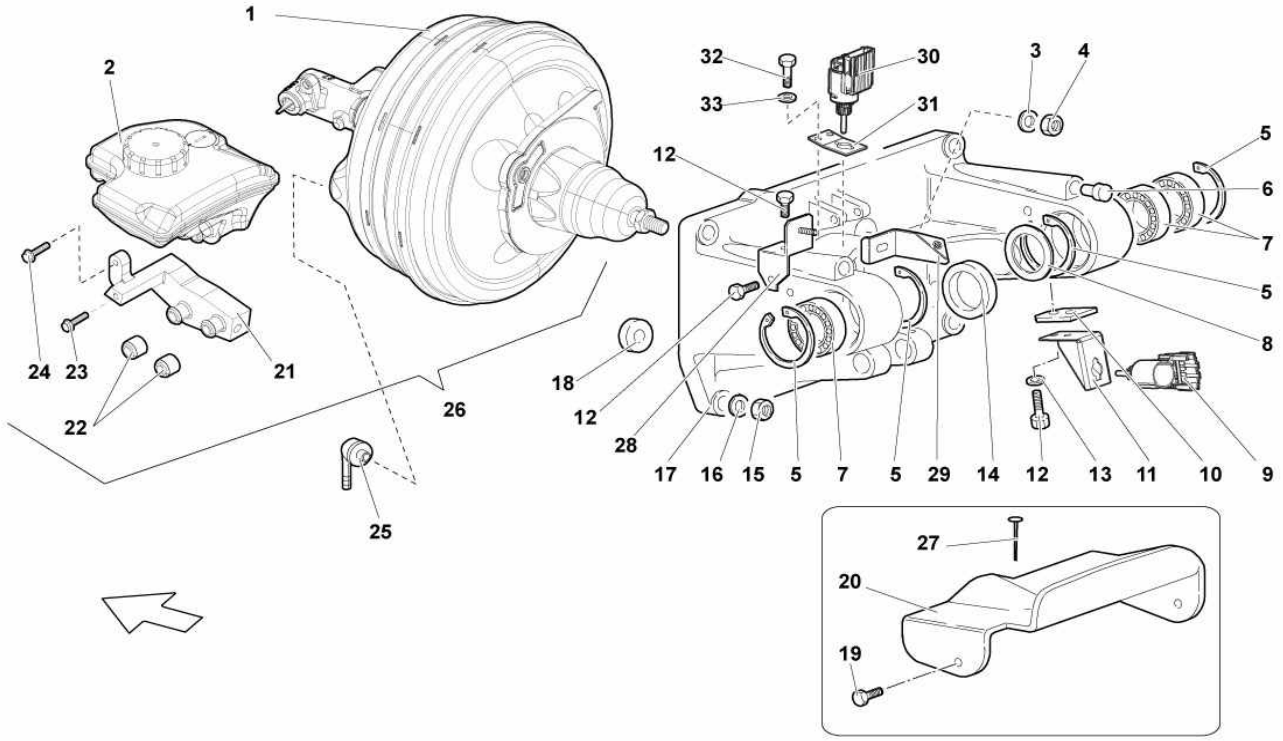

Ref.	Code	Q.ty	Description
1			POWER BRAKE (CANNOT BE SOLD SEPARATELY - SEE REF. 26)
2	3D0611301B	1	POWER BRAKE TANK
3	N 90179103	4	WASHER 18X8,4X2,5
4	N 01118410	4	NUT M8
5	WHT002647	4	RETAINING RING
6	410721381	2	STOP
7	410721196	3	BEARING
8	WHT002632	1	WASHER
9	1K2945511	1	SWITCH (WARNING USE ALSO 410721633B)
10	413721663A	1	SPACER
11	410721633B	1	SUPPORT (WARNING USE ALSO 1K2945511)
12	N 10650701	3	SCREW M6X12
13	N 01152427	2	WASHER 6.40X12.5X1.60
14	410721648	1	SPACER
15	N 01118410	4	NUT M8
16	N 90179103	4	WASHER 18X8,4X2,5
17	413721117A	1	PEDALS SUPPORT
18	410721134A	4	SPACER
19	N 10650701	2	SCREW M6X12
20	413864777	1	COVER
21		1	SUPPORT (CANNOT BE SOLD SEPARATELY - SEE REF. 26)
22	4A0611817A	2	GASKET
23	N 90533005	1	SCREW M6X20
24	N 91051101	1	SCREW M6X30
25	400616807	1	CHECK VALVE
26	400612100B	1	POWER BRAKE (COMPLETE)
27			RIVET (FOR RHD VERSIONS)
28			BRACKET (FOR RHD VERSIONS)

Model : Spare Parts MURCIELAGO SV LP 670-4 Market: USA MY 2010

Group : 611-BRAKE SYSTEM

Table : 611.03.00-PEDAL SUPPORT

Ref.	Code	Q.ty	Description
29			BRACKET (FOR RHD VERSIONS)
30			SWITCH (VALID FOR A MARKET CANADA)
31			SUPPORT (VALID FOR A MARKET CANADA)
32			SCREW M6X16 (VALID FOR A MARKET CANADA)
33			WASHER 6.40X12.5X1.60 (VALID FOR A MARKET CANADA)

Model : Spare Parts MURCIELAGO SV LP 670-4 Market: USA MY 2010

Group : 103-ENGINE

Table : 103.02.00-PHASE SENSORS LEFT CYLINDER HEAD

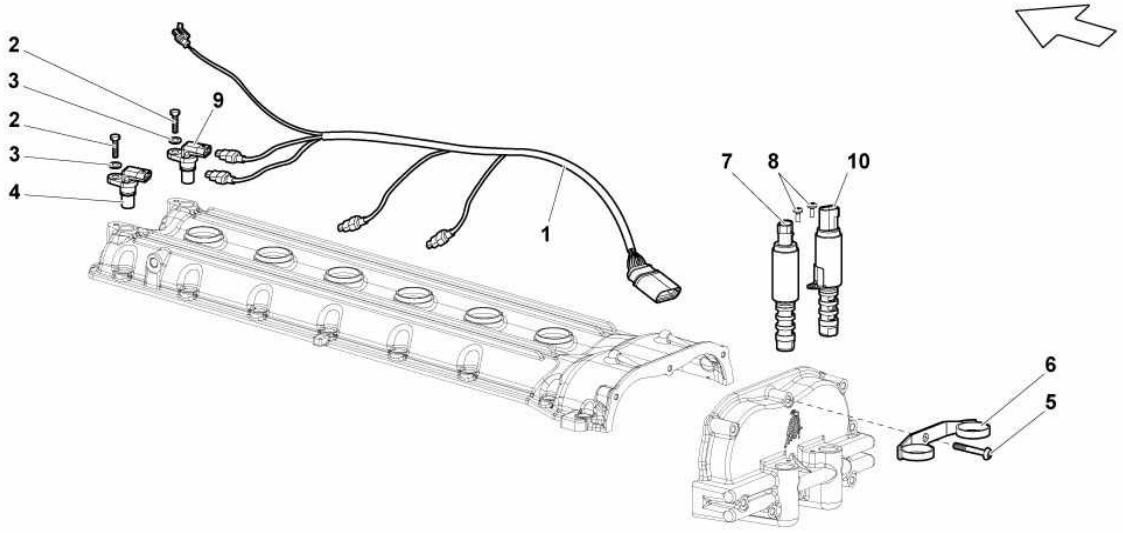

Ref.	Code	Q.ty	Description
1			WIRING HARNESS (SEE TABLE 103.01.00 - 5)
2	N 91084801	2	SCREW M6X18
3	WHT001197A	2	WASHER
4	07L905163A	1	TIMING SENSOR (FROM ENGINE 02232)
5	N 10582103	1	SCREW M6X40.0
6	07M109133A	1	BRACKET
7	06E109257J	1	SOLENOID VALVE ASSEMBLY
8	N 91068201	2	SCREW M4X10
9	07L905163A	1	TIMING SENSOR (FROM ENGINE 02232)
10	06E109257J	1	SOLENOID VALVE ASSEMBLY

Model : Spare Parts MURCIELAGO SV LP 670-4 Market: USA MY 2010

Group : 103-ENGINE

Table : 103.01.00-PHASE SENSORS RIGHT CYLINDER HEAD

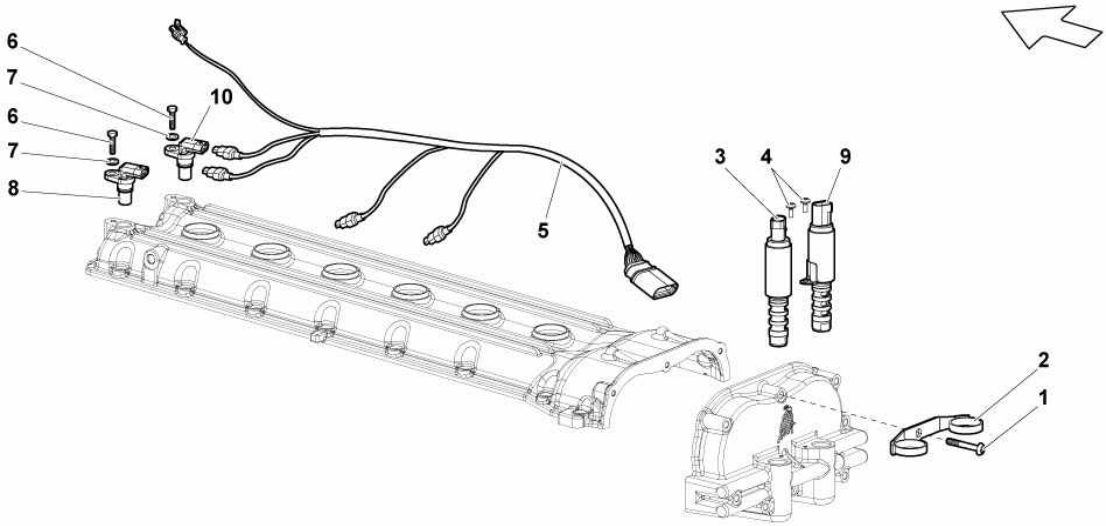

Ref.	Code	Q.ty	Description
1	N 10582103	1	SCREW M6X40.0
2	07M109133A	1	BRACKET
3	06E109257J	1	SOLENOID VALVE ASSEMBLY
4	N 91068201	2	SCREW M4X10
5			WIRING HARNESS (VALID UP TO MODEL YEAR 08)
6	N 91084801	2	SCREW M6X18
7	WHT001197A	2	WASHER
8	07L905163A	1	TIMING SENSOR (FROM ENGINE 02232)
9	06E109257J	1	SOLENOID VALVE ASSEMBLY
10	07L905163A	1	TIMING SENSOR (FROM ENGINE 02232)

Model : Spare Parts MURCIELAGO SV LP 670-4 Market: USA MY 2010

Group : 107-PISTONS

Table : 107.01.00-PISTONS

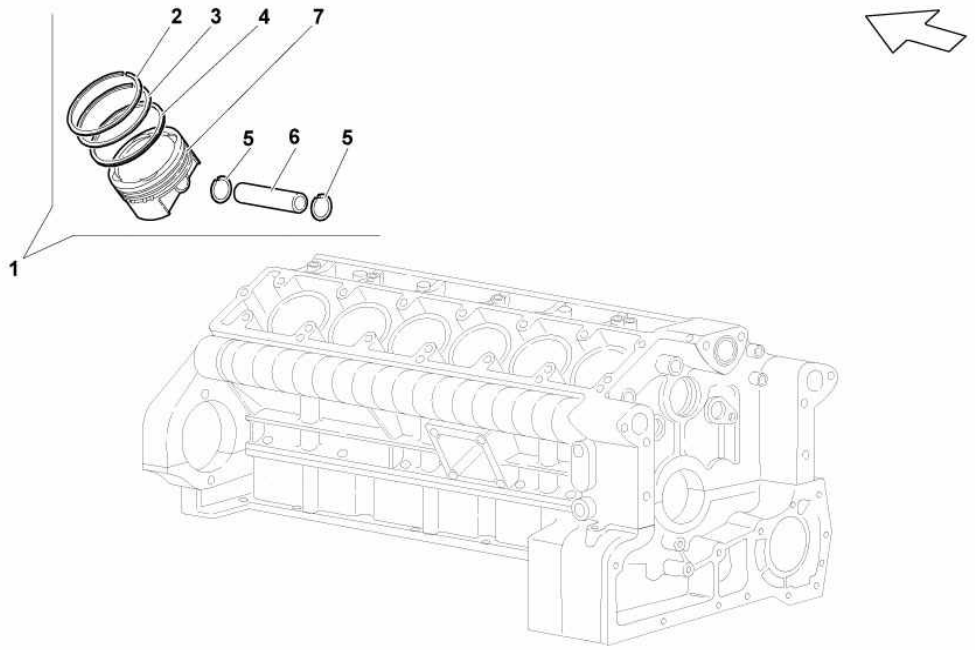

Ref.	Code	Q.ty	Description
1	07M107075C	12	COMPLETE PISTON
2	07M107311B	12	PISTON RING
3	07M107313A	12	PISTON RING
4	07M107321B	12	PISTON RING
5	07M107393	24	RETAINING RING
6	07M107397	12	PISTON PIN
7	07M107113C	12	PISTON

Model : Spare Parts MURCIELAGO SV LP 670-4 Market: USA MY 2010

Group : 422-POWER STEERING

Table : 422.01.00-POWER STEERING

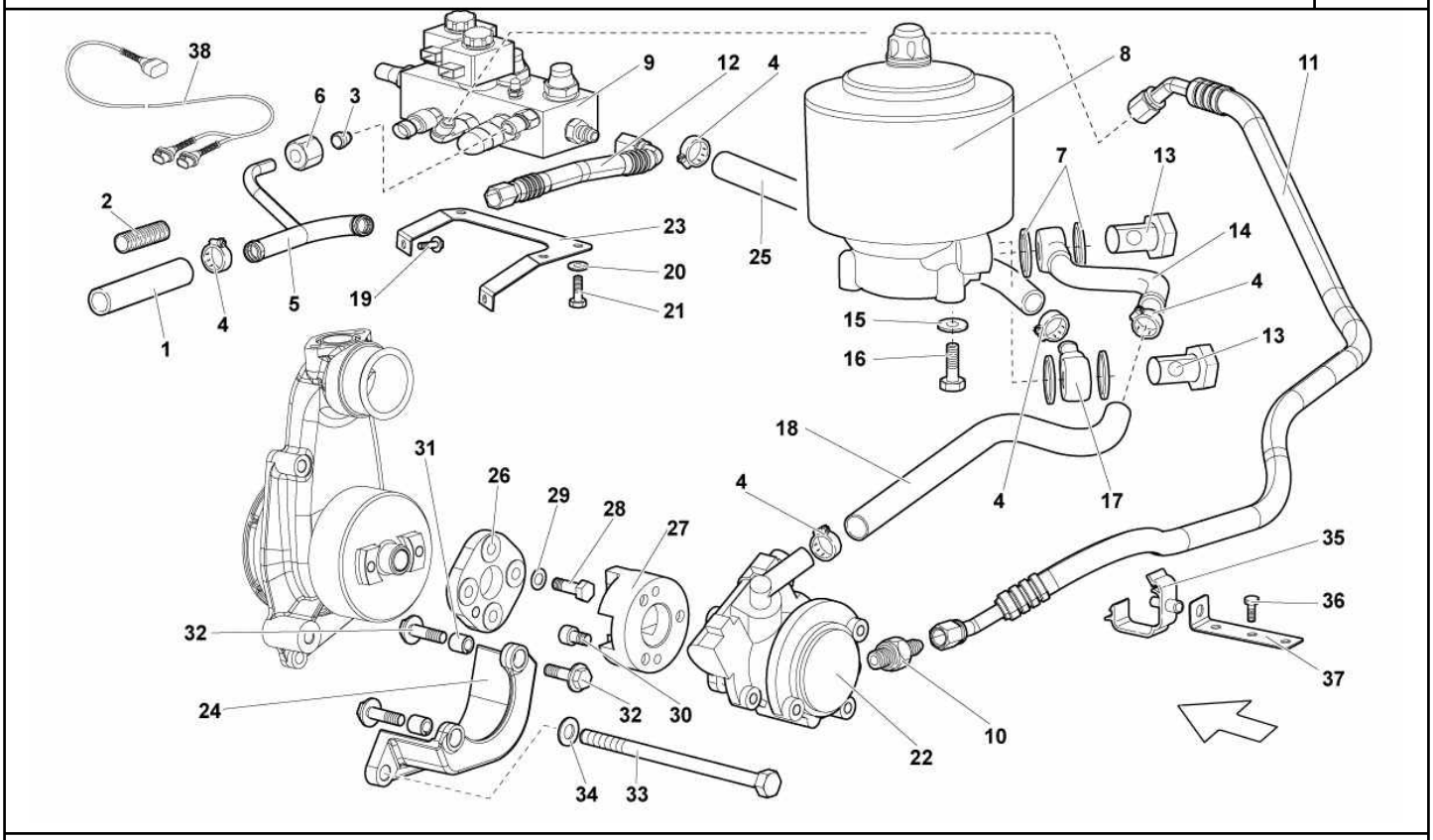

Ref.	Code	Q.ty	Description
1	410422890B	1	PIPE
2	410201212	1	SPRIMG
3	410616335	1	BUSH
4	400251189D	6	CLAMP
5	410422237A	1	PIPE
6	WHT003120	1	NUT
7	400422383A	4	WASHER
8	400422373	1	TANK
9	410412185D	1	JACKING SYSTEM CONTROL UNIT
10	410422279	1	CONNECTOR
11	410422893B	1	HOSE
12	410422471B	1	HOSE
13	400422269	2	SCREW WITH HOLE
14	410422859B	1	CONNECTOR
15	WHT001397	3	WASHER
16	N 01029315	3	SCREW M8X16
17	400422859A	1	CONNECTOR
18	410422891B	1	PIPE
19	N 90532901	2	SCREW M6X16
20	N 01152427	3	WASHER
21	N 01021224	3	SCREW M6X12
22	410145156A	1	OIL PUMP
23		1	BRACKET
24	410145879A	1	BRACKET
25	410422890A	1	PIPE
26	07M145897	1	SPACER
27	410145432A	1	SPACER
28	N 01024232	4	SCREW M8X25

Model : Spare Parts MURCIELAGO SV LP 670-4 Market: USA MY 2010

Group : 422-POWER STEERING

Table : 422.01.00-POWER STEERING

Ref.	Code	Q.ty	Description
29	WHT000771	4	WASHER
30	N 90903902	3	SCREW M8X14
31	410145219A	2	BUSHING
32	N 90994402	4	SCREW M8X30
33	07M145786	1	SCREW
34	N 0115609	1	WASHER
35	400121227	1	CLAMP
36	N 90319404	1	SCREW M6X12
37	410971789A	1	BRACKET
38	410971059	1	WIRING HARNESS

Model : Spare Parts MURCIELAGO SV LP 670-4 Market: USA MY 2010

Group : 521-PROPELLER SHAFT

Table : 521.01.00-PROPELLER SHAFT

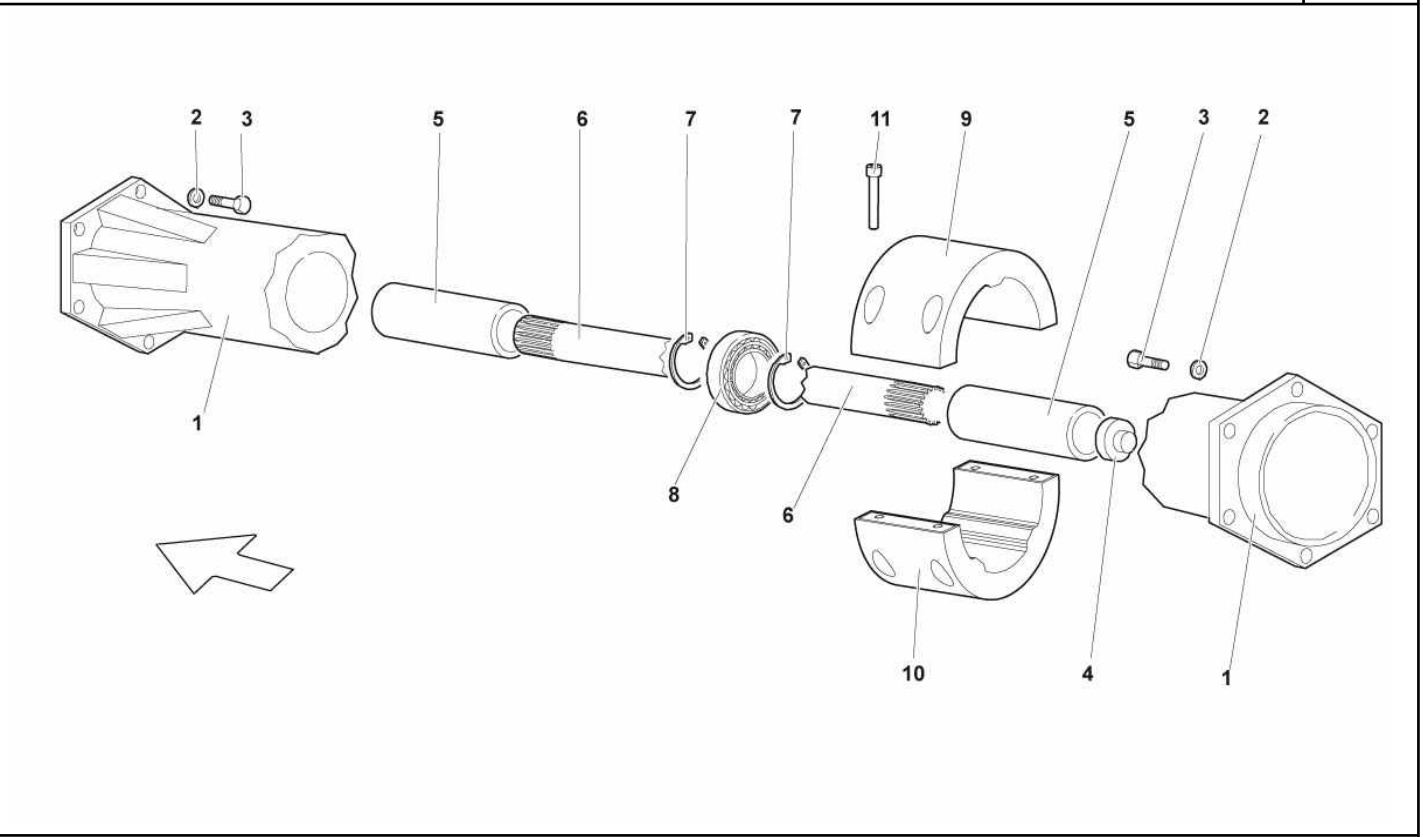

Ref.	Code	Q.ty	Description
1	410521136A	1	PROPELLER SHAFT PROTECTION
2	086311519	10	WASHER
3	N 10517304	10	SCREW M8X22
4	410521325	1	RUBBER BUFFER
5	410521177	1	SLEEVE
6	410521221	1	PROPELLER SHAFT
7	N 0123751	1	RETAINING RING
8	410521379	1	BEARING
9	410521303	1	SILENTBLOC - UPPER
10	410521309	1	SILENTBLOC - LOWER
11	N 10347404	4	SCREW M6X35

Model : Spare Parts MURCIELAGO SV LP 670-4 Market: USA MY 2010

Group : 121-WATER COOLING SYSTEM

Table : 121.03.00-WATER COOLING SYSTEM

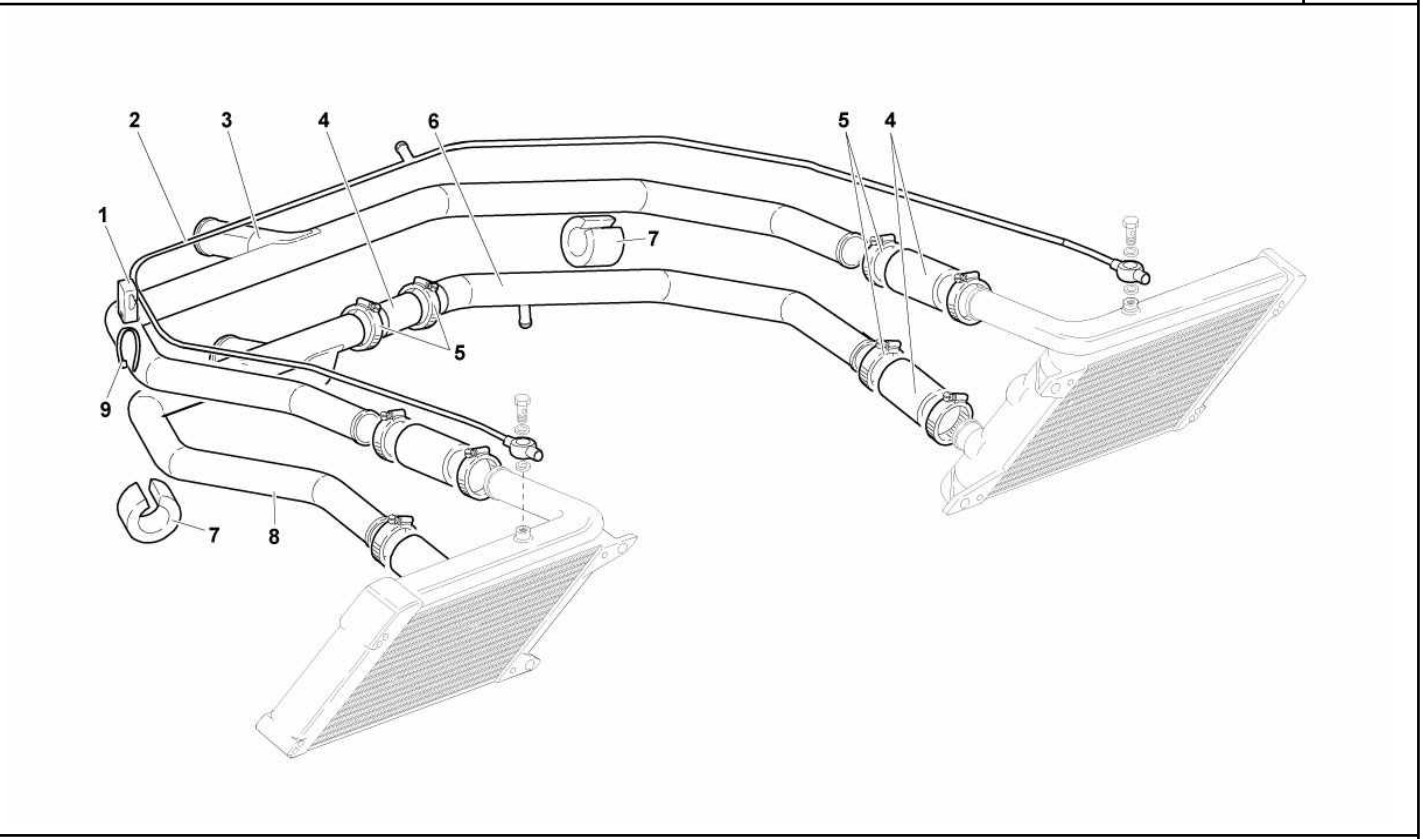

Ref.	Code	Q.ty	Description
1	400611799	6	CLIP
2	07M121434	1	PIPE
3	07M121107	1	PIPE
4	07M121074	5	PIPE
5	N 91115301	8	CLAMP
6	07M121102	1	PIPE
7	07L121199	2	PROTECTION
8	07M121103	1	PIPE
9	008830303	3	CLAMP

Model : Spare Parts MURCIELAGO SV LP 670-4 Market: USA MY 2010

Group : 121-WATER COOLING SYSTEM

Table : 121.04.00-WATER COOLING SYSTEM

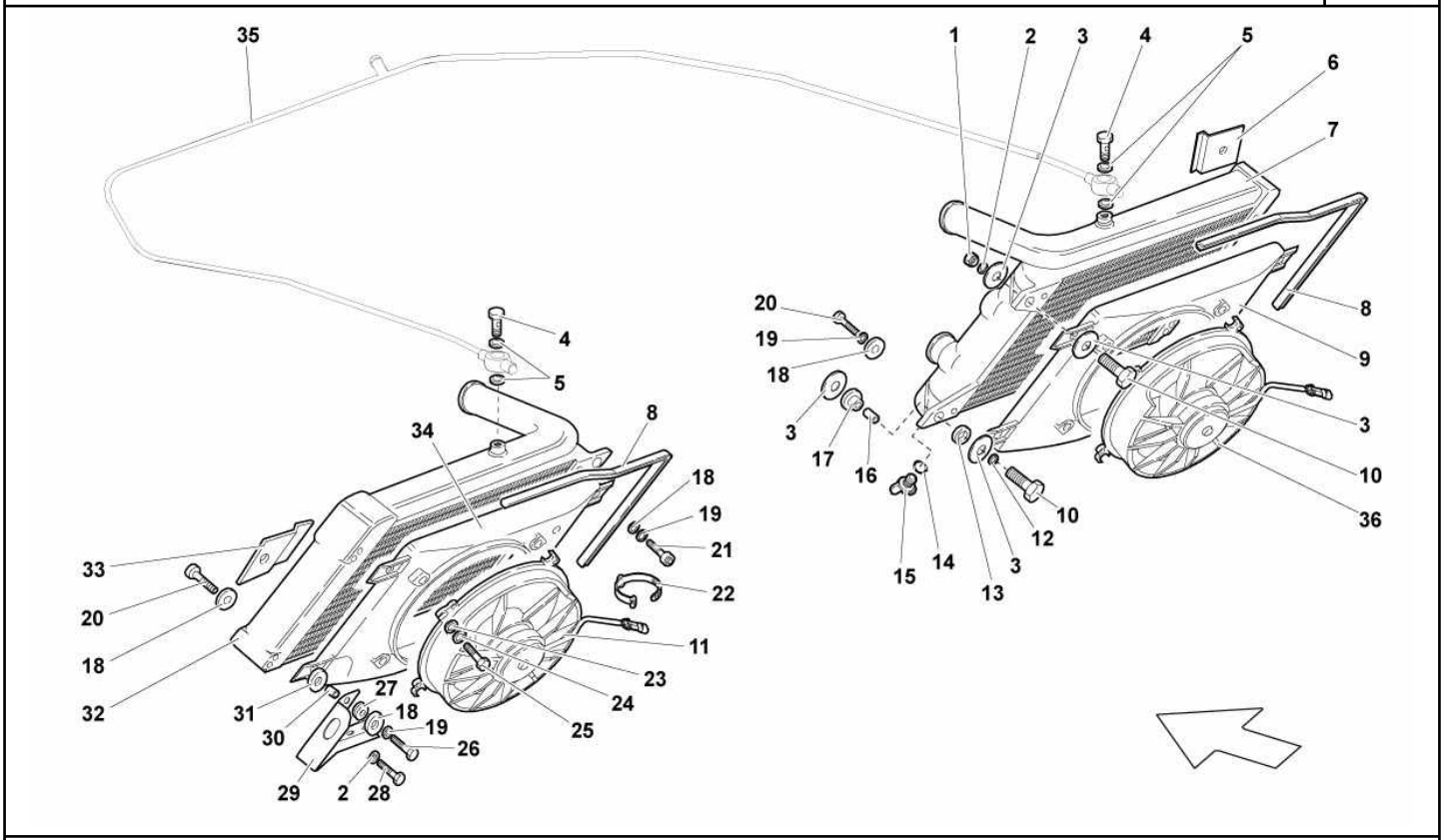

Ref.	Code	Q.ty	Description
1	N 01118410	2	NUT
2	N 90179103	2	WASHER 18X8,4X2,5
3	WHT001942	4	WASHER
4	N 01034518	2	SCREW M8X45
5	N 0138302	6	WASHER
6	410121235	1	BRACKET
7	410121252B	1	RH COMPLETE WATER RADIATOR
8	410121539	2	GASKET
9	410121334A	1	RH CONVEYOR
10	N 01034518	4	SCREW M8X45
11	07L959465B	1	ELECTRIC FAN
12	N 0152785	4	WASHER
13	WHT001189	2	RUBBER BUSHING
14	WHT003058	1	SEAL RING
15	410121299	2	PLUG
16	400121277	2	BUSHING
17	400121268	2	RUBBER BUSHING
18	WHT002961	8	WASHER
19	WHT002963	8	WASHER
20	N 10546402	4	SCREW M6X16
21	N 10650701	8	SCREW M6X12
22	008831515	1	CLAMP
23	WHT003040	4	WASHER
24	WHT000769A	4	WASHER
25	N 10430103	4	SCREW M5X16
26	N 91051101	2	SCREW M6X30
27	07L121585	2	RUBBER BUSHING
28	N 10536103	2	SCREW M8X16

Model : Spare Parts MURCIELAGO SV LP 670-4 Market: USA MY 2010

Group : 121-WATER COOLING SYSTEM

Table : 121.04.00-WATER COOLING SYSTEM

Ref.	Code	Q.ty	Description
29	410813685	1	LH BRACKET
29	410813686	1	RH BRACKET
30	008800606	2	BUSHING
31	N 0154045	8	WASHER
32	410121253B	1	LH COMPLETE WATER RADIATOR
33	410121214	1	BRACKET
34	410121333A	1	LH CONVEYOR
35		1	PIPE (SEE TABLE 121.03.00 - 2)
36	07L959465B	1	ELECTRIC FAN

Model : Spare Parts MURCIELAGO SV LP 670-4 Market: USA MY 2010

Group : 505-REAR CROSSPIECE

Table : 505.03.00-REAR ARMS

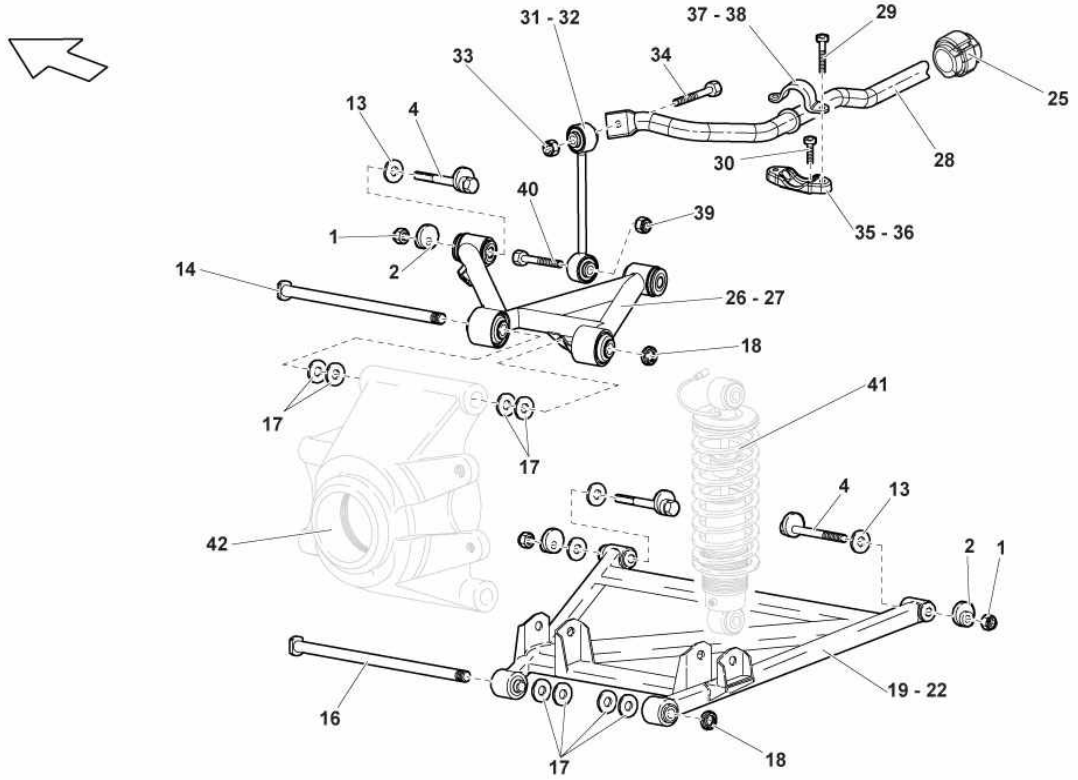

Ref.	Code	Q.ty	Description
1	WHT003461	8	NUT M12X1.25
2	410407135A	8	CAM
4	410407127A	8	SCREW
13	410407295	1	1 MM SHIM
13	410407295A	1	1.5 MM SHIM
13	410407295B	1	2 MM SHIM
13	410407295C	1	2.5 MM SHIM
13	410407295D	1	3 MM SHIM
14	410505109	2	JOURNAL
16	410505110	2	JOURNAL
17	400407749	24	0.5 MM SHIM
17	400407739	24	1.0 MM SHIM
17	400407740	24	1.5 MM SHIM
17	400407742	24	2.0 MM SHIM
18	N 10268603	4	NUT M14X1.5
19	410505311A	1	LH LOWER ARM
22	410505312A	1	RH LOWER ARM
25	4D0411327J	2	BUSHING
26	410505324B	1	RH UPPER ARM
27	410505323B	1	LH UPPER ARM
28	410511409A	1	STABILIZER BAR
29	N 10049308	4	SCREW M8X20
30	N 10713801	4	SCREW M6X16
31	410505465	1	CONNECTING ROD (LEFT)
32	410505465	1	CONNECTING ROD (RIGHT-HAND)
33	N 10286110	2	NUT M10
34	N 10570702	2	SCREW M10X60
35	400411031N	1	U-BOLT (LEFT)

Model : Spare Parts MURCIELAGO SV LP 670-4 Market: USA MY 2010

Group : 505-REAR CROSSPIECE

Table : 505.03.00-REAR ARMS

Ref.	Code	Q.ty	Description
36	400411031N	1	U-BOLT (RIGHT-HAND)
37	4D0411336G	1	U-BOLT (RIGHT-HAND)
38	4D0411336G	1	U-BOLT (LEFT)
39	N 10286110	2	NUT M10
40	N 10570702	2	SCREW M10X60
41			SHOCK ABSORBER (SEE TABLE 512.01.00)
42			HUB HOLDER (SEE TABLE 505.02.00)

Model : Spare Parts MURCIELAGO SV LP 670-4 Market: USA MY 2010

Group : 615-BRAKES DISCS

Table : 615.04.00-REAR BRAKES - CARBOCERAMIC

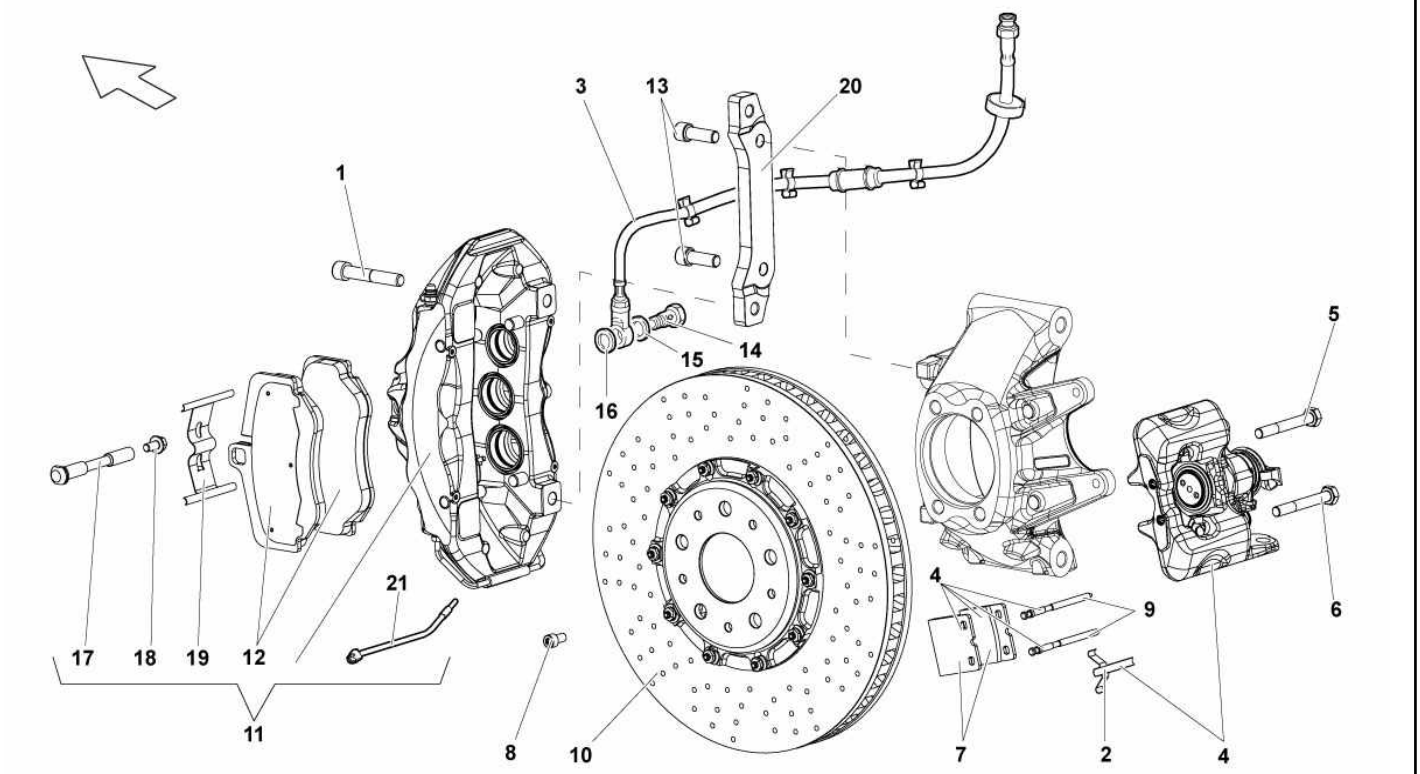

Ref.	Code	Q.ty	Description
1	N 10065003	4	SCREW M12X1.50X70
2		2	CLIP (CANNOT BE SOLD SEPARATELY - SEE REF. 4)
3	410611775A	2	HOSE
4	410615403C	1	LH BRAKE CALIPER
4	410615404C	1	RH BRAKE CALIPER
5	WHT002636	2	SCREW M10X1.25X80X26
6	WHT002636	2	SCREW M10X1.25X80X26
7	410798041A	1	BRAKE PAD SET
8	N 90972501	6	SCREW M8X16.0
9		4	JOURNAL (CANNOT BE SOLD SEPARATELY - SEE REF. 4)
10	410615601B	1	LH REAR BRAKE DISK
10	410615602B	1	RH REAR BRAKE DISK
11	410615405M	1	BLACK LH REAR BRAKE CALIPER
11	410615406M	1	BLACK RH REAR BRAKE CALIPER
11	410615405P	1	LH REAR BRAKE CALIPER - SILVER
11	410615405R	1	ORANGE LH REAR BRAKE CALIPER
11	410615406R	1	ORANGE RH REAR BRAKE CALIPER
11	410615406P	1	RH REAR BRAKE CALIPER - SILVER
11	410615405N	1	YELLOW LH REAR BRAKE CALIPER
11	410615406N	1	YELLOW RH REAR BRAKE CALIPER
12	4E0698151G	1	BRAKE PAD SET
13	WHT004089	4	SCREW M12X1.25X35
14	WHT003303	2	SCREW WITH HOLE
15	WHT001191	2	WASHER
16	WHT001191	2	WASHER
17		2	JOURNAL (CANNOT BE SOLD SEPARATELY - SEE REF. 11)
18		2	SCREW (CANNOT BE SOLD SEPARATELY - SEE REF. 11)
19		2	CLIP (CANNOT BE SOLD SEPARATELY - SEE REF. 11)

Model : Spare Parts MURCIELAGO SV LP 670-4 Market: USA MY 2010

Group : 615-BRAKES DISCS

Table : 615.04.00-REAR BRAKES - CARBOCERAMIC

Ref.	Code	Q.ty	Description
20	410615384	2	BRACKET
21	400698137	2	ELECTRIC CABLE

Model : Spare Parts MURCIELAGO SV LP 670-4 Market: USA MY 2010

Group : 807-BUMPERS

Table : 807.06.00-REAR BUMPERS

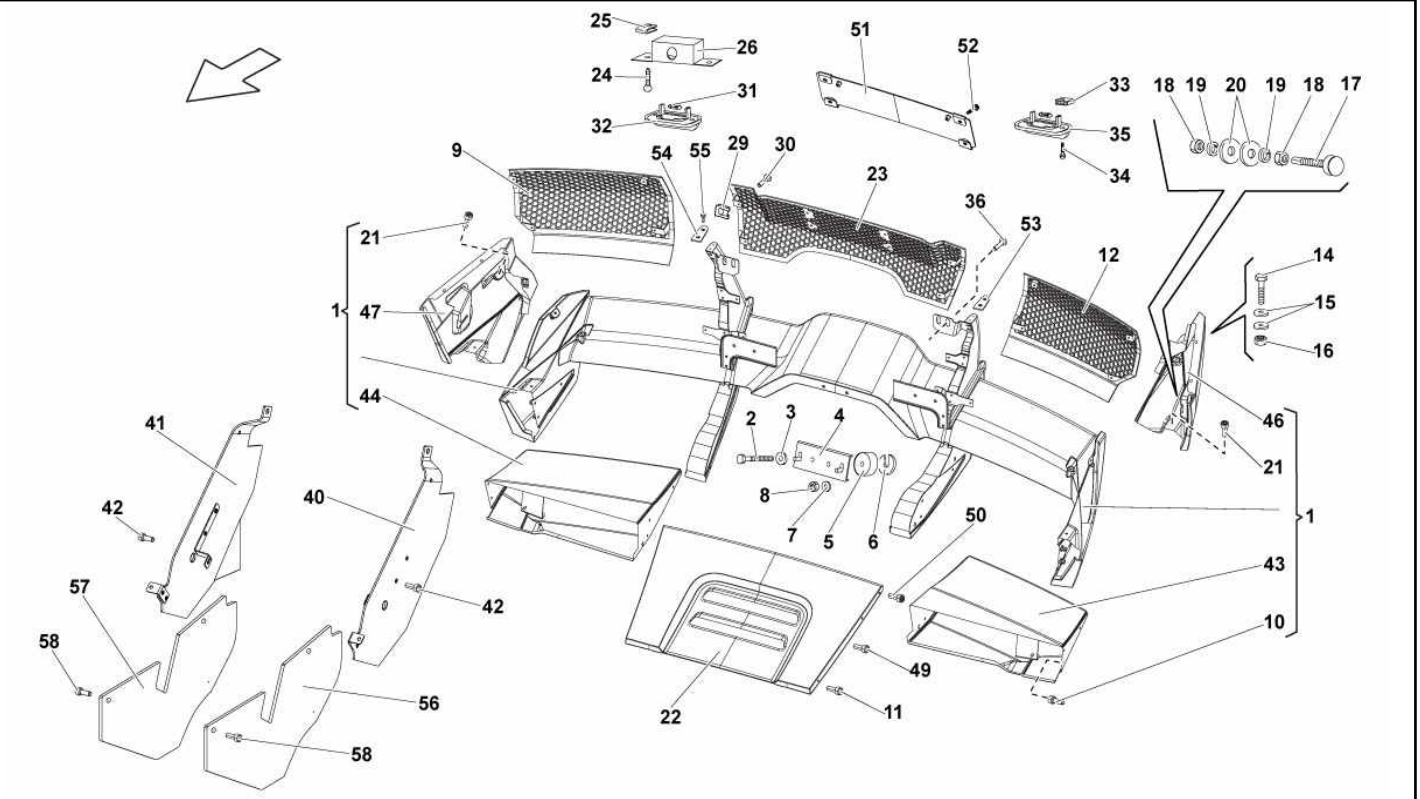

Ref.	Code	Q.ty	Description
1	429807302A	1	REAR BUMPER ASSEMBLY
2	N 10027004	4	SCREW M8X90
3	N 90179103	4	WASHER 18X8,4X2,5
4	410807331	2	REAR BUMPER FIXING BRACKET ASSEMBLY
5	410807869	4	REAR BUMPER CENTRAL RUBBER
6	410807255	4	3.0 MM SHIM
6	410807567	4	5.0 MM SHIM
7	N 90179103	4	WASHER 18X8,4X2,5
8	N 01118410	4	NUT M8
9			RIGHT REAR GRID ON BUMPERS (SEE TABLE 853.03.00 - SEE REF. 14)
10	N 90944603	12	SCREW M5X12
11	WHT004922	2	SCREW
12			LEFT REAR GRID ON BUMPERS (SEE TABLE 853.03.00 - SEE REF. 15)
14	N 0402936	4	SCREW M5X16
15	N 91109202	8	WASHER 5.30X20.00X1.00
16	N 0211963	4	NUT M5
17	410807699	2	JOURNAL
18	N 01100845	2	NUT M8X1.25X6.5
19	N 0152785	2	WASHER 8.4
20	N 90840802	4	WASHER 8.5X32X2.5
21	N 90944603	4	SCREW M5X12
22	429807649	1	GRID
23	429807675	1	GRID
24	WHT003065	4	SCREW 2.9X16
25	N 90834301	4	CLIP
26	410807001A	2	BRACKET
29	N 90834301	4	CLIP
30	N 90986803	4	SCREW 4.2X13

Model : Spare Parts MURCIELAGO SV LP 670-4 Market: USA MY 2010

Group : 807-BUMPERS

Table : 807.06.00-REAR BUMPERS

Ref.	Code	Q.ty	Description
32	8N0943022A	1	RH LICENCE-PLATE LAMP
33	N 90834301	4	CLIP
34	WHT003065	4	SCREW 2.9X16
35	8N0943021A	1	LH LICENCE-PLATE LAMP
36	N 90319404	4	SCREW M6X12
40	429863247A	1	LH INSULATION
41	429863248A	1	RH INSULATION
42	N 90319404	4	SCREW M6X12
43	429807985	1	LH WING
44	429807986	1	RH WING
46	429807119A	1	LH SIDE BUMPER SECTION
47	429807120A	1	RH SIDE BUMPER SECTION
49	WHT004921	2	SCREW
50	WHT004865	2	SCREW M5X44
51	429807287A	1	LICENSE PLATE HOLDER
52	N 10637302	4	SCREW M5X20
53	429827533	1	SHIM
54	429827533A	1	SHIM
55	410806224	4	RIVET
56	429863247B	1	LH INSULATION
57	429863248B	1	RH INSULATION
58	N 90319404	4	SCREW M6X12

Model : Spare Parts MURCIELAGO SV LP 670-4 Market: USA MY 2010

Group : 507-REAR DIFFERENTIAL CASE

Table : 507.01.00-REAR DIFFERENTIAL CASE

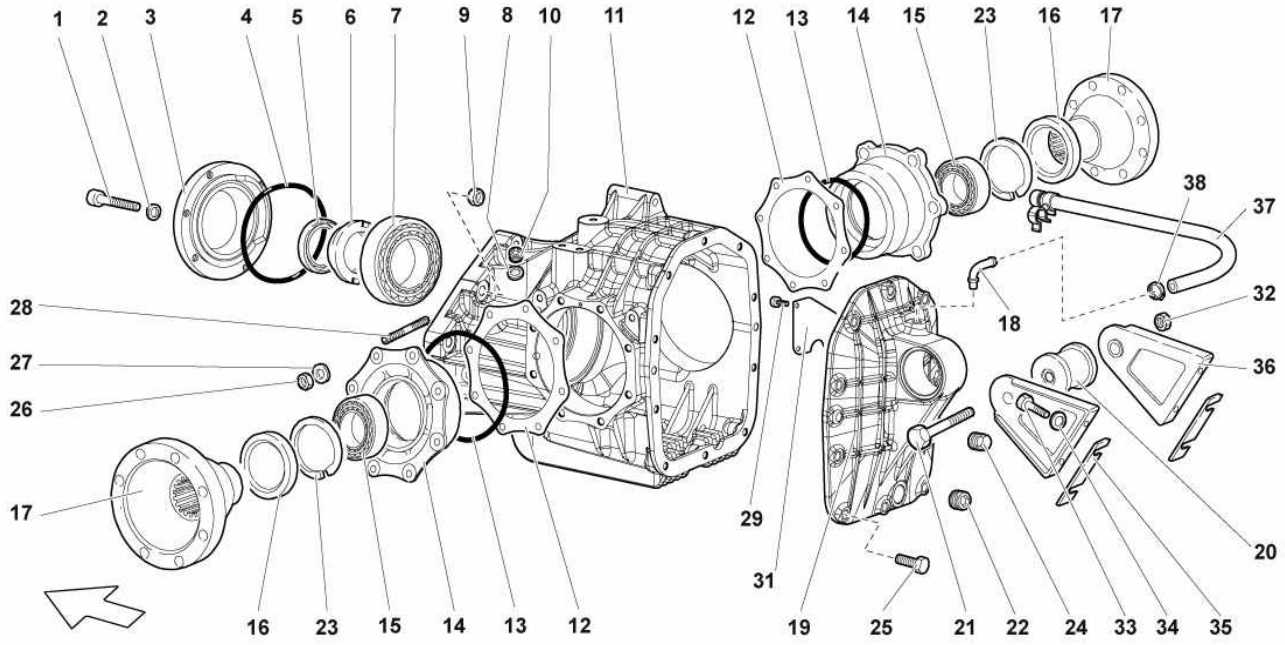

Ref.	Code	Q.ty	Description
1	N 91126601	6	SCREW M6X16
2			WASHER (VALID UP TO MODEL YEAR 07)
3	0B9525584A	1	FLANGE
4	WHT002222	1	SEAL RING
5	0B9525596	1	SEAL RING
6	0B9517606	1	RING NUT
7	0A5409123A	1	BEARING
8	N 0138494	1	WASHER
9	N 10261311	9	NUT
10	N 0160276	1	PLUG
11	0B9507103A	1	REAR DIFFERENTIAL CASE
12	0B9517242K	2	0.05 mm ADJUSTMENT SHIM
12	0B9517242J	2	0.1 mm ADJUSTMENT SHIM
12	0B9517242H	2	0.2 mm ADJUSTMENT SHIM
12	0B9517242G	2	0.3 mm ADJUSTMENT SHIM
12	0B9517242F	2	0.5 MM ADJUSTMENT SHIM
13	WHT002221	2	GASKET
14	0B9501312A	2	FLANGE
15	0B9501660	2	BEARING
16	0B9525583	2	OIL SEAL
17	0B9501265B	1	FLANGE
18	02D525118B	1	OIL BREATHER PIPE
19	0B9507145B	1	COVER
20	0B9501144	1	SILENTBLOC
21	WHT003561	1	SCREW M14X80
22	086301141	1	MAGNETIC PLUG
23	N 0122981	2	RETAINING RING
24	086301114A	1	PLUG

Model : Spare Parts MURCIELAGO SV LP 670-4 Market: USA MY 2010

Group : 507-REAR DIFFERENTIAL CASE

Table : 507.01.00-REAR DIFFERENTIAL CASE

Ref.	Code	Q.ty	Description
25	N 0903168	10	SCREW M8X30
26	N 01100845	16	NUT M8X1,25X6,5
27	410422395	16	WASHER
28	N 04440510	16	STUD BOLT M8X22
29	N 90305304	3	SCREW M6X10
31	0B9501716A	1	SHEET
32	WHT003614	1	NUT
33	N 01033520	4	SCREW M8X35
34	WHT002962	4	WASHER
35	410813761A	14	PLATE
36	410813297	2	SUPPORT
37	0B9525049	1	BREATHER PIPE
38	N 90686701	1	CLAMP

Model : Spare Parts MURCIELAGO SV LP 670-4 Market: USA MY 2010

Group : 517-REAR DIFFERENTIA

Table : 517.01.00-REAR DIFFERENTIAL

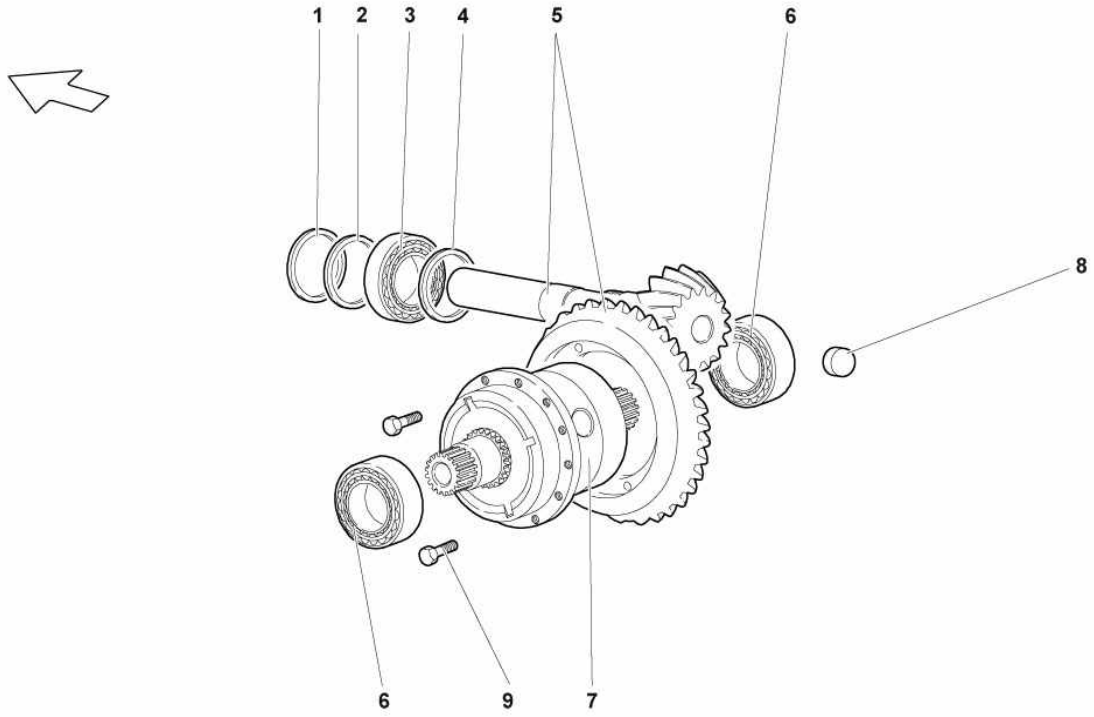

Ref.	Code	Q.ty	Description
1	0B9517213D	1	0.15 MM SHIM
1	0B9517213C	1	0.2 MM SHIM
1	0B9517213B	1	0.25 MM SHIM
1	0B9517213A	1	0.3 MM SHIM
1	0B9517213	1	0.5 MM SHIM
2	0B9517201	1	SPACER
3	0B9517185	1	BEARING
4	0B9517609D	1	0.15 MM SHIM
4	0B9517609C	1	0.2 MM SHIM
4	0B9517609B	1	0.25 MM SHIM
4	0B9517609A	1	0.3 MM SHIM
4	0B9517609	1	0.5 MM SHIM
5	0B9517141C	1	BEVEL GEAR PAIR
6	086311124	2	BEARING
7	086525523	1	DIFFERENTIAL
8	026103113	1	PLUG
9	WHT002267	12	SCREW M10X1X42

Model : Spare Parts MURCIELAGO SV LP 670-4 Market: USA MY 2010

Group : 500-REAR DIFFERENTIAL ASSEMBLY

Table : 500.01.00-REAR DIFFERENTIAL ASSEMBLY

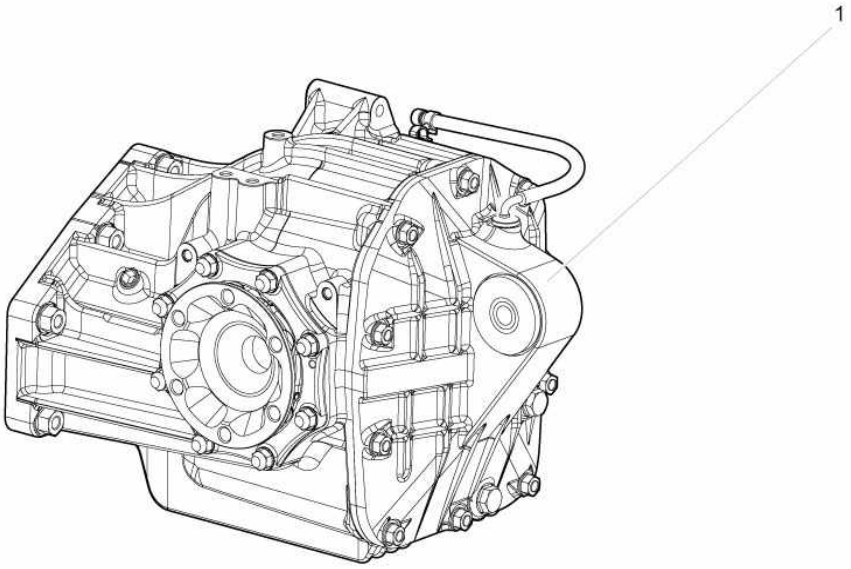

Ref.	Code	Q.ty	Description
1	45Y7Q5370	1	REAR DIFFERENTIAL

Model : Spare Parts MURCIELAGO SV LP 670-4 Market: USA MY 2010

Group : 505-REAR CROSSPIECE

Table : 505.02.00-REAR DRIVE SHAFT

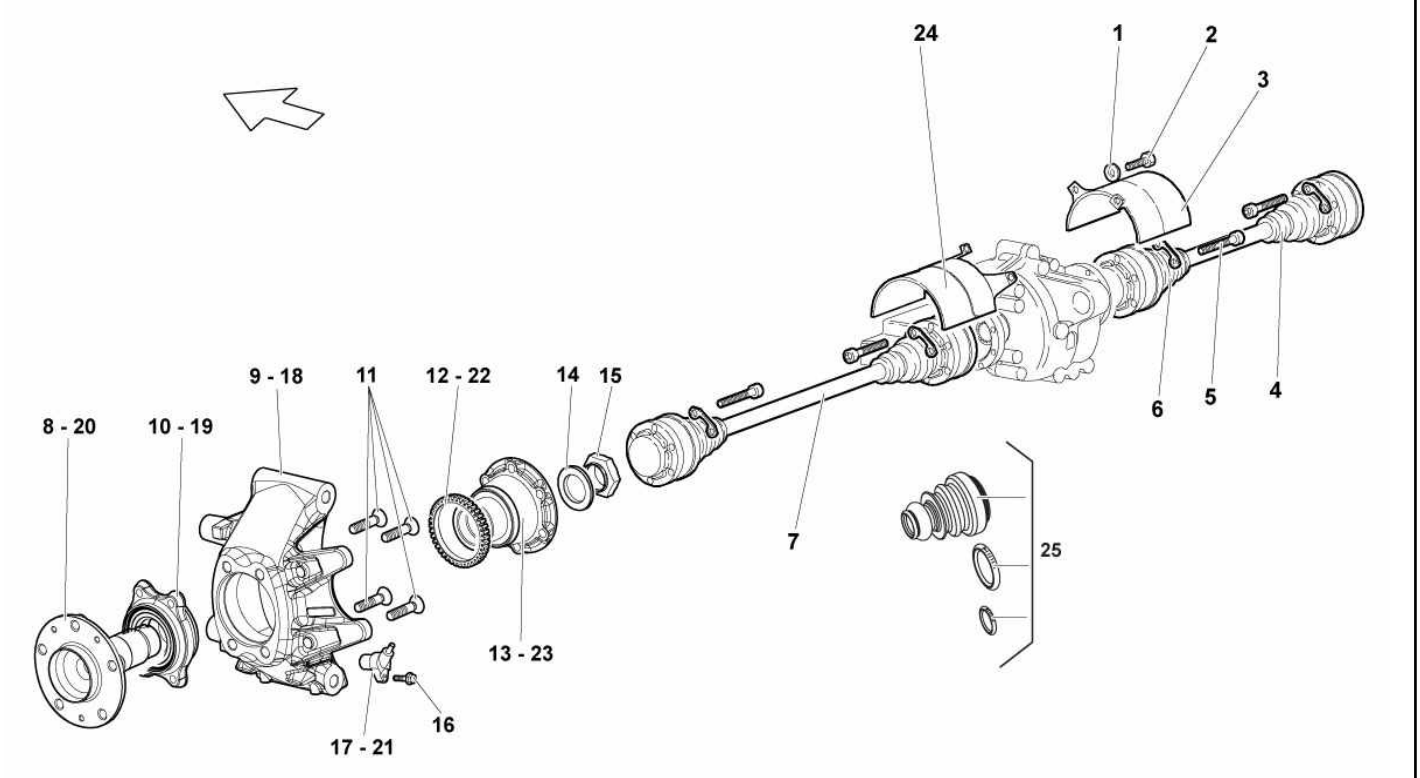

Ref.	Code	Q.ty	Description
1	WHT001514	4	WASHER
2	N 91143901	4	SCREW M8X16
3	410501713	1	PANEL (RIGHT-HAND)
4	410501212B	1	RH REAR OMOKINETIC DRIVE SHAFT
5	WHT002651	24	SCREW
6	410501357	12	WASHER
7	410501211B	1	LH REAR OMOKINETIC DRIVE SHAFT
8	410501653	1	HUB (LEFT)
9	410505435B	1	LEFT RIGHT HUB CARRIER (CERAMIC BRAKE)
10	4E0407625D	1	BEARING (LEFT)
11	WHT000237	8	SCREW
12	410614150A	1	CROWN GEAR (LEFT)
13	410501655	1	FLANGE (LEFT)
14	410501279	2	WASHER
15	410501226	2	RING NUT
16	N 10285602	2	SCREW M6X25
17	410927801C	1	ABS SENSOR (LEFT)
18	410505436B	1	REAR RIGHT HUB CARRIER (CERAMIC BRAKE)
19	4E0407625D	1	BEARING (RIGHT-HAND)
20	410501653	1	HUB (RIGHT-HAND)
21	410927801C	1	ABS SENSOR (RIGHT-HAND)
22	410614150A	1	CROWN GEAR (RIGHT-HAND)
23	410501655	1	FLANGE (RIGHT-HAND)
24	410501713	1	PANEL (LEFT)
25			KIT AXELSHAFT REAR (VALID UP TO MODEL YEAR 08)

Model : Spare Parts MURCIELAGO SV LP 670-4 Market: USA MY 2010

Group : 821-FRONT AND REAR FENDER

Table : 821.02.00-REAR FENDER

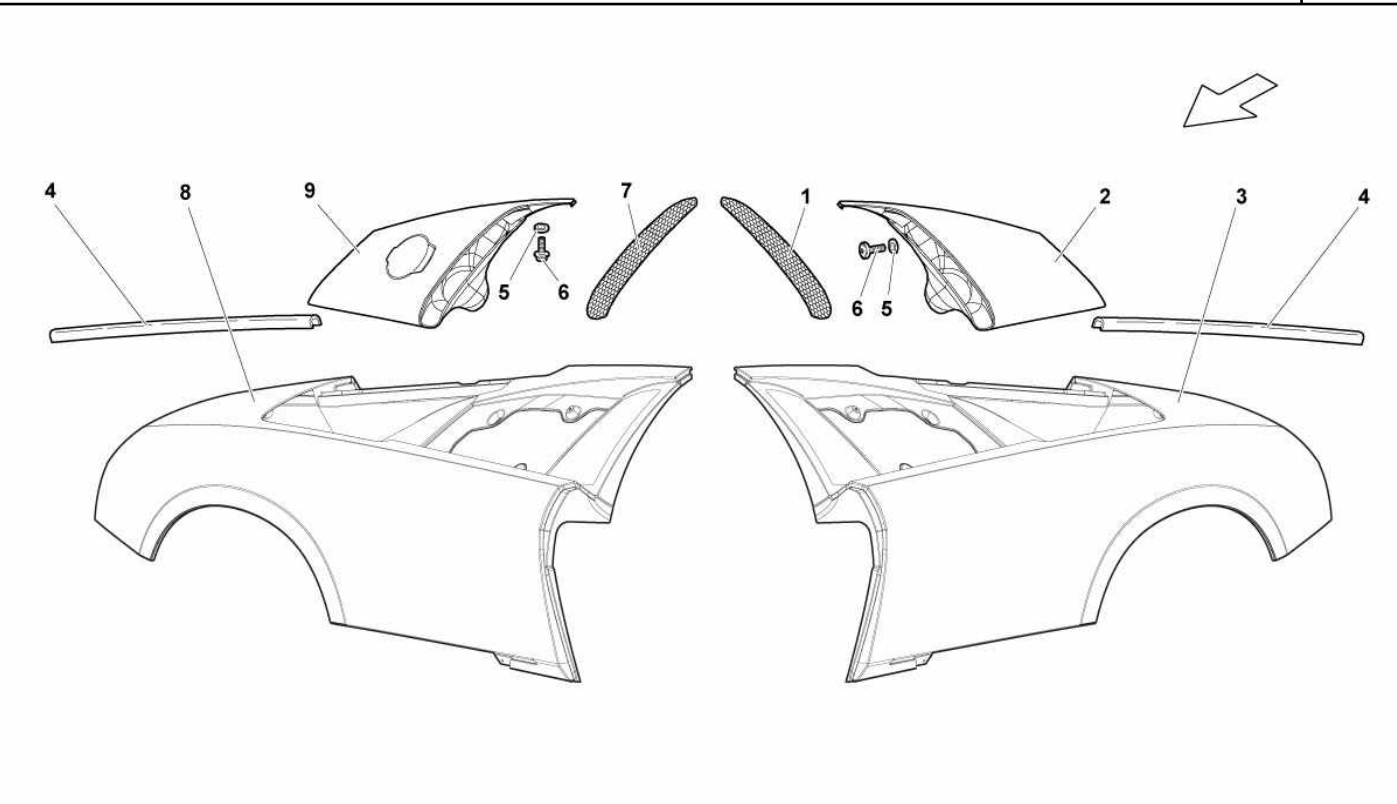

Ref.	Code	Q.ty	Description
1	418853677	1	NET LEFT
2	429809953	1	FENDER LEFT COVER
3	429821017	1	LEFT REAR FENDER ASSEMBLY
4	418821243	2	CHANNEL
5	N 91109202	8	WASHER 5.30X20.00X1.00
6	N 0402936	8	SCREW M5X16.0
7	418853676	1	RIGHT NET
8	429821018	1	RIGHT REAR FENDER ASSEMBLY
9	429809954	1	FENDER RH COVER AND FUEL LID

Model : Spare Parts MURCIELAGO SV LP 670-4 Market: USA MY 2010

Group : 827-REAR HOOD AND SPOILER

Table : 827.09.00-REAR HOOD AND SPOILER

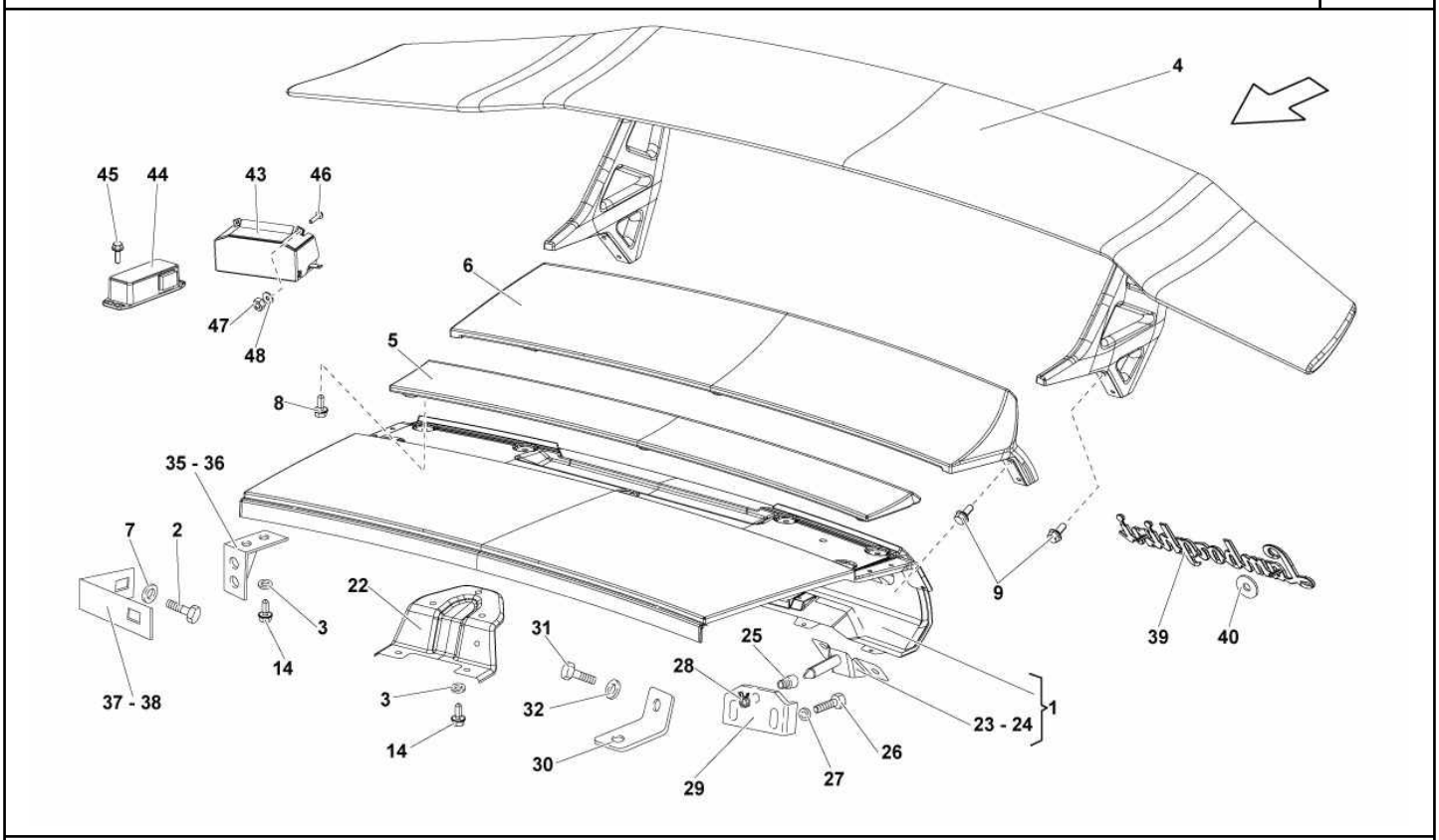

Ref.	Code	Q.ty	Description
1	429827015A	1	ENGINE HOOD (REAR VIEW CAMERA)
1	429827015	1	ENGINE HOOD (STANDARD)
2	N 10536103	2	SCREW M8X16
3	WHT003407	7	WASHER
4	429827933	1	HIGH REAR WING
5	429827488	1	COVER
6	429827948	1	SILENCER COVER HOOD REAR SPOILER (STANDARD)
7	N 90840802	2	WASHER
8	N 90319404	7	SCREW M6X12
9	N 91126601	8	SCREW M6X16
14	N 90319404	7	SCREW M6X12
22	418827277	1	LOCK FASTENER CASE
23	410827523	1	LH BRACKET
24	410827524	1	RH BRACKET
25	410814940	2	BUSHING
26	N 01021723	4	SCREW M6X20
27	WHT002961	4	WASHER 6.5X18X1.5
28	WHT003100	2	CLAMP
29	410814449	2	BRACKET
30	418827909	2	BRACKET
31	N 10536103	2	SCREW M8X16
32	N 01166623	2	WASHER 6.40X18.0X1.60
35	410813535	1	LH BRACKET
36	410813536	1	RH BRACKET
37	410827199	1	LH BRACKET
38	410827200	1	RH BRACKET
39	400853742B	1	LAMBORGHINI ORNAMENT
40	400853139	2	CLIP

Model : Spare Parts MURCIELAGO SV LP 670-4 Market: USA MY 2010

Group : 827-REAR HOOD AND SPOILER

Table : 827.09.00-REAR HOOD AND SPOILER

Ref.	Code	Q.ty	Description
43	410980543	1	REAR VIEW CAMERA
44	410907441	1	REAR VIEW CAMERA CONTROL UNIT
45	N 10082911	2	SCREW M6X16
46	N 90455205	2	SCREW M4X10
47	WHT002959	2	NUT M4
48	N 01152221	2	WASHER

Model : Spare Parts MURCIELAGO SV LP 670-4 Market: USA MY 2010

Group : 512-REAR SUSPENSION

Table : 512.01.00-REAR SUSPENSION

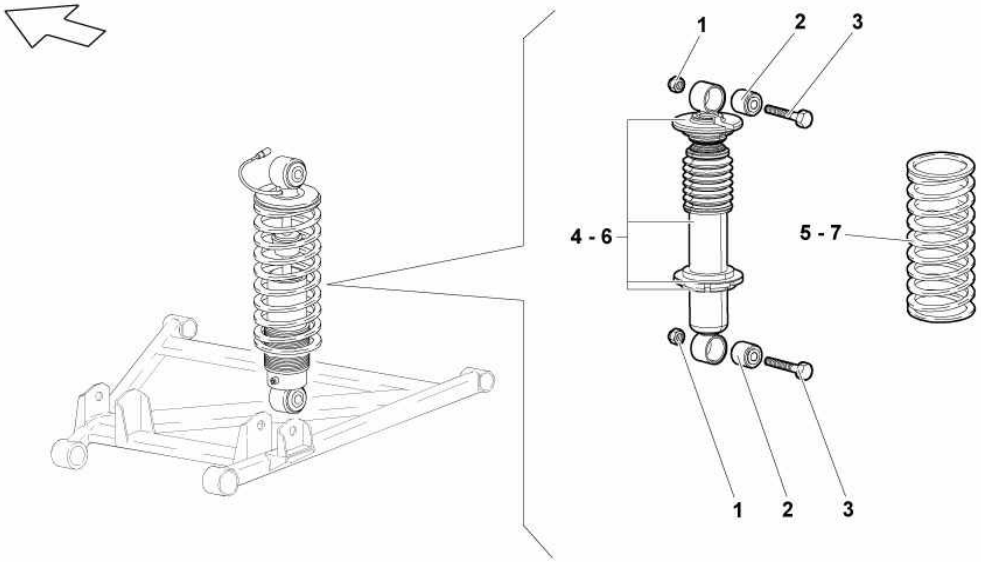

Ref.	Code	Q.ty	Description
1	WHT003355	8	NUT
2			FLEXIBLE BUSHING (CANNOT BE SOLD SEPARATELY)
3	WHT002639	8	SCREW M12X1.25X70X30
4	410512031B	2	REAR ELECTRONICALLY-CONTROLLED SHOCK ABSORBER (LEFT)
5	410511115A	2	SPRING (LEFT)
6	410512031B	2	REAR ELECTRONICALLY-CONTROLLED SHOCK ABSORBER (RIGHT-HAND)
7	410511115A	2	SPRING (RIGHT-HAND)

Model : Spare Parts MURCIELAGO SV LP 670-4 Market: USA MY 2010

Group : 601-TYRES

Table : 601.02.00-REAR TYRE

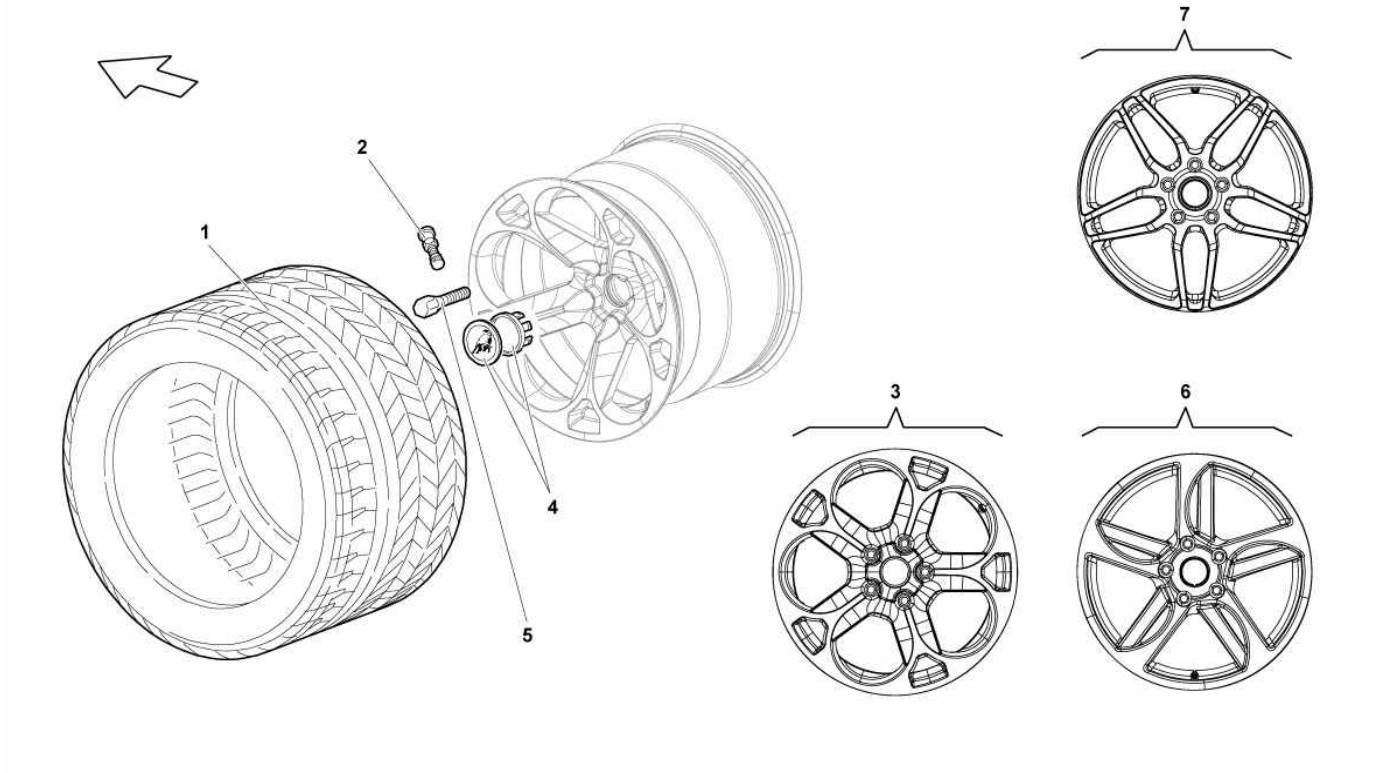

Ref.	Code	Q.ty	Description
1	410601313D	1	LH SPORT TYRES
1	410601313E	1	RH SPORT TYRES
2			VALVE (SEE TABLE 907.01.00)
3			RIM (NOT FOR SUPERVELOCE MODEL)
4	400601147C	2	MOLDING AND HUP-CAP - COLORED
5	WHT001161B	10	BLACK STUD
6			RIM (NOT FOR SUPERVELOCE MODEL)
7	410601017AL	2	RIM

Model : Spare Parts MURCIELAGO SV LP 670-4 Market: USA MY 2010

Group : 837-DOORS - KEYS KIT

Table : 837.06.00-EXTERNAL REAR VIEW MIRRORS

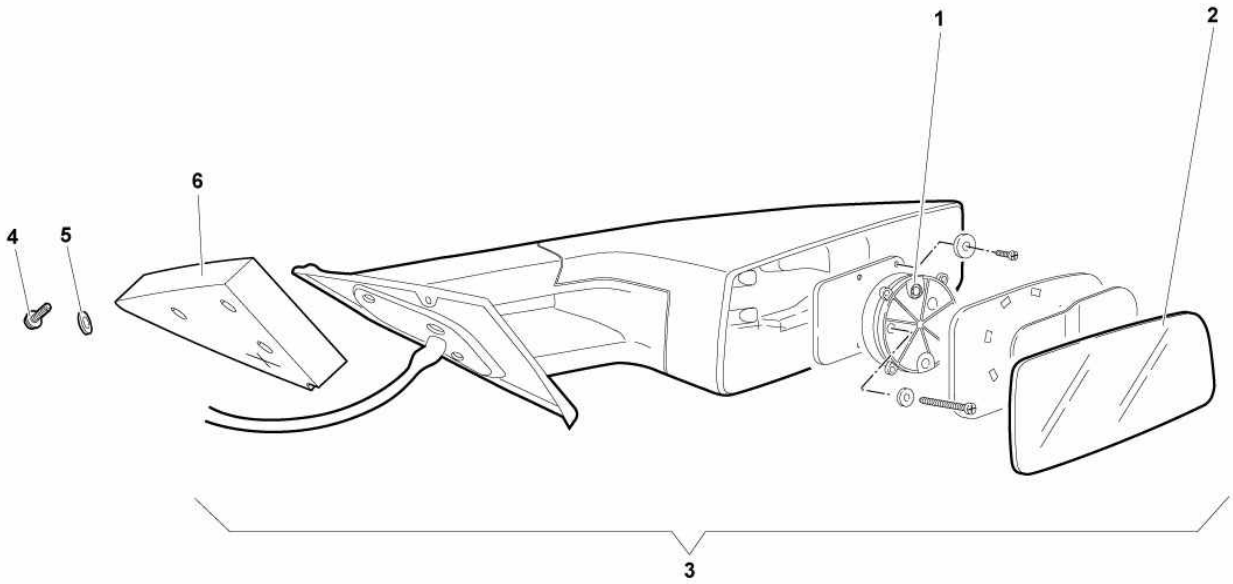

Ref.	Code	Q.ty	Description
1	410877795A	2	MOTOR
2	410857521G	1	LEFT SIDE VIEW MIRROR
2	410857522G	1	RIGHT CONVEX SIDE VIEW MIRROR
3	418857501K	1	LEFT EXTERIOR REARVIEW MIRROR
3	418857502K	1	RIGHT EXTERIOR REARVIEW MIRROR
4	N 10718801	3	SCREW M6X16
5	WHT002961	3	WASHER 6.5X18X1.5
6	410857679	1	LEFT GASKET
6	410857680	1	RIGHT GASKET

Model : Spare Parts MURCIELAGO SV LP 670-4 Market: USA MY 2010

Group : 810-REAR WHEELHOUSE

Table : 810.01.00-REAR WHEELHOUSE

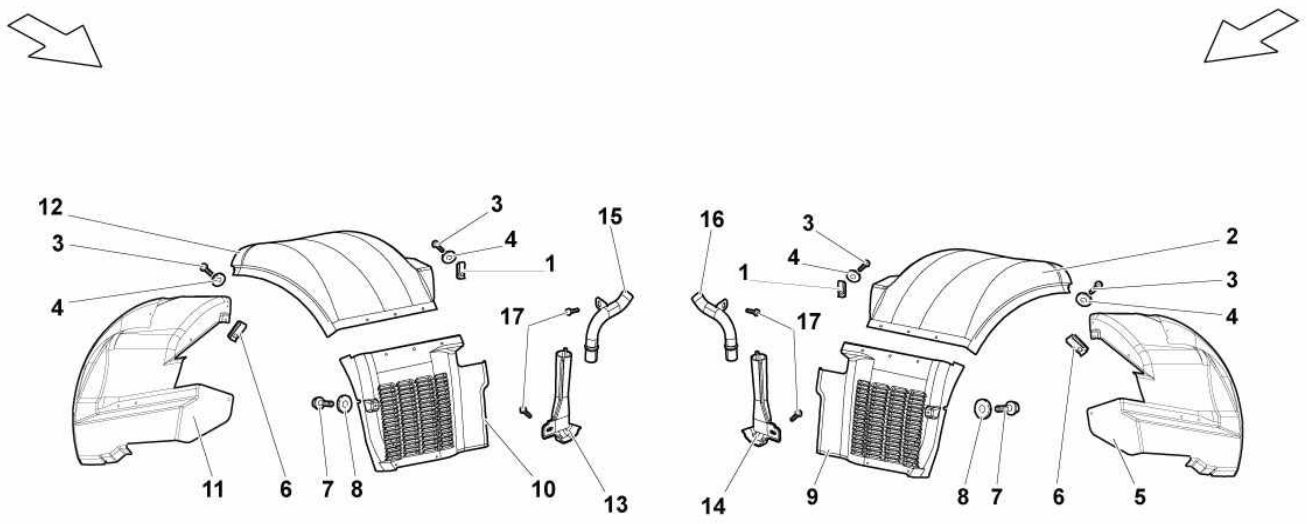

Ref.	Code	Q.ty	Description
1	WHT000916A	7	CLIP
2	410810981	1	LEFT REAR WHEELARCH, CENTRAL PART
3	WHT003066	11	SCREW 4.8X13
4	N 91109201	20	WASHER
5	410810985A	1	LEFT REAR WHEELARCH, REAR PART
6	N 90834301	8	CLIP
7	N 90319404	12	SCREW M6X12
8	N 91115501	12	WASHER 6.2X22X1
9	410810171A	1	LEFT REAR WHEELARCH, FRONT PART
10	410810172A	1	RIGHT REAR WHEELARCH, FRONT PART
11	410810986A	1	RIGHT REAR WHEELARCH, REAR PART
12	410810982	1	RIGHT REAR WHEELARCH, CENTRAL PART
13	410863325	1	LH CONVEYOR
14	410863326	1	RH CONVEYOR
15	410863149	1	LH CONVEYOR
16	410863150	1	RH CONVEYOR
17	N 91040401	4	SCREW ST4.8X22.0

Model : Spare Parts MURCIELAGO SV LP 670-4 Market: USA MY 2010

Group : 109-TIMING SYSTEM

Table : 109.02.00-RIGHT HEAD TIMING SYSTEM

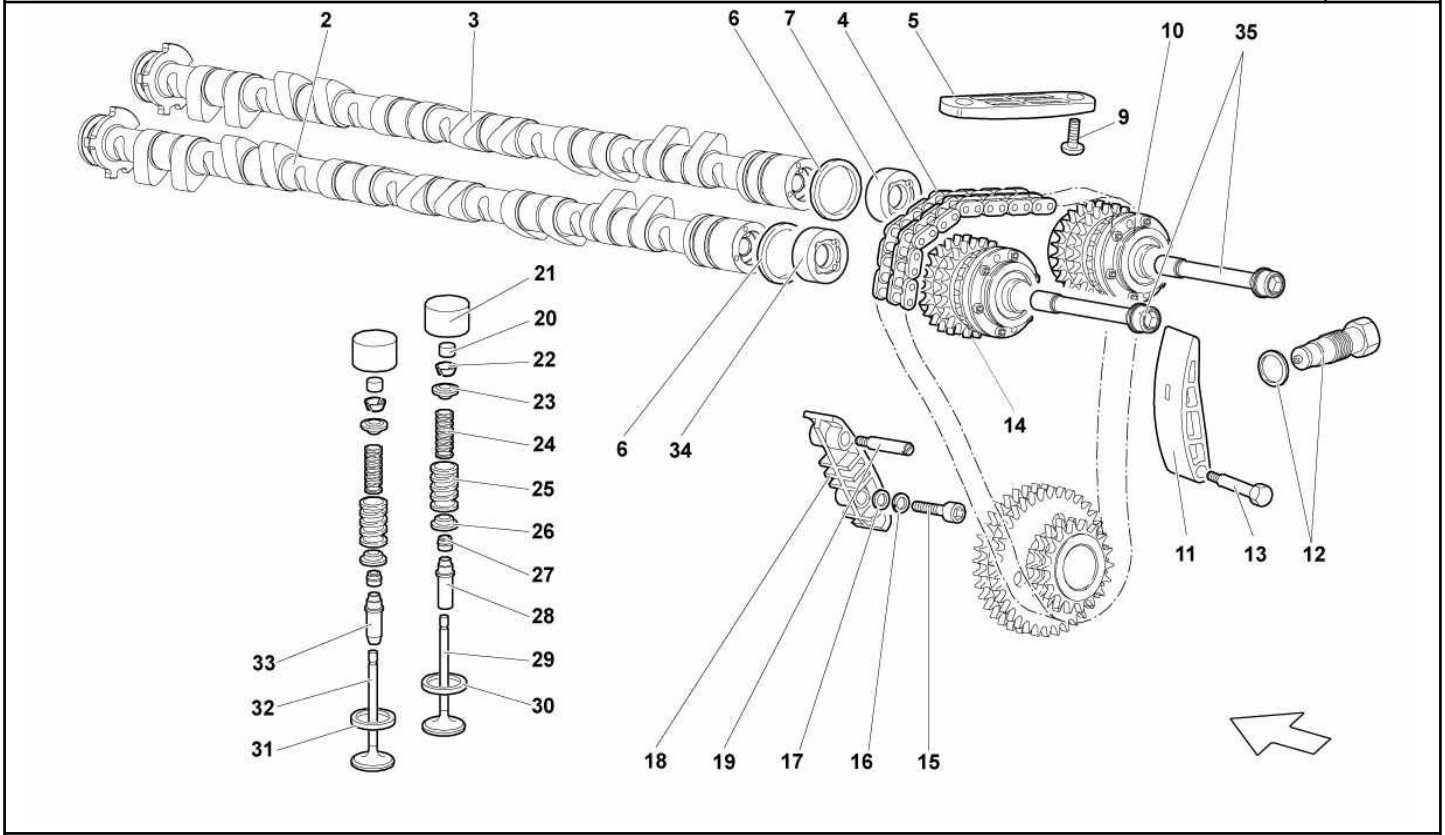

Ref.	Code	Q.ty	Description
2	07M109306H	1	RH EXHAUST CAMSHAFT
3	07M109304L	1	RH INTAKE CAMSHAFT
4	07M109231	1	UPPER TIMING CHAIN
5	07M109513	1	SHOE
6	07M109349	2	OIL SEAL
7	07M109423A	1	SUPPORT
9	N 90638102	2	SCREW
10	07M109083C	1	INTAKE PHASE TRANSFORMER
11	07M109508	1	SHOE
12	07M109255	1	CHAIN TIGHTENER
13	07M109225A	1	JOURNAL
14	07M109084D	1	EXHAUST PHASE TRANSFORMER
15	WHT003071	1	SCREW
16	WHT001397	1	WASHER
17	WHT002962	1	WASHER
18	07M109469	1	SHOE
19	07M109224	1	JOURNAL
20	07M109320BP	24	ADJUSTMENT SHIM (1,60 MM)
20	07M109320BQ	24	ADJUSTMENT SHIM (1,65 MM)
20	07M109320BR	24	ADJUSTMENT SHIM (1,70 MM)
20	07M109320BS	24	ADJUSTMENT SHIM (1,75 MM)
20	07M109320BT	24	ADJUSTMENT SHIM (1,80 MM)
20	07M109320CA	24	ADJUSTMENT SHIM (1,85 MM)
20	07M109320CB	24	ADJUSTMENT SHIM (1,90 MM)
20	07M109320CC	24	ADJUSTMENT SHIM (1,95 MM)
20	07M109320CD	24	ADJUSTMENT SHIM (2,00 MM)
20	07M109320CE	24	ADJUSTMENT SHIM (2,05 MM)
20	07M109320CF	24	ADJUSTMENT SHIM (2,10 MM)

Model : Spare Parts MURCIELAGO SV LP 670-4 Market: USA MY 2010

Group : 109-TIMING SYSTEM

Table : 109.02.00-RIGHT HEAD TIMING SYSTEM

Ref.	Code	Q.ty	Description
20	07M109320CG	24	ADJUSTMENT SHIM (2,15 MM)
20	07M109320CH	24	ADJUSTMENT SHIM (2,20 MM)
20	07M109320CJ	24	ADJUSTMENT SHIM (2,25 MM)
20	07M109320CK	24	ADJUSTMENT SHIM (2,30 MM)
20	07M109320CL	24	ADJUSTMENT SHIM (2,35 MM)
20	07M109320CM	24	ADJUSTMENT SHIM (2,40 MM)
20	07M109320CN	24	ADJUSTMENT SHIM (2,45 MM)
20	07M109320CP	24	ADJUSTMENT SHIM (2,50 MM)
20	07M109320CQ	24	ADJUSTMENT SHIM (2,55 MM)
21	07M109309A	24	VALVE CONTROL TAPPET
22	036109651B	48	VALVE COTTER
23	07M109641A	24	TAPPET UPPER PLATE
24	07M109633B	24	INNER SPRING
25	07M109623B	24	OUTER SPRING
26	07M109642B	24	TAPPET LOWER PLATE
27	057109675	24	SEAL RING
28			INTAKE VALVE GUIDE (CANNOT BE SOLD SEPARATELY)
29	07M109601B	24	INTAKE VALVE
30			INTAKE VALVE SEAT (CANNOT BE SOLD SEPARATELY)
31			EXHAUST VALVE SEAT (CANNOT BE SOLD SEPARATELY)
32	07M109611A	24	EXHAUST VALVE
33			EXHAUST VALVE GUIDE (CANNOT BE SOLD SEPARATELY)
34	07M109423A	1	SUPPORT
35	07M109177C	2	SCREW

Model : Spare Parts MURCIELAGO SV LP 670-4 Market: USA MY 2010

Group : 853-SIDE MEMBERS - AIR INTAKE

Table : 853.02.00-RH EXTERNAL SIDE MEMBER

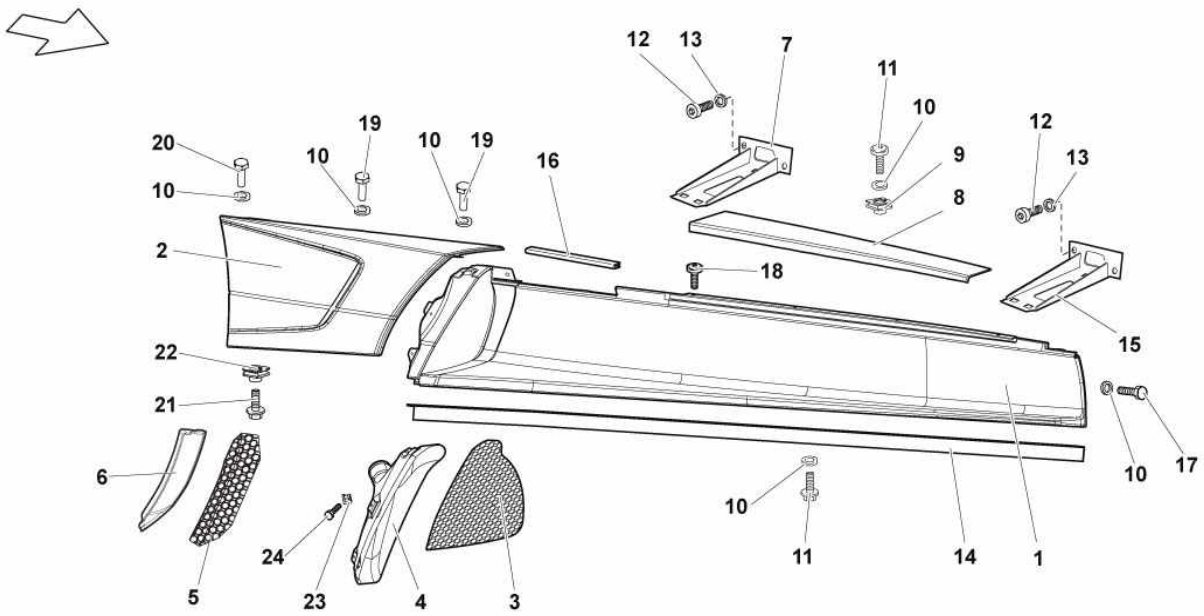

Ref.	Code	Q.ty	Description
1	410853990A	1	FRONT RIGHT SIDE MEMBER ASSEMBLY
2	410853268	1	REAR RIGHT SIDE MEMBER
3	410864444A	1	NET
4	410903423	1	ALTERNATOR AIR CONVEYOR
5	410853668	1	NET
6	410853915A	1	COVER
7	410813549	1	BRACKET
8	410853492A	1	SCUFF PLATE (CARBON INTERIOR DARK - STANDARD - KLAVIERLACK)
9	N 90830901	4	CLIP M6
10	WHT002961	18	WASHER
11	N 10718801	18	SCREW
12	WHT003101	4	SCREW
13	N 01152427	4	WASHER
14	410857470	1	RIGHT NOLDER
15	410813550	1	BRACKET
16	400853893	1	GASKET
17	WHT003069	1	SCREW M6X20
18	WHT000757	4	SCREW M6X16
19	N 10718801	2	SCREW M6X16
20	N 90319404	1	SCREW M6X12
21	N 91136801	3	SCREW
22	N 90834301	3	CLIP ST4.8X17.00X11.3
23	N 0154523	5	CLIP ST4.2X13.00X11.00
24	N 90986803	5	SCREW

Model : Spare Parts MURCIELAGO SV LP 670-4 Market: USA MY 2010

Group : 103-ENGINE

Table : 103.03.00-RIGHT CYLINDER HEAD AND COVER

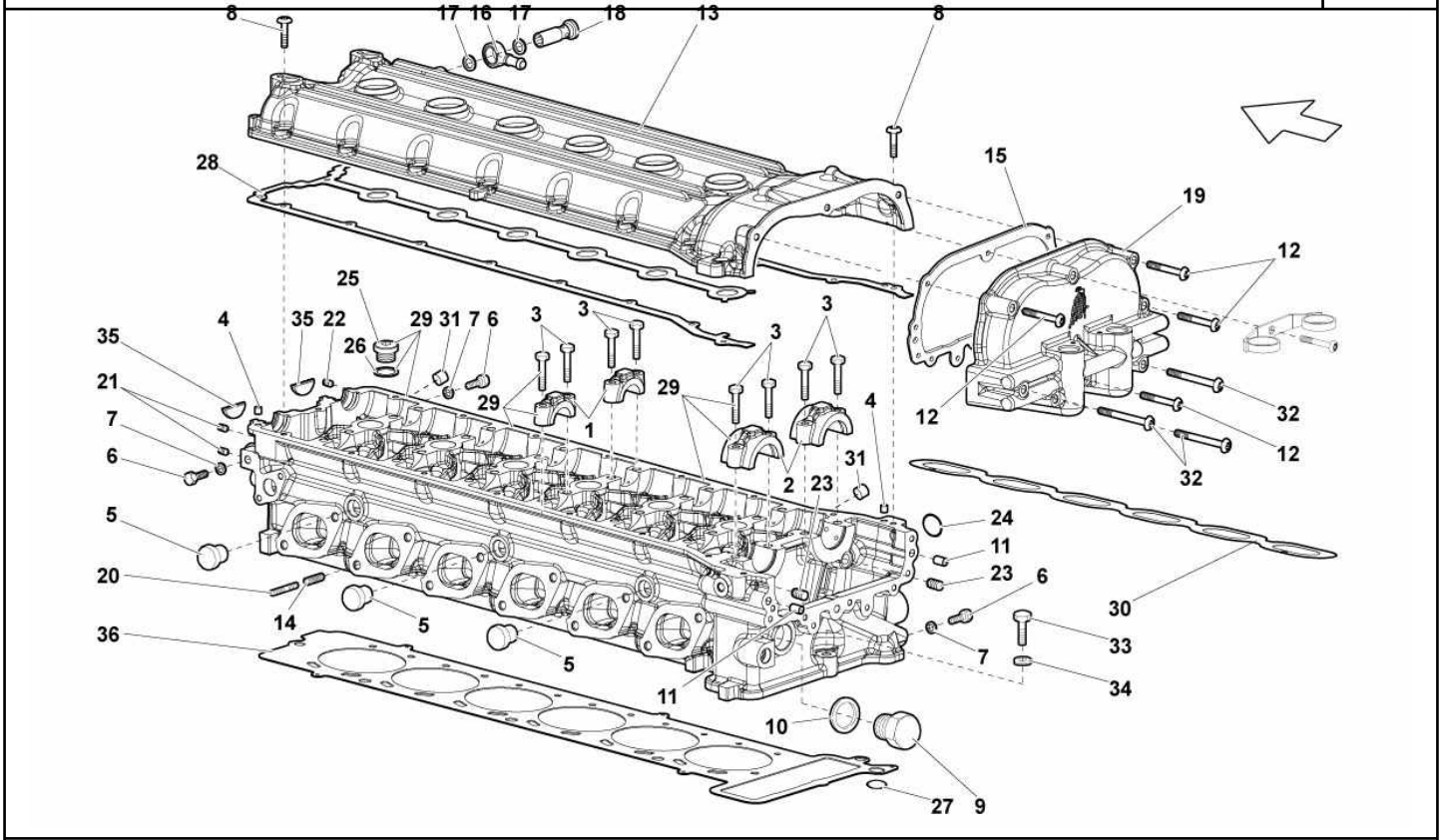

Ref.	Code	Q.ty	Description
1	07M103127A	12	SUPPORT
2	07M103285B	2	SUPPORT
3	N 10554005	28	SCREW
4	N 10703201	2	DOWEL
5	N 01190311	3	PLUG
6	N 0102358	3	SCREW
7	N 0138302	3	WASHER
8	N 91071702	17	SCREW
9	07M103035	1	PLUG
10	WHT003049	1	WASHER
11	07M109221A	2	BUSHING
12	N 10582103	4	SCREW
13	07M103476D	1	COVER
14	008840802	12	HELI-COIL
15	07M109091	1	GASKET
16	07M103606A	1	PIPE FITTING
17	N 91116801	2	WASHER
18	WHT001669	1	SCREW
19	07M109144F	1	RH HEAD PHASE TRANSFORMER COVER ASSEMBLY
20	WHT003028	12	STUD BOLT
21	07M103545	2	PLUG
22	07M103545	1	PLUG
23	07M103545	2	PLUG
24	WHT003062	1	SEAL RING
25	N 0160282	7	PLUG
26	N 0138481	7	WASHER
27	WHT003522	1	SEAL RING
28	07M103484C	1	GASKET

Model : Spare Parts MURCIELAGO SV LP 670-4 Market: USA MY 2010

Group : 103-ENGINE

Table : 103.03.00-RIGHT CYLINDER HEAD AND COVER

Ref.	Code	Q.ty	Description
29	460537003	1	RH CYLINDER HEAD (COMPLETE)
30	07M129717B	1	GASKET
31	07M133615	2	DOWEL
32	N 10562603	3	SCREW
33	N 01033520	2	SCREW
34	WHT000771	2	WASHER
35	07M103113	2	COVER
36	07M103148B	1	RH GASKET

Model : Spare Parts MURCIELAGO SV LP 670-4 Market: USA MY 2010

Group : 881-SEATS AND SAFETY BELTS

Table : 881.01.00-SEATS AND SAFETY BELTS

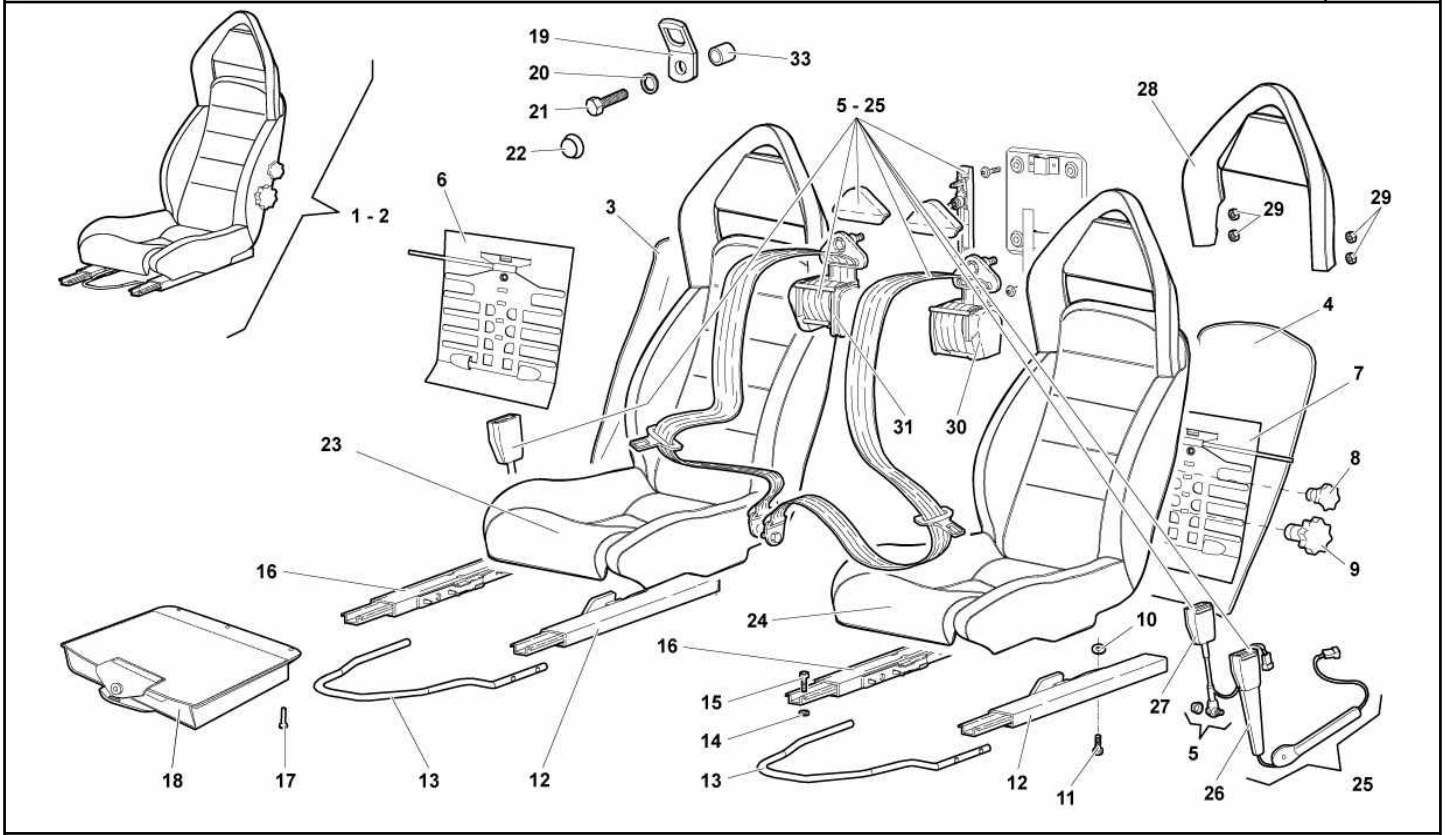

Ref.	Code	Q.ty	Description
1	429881011	1	LEFT SEAT (ALCANTARA UPHOLSTERY - SUPPLY VIN)
2	429881012A	1	RIGHT SEAT (ALCANTARA UPHOLSTERY - SUPPLY VIN)
3	0075013686	1	RIGHT SEAT REAR COVER (SUPPLY VIN)
4	0075013686	1	LEFT SEAT REAR COVER (SUPPLY VIN)
5	418857447	1	SEAT BELTS KIT
6	410881880	1	BACK-REST ADJU.-RH
7	410881879	1	BACK-REST ADJU.-LH
8	0075009199	1	LUMBAR SUPPORT ADJUSTING HANDLE
9	0075009198	2	SEAT BACK ADJUSTMENT KNOB
10	N 90485901	8	WASHER
11	N 10644902	8	SCREW M8X18
12	410881219	2	LH GUIDE
13	410881091B	2	SEAT LEVER
14	009435257	4	SPACER
15	N 10644902	4	SCREW M8X18
16	410881220	2	RH GUIDE
17	N 91153701	4	RIVET
18	410881581	1	BRIEFCASE
19	400858849	1	CHILD RESTRAINT ANCHOR
20	N 91079201	1	WASHER
21	N 98951601	1	SCREW
22	811857845	1	BELT SCREW CAP
23	410881406A	1	SEAT COVER RIGHT (SUPPLY VIN)
24	410881405	1	SEAT COVER LEFT (SUPPLY VIN)
25			SEAT BELTS KIT (FOR LP640 ROADSTER MODEL)
26			BUCKLE (FOR LP640 ROADSTER MODEL)
27	418880505	2	BUCKLE
28	410881901	1	HEAD RESTRAINT WITH COVER LEFT (SUPPLY VIN)

Model : Spare Parts MURCIELAGO SV LP 670-4 Market: USA MY 2010

Group : 881-SEATS AND SAFETY BELTS

Table : 881.01.00-SEATS AND SAFETY BELTS

Ref.	Code	Q.ty	Description
28	410881902	1	HEAD RESTRAINT WITH COVER RIGHT (SUPPLY VIN)
29	N 01100637	8	NUT M6
30			SEAT BELT - LH (CANNOT BE SOLD SEPARATELY - SEE REF. 5)
31			SEAT BELT - RH (CANNOT BE SOLD SEPARATELY - SEE REF. 5)
33	429857515	1	BUSHING

Model : Spare Parts MURCIELAGO SV LP 670-4 Market: USA MY 2010

Group : 131-EMISSION CONTROL SYSTEM

Table : 131.03.00-SECONDARY AIR SYSTEM

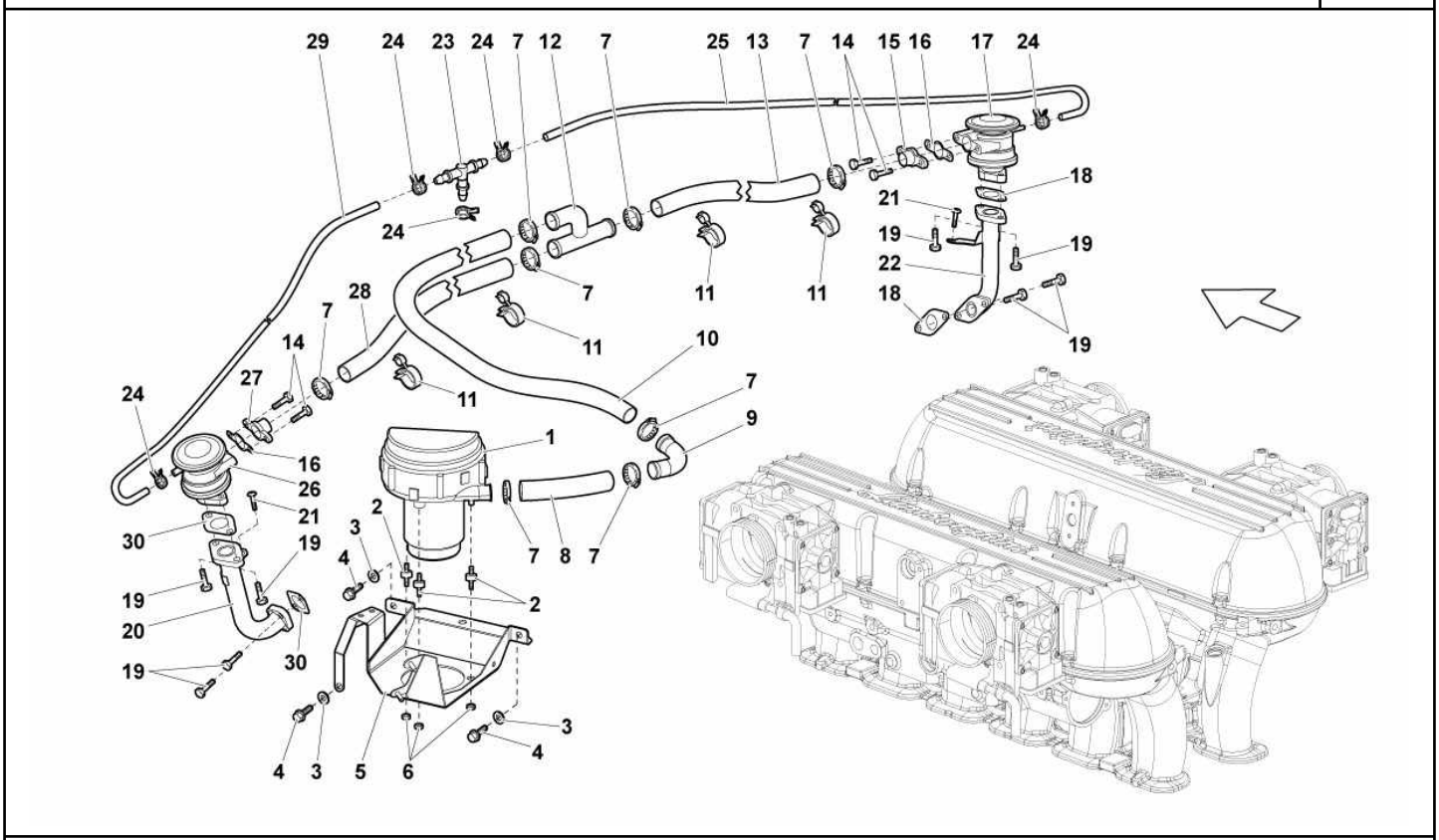

Ref.	Code	Q.ty	Description
1	078906601F	1	PUMP
2	400972081C	3	FLEXIBLE SUPPORT
3	WHT002961	3	WASHER
4	N 10718801	3	SCREW M6X16
5	410906613B	1	BRACKET
6	N 01508213	3	NUT
7	N 10255601	8	CLAMP
8	07M131371A	1	PIPE
9	07M131163	1	CONNECTOR
10	07M131149B	1	PIPE
11	N 10291602	4	CLAMP
12	07M131598	1	CONNECTOR
13	07M131611C	1	PIPE (LEFT)
14	N 10338903	4	SCREW M6X16
15	07L131585	1	PIPE FITTING (LEFT)
16	07L131358	2	GASKET
17	078131102L	1	PNEUMATIC VALVE (LEFT)
18	07M131354	2	GASKET (LEFT)
19	N 10338903	8	SCREW M6X16
20	07M131584A	1	RH PIPE
21	N 90638102	2	SCREW M6X12
22	07M131583A	1	LH PIPE
23	07L133579	1	CONNECTOR
24	400127217	5	CLAMP
25	07M131145A	1	PIPE
26	078131102L	1	PNEUMATIC VALVE (RIGHT-HAND)
27	07L131585	1	PIPE FITTING (RIGHT-HAND)
28	07M131611C	1	PIPE (RIGHT-HAND)

Model : Spare Parts MURCIELAGO SV LP 670-4 Market: USA MY 2010

Group : 131-EMISSION CONTROL SYSTEM

Table : 131.03.00-SECONDARY AIR SYSTEM

Ref.	Code	Q.ty	Description
29	07M131145A	1	PIPE
30	07M131354	2	GASKET (RIGHT-HAND)

Model : Spare Parts MURCIELAGO SV LP 670-4 Market: USA MY 2010

Group : 325-E-GEAR SYSTEM - MANUAL

Table : 325.01.00-GEARBOX CONTROL TOWER

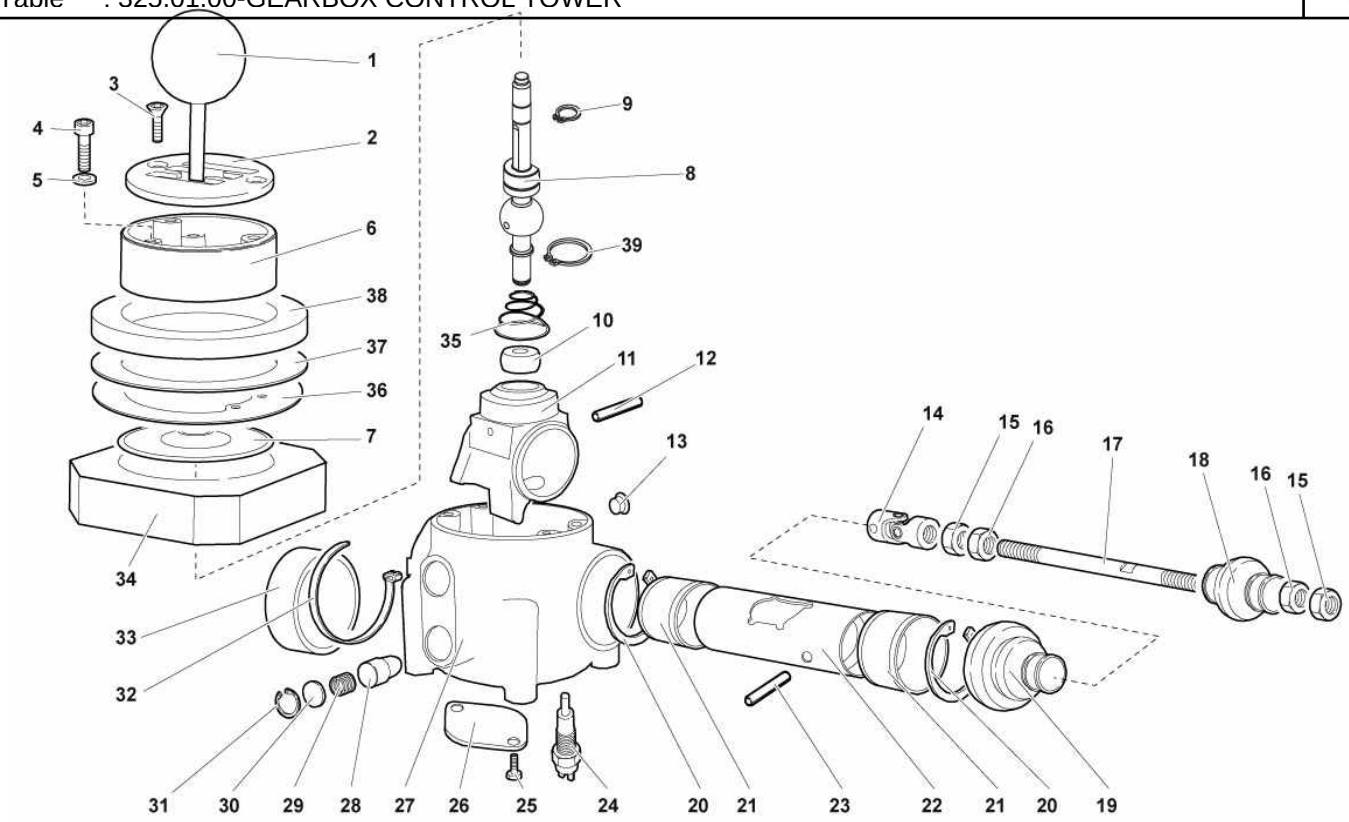

Ref.	Code	Q.ty	Description
1	410711141	1	HANDLE
2	410713109	1	SELECTOR PLATE
3	WHT003564	2	SCREW M6X22
4	N 10544302	4	SCREW M5X25
5	N 90247901	4	WASHER
6	410711795A	1	SPACER
7	410711527A	1	BOOT
8	410711123	1	LEVER
9	N 0124101	1	SEAL RING 10X1
10	410711189	1	BALL
11	410711111	1	SHIFT LEVER SEAT
12	WHT003590	1	PIN
13	410711514	1	FAIRLEAD.DKF6-9-12-3
14	410711613	1	LH JOINT
15	WHT003615A	2	RH NUT
16	WHT003616A	2	LH NUT
17	410711433A	1	TIE ROD
18	410711423	1	BOOT
19	410711411	1	BOOT
20	WHT003579	2	RETAINING RING
21	410711067	2	BUSHING
22	410711158	1	SHAFT
23	N 10738501	1	PIN
24	086941521A	1	SWITCH
25	N 0102018	2	SCREW M4X8
26	410711599	1	PLATE
27	410711061	1	SHIFT LEVER SUPPORT
28	410711039	2	PAWL

Model : Spare Parts MURCIELAGO SV LP 670-4 Market: USA MY 2010

Group : 325-E-GEAR SYSTEM - MANUAL

Table : 325.01.00-GEARBOX CONTROL TOWER

Ref.	Code	Q.ty	Description
29	410711490	2	SPRING
30	410711217A	2	DISK
31	WHT003576	2	SEAL RING
32	N 10267501	2	CLAMP
33	410711213	1	BOOT
34			PROTECTION (VALID UP TO MODEL YEAR 07)
35	410711369	1	SPRING
36	410711238	1	SPACER
37	410711353	1	INSULATION
38	410711296	1	INSULATION
39	WHT002646	1	SEAL RING 20X1.2

Model : Spare Parts MURCIELAGO SV LP 670-4 Market: USA MY 2010

Group : 311-GEARBOX SHIFTING RODS AND SHAFTS

Table : 311.01.00-GEARBOX SHIFTING RODS AND FORKS

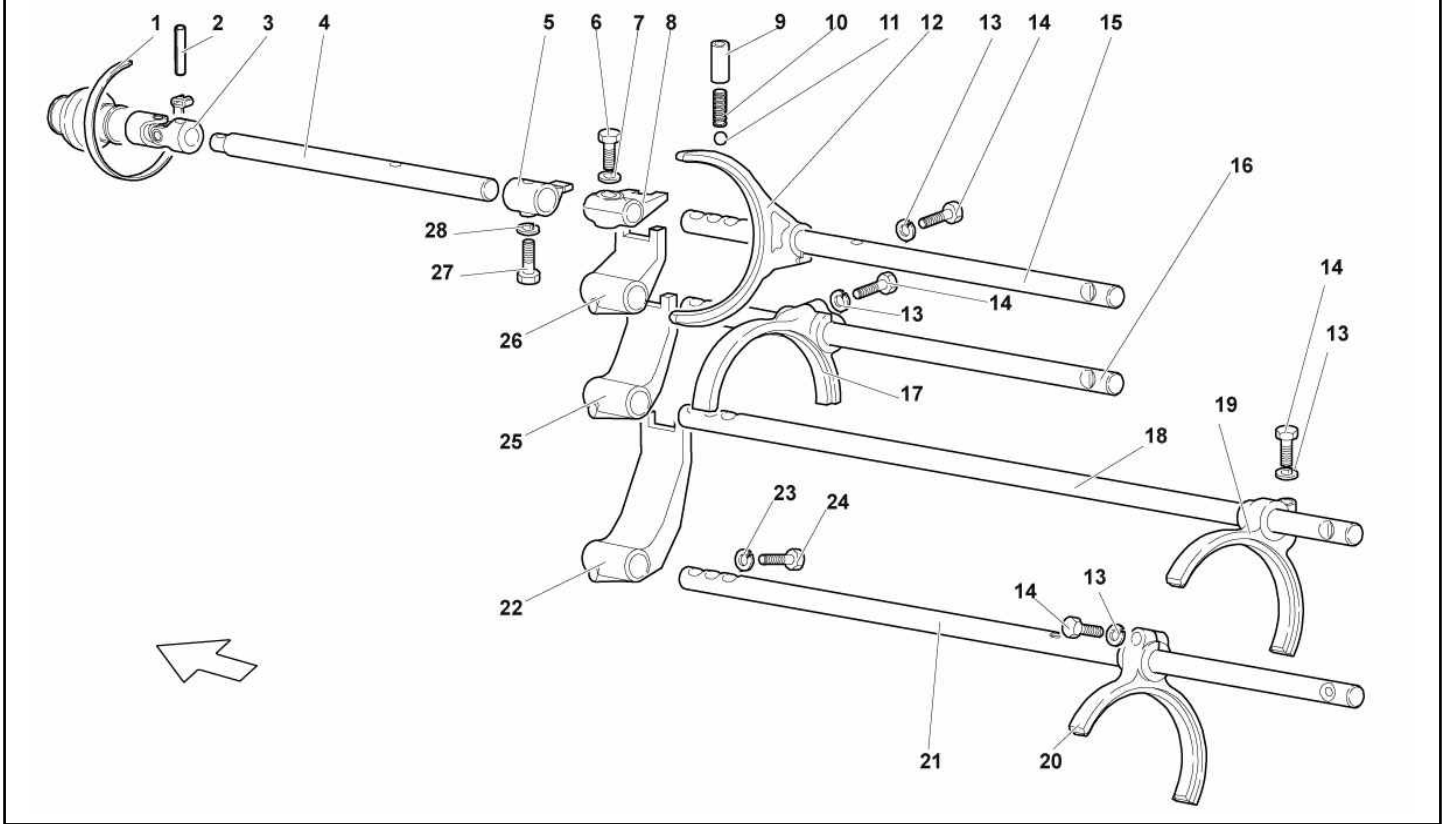

Ref.	Code	Q.ty	Description
1	008830305	2	CLAMP
2	N 0133481	1	PIN (MANUAL GEARBOX)
3			RH JOINT (BOÎTE DE VITESSE AUTOMATIQUE - SEE TABLE 325.02.00 - SEE REF. 23)
3	410711615	1	RH JOINT (MANUAL GEARBOX)
4	086311543C	1	GEAR LEVER (E-GEAR)
4	086311543B	1	GEAR LEVER (MANUAL GEARBOX)
5	086311998A	1	TOOTH (E-GEAR)
5	086311998	1	TOOTH (MANUAL GEARBOX)
6	WHT002952	3	SCREW
7	086311519	3	WASHER
8	086311111A	1	TOOTH (E-GEAR - 5ø-6ø)
8	086311111	1	TOOTH (MANUAL GEARBOX - 5ø-6ø)
9	086311511A	4	BUSHING
10	086311249	4	SPRING
11	N 10439201	4	BALL
12	086311564B	1	FORK (5ø-6ø)
13	WHT002955	4	WASHER
14	WHT002958	4	SCREW
15	086311700B	1	FIFTH-SIXTH GEAR LEVER
16	086311567	1	THIRD-FOURTH GEAR LEVER
17	086311561C	1	FORK (3ø-4ø)
18	086311557	1	FIRST-SECOND GEAR LEVER
19	086311551B	1	FORK (1ø-2ø)
20	086311571B	1	FORK (REVERSE GEAR)
21	086311823C	1	REVERSE GEAR CONTROL ROD
22	086311107C	1	TOOTH (E-GEAR - REVERSE GEAR)
22	086311107B	1	TOOTH (MANUAL GEARBOX - REVERSE GEAR)

Model : Spare Parts MURCIELAGO SV LP 670-4 Market: USA MY 2010

Group : 311-GEARBOX SHIFTING RODS AND SHAFTS

Table : 311.01.00-GEARBOX SHIFTING RODS AND FORKS

Ref.	Code	Q.ty	Description
23	086311443	1	WASHER
24	WHT002950	1	SCREW M6X24
25	086311785A	1	TOOTH (E-GEAR - 1ø-2ø)
25	086311785	1	TOOTH (MANUAL GEARBOX - 1ø-2ø)
26	086311771A	1	TOOTH (E-GEAR - 3ø-4ø)
26	086311771	1	TOOTH (MANUAL GEARBOX - 3ø-4ø)
27	WHT002950	1	SCREW M6X24
28	WHT001197A	1	WASHER

Model : Spare Parts MURCIELAGO SV LP 670-4 Market: USA MY 2010

Group : 881-SEATS AND SAFETY BELTS

Table : 881.02.00-SPORT SEATS

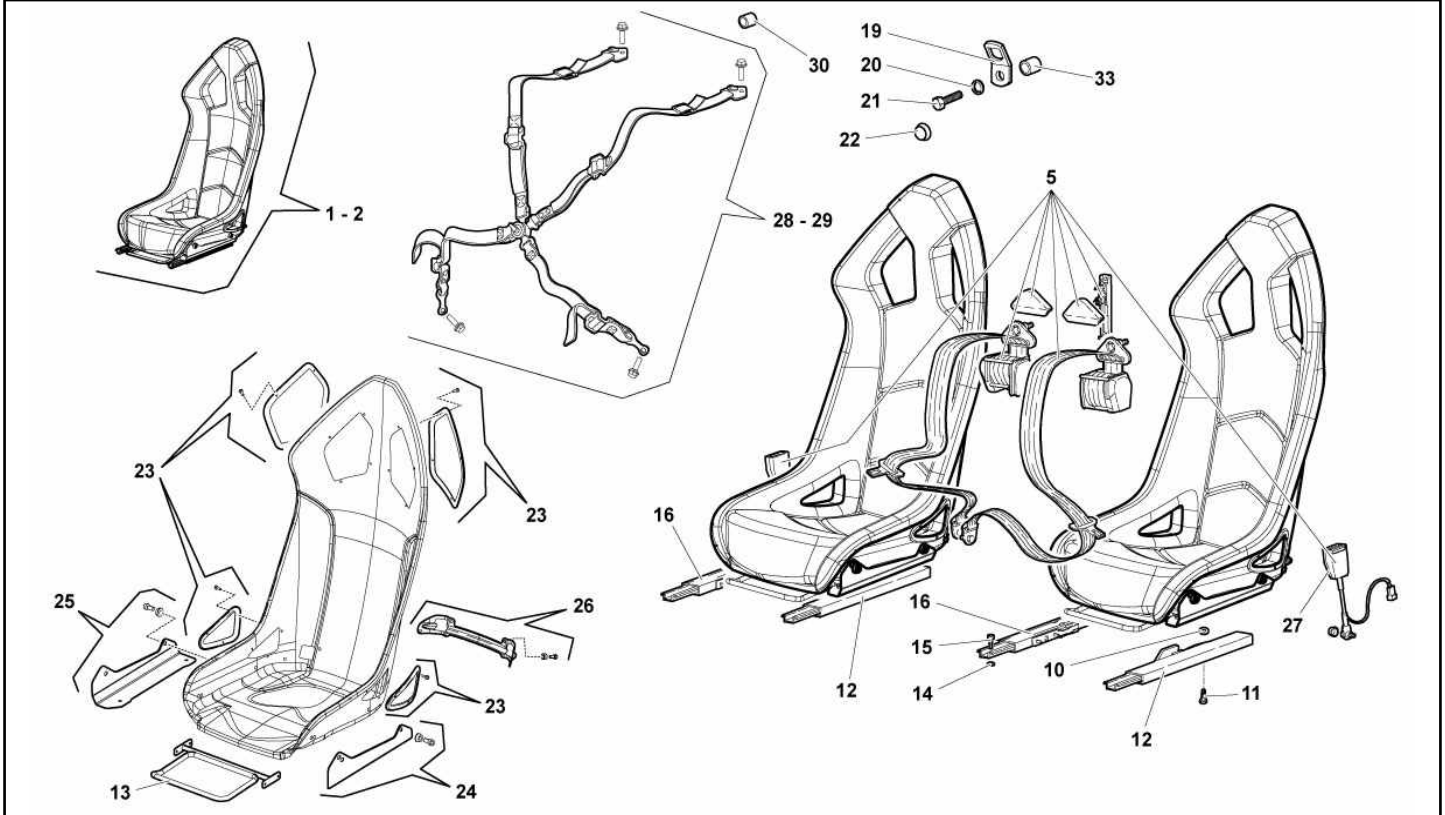

Ref.	Code	Q.ty	Description
1	410881003	1	LEFT SEAT (ALCANTARA UPHOLSTERY - SUPPLY VIN)
2	410881004A	1	RIGHT SEAT (ALCANTARA UPHOLSTERY - SUPPLY VIN)
5			ELECTRICALLY-CONTROLLED SEAT BELTS SET (SEE TABLE 881.01.00)
10			WASHER (SEE TABLE 881.01.00)
11			SCREW (SEE TABLE 881.01.00)
12			LH GUIDE (SEE TABLE 881.01.00)
13	410881093	2	SEAT LEVER
14			SPACER (SEE TABLE 881.01.00)
15			SCREW (SEE TABLE 881.01.00)
16			RH GUIDE (SEE TABLE 881.01.00)
19			CHILD RESTRAINT ANCHOR (SEE TABLE 881.01.00)
20			WASHER (SEE TABLE 881.01.00)
21			SCREW (SEE TABLE 881.01.00)
22			BELT SCREW CAP (SEE TABLE 881.01.00)
23			FRAME (CANNOT BE SOLD SEPARATELY)
24	410881537	2	LH GUIDE
25	410881538	2	RH GUIDE
26	410881747	1	BRACKET
27			BUCKLE (SEE TABLE 881.01.00)
28			SEAT BELT RH 4 POINTS (VALID FOR EUROPE MARKET)
29			SEAT BELT LH 4 POINTS (VALID FOR EUROPE MARKET)
30			SEAT BELT SPACER 4 POINTS (VALID FOR EUROPE MARKET)
33			BUSHING (SEE TABLE 881.01.00)

Model : Spare Parts MURCIELAGO SV LP 670-4 Market: USA MY 2010

Group : 911-STARTER

Table : 911.01.00-STARTER

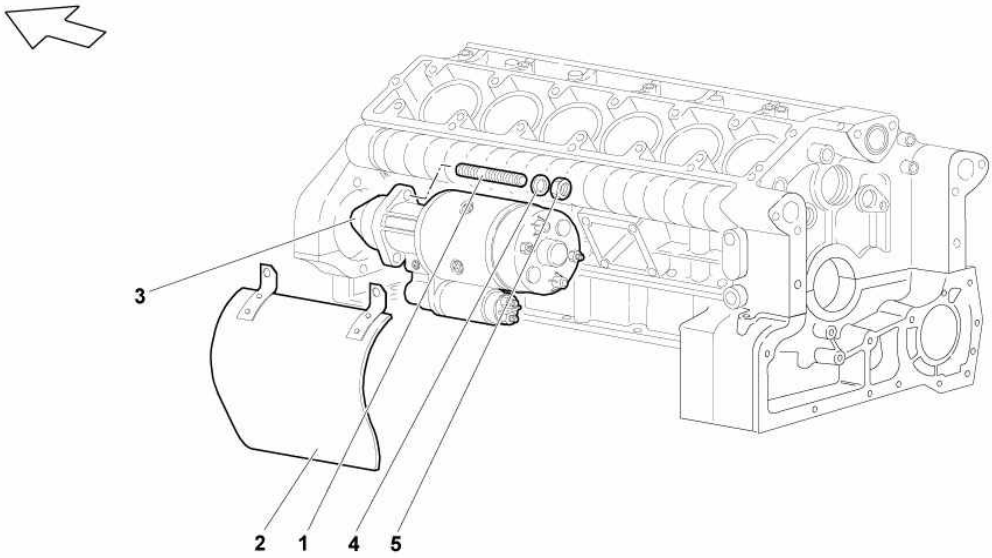

Ref.	Code	Q.ty	Description
1	WHT003039	2	STUD BOLT M12X48
2	07M911295	1	PROTECTION
3	07M911023	1	STARTER
4	WHT003055	2	WASHER
5	07M911094A	2	NUT

Model : Spare Parts MURCIELAGO SV LP 670-4 Market: USA MY 2010

Group : 953-STEERING

Table : 953.01.00-STEERING

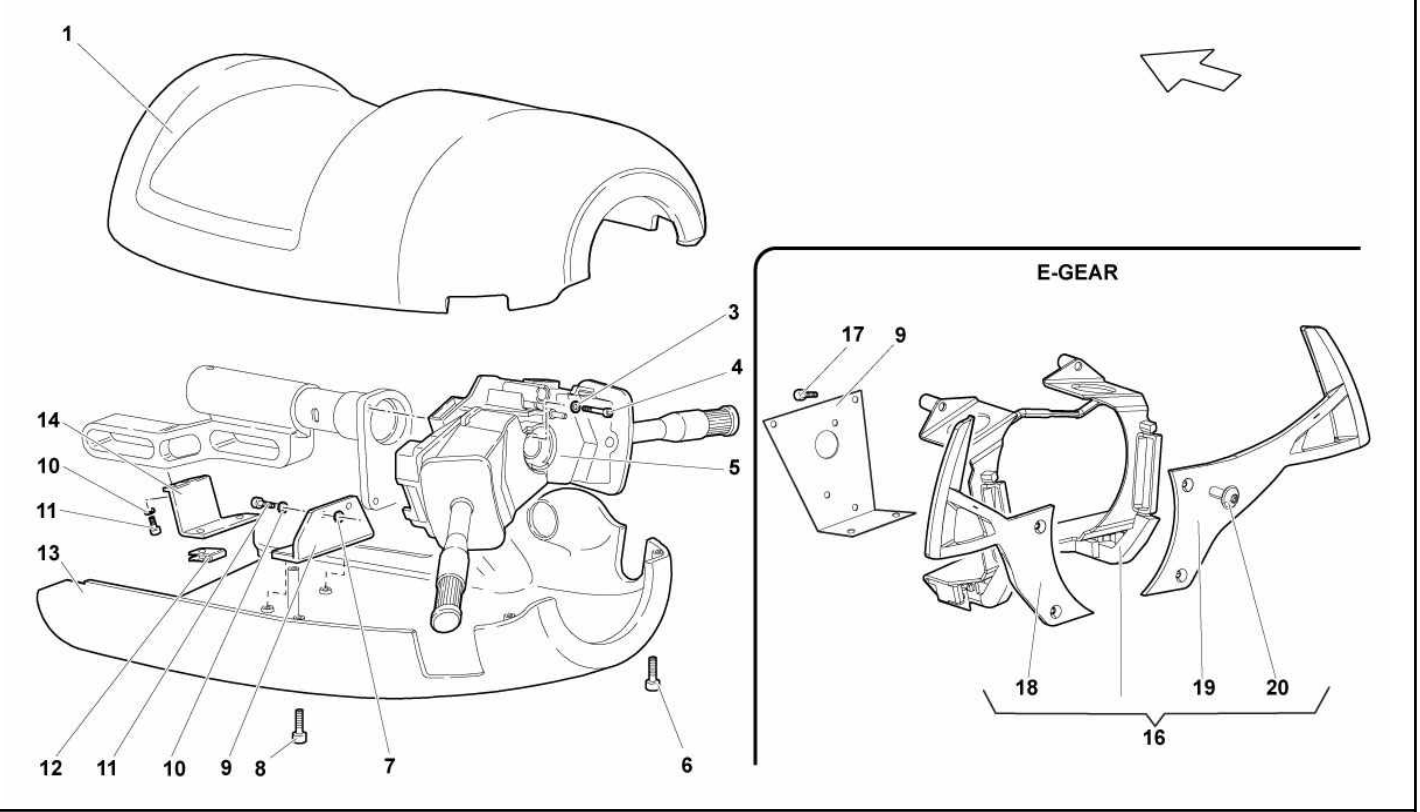

Ref.	Code	Q.ty	Description
1	410953515A	1	COVERING (E-GEAR)
1	410953515	1	COVERING (MANUAL GEARBOX)
3	WHT001187	2	WASHER
4	N 0447347	2	SCREW M5X16
5	410953513	1	AIR BAG RELEASE SELECTOR
6	N 10656302	4	SCREW
7			WASHER (VALID UP TO MODEL YEAR 07)
8	N 0902661	4	SCREW
9	410951269A	1	BRACKET (E-GEAR)
9	410422167A	1	BRACKET (MANUAL GEARBOX)
10	N 10612001	4	WASHER
11	N 10648502	4	SCREW M5X10
12	N 0154487	4	CLIP
13	410953516A	1	COVERING (E-GEAR)
13	410953516	1	COVERING (MANUAL GEARBOX)
14	410422168A	1	BRACKET
16	410951523B	1	E-GEAR PAD ASSEMBLY (CARBON INTERIOR DARK)
16	410951523A	1	E-GEAR PAD ASSEMBLY
17	N 10544302	3	SCREW M5X25
18	410951527B	1	LEFT LEVER (CARBON INTERIOR DARK)
18	410951527	1	LEFT LEVER
19	410951528B	1	RIGHT LEVER (CARBON INTERIOR DARK)
19	410951528	1	RIGHT LEVER
20	WHT003067	4	SCREW M4X10 (CARBON INTERIOR)
20	WHT003308	4	SCREW M4X8 (STANDARD)

Model : Spare Parts MURCIELAGO SV LP 670-4 Market: USA MY 2010

Group : 419-STEERING

Table : 419.01.00-STEERING

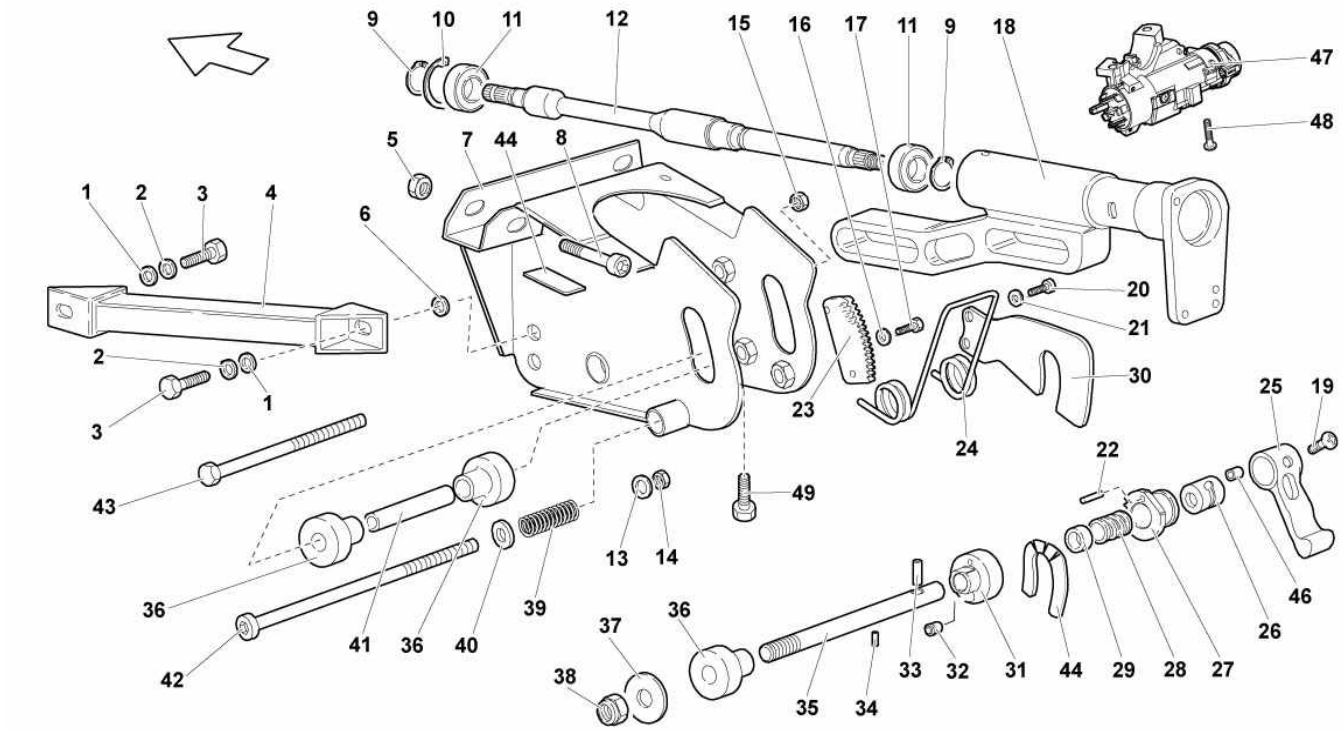

Ref.	Code	Q.ty	Description
1	N 90179103	2	WASHER 18X8,4X2,5
2	WHT000771	2	WASHER
3	N 01024032	2	SCREW M8X20
4	417419281A	1	STRUT
5	N 10609202	2	NUT M8
6	410407295	1	ADJUSTMENT SHIM
7	417419087A	1	SUPPORT
8	N 10651701	2	SCREW M8X45
9	WHT002646	2	RETAINING RING
10	WHT002647	1	RETAINING RING
11	410419905	2	BEARING
12	410419967A	1	SHAFT
13	WHT000771	1	WASHER
14	N 01100845	1	NUT M8
15	N 01100845	1	NUT M8
16	WHT001187	2	WASHER
17	N 0447347	2	SCREW M5X16
18	410419561A	1	STEERING COLUMN SUPPORT (E-GEAR)
18	410419561	1	STEERING COLUMN SUPPORT (MANUAL GEARBOX)
19	WHT003308	2	SCREW M4X8
20	N 10580702	2	SCREW M5X8
21	N 10612001	2	WASHER
22	N 10692901	1	PIN
23	410419301	1	TOOTHED STRIKER
24	410419341	1	SPRING
25	410419355	1	LEVER
26	410419202	1	SLEEVE
27	410422283	1	TOOTHED TAPPET

Model : Spare Parts MURCIELAGO SV LP 670-4 Market: USA MY 2010

Group : 419-STEERING

Table : 419.01.00-STEERING

Ref.	Code	Q.ty	Description
28	410419209	1	SPRING
29	410419758	1	WASHER
30	410419522A	1	COVER
31	410419588	1	SPACER
32	410419811A	1	POSITION BALL
33	N 10693001	1	PIN
34	WHT003591	1	PIN
35	410419645A	1	JOURNAL
36	410419588A	3	SPACER
37	410407295D	1	WASHER
38	N 90635001	1	NUT M12
39	410419598	1	SPRING
40	N 01152427	1	WASHER
41	410419331B	1	BUSHING
42	WHT003070	1	SCREW M6X90
43	N 01037511	1	SCREW M8X75
44	410419780	1	GASKET
46	410419811	1	POSITION BALL
47	4B0905851Q	1	IGNITION SWITCH SET
48	410905133	2	SCREW M8X22
49			SCREW M8X20 (VALID FOR A DIFFERENT MODEL)

Model : Spare Parts MURCIELAGO SV LP 670-4 Market: USA MY 2010

Group : 422-POWER STEERING

Table : 422.02.00-STEERING RACK

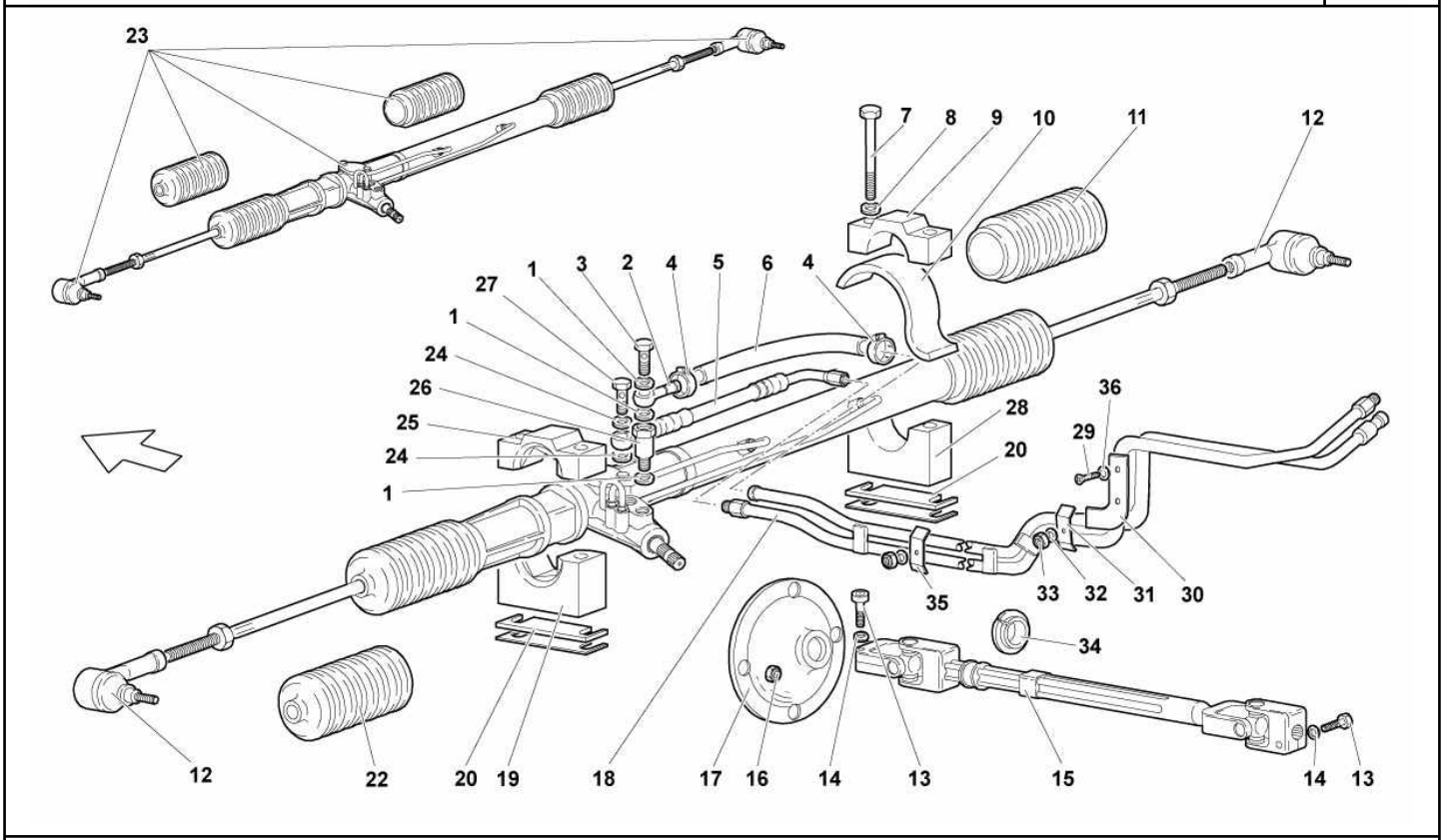

Ref.	Code	Q.ty	Description
1	N 0138481	3	WASHER
2	413422247A	1	CONNECTOR
3	400422279A	1	SCREW WITH HOLE
4	N 0245097	2	CLAMP
5	413422895A	1	PIPE
6	410422890A	1	PIPE
7	N 10576802	4	SCREW M10X105X26
8	N 0122115	4	WASHER
9	410422761A	1	U-BOLT
10	400422850	1	RUBBER SHIM
11	410419831	1	BOOT
12	004334555	1	BALL JOINT COUPLING
13	WHT003310	2	SCREW
14	410422395	2	WASHER
15	410419515A	1	JOINTED SHAFT
16	N 01100637	4	NUT
17	410422326	1	GASKET
18	410422867C	1	PIPE (E-GEAR)
18	410422867B	1	PIPE (MANUAL GEARBOX)
19	410422761	1	SUPPORT
20	410422127A	4	1.0 MM ADJUSTMENT SHIM
22	410419831	1	BOOT
23	413422061C	1	POWER STEERING RACK
24	N 0138492	2	WASHER
25	410422874	1	U-BOLT
26	410422293B	1	CONNECTOR
27	400422269A	1	SCREW WITH HOLE
28	410422873	1	SUPPORT

Model : Spare Parts MURCIELAGO SV LP 670-4 Market: USA MY 2010

Group : 422-POWER STEERING

Table : 422.02.00-STEERING RACK

Ref.	Code	Q.ty	Description
29	N 0102649	2	SCREW M5X20
30	410422078	1	SHEET
31	410422477A	2	PLATE
32	N 10612001	2	WASHER
33	N 0211963	2	NUT M5
34	410419548	1	BUSHING
35	410422477A	1	PLATE
36	N 0115124	2	WASHER

Model : Spare Parts MURCIELAGO SV LP 670-4 Market: USA MY 2010

Group : 419-STEERING

Table : 419.02.00-STEERING

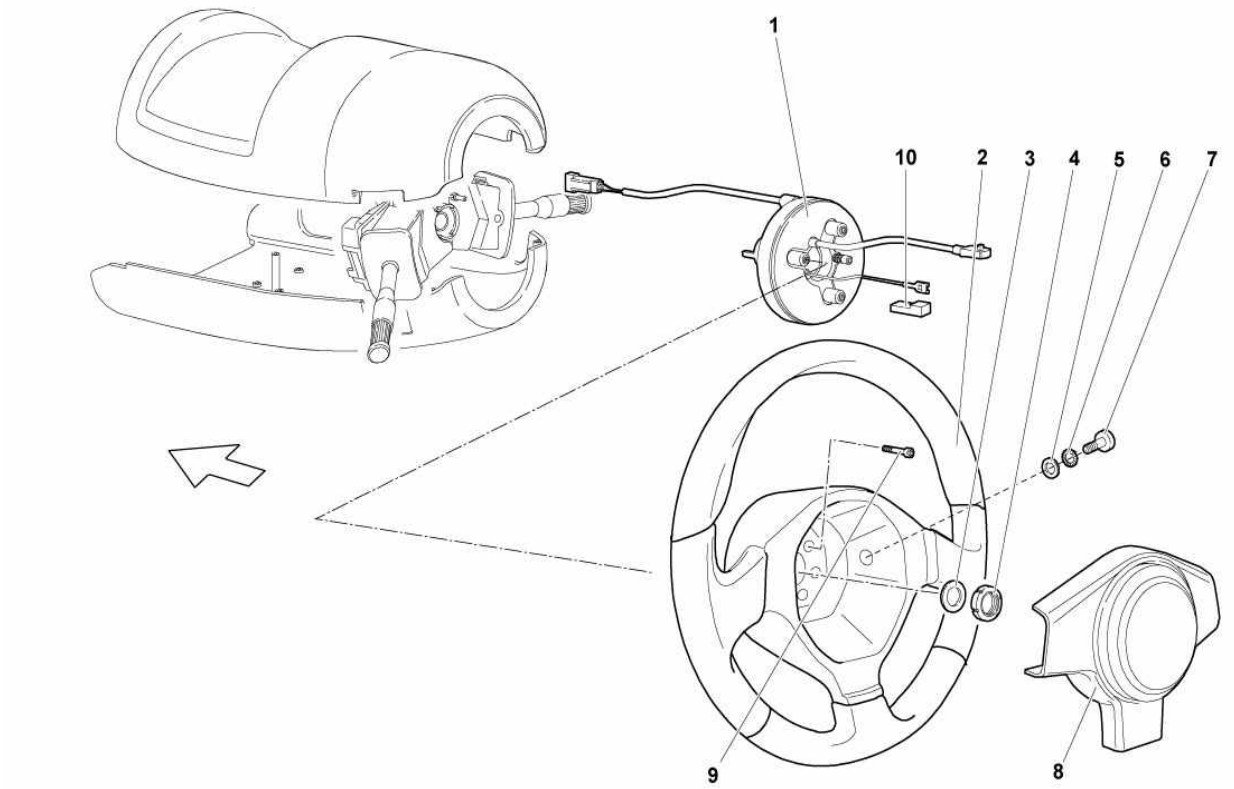

Ref.	Code	Q.ty	Description
1	410419661	1	PIGTAIL CONNECTION
2	410419091J	1	STEERING WHEEL LEATHER (STANDARD)
2	410419091H	1	STEERING WHEEL PERFORATED LEATHER (STANDARD)
2	410419091L	1	STEERING WHEEL PERFORATED LEATHER/CARBON DARK
2	410419091M	1	STEERING WHEEL SUEDE (SPORT)
2	429419091	1	STEERING WHEEL SUEDE/CARBON DARK
2	410419091K	1	STEERING WHEEL/CARBON DARK
3	WHT003106	1	WASHER
4	WHT003099	1	RING NUT
5	WHT003053	2	WASHER
6	N 01152427	2	WASHER
7	N 90612002	2	SCREW
8	410880201	1	AIR BAG MODULE
9	WHT003088	3	SCREW
10	410971589A	1	CONNECTOR

Model : Spare Parts MURCIELAGO SV LP 670-4 Market: USA MY 2010

Group : 905-SYSTEM IGNITION

Table : 905.01.00-SYSTEM IGNITION

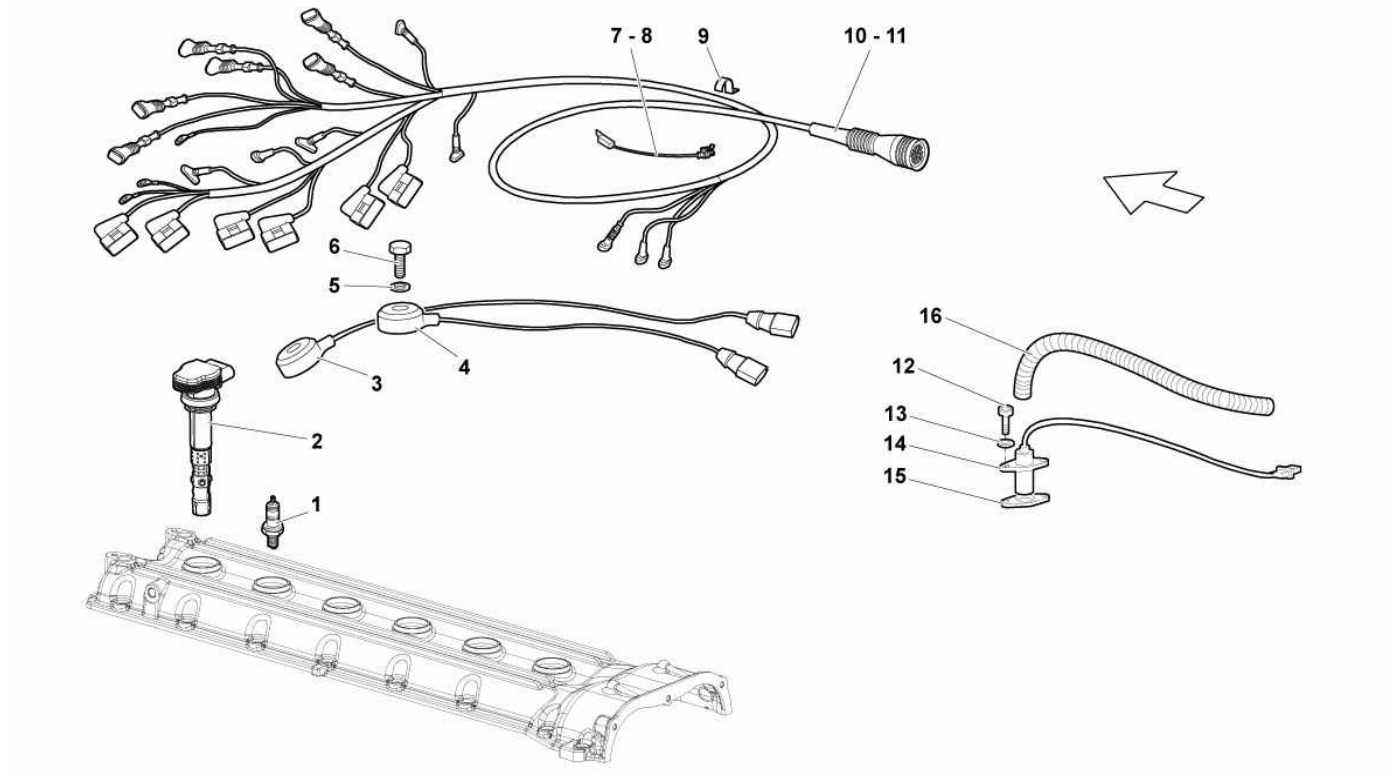

Ref.	Code	Q.ty	Description
1	410905619	12	SPARK PLUG
2	07M905115B	12	COIL
3	07M905377A	2	SENSOR
4	07M905377	2	SENSOR
5	WHT002962	4	WASHER
6	N 10518402	4	SCREW M8X30
7	400971164	1	WIRING HARNESS (WIRING HARNESS 1-6)
8	400971164	1	WIRING HARNESS (WIRING HARNESS 7-12)
9	410868630A	4	SUPPORT
10	07M971087C	1	WIRING HARNESS 1-6
11	07M971088C	1	WIRING HARNESS 7-12
12	N 10648502	2	SCREW M5X10
13	N 90247901	2	WASHER
14	07M905381	1	FLYWHEEL TIMING SENSOR
15	07M103899	1	ADJUSTMENT SHIM 0,2 MM (0,2 MM)
15	07M103899A	1	ADJUSTMENT SHIM 0,4 MM (0,4 MM)
16	07M905387	1	PROTECTION

Model : Spare Parts MURCIELAGO SV LP 670-4 Market: USA MY 2010

Group : 109-TIMING SYSTEM

Table : 109.03.00-HEAD TIMING SYSTEM

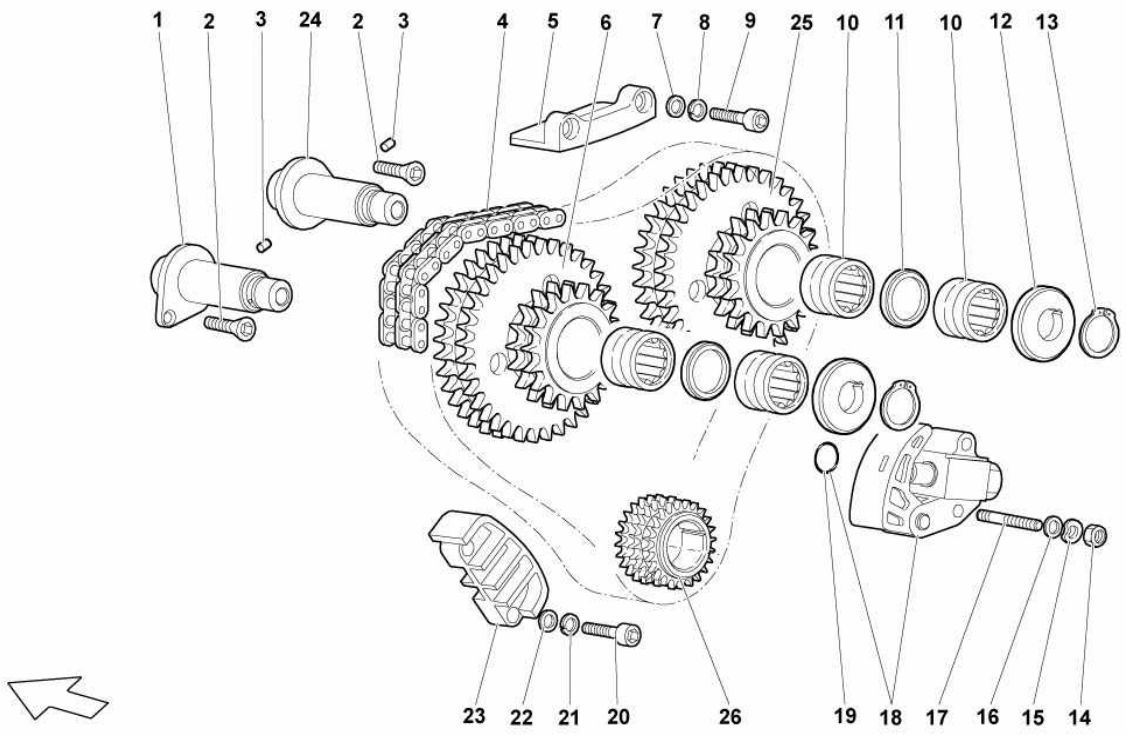

Ref.	Code	Q.ty	Description
1	07M109225	1	JOURNAL
2	WHT003068	2	SCREW M6X16
3	WHT003082	2	DOWEL
4	07M109229	1	LOWER TIMING CHAIN
5	07M109201	1	GUIDE
6	07M109569	1	GEAR
7	WHT003543	2	WASHER
8	WHT001397	2	WASHER
9	WHT003072	2	SCREW
10	410109403	4	BEARING
11	07M109135	2	SPACER
12	07M109163	2	WASHER
13	WHT002646	2	RETAINING RING
14	N 01100637	2	NUT
15	WHT001197	2	WASHER
16	N 01152427	2	WASHER
17	WHT003026	2	STUD BOLT
18	07M109077A	1	CHAIN TIGHTENER WITH SEAL RING
19	WHT003060	1	SEAL RING
20	WHT003071	2	SCREW
21	WHT001397	2	WASHER
22	WHT002962	2	WASHER
23	07M109203	1	GUIDE
24	07M109225	1	JOURNAL
25	07M109569	1	GEAR
26		1	GEAR (SEE TABLE 105.01.00 - 11)

Model : Spare Parts MURCIELAGO SV LP 670-4 Market: USA MY 2010

Group : 863-PASSENGER COMPARTMENT TRIMS

Table : 863.09.00-TUNNEL

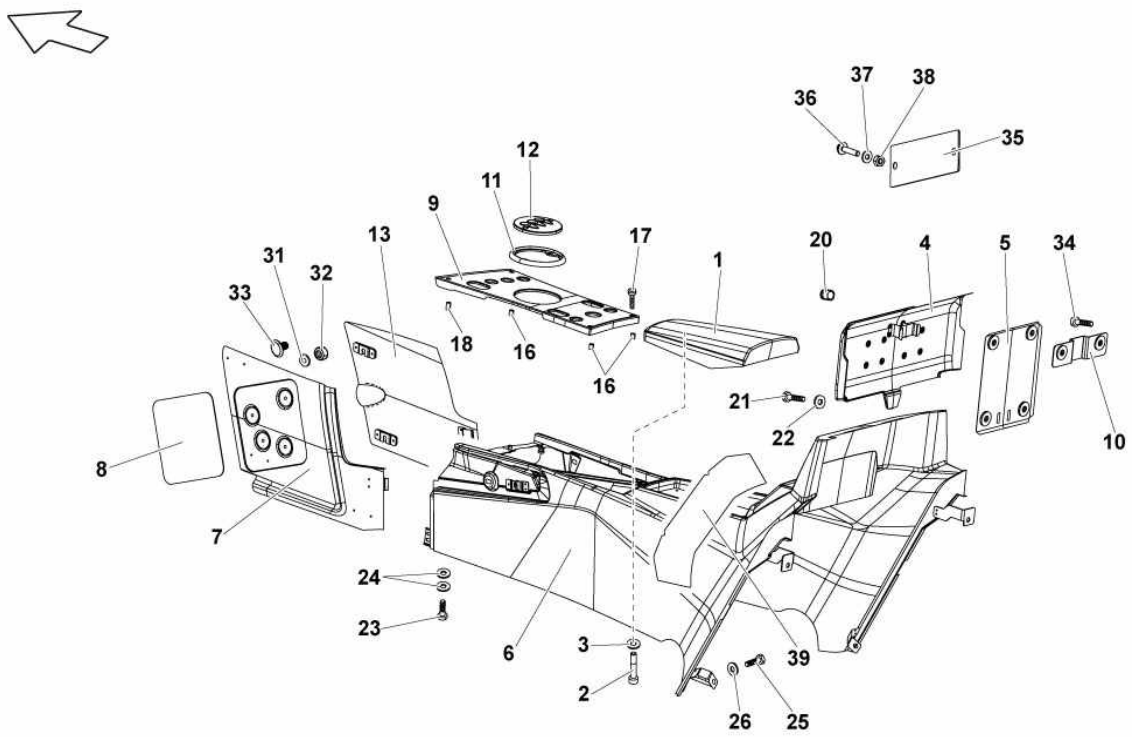

Ref.	Code	Q.ty	Description
1	429864263	1	ARMREST CUSHION ASSEMBLY (ALCANTARA UPHOLSTERY - SUPPLY VIN)
2	WHT003088	4	SCREW M4X16
3	N 10663401	4	WASHER
4	418858670A	1	SAFETY BELT ROLLING UP DEVICE COVER ASSEMBLY (WITH 3 POINTS STICHING)
4	429858670	1	SAFETY BELT ROLLING UP DEVICE COVER ASSEMBLY (WITH 4 POINTS STICHING)
5	410857350	1	SHEET (WITH 3 POINTS STICHING)
6	429863242	1	TUNNEL COVER ASSEMBLY (WITH 3 POINTS STICHING)
6	429863242D	1	TUNNEL COVER ASSEMBLY (WITH 3 POINTS STICHING - I-POD - USB)
6	429863242A	1	TUNNEL COVER ASSEMBLY (WITH 4 POINTS STICHING)
6	429863242E	1	TUNNEL COVER ASSEMBLY (WITH 4 POINTS STICHING - I-POD - USB)
7	413863667B	1	TUNNEL LEFT FRONT SIDE COVER ASSEMBLY (ALCANTARA UPHOLSTERY - SUPPLY VIN)
8	413868681	1	PLATE
9	429863315A	1	ORNAMENT (E-GEAR)
9	429863315	1	ORNAMENT (MANUAL GEARBOX)
10	429857350	1	BRACKET (WITH 4 POINTS STICHING)
11	410713221	1	FRAME (E-GEAR)
11	410711139	1	FRAME (MANUAL GEARBOX)
12	400713110D	1	SELECTOR (E-GEAR)
13	413863668B	1	TUNNEL RIGHT FRONT SIDE COVER ASSEMBLY
16	429861864	3	SPACER 10MM
17	WHT004801	4	SCREW M4X22
18	429862525	1	SPACER 15MM
20	410919242	1	LED FRAME
21	WHT003114	1	SCREW

Model : Spare Parts MURCIELAGO SV LP 670-4 Market: USA MY 2010

Group : 863-PASSENGER COMPARTMENT TRIMS

Table : 863.09.00-TUNNEL

Ref.	Code	Q.ty	Description
22	N 90840802	8	WASHER
23	WHT003069	2	SCREW M6X20
24	WHT003040	4	WASHER
25	WHT003069	4	SCREW M6X20
26	WHT002961	4	WASHER
31	N 91109201	4	WASHER
32	WHT002959	4	NUT M4
33	400863119	5	PLUG
34	N 90166803	2	SCREW M8X28 (WITH 4 POINTS STICHING)
35	429010545	1	CAR NUMBER PLATE (SUPPLY VIN)
36	WHT003067	2	SCREW M4X10
37	N 01152221	2	WASHER
38	WHT002959	2	NUT M4
39	429863145	1	LH PROTECTION (WITH 3 POINTS STICHING)
39	429863146	1	RH PROTECTION (WITH 3 POINTS STICHING)

Model : Spare Parts MURCIELAGO SV LP 670-4 Market: USA MY 2010

Group : 121-WATER COOLING SYSTEM

Table : 121.01.00-WATER PUMP

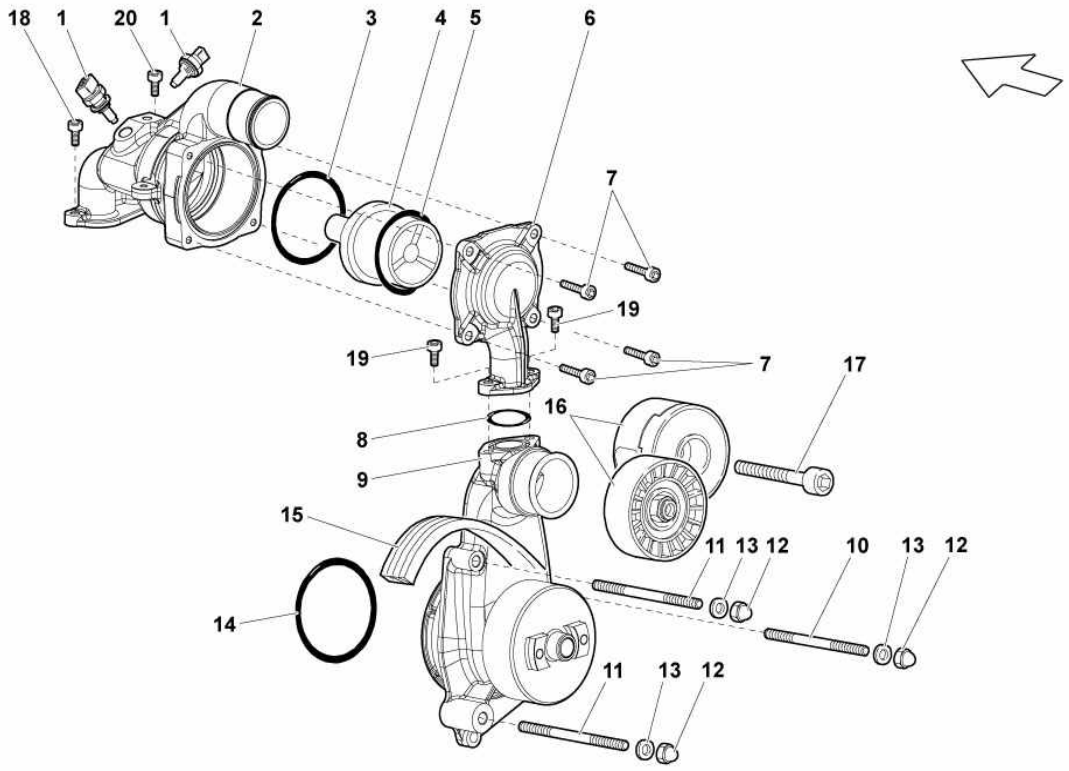

Ref.	Code	Q.ty	Description
1	07L919501A	2	WATER TEMPERATURE SENSOR
2	07M121115B	1	WATER THERMOSTAT BODY
3	WHT002133	1	SEAL RING
4	07M121113	1	WATER THERMOSTAT
5	07M121041	1	RING
6	07M121121C	1	WATER COLLECTING BODY FROM HEADS
7	N 10124308	4	SCREW M6X20
8	WHT003062	1	SEAL RING
9	07M121011D	1	WATER PUMP
10	WHT003030	1	STUD BOLT M8X90
12	N 01118410	3	NUT
13	WHT002962	3	WASHER
14	WHT003018	1	SEAL RING
15	07M903137A	1	BELT
16	07M109485	1	GUIDE PULLEY
17	N 10667901	1	SCREW M10X55
18	N 01021626	1	SCREW M6X18
19	N 01021626	2	SCREW M6X18
20	N 01021626	1	SCREW M6X18

Congratulations on your Lamborghini Diagnostic system purchase.

Your new system includes the following items below. EACH system is checked 4 TIMES before leaving our facility and sealed. A Digital picture is taken for EACH system as well as the shipment weight before leaving. All serial numbers are recorded and logged. You are responsible for checking that you have received ALL the items below. If ANY single item is missing, an insurance claim will have to be filed with the corridor for the full insured/declared amount and will unfortunately delay your use as an inspector from the courier will have to see the equipment packing list and shipping container. This has never been a problem in the past, however it is still important to note as every piece of this shipment is part of the entire assembly of the Diagnostic system.

PACKING LIST

1. Panasonic CF-52 Toughbook Laptop system with Power Cord
2. Laras-AS Interface (Black Box with rounded end)
3. Laras-AS CABLE - 15 Pin to OBD – LaRA & ABS/Airbag Cable for Murcielago (BLUE END)
4. Laras-AS CABLE - 15 Pin to OBD – LaRA Gallardo Cable 2009 and Newer
5. Laras-AS CABLE - 15 Pin to OBD - LaRA Gallardo Cable 2008 & Under
6. LDAS32 USB Interface with 9 Pin to CAN cable
7. ABS/Airbag Interface (Black Square box) with 9 Pin Serial Cable
8. Marx Crypto Box decoder (USB KEY)
9. System Recovery CD
10. 16GB USB Thumb drive
11. Pelican 1600 Hardware storage case

** If you have purchase portal access or other programmers, this will be included in the shipment but listed separately on the packing list.

Panasonic CF-52

Your Diagnostic PC is pre-configured. Please treat this PC as a diagnostic tool and NOT a laptop/computer. It is not to be used for any other computing needs except to operate the Diagnostic function programs. Do not attempt to install any other 3rd party programs, copy or delete any files or programs or connect to the internet. Failure to follow this requirement will VOID any support, warranty or replacement. All activity is logged to ensure compliance.

Your laptop includes a Diagnostic User account using the username: **lambo** and password: **lambo** There is a Diagnostic Administrative logon that is for internal use only. The system is configured to boot and log on to the diagnostic user account automatically. You are not permitted to log on to any other accounts and any attempts are logged. You will not need to access any other accounts to operate any of the Diagnostic programs; it is for maintaining the system's integrity and for servicing.

The most important reminder of this system is that although this is the SAME exact tool provided to Lamborghini dealerships, **this system is NOT authorized or supported by Lamborghini**. It was assembled to help independent repair facilities and other non-authorized outlet to be able to perform the same dealer functions. It is possible that this equipment could be confiscated if its existence was known by Lamborghini or any of the software vendors. Until independent software is developed, you must keep your system secured by your own trusted authorized personnel.

All operating software uses an encrypted license file that is TIED to your Laptop. This software will NOT function in any other PC or Laptop. Furthermore the Lara-AS software license expires on December 31 2009. To bypass this limitation unless we have a new license file update for you, you have been given a special restore disk software (Norton Ghost 14) along with this and the system restore file located on your laptop, you can reset your BIOS system date to April 1st 2009 and then use the system restore to re-activate the software. You MUST have the CryptoBox Key inserted to perform the restore. A separate password for the encryption of this image file is provided if and when you need to access this restore feature. Separate Directions included.

As previously mentioned, the Laptop provided to operate the diagnostic software is not to be used for any other function. When your system leaves the manufacture, it is Pre-Configured and tested. We do not provide any operating system support or any other software support outside of running the Lamborghini software and related equipment. The system is setup so that internet access is capable as the wireless and internal NIC are DHCP enabled, however we strongly advise against its use to prevent any spyware or viruses from entering your system. No antivirus software is loaded as in our tests have caused software conflicts. It is your responsibility for teaching and learning of the system's diagnostic tools and software. We strongly suggest a membership to the Independent Service Portal as all of the required instructions and training materials are located here.

CryptoBox USB Key:

The Silver USB Key MUST be plugged into the CF-52 Laptop's USB port, in order to operate any of the Diagnostic programs. We recommend that you keep this key **VERY** secure or permanently attached to the laptop. If this key is damaged, lost or stolen, you will be required to send your laptop, Lara-AS, LDAS and ABS/Airbag interfaces back to issue a new hardware key. This service costs a MINIMUM 5000 - 7000 EURO plus shipping expenses for the re-programming. If you also have portal access, you may have another Key, however this key is NOT the same used for the Diagnostic system.

Cables & Other included hardware:

Your new system includes all the necessary cables and hardware to run all of the Lamborghini related software. Please treat these additional hardware components with care and security. Replacement cables MUST be exchanged / purchased from your ORIGINAL distributor NOT from another Lamborghini dealership or location. These cables are engineered differently and ANY other cables used could damage the Laptop, Interface boxes or the vehicle being connected to. The system is sold as a complete diagnostic assembly. Additional cables or interfaces are NOT sold separately, It is your responsibility to ensure all pieces of this system are secure, as any one item that is lost or stolen could require another separate purchase of the entire system. You can purchase replacement parts, providing the damaged one(s) are returned and they are available at the time you need them.

LarAS-AS:

The Lara-AS hardware includes the Black interface box and 3 (THREE) - 15 pin to OBD connector cables. They are marked accordingly and are color coded with heat shrink tubing on the opposite end. It is important that you understand the usages of the cables.

1. Laras-AS CABLE - 15 Pin to OBD – LaRA & ABS/Airbag Cable for Murcielago (BLUE END)
   This is a DUAL use cable used with the LaRA-AS interface and the ABS/Airbag interface (Explained later) For the LaRA-AS this cable is used on **ALL Murcielago's and ALL years**. It is connected to the LaRA-AS interface using the 15 pin connector. The 9 pin serial cable from the Interface is connected to the Laptops rear and the OBD connector to the car's OBD plug.

2. Laras-AS CABLE - 15 Pin to OBD – LaRA Gallardo Cable 2009 and Newer (WHITE END)
   This cable is used on ALL Gallardo manufactured **2009 and after**. It is connected to the LaRA-AS interface using the 15 pin connector. The 9 pin serial cable from the Interface is connected to the Laptops rear and the OBD connector to the car's OBD plug.

3. Laras-AS CABLE - 15 Pin to OBD - LaRA Gallardo Cable 2008 & Under (YELLOW END)
   This cable is used on ALL Gallardo manufactured from **2002 to 2008**. It is connected to the LaRA-

AS interface using the 15 pin connector. The 9 pin serial cable from the Interface is connected to the Laptops rear and the OBD connector to the car's OBD plug.

ABS/Airbag Interface

The Diablo & Murcielago's require this separate interface. It consists of the small black rectangular interface with a switch and a 9 pin and 15 pin port. You will connect the 9 pin serial cable from the Laptop to the interface and then the "Laras-AS CABLE - 15 Pin to OBD – LaRA & ABS/Airbag Cable for Murcielago (**BLUE END**)" from the interface to the car's OBD connector. You will use the ABS or Airbag software in accordance to the service manual directions and move the switch either to ABS or AirBag. *Note the Gallardo uses the LaRA software and cables for ABS & Airbag diagnostics.

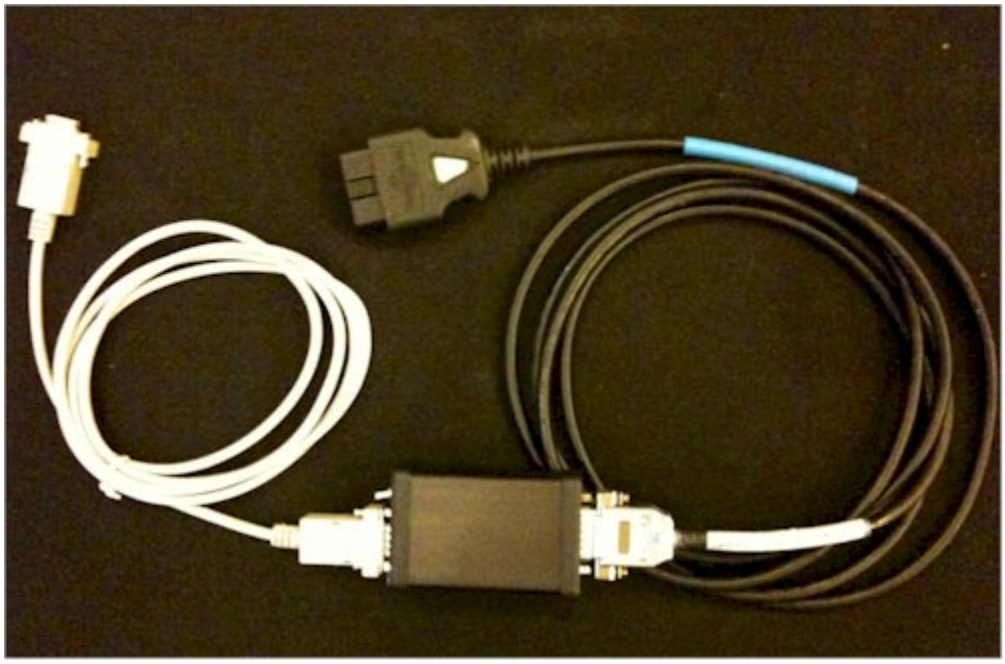

LDAS-32 Interface

The Diablo, Gallardo and Murcielago's use the 8" USB CAN interface assembly. This should already be connected by the manufacture; however it consists of a 9 pin serial to CAN plug cable and the 7" USB interface. You will use the LDAS software for all functionality.

System Recovery CD & USB Thumb drive

Although we have tried to eliminate accidental user errors and file deletion by limiting the operating system functionality, there may be a time where you may need to restore the system back to the original state. The recovery CD and ALL included parts of this system should be kept together at all times, including the CD and Thumb drive OR in a very secure location that is easily accessible. If you are on a service plan or a membership access to the portal, software updates are distributed using your USB Thumb drive. The USB Thumb drive holds a backup image of your diagnostic system. It is NEVER to be placed in another computer or the image copied from the thumb drive. It is programmed to work ONLY with the serial number of your laptop and only in recovery mode. Failure to follow these instructions will

result in IMAGE corruption and will require the key and re-programming cost similar to the CryptoBox Key. Each usage AND file access is logged in a memory hex. If it is determined that a different CPU ID is detected from another laptop or computer, this will VOID ALL future support or contact from the manufacture. The Image file is Encrypted and password protected. The password will be provided as needed on a case by case basis. Please understand these security measures are in place to protect your system from unauthorized use and to protect your investment as well as the manufacture.

Pelican 1600 Hardware storage case

To protect your investment we are adding a Pelican 1600 Protector Hard Case. It is an unbreakable, watertight, airtight, dustproof, chemical resistant and corrosion proof case. The Case is made of Ultra High Impact structural copolymer includes 1/4" (6.4 mm) neoprene o-ring and ABS latches seal perfectly and includes an automatic purge valve for quick equalization after changes in atmospheric pressure. Pelican Dry Boxes 1600 are NATO codified

SYSTEM RESTORE PROCEEDURE

To ensure a trouble free process, please follow the instructions EXACTLY

1. Ensure the CryptoBox USB Key and the 16GB Thumb drive is connected to the Right side USB ports on the Laptop and the Laptop is TURNED OFF

2. TURN ON THE LAPTOP

3. Enter BIOS by hitting F2 at start up. Change the SYSTEM DATE to **April 2, 2009**
   Use the Arrow Key to tab to the MAIN tab in the BIOS
   Hit the DOWN arrow to highlight the System Date
   Hit the TAB to highlight the Date and change to 2009.
   Hit the TAB to highlight the DAY and change to 1
   Hit the TAB to highlight the MONTH and change to 3

   This is important to maintain the use of the limited special Lamborghini License to use the LARA.
   ** Although it should already be set, the BOOT order should have the Optical drive selected as the 1st booting device.

4. Insert your Recovery CD into the CD-Rom drive.
5. Hit the RIGHT arrow to EXIT and select the Save Values & Exit. This will reboot the system
6. When asked to hit any key to boot from CD-Rom hit ENTER

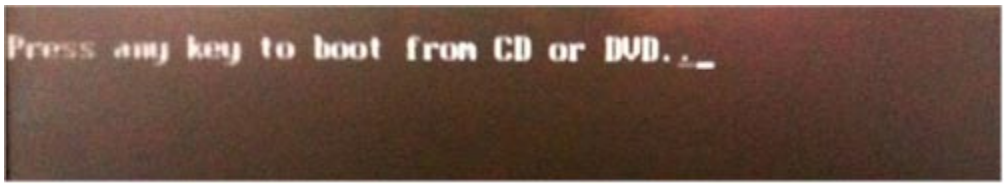

7. This starts the system recovery center. When the main screen comes up select RECOVER My Computer

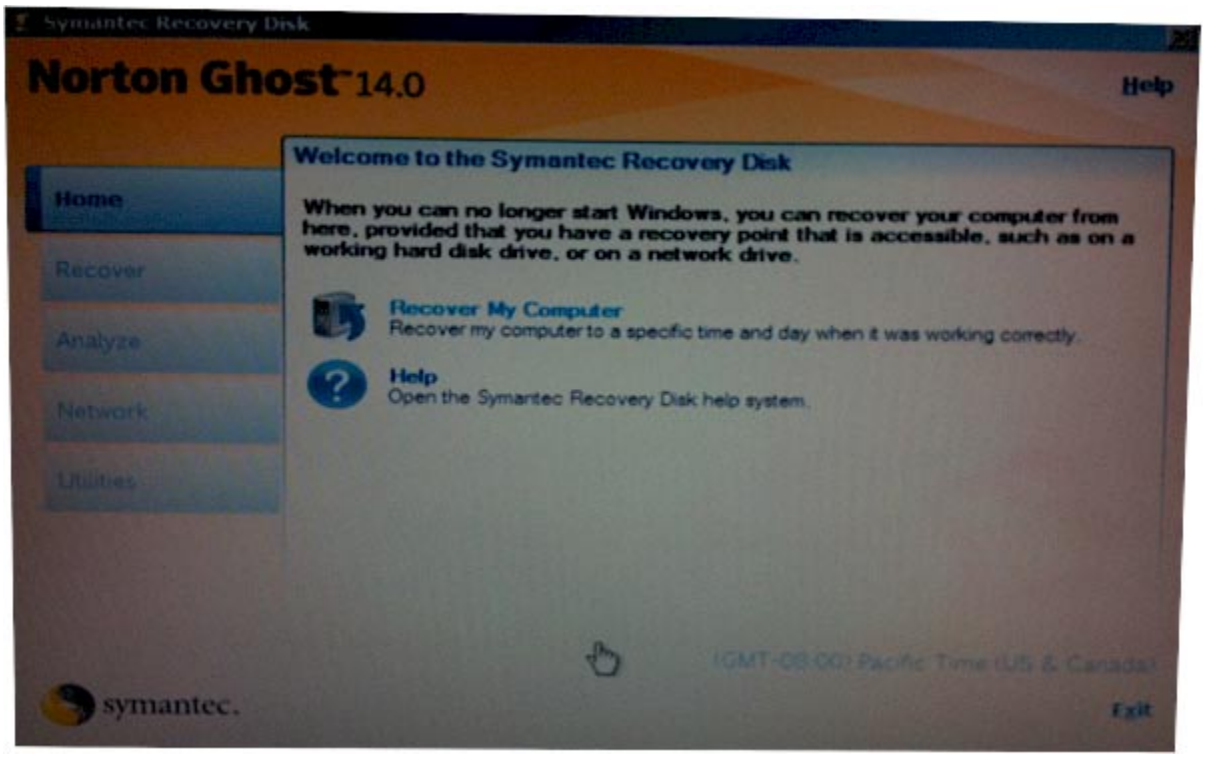
Symantec Recovery Disk
Norton Ghost 14.0
Help
Home
Recover
Analyze
Network
Utilities
Welcome to the Symantec Recovery Disk
When you can no longer start Windows, you can recover your computer from here, provided that you have a recovery point that is accessible, such as on a working hard disk drive, or on a network drive.
Recover My Computer
Recover my computer to a specific time and day when it was working correctly.
Help
Open the Symantec Recovery Disk help system.
(GMT-08:00) Pacific Time (US & Canada)
symantec.
Exit

8. Click NEXT

Recover My Computer Wizard
Welcome to the Recover My Computer Wizard
Use this wizard to recover your system drive, the drive where your operating system is installed (typically, drive C). Or use it to recover a secondary drive, which is any drive other than the system drive.
IMPORTANT: Changes made to the drive after the creation of the recovery point you choose will be lost.
Drive letters under the Symantec Recovery Disk might not match those in the Windows environment.
To continue, click Next.
< Back
Next >
Cancel

9. The System Should find the Image on the Thumb drive and identify it as RECOVERY POINT 4-1-2009 – CLICK NEXT

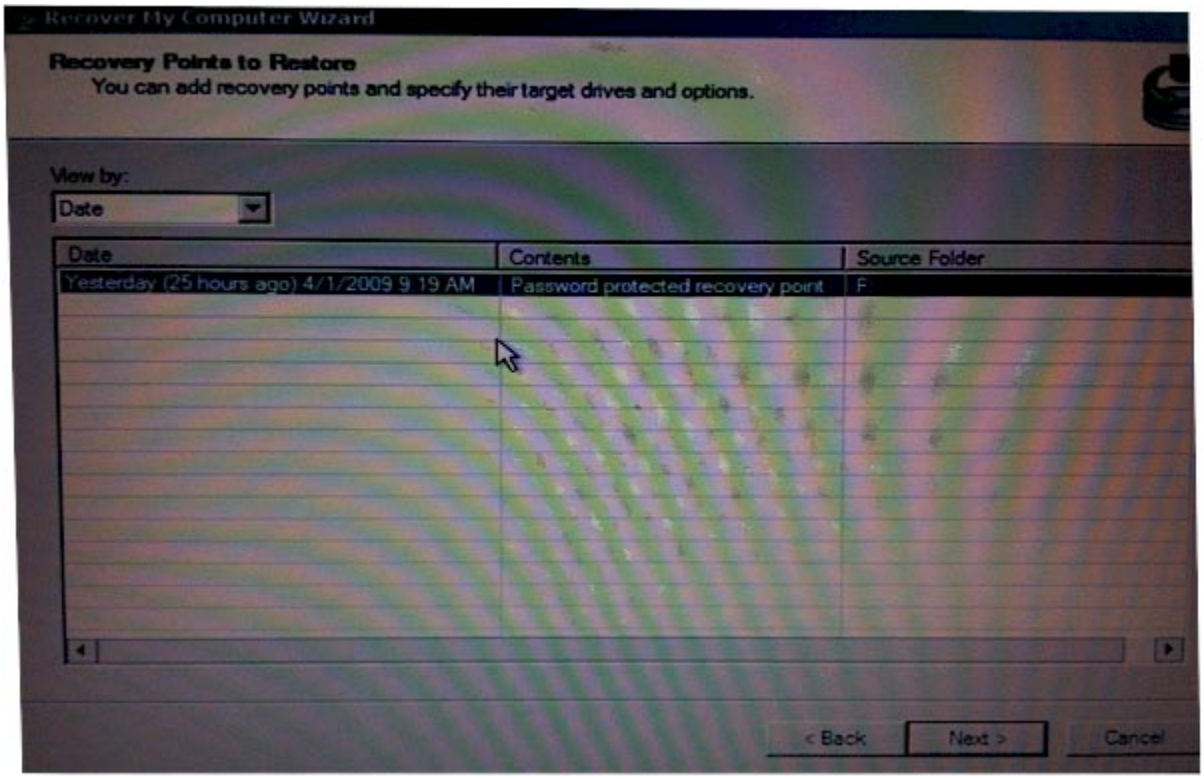

10. This will bring up a password screen. (You will need to call or email us prior to this for this password)

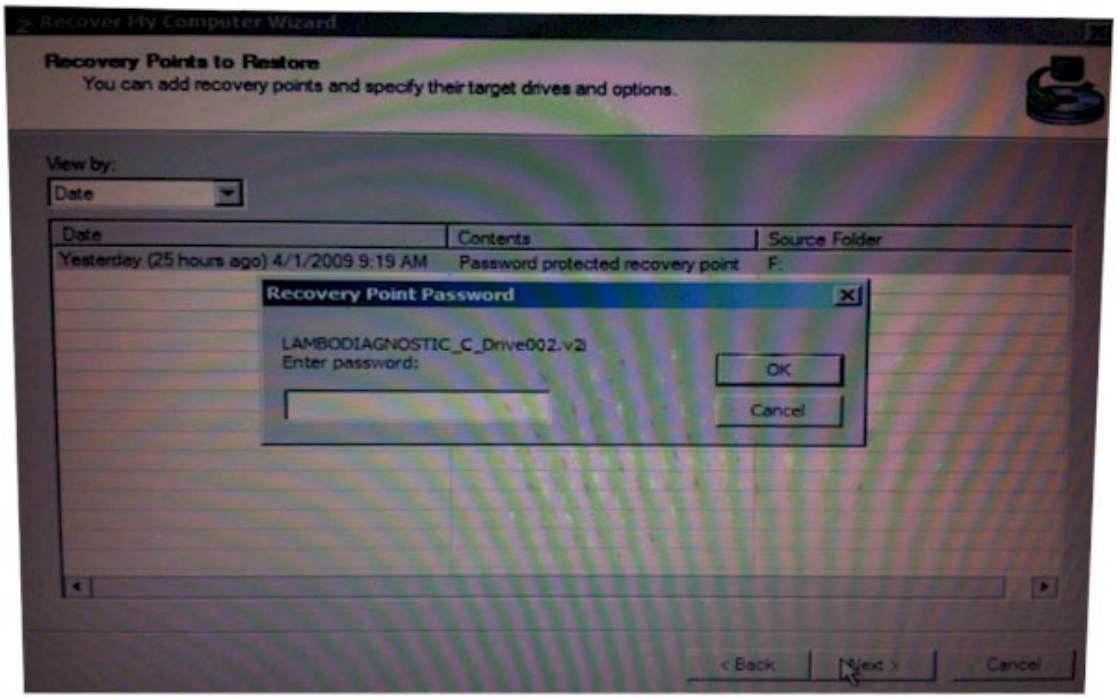

11. We need to make sure the image is correct – CLICK CHANGE

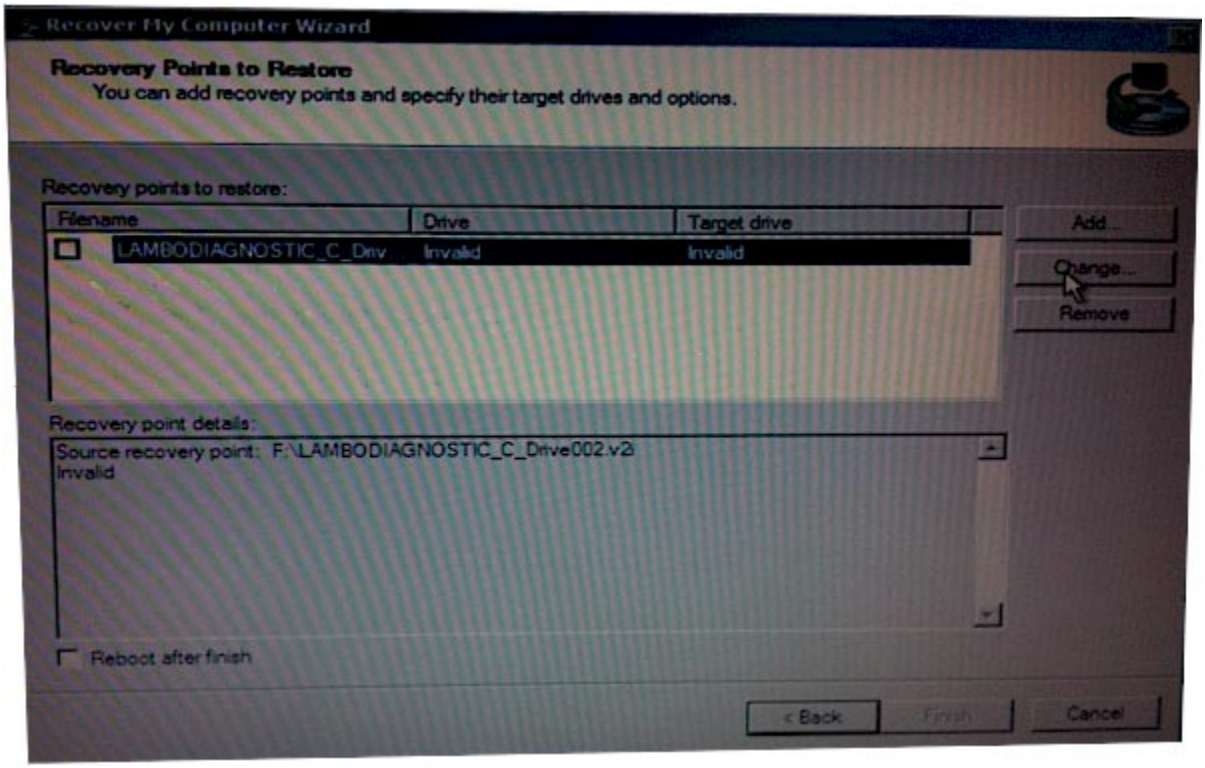

12. CLICK BROWES

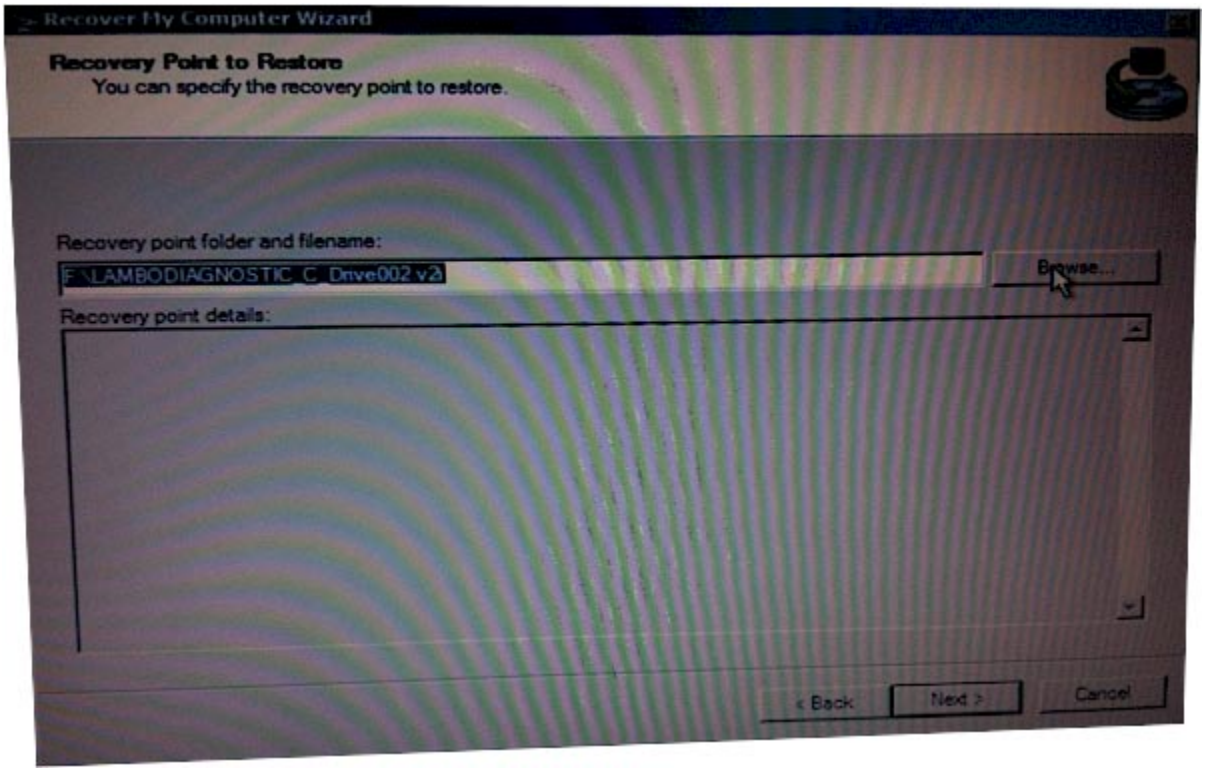

13. Select Computer and Double Click the Icon

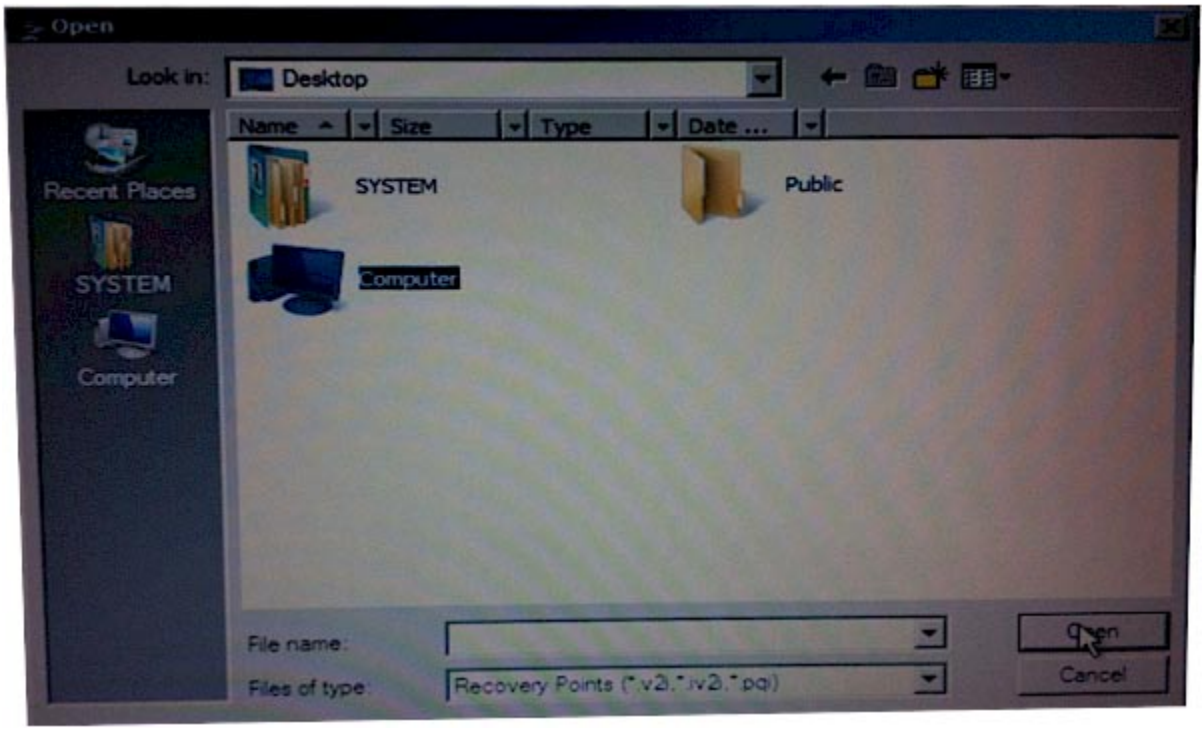

14. Double Click the Removable Drive

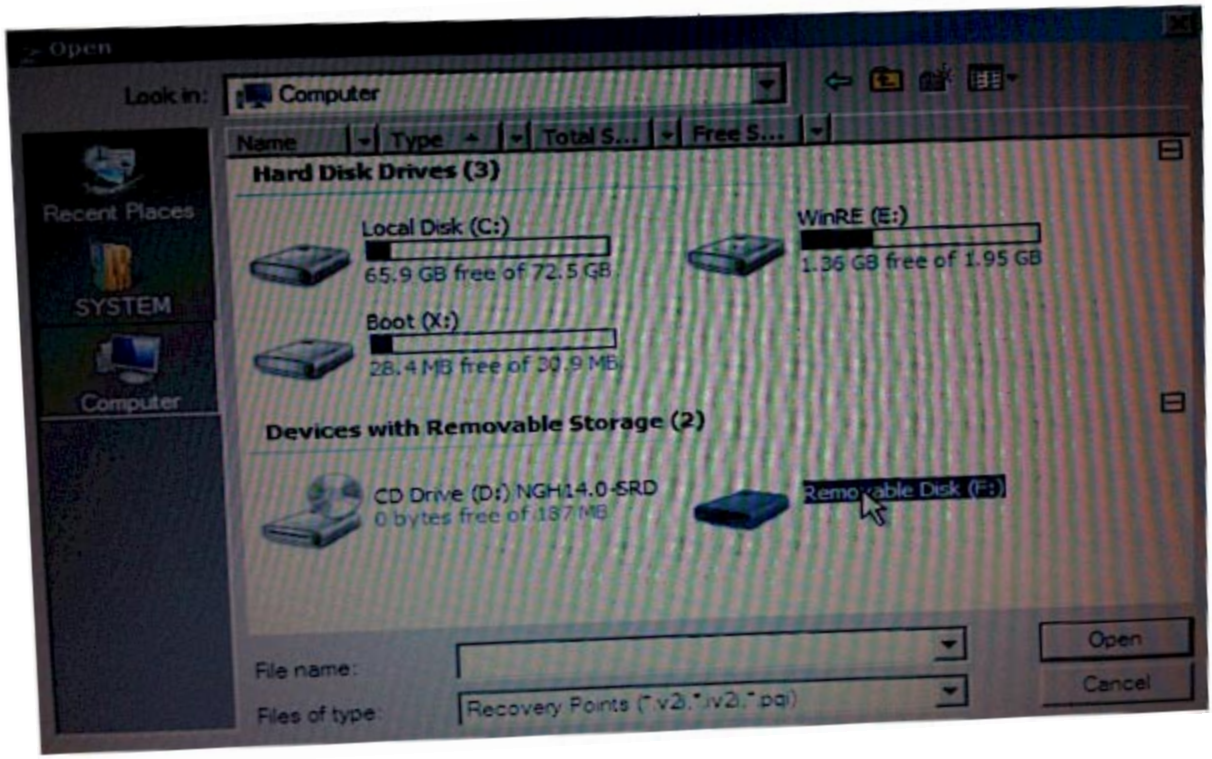

15. Select the LAMBODIAGNOSTIC_CDrive file and click OPEN

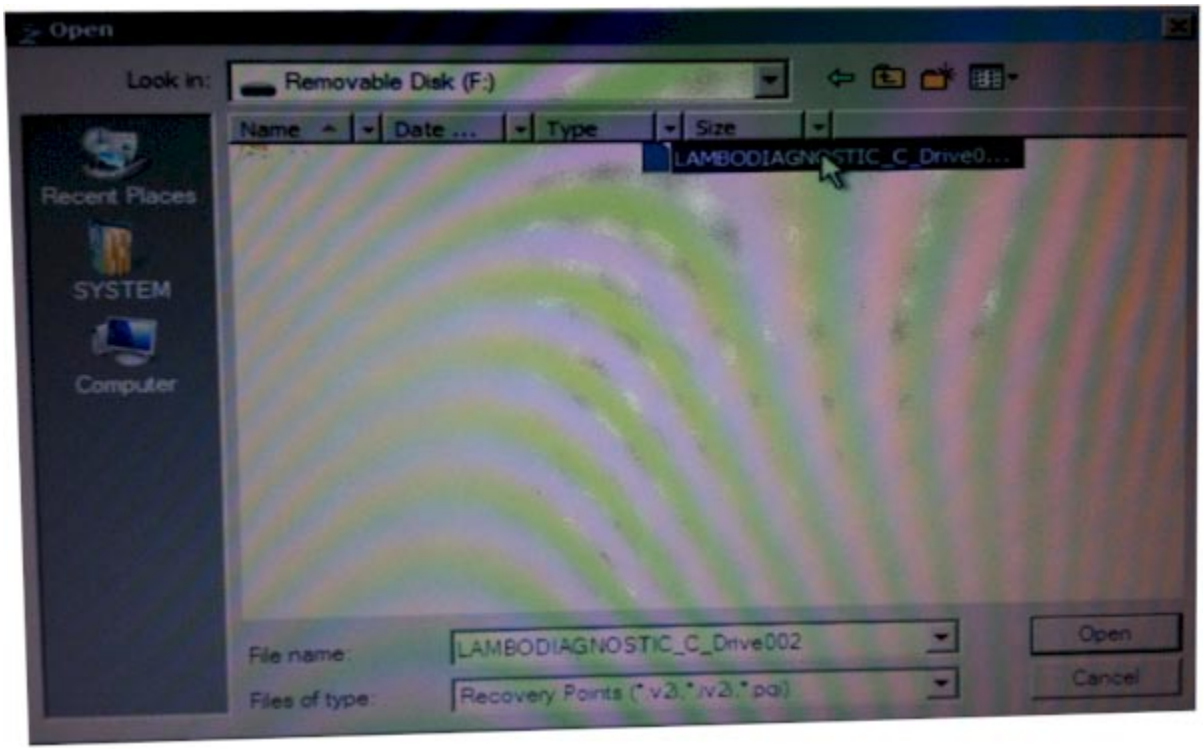

16. Click NEXT

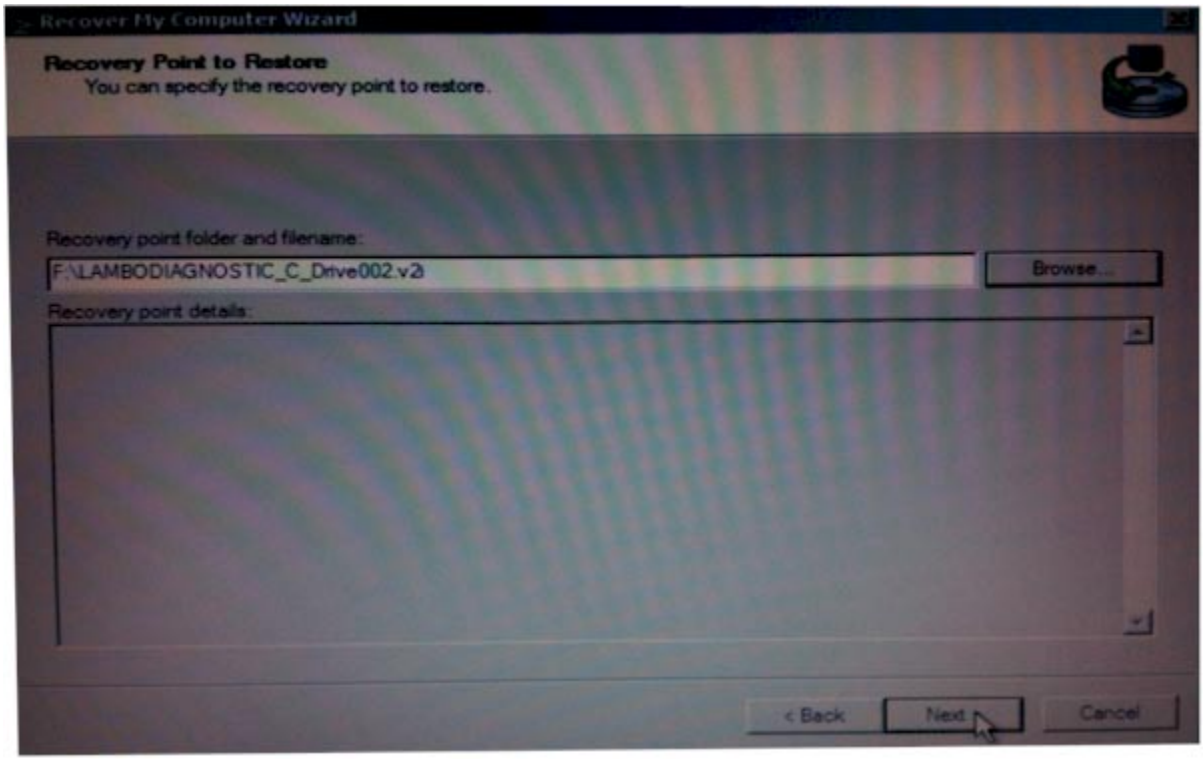

17. This should default to the Largest Drive partition If not select the largest NTFS file system Click NEXT

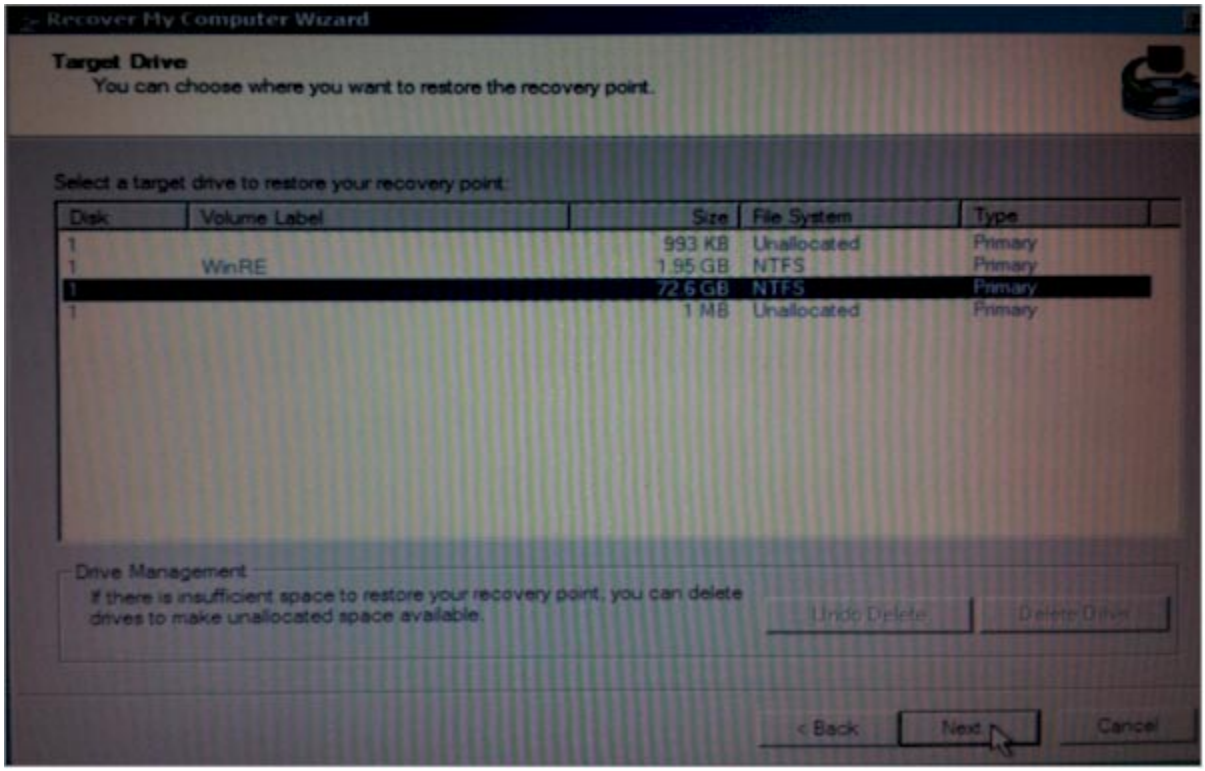

18. Check mark the “Reboot after Finish” and click NEXT

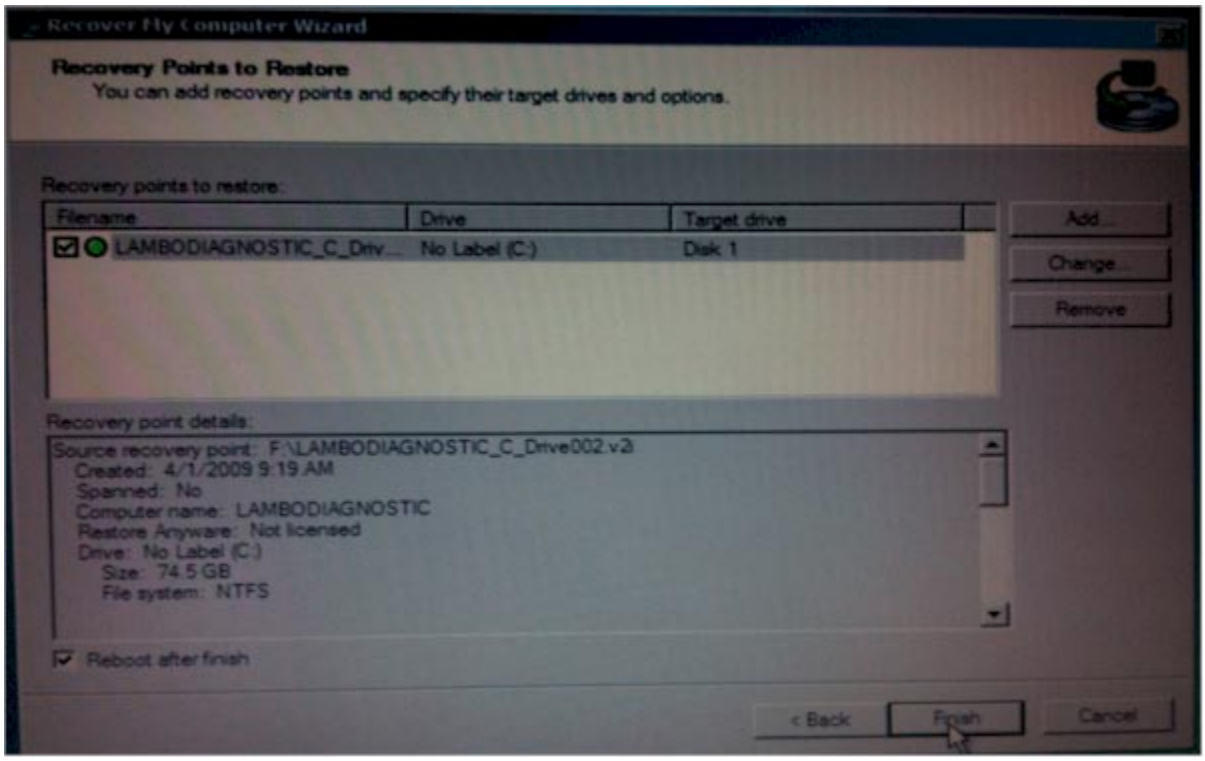

19. Click YES on the warning message

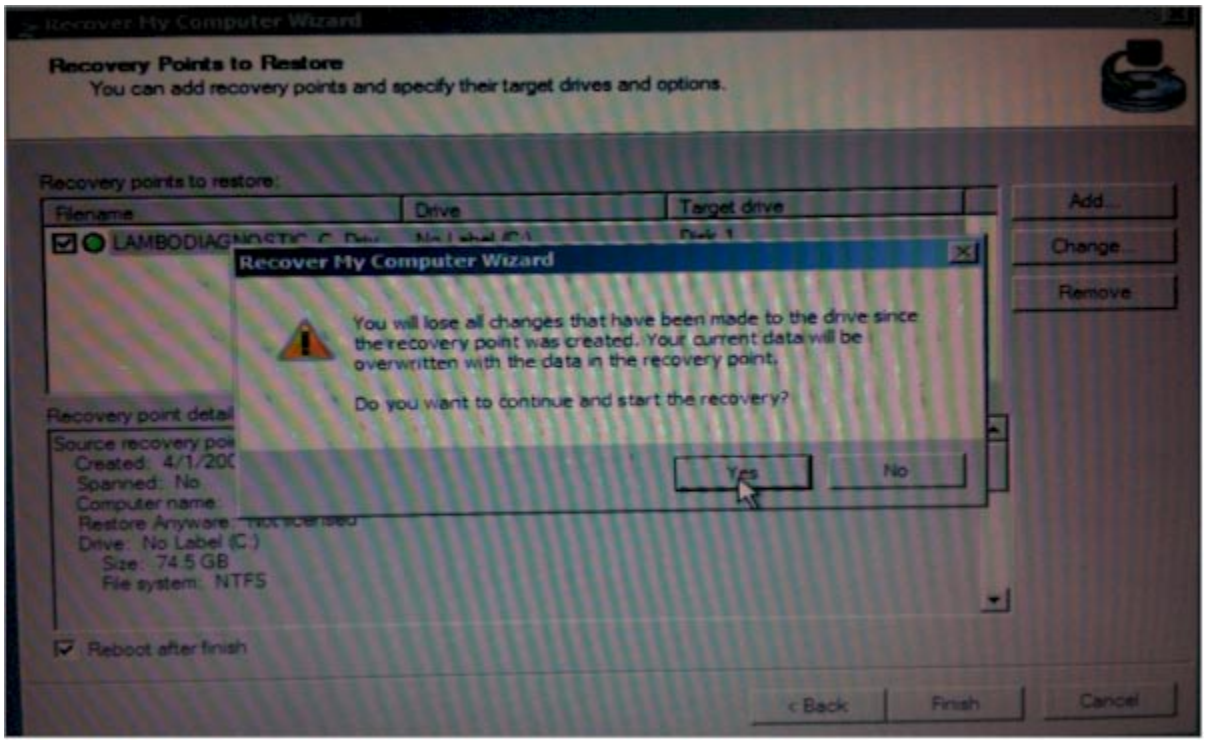

20. This will start the re-image process

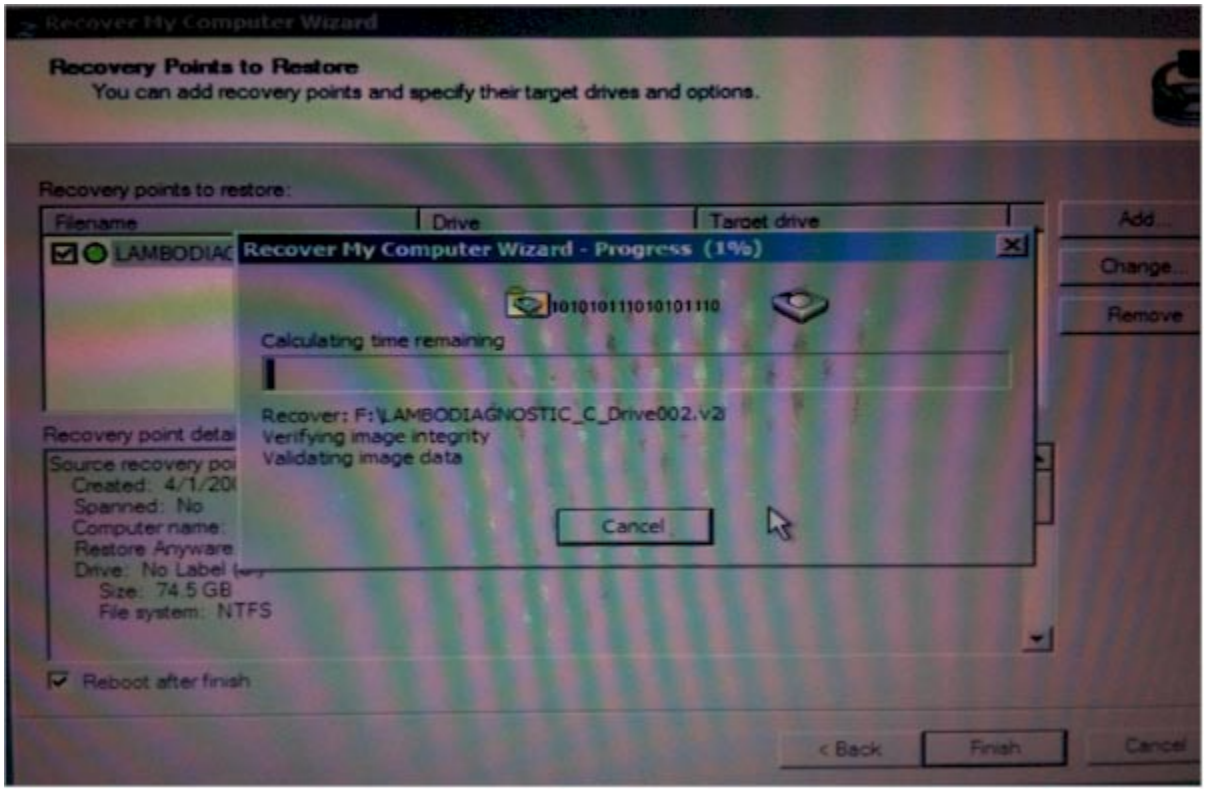

Notes** If anything happens during the restore or if you have any questions, please contact your distributor. Do not ever try to replace any hardware in your system. Until the system Lara-AS hash can be de-coded, NO hardware changes can be made without causing the software to stop functioning. You MUST notify your distributor EVERYTIME you access the image file from the USB Drive. Otherwise we WILL NOT assist you with any technical problems and your system will be void of any and all warranty or support. Your Access hash number, your CPU ID and the number of reported access attempts MUST match.

Model : Spare Parts MURCIELAGO SV LP 670-4 Market: USA MY 2010

Group : 845-WINDOWS

Table : 845.01.00-WINDOWS

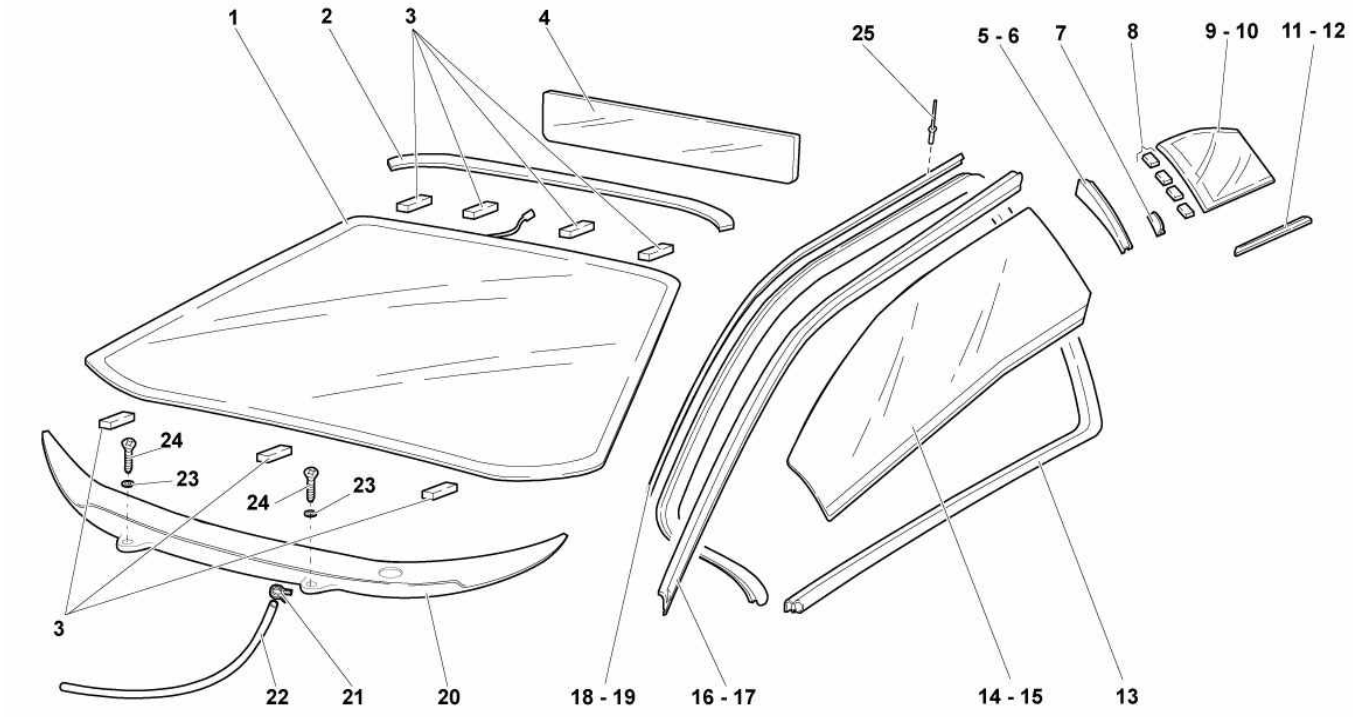

Ref.	Code	Q.ty	Description
1	418845011	1	WINDSCREEN
2	418845121	1	WINDSHIELD UPPER GASKET
3	410845235	8	WINDSHIELD SPACER
4	418845491	1	REAR WINDOW
5	418845145	1	LH MOLDING
6	418845146	1	RH MOLDING
7	418845421	2	BRACKET
8	410845235	8	QUARTER WINDOW GLASS SHIM
9	418845299	1	FIXED REAR LEFT WINDOW GLASS
10	418845300	1	FIXED REAR RIGHT WINDOW GLASS
11	418845149	1	LH MOLDING
12	418845150	1	RH MOLDING
13	418837500B	2	DOOR COMPARTMENT CHANNEL RACE
14	418845202A	1	RIGHT DOOR WINDOW
15	418845201A	1	LEFT DOOR WINDOW
16	418837744	1	RH DOOR UPPER GASKET
17	418837745	1	LH DOOR UPPER GASKET
18	418837630	1	DOOR ANTI-WHISTLE RIGHT FRAME
19	418837629	1	DOOR ANTI-WHISTLE LEFT FRAME
20	417819413	1	COVER
21	400127217	1	CLAMP
22	410805267	1	PIPE
23	N 90531001	2	WASHER
24	WHT001190	2	SCREW M5X12
25	410806224	20	RIVET 3.2X(11-12)

Model : Spare Parts MURCIELAGO SV LP 670-4 Market: USA MY 2010

Group : 955-WINDSHIELD WIPER

Table : 955.01.00-WINDSHIELD WIPER

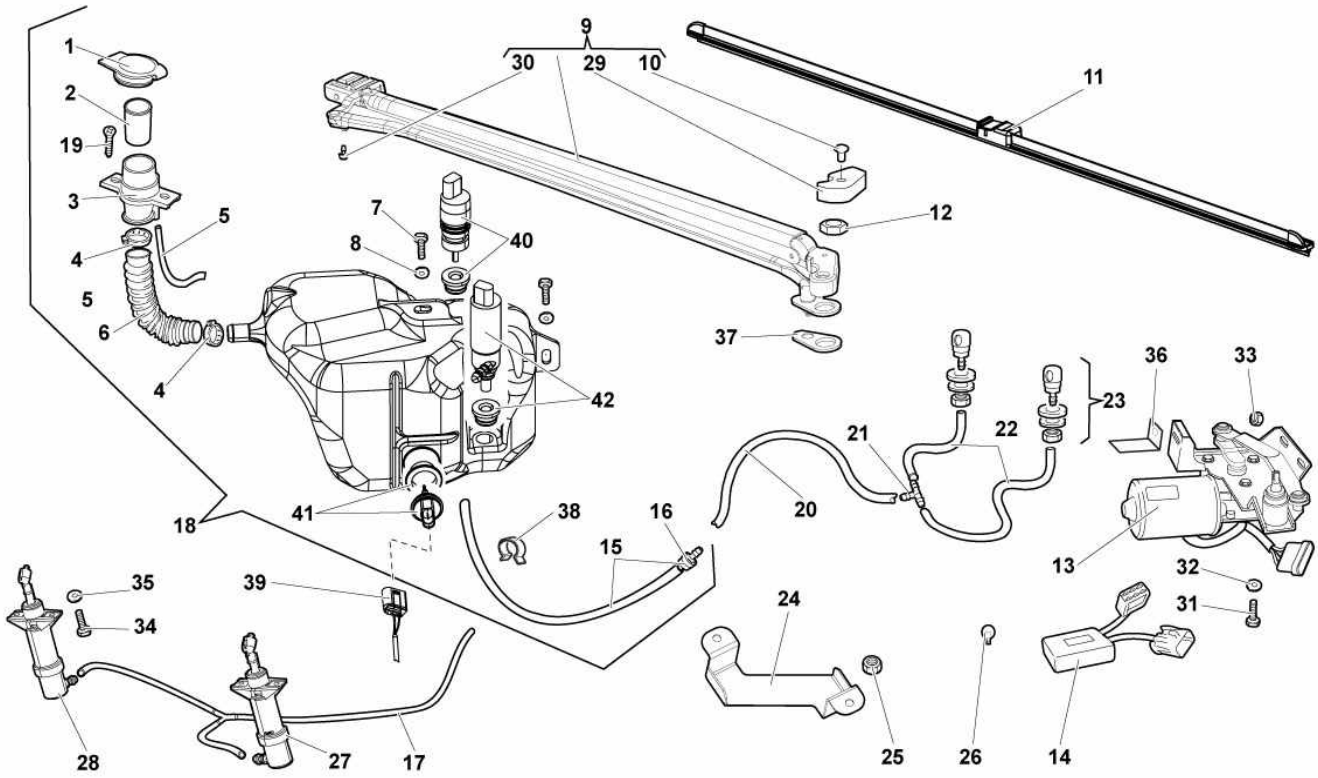

Ref.	Code	Q.ty	Description
1	400955277	1	PLUG
2	8N0955485	1	FILTER
3	400955459	1	HEADLIGHT WIPER/WASHER RESERVOIR PLUG HOLDER
4	400955973	2	CLAMP
5	400955197	1	BREATHER PIPE
6	400955944	1	PIPE
7	N 10718801	2	SCREW M6X16
8	WHT002961	2	WASHER 6.5X18X1.5
9	418955407	1	WIPER ARM ASSEMBLY
10	WHT003302	1	SCREW M4X6
11	418955425B	1	WINDSCREEN WIPER
14	410906015B	1	WINDSCREEN WIPER TIMER
15	400955964	1	PIPE/CHECK VALVE
16	113955975C	1	CHECK VALVE
17	410955175	1	PIPES/CONNECTORS SET FOR HEADLIGHT WASHERS
18	400955448	1	WASHER RESERVOIR ASSEMBLY
19	WHT003563	2	SCREW M6X14
20	410955972	1	PIPE
21	07L133579	1	CONNECTOR
22	410955963	2	PIPE 6X4X80 PVC
23	400955985	2	UGELLO
24	410955931A	1	BRACKET
25	N 01508213	2	NUT M6
26	N 90685101	1	SUPPORT
27	410955985	1	LH HEADLIGHT WASHER ASSEMBLY
28	410955984	1	RH HEADLIGHT WASHER ASSEMBLY
29	413955127	1	COVER
30	417955437	1	PUFFER

Model : Spare Parts MURCIELAGO SV LP 670-4 Market: USA MY 2010

Group : 955-WINDSHIELD WIPER

Table : 955.01.00-WINDSHIELD WIPER

Ref.	Code	Q.ty	Description
31	N 90319404	3	SCREW M6X12
32	WHT002961	3	WASHER
33	N 01508213	2	NUT M6
34	WHT003069	4	SCREW M6X1X20
35	WHT002961	4	WASHER 6,5X18X1,5
36	07L133031	1	BRACKET
37	413819687	1	COVER
38	477971851	2	CLAMP
39	7M0973202	1	CONNECTOR (SEE TABLE 971.01.00 - SEE REF. 1)
40	400955647	1	WIPER PUMP
41	400919375	1	LIQUID LEVEL SENSOR
42	400955649	1	PUMP FOR HEADLIGHT WASHERS

This document was downloaded free from

www.iw1axr.eu/carmanual.htm

Questo documento è stato scaricato gratuitamente da

www.iw1axr.eu/auto.htm