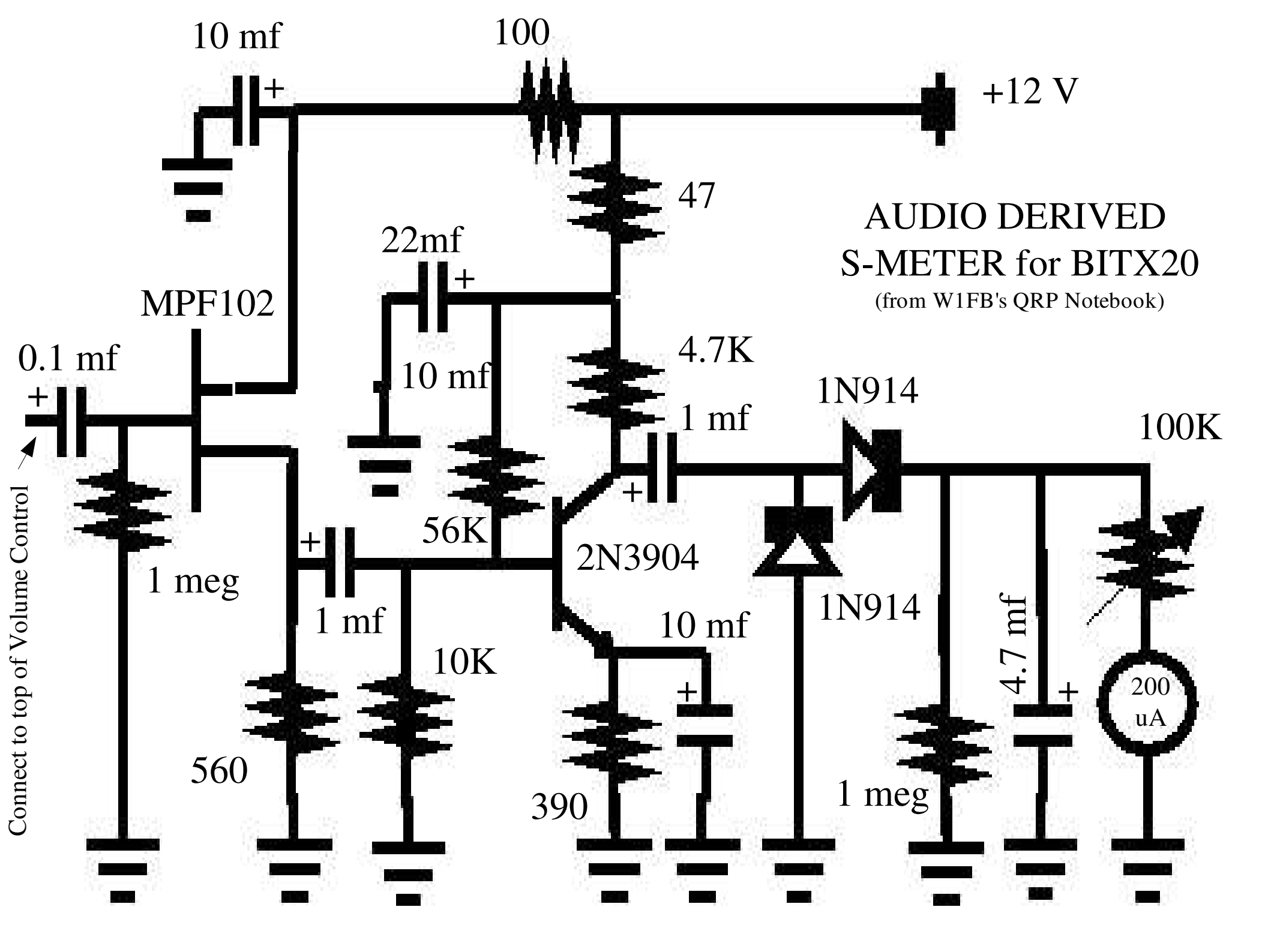
AUDIO DERIVED
S-METER for BITX20
(from W1FB's QRP Notebook)
10 mf
100
+12 V
47
22mf
MPF102
0.1 mf
10 mf
4.7K
1 mf
1N914
100K
56K
2N3904
1 meg
1 mf
10 mf
1N914
10K
4.7 mf
200
uA
560
390
1 meg
Connect to top of Volume Control