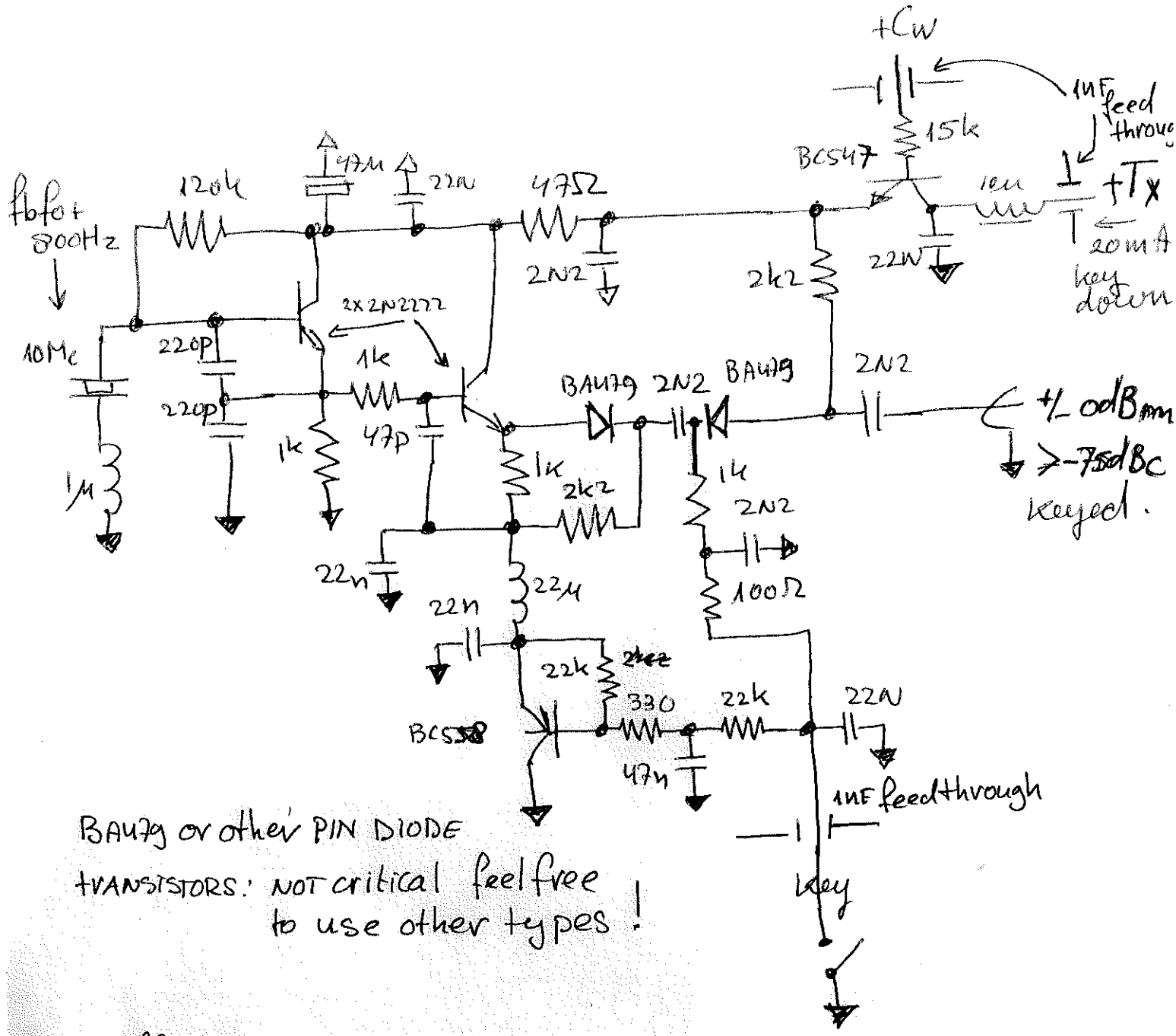

BAW79 or other PIN DIODE TRANSISTORS: NOT critical feel free to use other types!

switch off CW carrier in SSB!
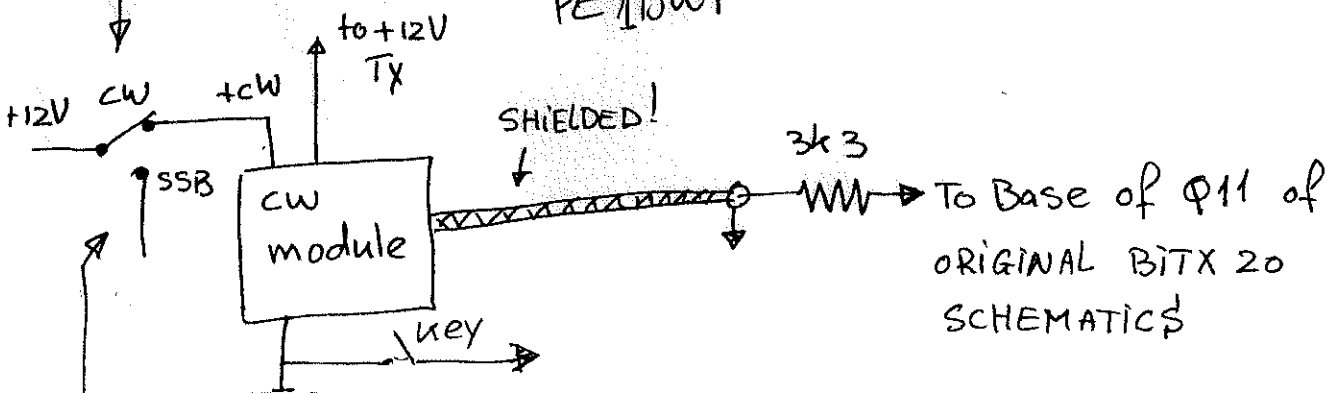
CW module BITX-20
PE1BWI